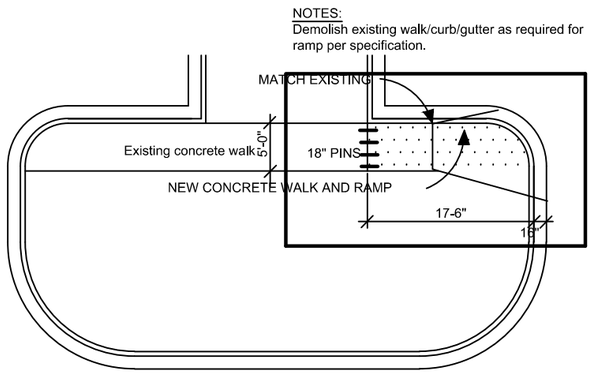

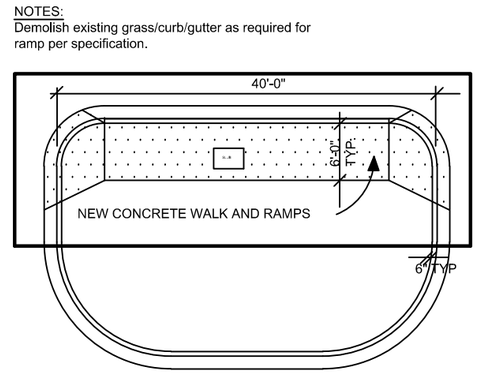

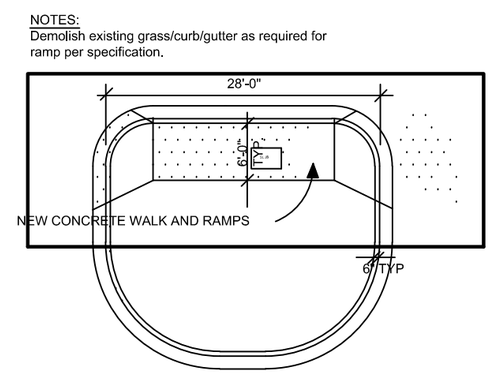

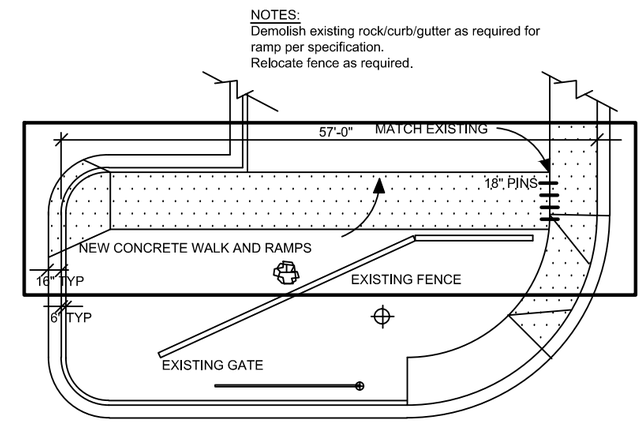

NORTH SIDEWALK AND BUS PULLOUT
575-15-109
EAST ENTRANCE
NEW CONSTRUCTION
Not To Scale