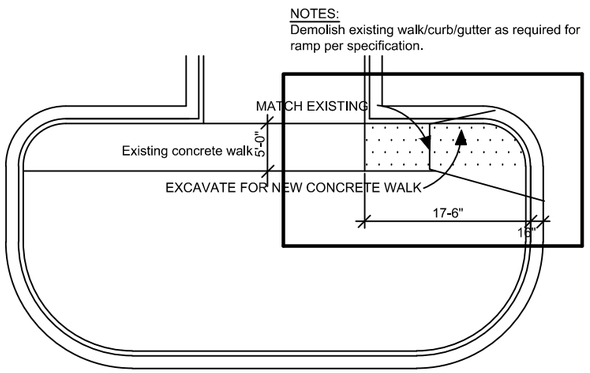

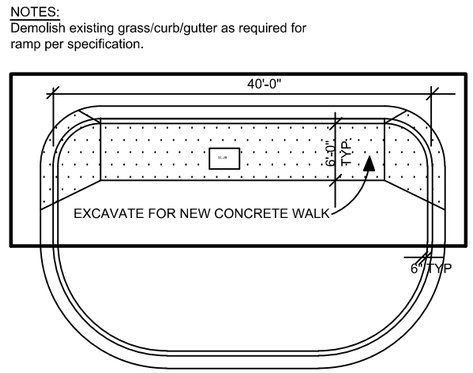

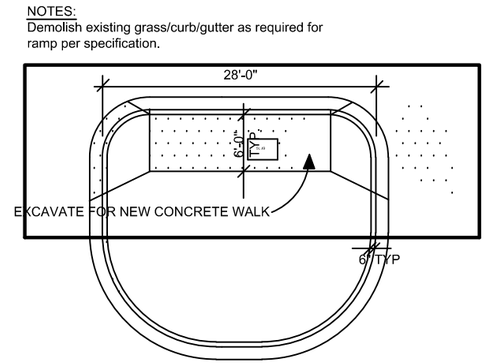

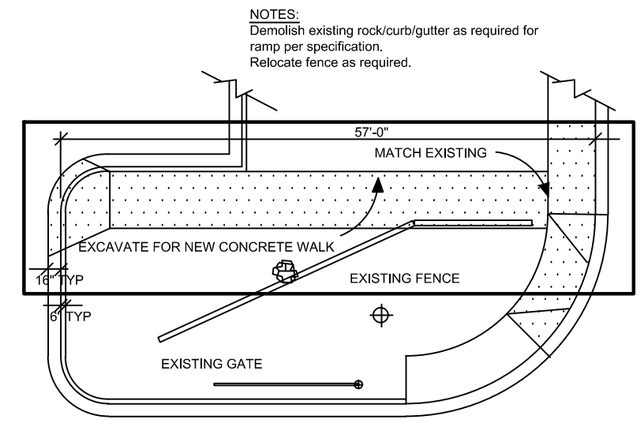

NORTH SIDEWALK AND BUS PULLOUT
575-15-109
EAST ENTRANCE
CONSTRUCTION/DEMOLITION AREAS
Not To Scale