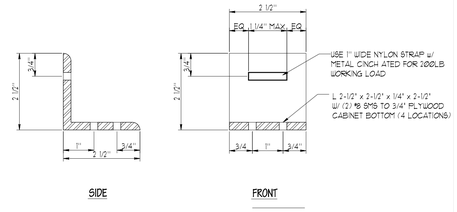

7 / A6.2 NYLON STRAP - CLINCH DETAIL — HALF SCALE

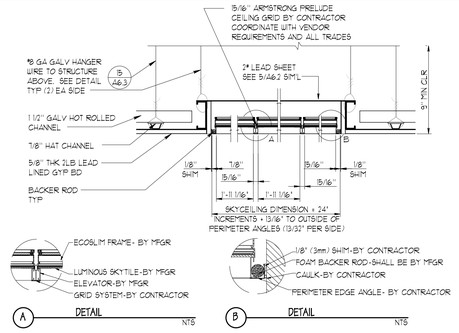

3 / A6.2 SECTION AT SKY CEILING LIGHT - LEAD LINED GYPSUM CEILING — NO SCALE

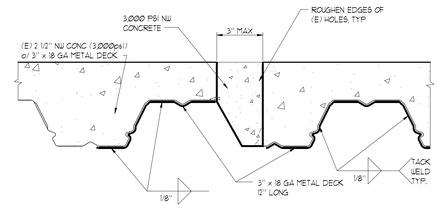

1 / A6.2 HOLE PATCHING — 3" = 1'-0"

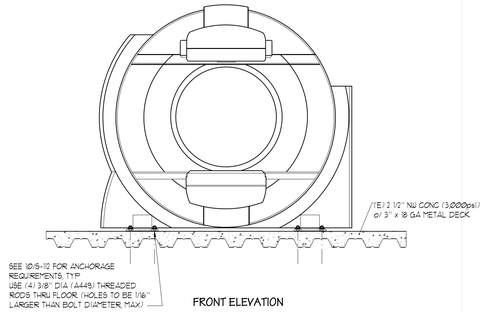

8 / A6.2 SYMBIA T2 & T6 GANTRY — NO SCALE

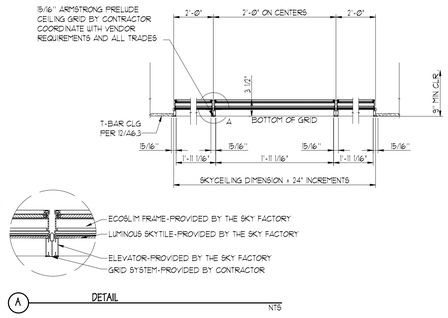

4 / A6.2 SECTION AT SKY CEILING LIGHT - T-BAR CEILING — NO SCALE

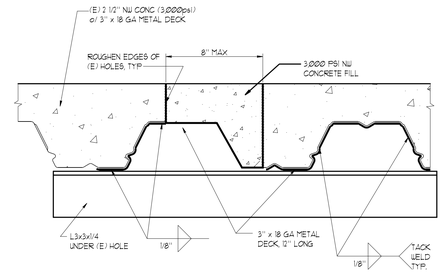

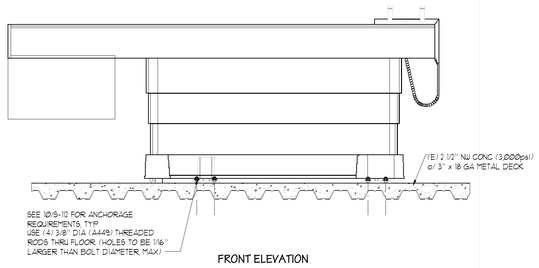

9 / A6.2 SYMBIA T2 & T6 PATIENT TABLE — NO SCALE

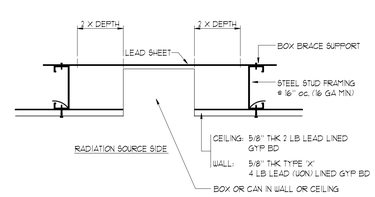

GENERAL NOTES:
1. BOX LOCATIONS TO BE CENTERED BETWEEN THE STUDS
2. THIS DETAIL SIMILAR AT CEILING PENETRATIONS
3. LEAD SHIELING VALUES TO BE THE SAME AS THE ADJACENT WALL PARTITION OR CEILING
4. ALL LEAD SHEETS TO BE 99.9% PURE, MEETING FEDERAL SPC QQ-L-201F 5, GRADE C AND ASTM B749 TYPE LS(D) AND ALL APPLICABLE NCRP REPORTS
6. ALL LEAD LINED GYPSUM BOARD TO MEET ASTM C36 CLASSIFICATION

5 / A6.2 BOX PENETRATION SHIELDING - PARTITION AND CEILING — NO SCALE

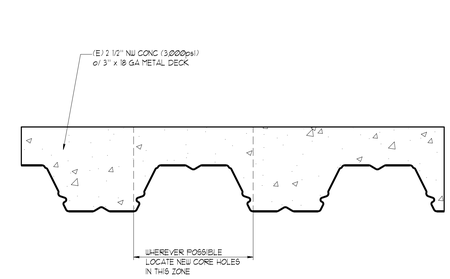

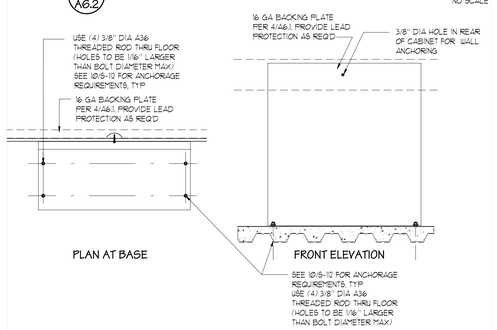

10 / A6.2 LINE CONNECTION BOX — NO SCALE

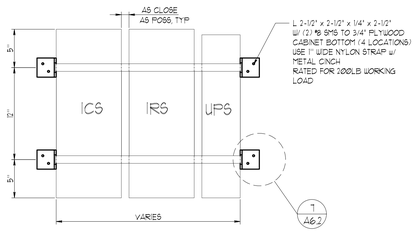

6 / A6.2 NYLON STRAP - CLINCH DETAIL — NO SCALE

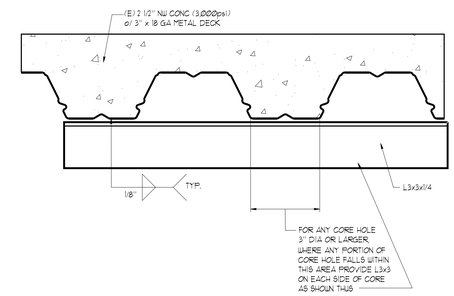

2 / A6.2 NEW FLOOR CORING — 3" = 1'-0"

100% CONSTRUCTION DOCUMENTS

Revisions:	Date

CONSULTANTS:

ARCHITECT/ENGINEERS: HFP JOB #04-14

LICENSED ARCHITECT ERIK N. PEDERSEN C-24113 REN. 11/30/15 STATE OF CALIFORNIA

hfp architects
209 w. alamar ave
santa barbara, ca 93105
805-969-6887 fax: 805-969-6888

Drawing Title: DETAILS - EQUIPMENT	Project Title: CT SCANNER PREP VA NORTHERN CALIFORNIA HEALTHCARE SYSTEM		Project Number: 612-14-037
Approved: Project Director			Building Number: 19
	Location: MARTINEZ, CA		Drawing Number: A6.2
	Date: 06/26/2015	Checked: NV	Drawn: NV
			Dwg. of 42

Office of Construction and Facilities Management

Department of Veterans Affairs

VA FORM 08-6231

M:_Project Files\VA Martinez\Project Files\14-14 CT Scanner Prep\Correspondence\Client\Martinez CT Scan CD NFE 06.17.2015\Drawings\A6.2 EQP-DETS.dwg 6-26-15 01:44:50 PM Nancy