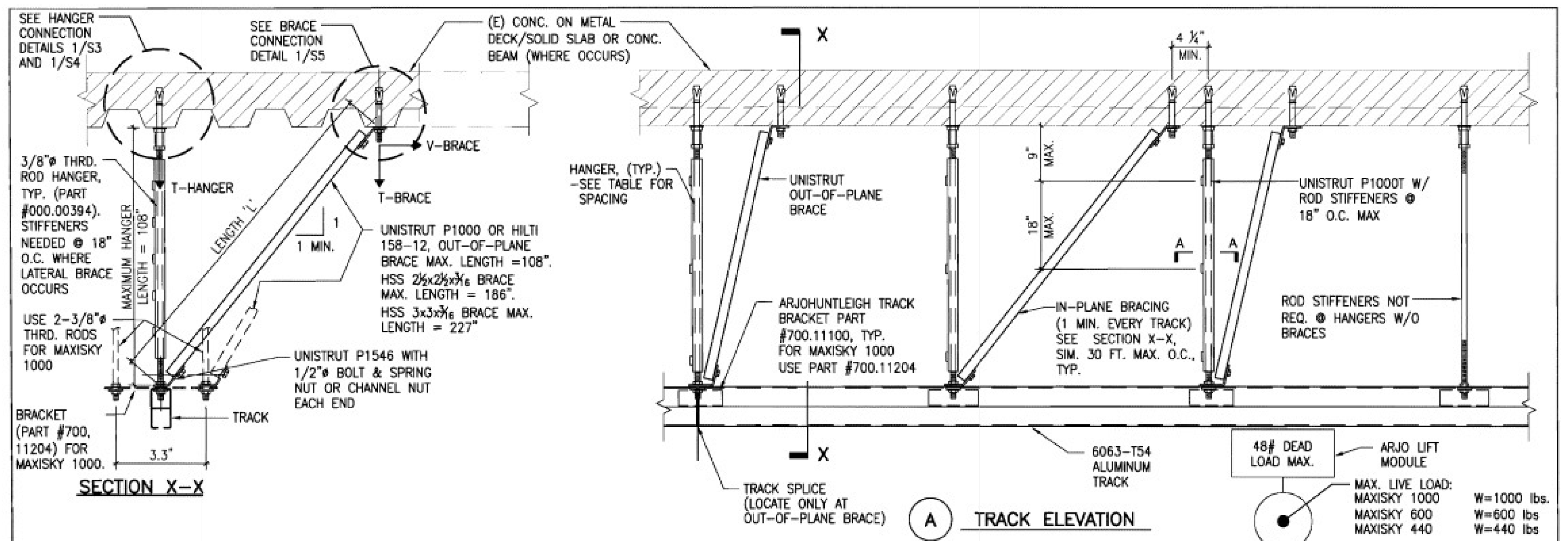

STRUCTURAL LOADING (lbs.) (ASD LOADING)			
	LIFT TYPE		
	Portable 440	600	1000
T_{hanger}	605	814	1307
T_{brace}	249	249	281
V_{brace}	249	249	281
Weight Lbs	14	28	48
Capacity Lbs	440	600	1000

* LOADS DO NOT INCLUDE 1.3 INCREASE FOR ANCHORS

Track Properties – For Reference Only			
	Track Type		
	H90	H140	H180
A (in.²)	1.73	2.88	3.56
Sx (in.²)	1.19	2.75	4.40
Ix (in. ⁴)	2.11	7.84	15.85
Weight (lb/ft)	2.07	3.43	4.25

MAXIMUM HANGER SPACING (inch)				
		LIFT TYPE		
		Portable 440	600	1000
TRACK	H90	74	64	39
	H140	143	123	98
	H180	170	170	139

Max. Transverse Brace Spacing = 2X max. hanger spacing

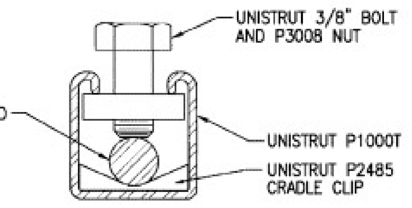

SECTION A–A

SHEET NOTES:
1. THE STRUCTURAL ENGINEER OF RECORD IS RESPONSIBLE FOR VERIFYING THE ADEQUACY OF THE STRUCTURE FOR APPLIED LOADS INDICATED HEREIN, IN ADDITION TO ALL OTHER LOADS.

1 TRACK ELEVATION & DETAILS
N.T.S.

Degenkolb
DEGENKOLB ENGINEERS
235 Montgomery Street, Suite 500
San Francisco, CA 94104
415.392.6952 Phone
415.981.3157 Fax
www.degenkolb.com

REGISTERED PROFESSIONAL ENGINEER RAYMOND S. PUGLIESI No. 3968 EXP. 3/31/12 STRUCTURAL STATE OF CALIFORNIA

APPROVED
Fixed Equipment Anchorage
Office of Statewide Health Planning and Development
OPA-0611-07
Pre-approval Program Manager Anthony R. Pike (916) 440-8470
Reviewed By George C. Chu 4/19/2010 Date

ARJOHUNTLEIGH MAXISKY CEILING LIFTS
Title: TRACK ELEVATION
Sheet Number: S2
Drawn: RP Job Number: A5114009.02
Design: RMG Rev.: 2.1
Check: RSP
Date: 4/13/10
2 OF 5 Sheets

- ALL HARDWARE INCLUDED. (ACCORDING TO STRUCTURE)

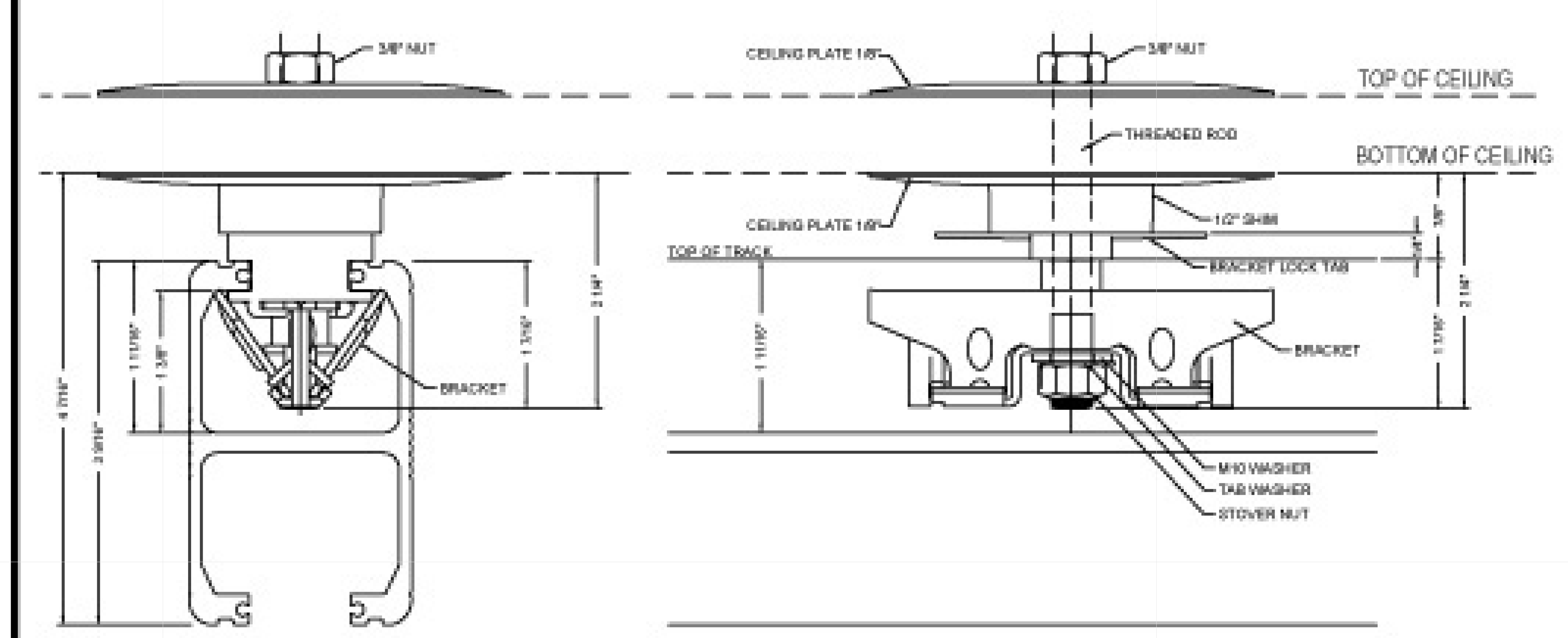

QUANTITY OF ROOMS: Z
LISTING OF ROOM NUMBER(S):

BRACKET DETAIL

SAFE WORKING LOAD BELOW LIFT: 600LBS [272KG]
MINIMUM STRUCTURE CAPACITY: 750LBS [340KG]

DATE CREATED (DD-MMM-YYYY): 29-APR-2014
DRAWN BY: usaddpej03 SCALE: 6" = 1'
REFERENCE #: EXAMPLE PAGE: 1 / 1

THIS LAYOUT HAS BEEN PREPARED WITH SUPPLIED DATA.
NOTE: CUTTING OF RAILS ON SITE ONLY
ARJOHUNTLEIGH

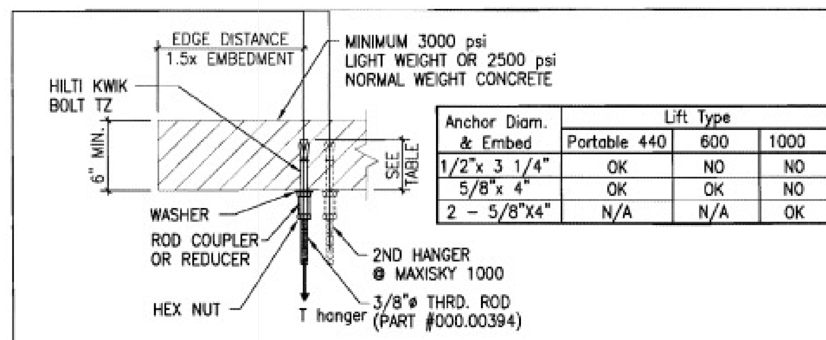

Anchor Diam. & Embed	Lift Type		
	Portable 440	600	1000
1/2"x 3 1/4"	OK	NO	NO
5/8"x 4"	OK	OK	NO
2 – 5/8"X4"	N/A	N/A	OK

A SOLID CONCRETE SLAB CONSTRUCTION

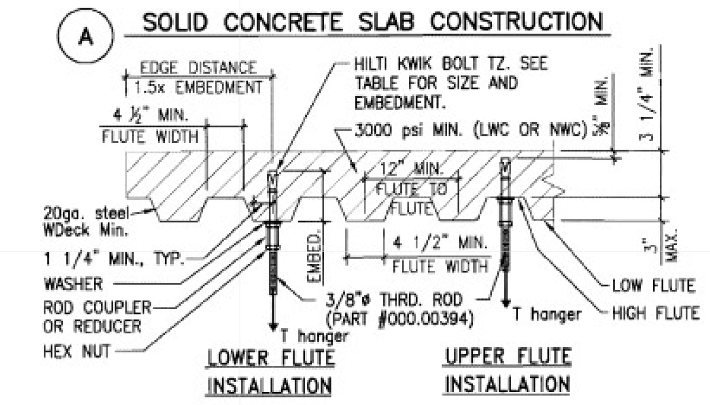

NOTES:
1. SEE DETAIL D/– FOR FLUTE DIMENSION REQUIREMENTS.
2. INSTALL IN HIGH OR LOW FLUTE.

Anchor Diam. & Embed	Lift Type		
	Portable 440	600	1000
1/2"x 3 1/4"	OK	NO	N/A
5/8"x 4"	OK	OK	N/A

B METAL DECK WITH CONC. FILL CONSTRUCTION

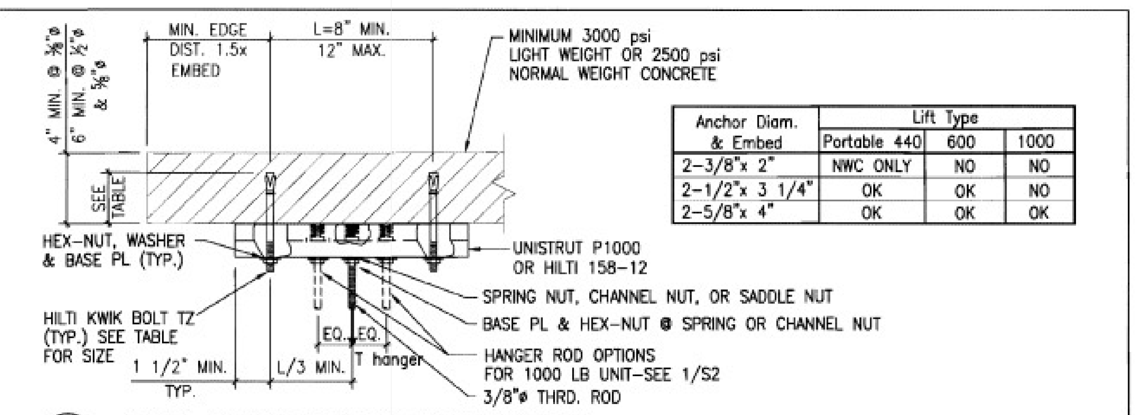

Anchor Diam. & Embed	Lift Type		
	Portable 440	600	1000
2-3/8"x 2"	NWC ONLY	NO	NO
2-1/2"x 3 1/4"	OK	OK	NO
2-5/8"x 4"	OK	OK	OK

C SOLID CONCRETE SLAB CONSTRUCTION

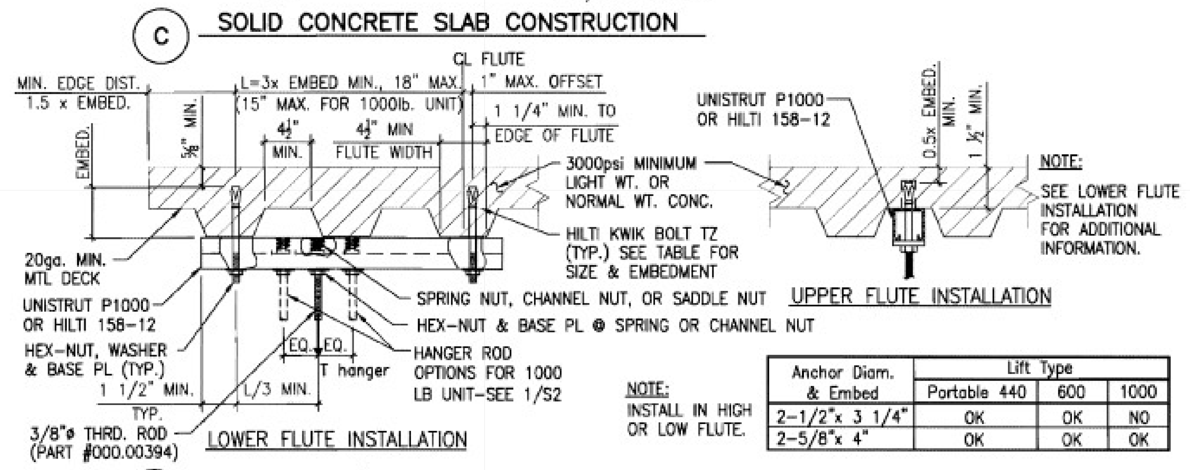

NOTE: INSTALL IN HIGH OR LOW FLUTE.

Anchor Diam. & Embed	Lift Type		
	Portable 440	600	1000
2-1/2"x 3 1/4"	OK	OK	NO
2-5/8"x 4"	OK	OK	OK

D MTL DECK W/ CONC. FILL CONSTRUCTION

SHEET NOTES:
1. THE STRUCTURAL ENGINEER OF RECORD IS RESPONSIBLE FOR VERIFYING THE ADEQUACY OF THE STRUCTURE FOR APPLIED LOADS INDICATED HEREIN, IN ADDITION TO ALL OTHER LOADS. SEE DETAIL 1/S2 FOR STRUCTURAL LOADING.
2. THESE DETAILS ARE NOT USED WITH DIAGONAL BRACING MEMBERS, BUT MAY BE USED FOR VERTICAL HANGERS BRACED AT LOWER END (PER 1A/S2, SECTION X-X) OR FOR UNBRACED HANGERS.

1 HANGER CONNECTION DETAILS
N.T.S.

Degenkolb
DEGENKOLB ENGINEERS
235 Montgomery Street, Suite 500
San Francisco, CA 94104
415.392.6952 Phone
415.981.3157 Fax
www.degenkolb.com

REGISTERED PROFESSIONAL ENGINEER RAYMOND S. PUGLIESI No. 3968 EXP. 3/31/12 STRUCTURAL STATE OF CALIFORNIA

APPROVED
Fixed Equipment Anchorage
Office of Statewide Health Planning and Development
OPA-0611-07
Reviewed By George C. Chu 4/19/2010 Date

ARJOHUNTLEIGH MAXISKY CEILING LIFTS
Title: HANGER CONNECTION DETAILS
Sheet Number: S3
Drawn: RP Job Number: A5114009.02
Design: RMG Rev.: 2.1
Check: RSP
Date: 4/13/10
3 OF 5 Sheets

GENERAL NOTES

I. GENERAL
1. THIS PRE-APPROVAL IS VALID FOR THE EQUIPMENT DESCRIBED IN THESE DRAWINGS THROUGHOUT THE STATE OF CALIFORNIA, AND IS VALID FOR EQUIPMENT INSTALLED AT ANY HEIGHT WITHIN THE BUILDING.

II. RESPONSIBILITIES OF THE STRUCTURAL ENGINEER OF RECORD
1. VERIFY MATERIALS AND WORKMANSHIP TO CONFORM WITH THE 2007 EDITION OF THE CALIFORNIA BUILDING CODE AND THE REQUIREMENTS OF THIS PRE-APPROVAL DOCUMENT.
2. VERIFY THE ADEQUACY OF THE EXISTING FRAMING TO SUPPORT THE LOADS INDICATED HEREIN, IN ADDITION TO ALL OTHER LOADS.
3. VERIFY CONCRETE SLAB IS NOT CRACKED.
4. VERIFY ANCHORS ARE ADEQUATE DISTANCES FROM OPENINGS AND EDGES OF SLABS.
5. VERIFY ANCHORS ARE ADEQUATE DISTANCES FROM NEW OR EXISTING ANCHORS.
6. DESIGN ANY SUPPLEMENTARY MEMBER AND THEIR ATTACHMENTS OTHER THAN THOSE DETAILED WITHIN THIS PRE-APPROVAL.
7. VERIFY THE EQUIPMENTS WEIGHT, C.G. LOCATION. ANCHOR LOCATIONS AND ANCHOR DETAILS AGREE WITH THE INFORMATION SHOWN IN THIS PRE-APPROVAL.

III. STRUT FRAMING
1. CHANNEL FRAMING COMPONENTS AND CONNECTORS MANUFACTURED BY UNISTRUT CORPORATION, UNLESS OTHERWISE INDICATED ON THE DRAWINGS.
2. CHANNEL FRAMING TO CONFORM TO ASTM A1011, GRADE 33.
3. INSTALL BRACING WITH NO MORE THAN 10 DEGREE PLAN DEVIATION.

IV. MECHANICAL ANCHORS
1. WEDGE ANCHORS INTO CONCRETE: USE ZINC PLATED CARBON STEEL HILTI KB-TZ (ICC ESR-1917). INSTALL ANCHORS IN ACCORDANCE WITH ICC REPORT AND OSHPD CAN 2-1912A.1 & CAN 2-1916A.8
2. IF REINFORCEMENT IS ENCOUNTERED DURING DRILLING, ABANDON AND SHIFT THE HOLE LOCATION TO AVOID THE REINFORCEMENT. PROVIDE A MINIMUM OF 2 ANCHOR DIAMETERS OR 1 INCH, WHICHEVER IS LARGER, OF SOUND CONCRETE BETWEEN THE DOWEL AND THE ABANDONED HOLE. FILL THE ABANDONED HOLE WITH NON-SHRINK GROUT APPROVED BY THE ENGINEER OF RECORD. NOTIFY THE ENGINEER OF RECORD IF ANY REINFORCING IS DAMAGED.
3. ANCHORS WILL BE PROOF-TESTED BY OWNER'S TESTING AND INSPECTION AGENCY.
4. IF ANY ANCHOR FAILS TESTING, REPLACE ANCHOR AND TEST ADDITIONAL ANCHORS OF THE SAME CATEGORY NOT PREVIOUSLY TESTED UNTIL TWENTY (20) CONSECUTIVE PASS, THEN RESUME INITIAL TESTING FREQUENCY.
5. TEST ANCHORS NO SOONER THAN 24 HOURS AFTER INSTALLATION.
6. TEST 50% WEDGE ANCHORS PER THE FOLLOWING METHOD:
   A. TORQUE WRENCH METHOD: TEST ANCHORS TO THE TORQUE LOAD INDICATED IN THE TABLE BELOW WITHIN THE FOLLOWING LIMITS:
      1. ONE-HALF TURN OF THE NUT.

WEDGE	
ANCHOR DIA. (IN)	TORQUE LOAD (FT-LBS)
3/8	25
1/2	40
5/8	60

V. ROUGH CARPENTRY
1. FRAMING LUMBER: DOUGLAS FIR (COAST REGION) GRADED AND MARKED IN ACCORDANCE WITH THE STANDARD GRADING RULES NO. 17 OF THE WEST COAST LUMBER INSPECTION BUREAU (W.C.L.I.B.) OR WESTERN LUMBER GRADING RULES, OF THE WESTERN WOOD PRODUCTS ASSOCIATION (W.W.P.A.). USE LUMBER WITH A MINIMUM GRADE OF D.F. #1.
2. ROUGH HARDWARE:
   A. NAILS: COMMON WIRE NAILS, FEDERAL SPECIFICATION FF-N-105B, STANDARD LENGTHS U.O.N. USE HOT-DIPPED ZINC-COATED GALVANIZED NAILS FOR EXTERIOR INSTALLATIONS AND WHEN PENETRATING PRESSURE TREATED OR FIRE-RETARDANT LUMBER.
   B. BOLTS AND THREADED RODS: ASTM A307, SQUARE OR HEXAGONAL HEAD MACHINE BOLTS WITH ASTM A563 NUTS. USE MALLEABLE IRON WASHERS UNDER HEAD AND NUT WHEN IN CONTACT WITH WOOD.
   C. LAG SCREWS: ASTM A307, ANSI/ASME STANDARD B18.2.1. USE ANSI B18.22.1 WASHERS UNDER HEAD WHEN IN CONTACT WITH WOOD.
   D. SCREWS: ASTM A307, ANSI/ASME STANDARD B18.6.1. USE CADMIUM-PLATED PAN OR ROUND HEADED SCREWS AT STEEL TO WOOD AND WOOD TO WOOD CONNECTIONS.
   E. MISCELLANEOUS STEEL: ASTM A36.
   F. FRAMING CLIPS, SHEET METAL STRAPS, ETC.: SIMPSON, UNIVERSAL, OR SILVER, WITH ICC REPORTS. DESIGNATIONS ON DRAWINGS ARE BASED ON SIMPSON CATALOGUE NUMBERS.
3. BOLT INSTALLATION:
   A. DRILL BOLT HOLES A MAXIMUM OF 1/16 INCH LARGER IN DIAMETER THAN THE BOLT NOMINAL DIAMETER.
   B. DRILL PRE-BORED LEAD HOLES FOR LAG SCREWS AS FOLLOWS.
      1. DRILL LEAD HOLE FOR THE SHANK TO A DEPTH EQUAL TO THE LENGTH OF THE UNTHREADED PORTION IN THE MAIN MEMBER. USE A DRILL BIT OF THE SAME DIAMETER AS THE LAG SCREW.
      2. EXTEND THE LEAD HOLE FOR THE THREADED PORTION OF THE LAG SCREW WITH A DRILL BIT WHOSE DIAMETER IS 60 PERCENT OF THE NOMINAL LAG SCREW DIAMETER.
      3. INSERT LAG SCREW INTO LEAD HOLE BY TURNING. DO NOT DRIVE WITH A HAMMER.
      4. LUBRICATE WITH SOAP OR BEESWAX TO FACILITATE INSTALLATION.

VI. STRUCTURAL STEEL
1. STRUCTURAL STEEL TO CONFORM TO THE FOLLOWING UNLESS OTHERWISE NOTED:

SECTIONS	TYPE
COLD FORMED HOLLOW STRUCTURAL SECTION (HSS)	ASTM A500 GRADE B
MACHINE BOLTS	ASTM A307
THREADED AND HANGER ROD	ASTM A36
NUTS FOR BOLTS AND MACHINE BOLTS	ASTM A563
PLAIN WASHERS	ANSI B18.22.1

2. HOT DIPPED GALVANIZED IN ACCORDANCE WITH ASTM A123 AND ASTM A153 STRUCTURAL STEEL AND FASTENERS THAT ARE PERMANENTLY EXPOSED TO WEATHER.

VII. STRUCTURAL TESTS, INSPECTIONS, AND OBSERVATIONS
1. AN INDEPENDENT TESTING AGENCY AND SPECIAL INSPECTORS WILL BE RETAINED BY THE OWNER TO PERFORM THE FOLLOWING TESTS AND INSPECTION. PROVIDE ACCESS AND FURNISH SAMPLES TO THE AGENCY AS REQUIRED.
2. THE FOLLOWING ITEMS REQUIRE TESTS AND INSPECTIONS IN ACCORDANCE WITH THE REQUIREMENTS OF THE CHAPTER "STRUCTURAL TESTS AND INSPECTIONS" OF THE CODE.
3. MECHANICAL ANCHORS:
   A. VERIFY TYPE OF ANCHOR, ANCHOR DIMENSIONS, CONCRETE TYPE AND COMPRESSIVE STRENGTH, PREDRILLED HOLE DIMENSIONS, ANCHOR SPACING, EDGE DISTANCE, SLAB THICKNESS AND ANCHOR EMBEDMENT.
   B. PROOF-TEST AS INDICATED IN THE MECHANICAL ANCHORS SECTION OF THESE GENERAL NOTES.

VIII. DESIGN CRITERIA
1. APPLICABLE CODE: 2007 CALIFORNIA BUILDING CODE.
2. SEISMIC DESIGN:
   SEISMIC FORCE $F_p = 2.31w$ $F_{pv} = 0.385w$
   WHERE:
   S_s = 289% G WORST CASE ACCEL.
   F_a = 1.0 FOR Sd SOIL R_p = 1.5 LOW DEFORMATION
   I_p = 1.5 FOR NON-ESSENTIAL EQUIP. a_p = 1.0 RIGID COMPONENT
3. CRANE LOADING PER AISC
   TRANSVERSE LOADING = 0.2 (DL+LL)
   LONGITUDINAL LOADING = 0.1 (DL+LL)

IX. HOW TO USE THIS PRE-APPROVAL
1. REVIEW AND UNDERSTAND ALL GENERAL NOTES AND FIGURES BEFORE PROCEEDING.
2. FOR THE SELECTED MAXISKY UNIT, DETERMINE THE TRACK LAYOUT AND DIMENSIONS.
3. BASED ON THE TRACK LAYOUT AND DIMENSIONS, DETERMINE THE APPROPRIATE TRACK, THE TRACK BRACING, AND TRACK HANGER REQUIREMENTS FROM THE TABLES ON SHEET S2.
4. DETERMINE THE MAXIMUM DEMANDS ON THE EXISTING STRUCTURE FROM THE NEW UNIT FROM THE TABLE ON SHEET S2, AND VERIFY THE ADEQUACY OF THE EXISTING STRUCTURE WITH THE ENGINEER OF RECORD FOR THE BUILDING.

SHEET LIST
S1 GENERAL NOTES
S2 TRACK ELEVATION
S3 HANGER CONNECTION DETAILS
S4 HANGER CONNECTION DETAILS
S5 BRACE CONNECTION DETAILS

Degenkolb
DEGENKOLB ENGINEERS
235 Montgomery Street, Suite 500
San Francisco, CA 94104
415.392.6952 Phone
415.981.3157 Fax
www.degenkolb.com

REGISTERED PROFESSIONAL ENGINEER RAYMOND S. PUGLIESI No. 3968 EXP. 3/31/12 STRUCTURAL STATE OF CALIFORNIA

APPROVED
Fixed Equipment Anchorage
Office of Statewide Health Planning and Development
OPA-0611-07
Reviewed By George C. Chu 4/19/2010 Date

CONTRACTOR NOTE:
PATIENT LIFT ASSEMBLY SHOP DRAWINGS AND DETAILS ARE REQUIRED TO BE REVIEWED BY THE SEOR AND COR PRIOR TO ORDERING AND OR INSTALLATION. PLANS, DETAILS AND STRUCTURAL CALCULATIONS AS PREPARED BY A CALIFORNIA LICENSED STRUCTURAL ENGINEER ARE REQUIRED

ARJOHUNTLEIGH MAXISKY CEILING LIFTS
Title: GENERAL NOTES
Sheet Number: S1
Drawn: RP Job Number: A5114009.02
Design: RMG Rev.: 2.1
Check: RSP
Date: 4/13/10
1 OF 5 Sheets

100% CONSTRUCTION DOCUMENTS

Revisions: | Date

CONSULTANTS:

ARCHITECT/ENGINEERS: HFP JOB #04-14
LICENSED ARCHITECT ERIC K. PEDERSEN C-24113 REN. 11/30/15 STATE OF CALIFORNIA
hfp architects
209 w. alamar ave
santa barbara, ca 93105
805·969·6887 fax: 805·969·6888

Drawing Title: DETAILS PATIENT LIFT (MAXI-LIFT)
DETAILS CONTINUED ON SHEETS A-6.4 AND A-6.6
Approved: Project Director

Project Title: CT SCANNER PREP VA NORTHERN CALIFORNIA HEALTHCARE SYSTEM
Location: MARTINEZ, CA
Date: 06/26/2015 | Checked | Drawn

Project Number: 612-14-037
Building Number: 19
Drawing Number: A6.5
Dwg. of 42

Office of Construction and Facilities Management
Department of Veterans Affairs

VA FORM 08-6231
M:_Project Files\VA Martinez\Project Files\04-14 CT Scanner Prep\Correspondence\Client\Martinez CT Scan CD NFC 06.17.2015\DrawingsA6.5 PT LIFT EQP-DETS.dwg 6-26-15 01:38:13 PM Nancy