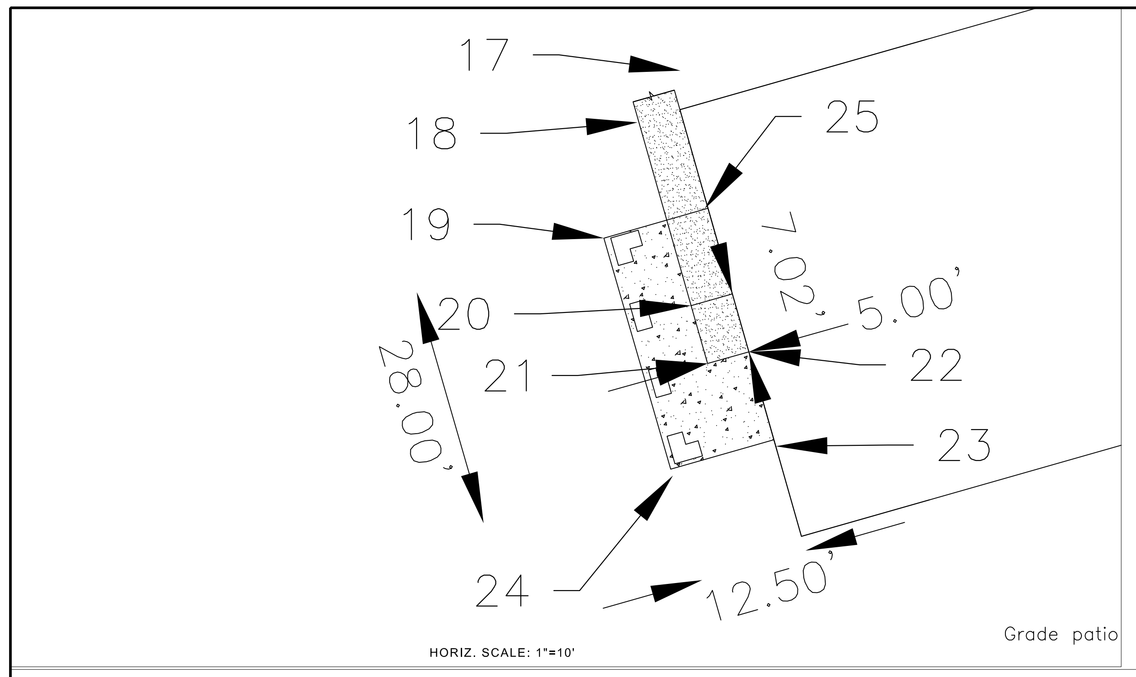

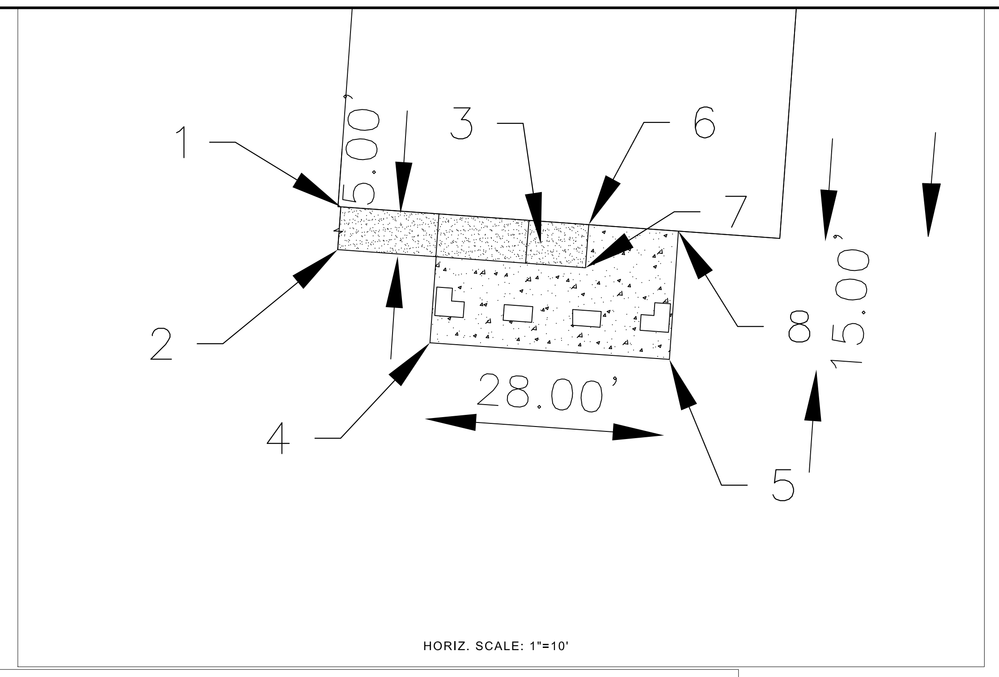

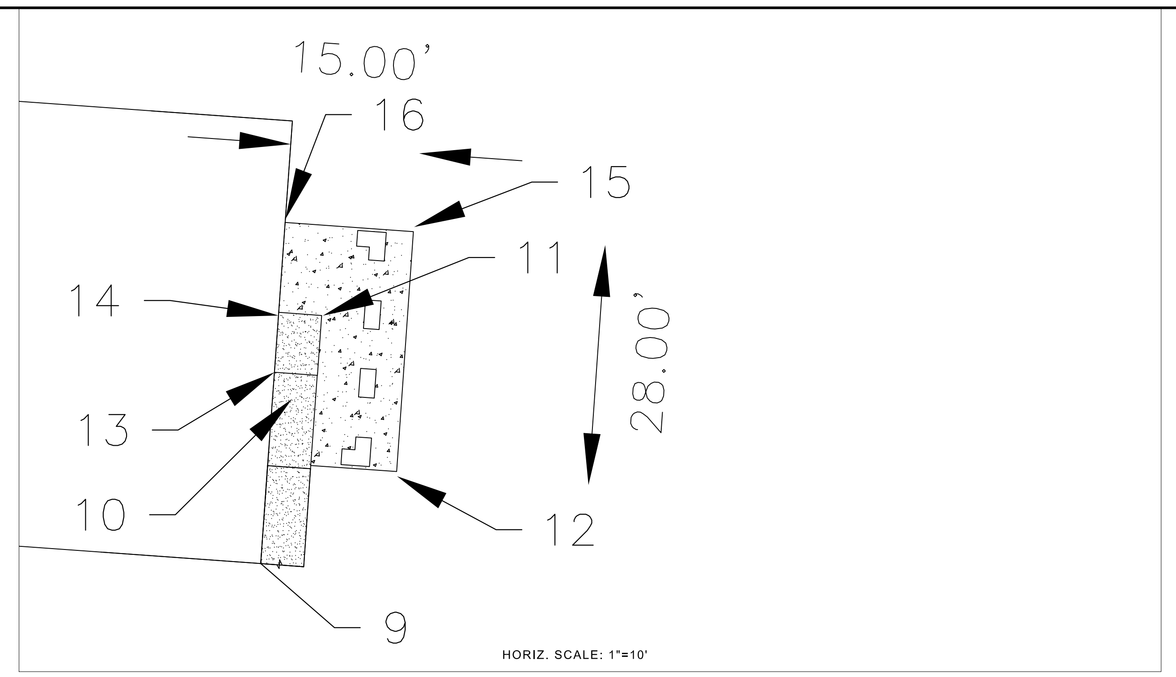

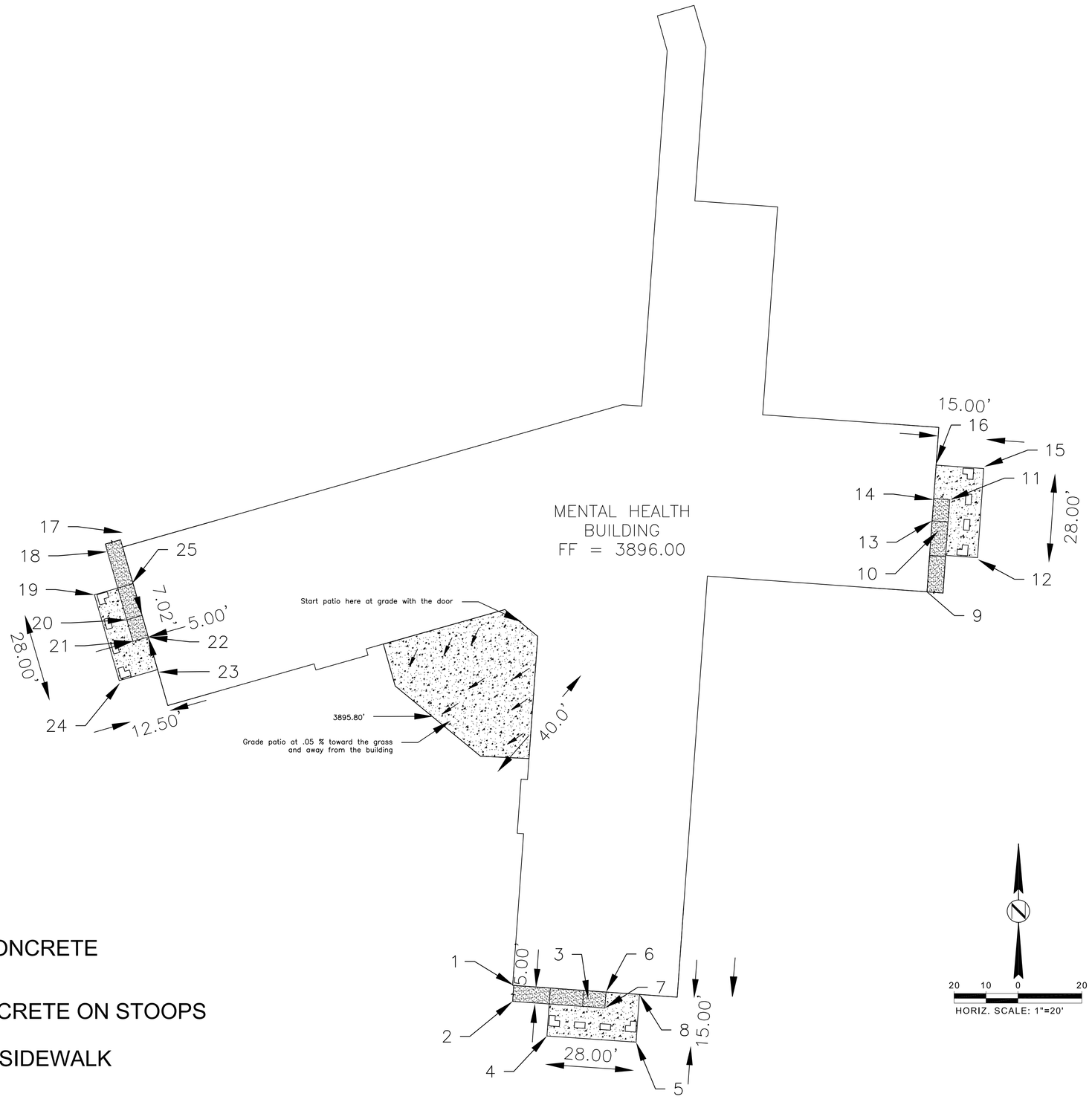

SEE CS-901 FOR CONCRETE DETAILS

NEW CONCRETE ON STOOPS

EXISTING SIDEWALK

Notes:

Grade soil around stoop at constant slope out 50 ft to tie into existing grade.Have soil come up to 2"stoop finished elevation.

Adjust downspouts to new elevation of concrete.

Bring column veneer down to match new concrete elevation. Match existing brick veneer, submit samples for approval.

POINT TABLE

POINT #	ELEVATION	DESCRIPTION
1	3895.5100	SW/BLDG
2	3895.5100	SW
3	3895.8700	STOOP
4	3895.6700	STOOP
5	3895.6700	STOOP
6	3895.9600	STOOP
7	3895.8700	STOOP
8	3896.0000	STOOP
9	3895.2600	SW FG
10	3895.9000	STOOP
11	3895.8500	STOOP
12	3895.3000	STOOP
13	3896.0000	STOOP
14	3896.0000	STOOP
15	3895.3000	STOOP
16	3896.0000	STOOP
17	3895.5000	SW/BLDG
18	3895.3300	SW
19	3895.7500	STOOP
20	3895.9000	STOOP
21	3895.9000	STOOP
22	3896.0000	STOOP
23	3895.7500	STOOP
24	3896.0000	STOOP
25	3896.0000	STOOP

Revisions: Date

CONSULTANTS:

ARCHITECT/ENGINEERS:

Drawing Title: STOOP Plan

Project Title: SHERIDAN VAMC LANDSCAPING FOR BUILDING 87

Project Number: 666-14-801S

Building Number: 87

Approved: Project Director: VAMC Sheridan

Location: Sheridan, Wyoming

Date: 9/14/2014

Checked:

Drawn: CLC

Drawing Number: CS401

Dwg. 3 of 16

Office of Construction and Facilities Management

Department of Veterans Affairs

VA FORM 08-6231

Z:\2 ENGINEERING\PROJECTS\Projects 2014\14-801S B87 Landscape\Design\DWG's\CS-401.dwg 12/9/2014 4:00:20 PM