DEPARTMENT OF VETERANS AFFAIRS
VA ILLIANA HEALTH CARE SYSTEM
1900 EAST MAIN STREET
DANVILLE, ILLINOIS 61832

PROJECT NAME:
DEMOLISH BUILDINGS 12, 26, 40 and 74

PROJECT # 550-11-116

INDEX OF DRAWINGS

GENERAL	
GI-001	COVER SHEET
GI-002	OVERALL CAMPUS MAP
GI-003	STORMWATER POLLUTION PREVENTION PLAN
CIVIL	
12-VF-101	EXISTING TOPOGRAPHY
12-CD-101	SITE DEMOLITION PLAN
12-CD-102	UTILITY DEMOLITION PLAN
12-CS-101	DEVELOPMENT PLAN
12-CE-101	EROSION CONTROL PLAN
12-CS-501	SITE DETAILS
26-VF-101	EXISTING TOPOGRAPHY
26-CD-101	SITE DEMOLITION PLAN
26-CD-102	UTILITY DEMOLITION PLAN
26-CS-101	DEVELOPMENT PLAN
26-CE-101	EROSION CONTROL PLAN
26-CS-501	SITE DETAILS
40-VF-101	EXISTING TOPOGRAPHY
40-CD-101	SITE DEMOLITION PLAN
40-CD-102	UTILITY DEMOLITION PLAN
40-CS-101	DEVELOPMENT PLAN
40-CE-101	EROSION CONTROL PLAN
40-CS-501	SITE DETAILS
ARCHITECTURE	
12-AD-101	EXISTING BASEMENT FLOOR PLAN
12-AD-102	EXISTING FIRST FLOOR PLAN
12-AD-103	EXISTING SECOND FLOOR PLAN
12-AD-104	EXISTING ATTIC FLOOR PLAN
12-AD-201	EXISTING ELEVATIONS
12-AD-202	EXISTING ELEVATIONS
12-AS-101	FACADE RENOVATION BUILDING 11
26-AD-101	EXISTING FLOOR PLANS
26-AD-201	EXISTING ELEVATIONS
40-AD-101	EXISTING PLANS AND ELEVATIONS
74-AD-101	EXISTING PLANS AND ELEVATIONS
ELECTRICAL	
26-E-101	ELECTRICAL SITE PLAN
26-E-501	ELECTRICAL DETAILS AND SCHEDULES
MECHANICAL	
26-M-101	MECHANICAL SITE PLAN
26-M-502	MECHANICAL DETAILS

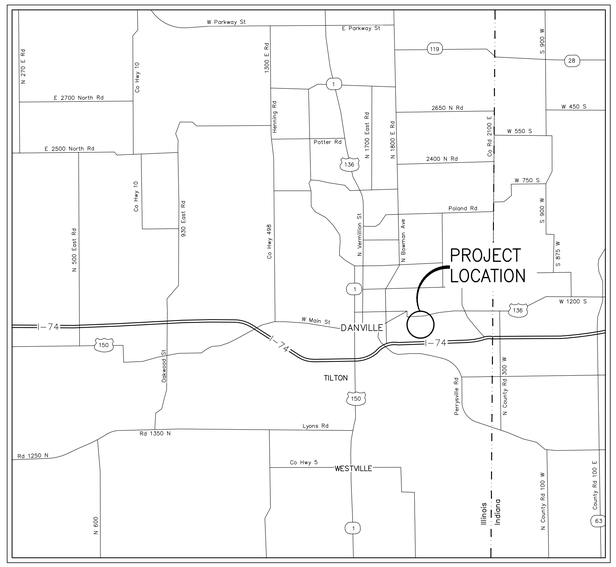

LOCATION MAP
NOT TO SCALE

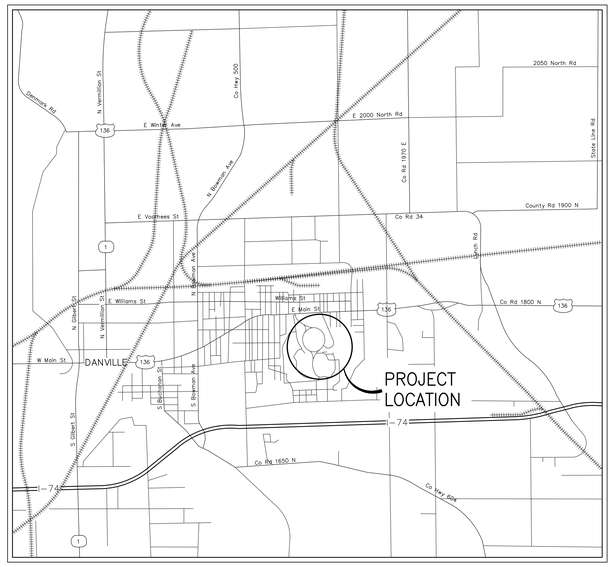

VICINITY MAP
NOT TO SCALE

IEPA-NOI SWPPP PLAN

It is the Contractors responsibility to apply and obtain the EPA SWPP Plan immediately after the Notice To Proceed (NTP), as this is a 30 day approval procedure. No work can commence until the SWPP Plan is received and approved.

100% CONSTRUCTION DOCUMENTS

CONSULTANTS:

Applied Engineering Services
9100 Keystone Crossing, Suite 200
Indianapolis, IN 46240

ARCHITECT/ENGINEERS:

AMERICAN STRUCTUREPOINT INC.
7260 Shadeland Station | Indianapolis, Indiana 46256
TEL 317.547.5580 | FAX 317.543.0270
www.structurepoint.com

Approved: Safety and Occupational Health Manager (003):
PRINT NAME: _____ SIGNATURE: _____

Approved: Chief, Engineering Service (138A)
PRINT NAME: _____ SIGNATURE: _____

Approved: Infection Control Nurse: (11QM)
PRINT NAME: _____ SIGNATURE: _____

Approved: Patient Safety Coordinator: (11QM)
PRINT NAME: _____ SIGNATURE: _____

Approved: Medical Center Director (00):
PRINT NAME: _____ SIGNATURE: _____

Approved: Medical Center Associate Director (001):
PRINT NAME: _____ SIGNATURE: _____

Approved: Medical Center Associate Director Patient Care (12):
PRINT NAME: _____ SIGNATURE: _____

Approved: Chief of Staff (11):
PRINT NAME: _____ SIGNATURE: _____

Drawing Title
GENERAL INFORMATION:
COVER SHEET

Approved: Chief, Operations and Maintenance (138):
PRINT NAME: _____ SIGNATURE: _____

Approved:

Project Title
VA Medical Center
Illiana Healthcare System
Demolish Buildings 12, 26, 40, and 74

Building Number | Checked | Drawn

Location VA ILLIANA HEALTH CARE SYSTEM
DANVILLE, ILLINOIS

Date 2014-12-12

Project No. 550-11-116

DRAWING NO. GI-001

Dwg. 1 of 36

Office of Construction and Facilities Management

VA U.S. Department of Veterans Affairs

VA FORM 08-6231

\\IndySNP\Projects\2010\00629\D. Drawings\0004\Civil\Plan Set\01_550-11-116-GI-001.dwg 15-Dec-14 4:47 PM emiller

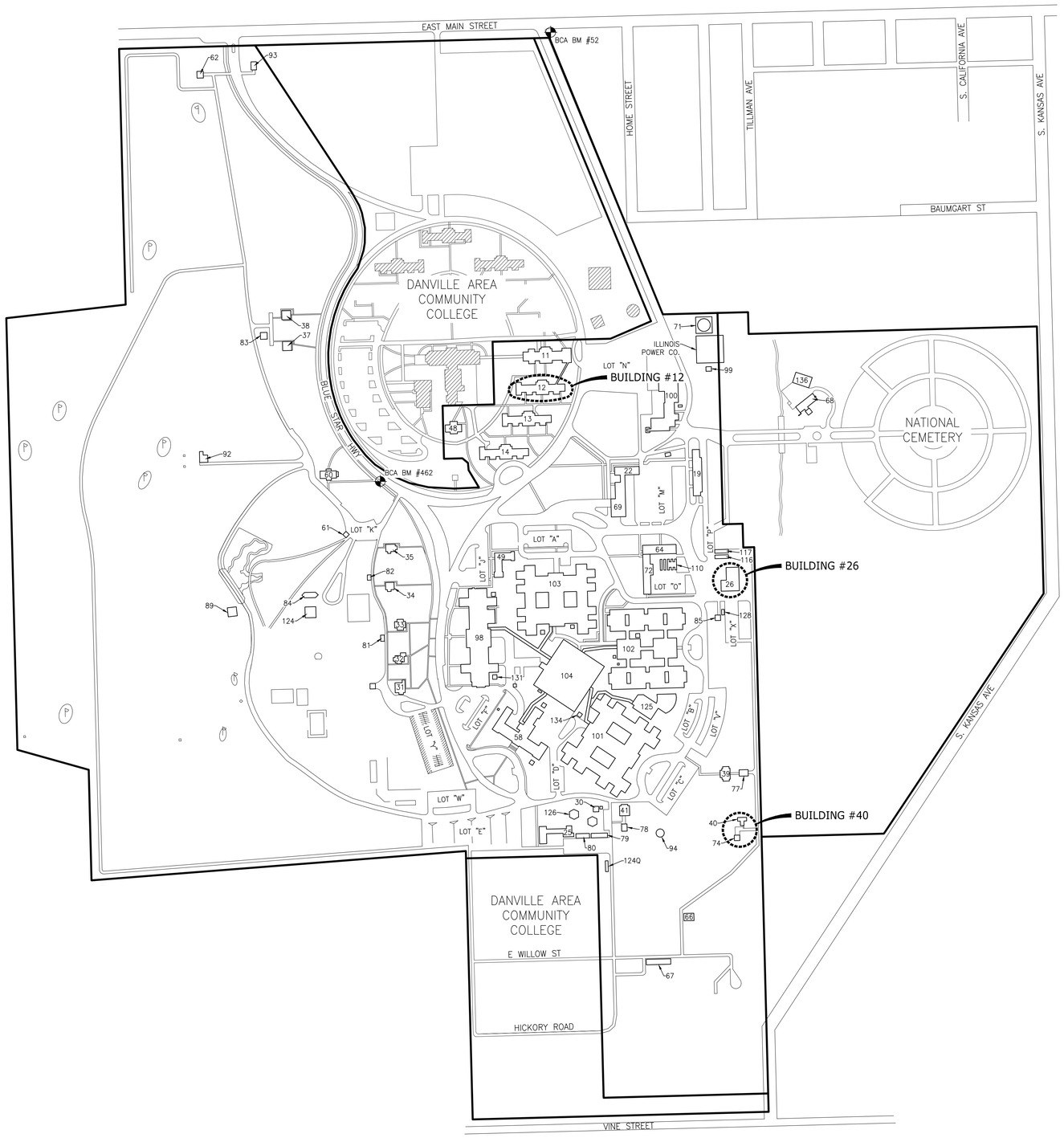

BENCHMARK INFORMATION (NAVD 1988)

BCA BENCHMARK 52
USNGS BM "C 300 1986"
TOP OF STEEL ROD IN UNITED STATES NATIONAL GEODETIC SURVEY VAULT WITH ACCESS CORNER STAMPED "C 300 1986" FOUND 22 FEET SOUTH OF THE SOUTH EDGE OF MAIN STREET AND 9 FEET EAST OF THE EAST EDGE OF THE EAST ACCESS DRIVE TO THE VETERANS ADMINISTRATION HOSPITAL, DANVILLE, VERMILION COUNTY, ILLINOIS.
ELEV-- 640.71

BCA BENCHMARK 462
CHISELED SQUARE SET ON TOP OF THE NORTHEASTERLY SIDE OF A CONCRETE LIGHT POLE BASE, 225 FEET SOUTHEAST OF THE SOUTHEAST CORNER OF A TWO STORY BRICK BUILDING (VETERANS ADMINISTRATION BUILDING NUMBER 60) AND 16 FEET SOUTHWEST OF THE CENTERLINE OF VETERANS ADMINISTRATION ACCESS DRIVE, DANVILLE, VERMILION COUNTY, ILLINOIS.
ELEV – 632.65

OVERALL CAMPUS MAP

NOT TO SCALE

100% CONSTRUCTION DOCUMENTS

Revisions:	Date

CONSULTANTS:

Applied Engineering Services
9100 Keystone Crossing, Suite 200
Indianapolis, IN 46240

ARCHITECT/ENGINEERS:

AMERICAN STRUCTUREPOINT INC.
7260 Shadeland Station | Indianapolis, Indiana 46256
TEL 317.547.5580 | FAX 317.543.0270
www.structurepoint.com

Drawing Title: OVERALL CAMPUS MAP

Approved: Project Director

Project Title: VA Medical Center, Illiana Healthcare System, Demolish Buildings 12, 26, 40, and 74

Location: Danville, Illinois

Date: 2014-12-12 | Checked: RLN / SAC | Drawn: JLG

Project Number: 550-11-116

Building Number: --

Drawing Number: GI-002

Dwg. 2 of 36

Office of Construction and Facilities Management

VA U.S. Department of Veterans Affairs

VA FORM 08-6231

P:\2010\00629\D. Drawings\0004\Civil\Plan Set\02_550-11-116-GI-002.dwg 12-15-14 04:47:53 PM emiller

SITE NAME

The area scheduled for construction is known as "Demolish Buildings 12, 26, 40" (hereinafter referred to as the "Project").

PROJECT LOCATION

The property is located on the Illiana Healthcare System Campus in Danville, Illinois, at a latitude of 40°07'28" N and a longitude of 87°35'07" W.

OWNER'S INFORMATION

Name:	Department of Veterans Affairs
Address:	1900 East Main Street, Danville, Illinois 61832
Representative:	Neil Eickholtz
Title:	Chief, Engineering Project Section
Telephone:	(217) 554-5928

OPERATOR'S INFORMATION

Name:	Department of Veterans Affairs
Address:	1900 East Main Street, Danville, Illinois 61832
Representative:	Neil Eickholtz
Title:	Chief, Engineering Project Section
Telephone:	(217) 554-5928

NOTICE OF INTENT

All parties defined as owners or operators must submit a Notice of Intent (NOI) at least 48 hours prior to commencement of on-site construction activities. Submittal of late NOI's is not prohibited; however, authorization under the construction general permit is only for discharges that occur after permit coverage is granted. Unpermitted discharges may be subject to enforcement actions by the EPA. For the purposes of this permit, an operator is defined as any party meeting either of the following requirements:

a) The party has operational control over construction plans and specifications, including the ability to make modifications to those plans and specifications.
b) The party has day-to-day operational control of those activities at a project that are necessary to ensure compliance with a stormwater pollution prevention plan for the site or other permit conditions.

11" x 17" PLAT

Refer to the Overall Campus Map, GI-002.

PROJECT NARRATIVE

The proposed project includes the demolition of Buildings 12, 26 and 40 along with the demolition of associated site and utilities.

VICINITY MAP

Refer to Cover Sheet

LOCATION OF ALL LOTS AND PROPOSED SITE IMPROVEMENTS

The proposed lots and proposed site improvements are shown on the included plans.

HYDROLOGIC UNIT CODE (HUC)

051201090903

STATE AND FEDERAL WATER QUALITY PERMITS

Not applicable

SPECIFIC POINT WHERE STORMWATER DISCHARGE WILL LEAVE THE SITE

All stormwater runoff will be routed to the existing storm sewer system.

LOCATION AND NAME OF ALL WETLANDS, LAKES, AND WATERCOURSES ON AND ADJACENT TO THE SITE

No wetlands, lakes or watercourses are on or adjacent to the site.

IDENTIFICATION OF ALL RECEIVING WATERS

Lick Creek to Stoney Creek

IDENTIFICATION OF ALL POTENTIAL DISCHARGES TO GROUND WATER

There are no locations on site where surface water may be discharged into ground water.

100-YEAR FLOODPLAINS, FLOODWAYS, AND FLOODWAY FRINGES

The site is not located in within any floodplain, floodway, or floodway fringe as indicated on the Flood Insurance Rate Map (FIRM) for Vermillion County, Illinois, Map Numbers 17183C0380D, dated May 16, 2012.

ADJACENT LAND USE

North: Danville Area Community College
East: Danville National Cemetery
South: Residential
West: Residential

LOCATIONS AND APPROXIMATE BOUNDARIES OF ALL DISTURBED AREAS

Approximate boundaries of disturbed areas are as identified on the Erosion Control Plan Sheets.

IDENTIFICATION OF EXISTING VEGETATIVE COVER

The current property consists of buildlings, and parking lots.

SOILS MAP INCLUDING SOIL DESCRIPTION AND LIMITATIONS

The Natural Resources Conservation Service (NRCS) Web Soil Survey of Vermillion County, Illinois, indicates Strawn silt loam, Kendall silt loam, Urban land, and Senachwine silt loam soils are located on the site.

The on-site soil will be treated as recommended by the geotechnical engineer if the conditions are unsuitable for the pavement system. Remedial treatments may include, but are not limited to, removal of unsuitable soil and backfilling with engineered material, installation of a geofabric within or under the pavement system, or treatment of the subgrade with lime.

LOCATIONS, SIZE, AND DIMENSIONS FOR PROPOSED STORMWATER SYSTEMS

Refer to Development Plan Sheets for any stormwater systems.

PLANS FOR ANY OFF-SITE CONSTRUCTION ACTIVITIES ASSOCIATED WITH THIS PROJECT

There are no off-site construction activities associated with this project.

LOCATIONS OF PROPOSED SOIL STOCKPILES AND/OR BORROW/DISPOSAL

Excess soil shall be immediately stockpiled and seeded and/or removed from the construction site in accordance with all applicable laws.

EXISTING SITE TOPOGRAPHY

Refer to Existing Topography Plan Sheets

PROPOSED FINAL SITE TOPOGRAPHY

Refer to Development Plan Sheets

DESCRIPTION OF POTENTIAL POLLUTANT SOURCES ASSOCIATED WITH CONSTRUCTION ACTIVITIES

The following potential pollutant sources may be associated with construction activities on site:
1. Material storage areas (more specifically described below)
2. Construction waste material
3. Fuel storage areas and fueling stations
4. Exposed soils
5. Leaking vehicles and equipment
6. Sanitary waste from temporary toilet facilities
7. Litter
8. Windblown dust
9. Soil tracking off site from construction equipment

The following construction materials will be staged or stored on site at various points during development of the site:
1. Structural fill
2. Road Base
3. Plastic drainage pipe
4. Water main pipe and appurtenances
5. Concrete drainage pipe
6. Concrete culverts
7. Precast concrete manholes
8. Rock rip-rap

SEQUENCE DESCRIBING STORMWATER QUALITY MEASURE IMPLEMENTATION RELATIVE TO LAND-DISTURBING ACTIVITIES

INITIAL PHASE
1. Install construction entrance.
2. Utilize the gravel construction entrance for installation of the perimeter silt fence. Add stone if needed. Post the NOI at the entrance. Add protection measures to existing inlets. Minimize impacts to existing areas offsite where possible.
3. Install staging area, fueling station, material storage area and concrete truck washout.
4. Strip the top soil and stockpile. Begin grading operations.
5. Complete the cut and fills on the site. Final grade and seed the pond slopes. Install check dams or stabilize the slopes with erosion control blankets.
6. Prior to building construction, install stone surface for paved areas.
7. Any disturbed areas left dormant for more than 15 days, must be temporarily seeded.

BUILDING PHASE
8. Start building construction. Install staging area for building materials.
9. Install storm sewer and other utilities. Provide inlet protection immediately upon completion of the inlet and install riprap outlet protection prior to installing outlets.
10. Final grade and stabilize slopes when stormwater inlets are functioning.
11. Continue building construction and seed the perimeter of the site or other areas left dormant for 15 days.
12. Complete utility installation, curbs, paving and building construction.

FINAL STABILIZATION
13. Install landscaping plant material and stabilize all disturbed areas onsite and offsite.
14. Remove all temporary erosion and sediment control practices when areas have a uniform grass cover. All permanent erosion and sediment control measures shall remain in place.

STABLE CONSTRUCTION ENTRANCE LOCATIONS AND SPECIFICATIONS

Construction entrances will be in place prior to any site construction or demolition. Existing paved drives will be used for construction entrances.

SEDIMENT CONTROL MEASURES FOR SHEET FLOW AREAS

Sheet flow areas will be protected by seed and mulch or hydroseeding. Erosion control blankets will be installed on sloped areas where the slope exceeds 6:1 (horizontal to vertical). Refer to the Erosion Control Detail Sheets.

STORM SEWER INLET PROTECTION MEASURE LOCATIONS AND SPECIFICATIONS

The contractor shall install inlet protection in each inlet in paved areas and silt fence around inlets in grass areas during construction. Refer to the Erosion Control Plan for locations and refer to Erosion Control Details for details. Straw bales will not be allowed as inlet protection measures.

RUNOFF CONTROL MEASURES

Not applicable.

STORMWATER OUTLET PROTECTION SPECIFICATIONS

Refer to detail shown on Sheet 26-CS-501.

GRADE STABILIZATION STRUCTURE LOCATIONS AND SPECIFICATIONS

Not applicable.

LOCATION, DIMENSIONS, SPECIFICATIONS, AND CONSTRUCTION DETAILS OF EACH STORMWATER QUALITY MEASURE

Not applicable.

TEMPORARY SURFACE STABILIZATION METHODS APPROPRIATE FOR EACH SEASON

Refer to the Erosion Control Detail Sheets, within the Seasonal Soil Protection Chart.

PERMANENT SURFACE STABILIZATION SPECIFICATIONS

A. Loosen lawn area to a minimum depth of 6 inches. Mix soil amendments and fertilizers with topsoil at rates specified. Organic soil amendments such as peat, compost or manure shall be applied at 2" depth evenly over soil and incorporated into the top 6" of topsoil. Provide fertilizer with percentage of nitrogen required to provide not less than 1 pound of actual nitrogen per 1,000 sq. ft. of lawn area and not less than 4 percent phosphoric acid and 2 percent potassium. At least 50 percent of nitrogen to be organic form. Delay mixing of fertilizer if planting will not follow placing of planting soil within a few days.

B. fertilizer for lawns: provide a fast release fertilizer with a composition of 1 lb per 1,000 sq. ft. of actual nitrogen, 4 percent phosphorous, and 2 percent potassium by weight.

C. slow-release fertilizer for trees and shrubs: granular fertilizer consisting of 50 percent water-insoluble nitrogen, phosphorous and potassium made up of a composition by weight of 5 percent

D. Grade lawn and grass areas to a smooth, even surface with loose, uniformly fine texture. Limit fine grading to areas that can be planted within immediate future. Remove trash, debris, stones larger than 1 inch diameter, and other objects that may interfere with planting or maintenance operations. Sow seed using a spreader or seeding machine. Do not seed when wind velocity exceeds 5 miles per hour.

E. Distribute seed evenly over entire area by sowing equal quantity in 2 directions at right angles to each other.

F. Rake seed lightly into top 1/8 inch of soil, roll lightly, and water with a fine spray.

G. Install erosion control blankets as indicated on the plan and on any slopes greater than 6:1 and in areas of concentrated flow.

H. Protect seeded areas against erosion by spreading clean, seed-free straw mulch after completion of seeding operations. Spread uniformly to form a continuous blanket not less than 1-1/2 inches loose measurements over seeded areas.

I. Water newly planted lawn areas and keep moist until new grass is established. Immediately repair any lawn areas disturbed by construction activities including tree and shrub installation.

J. Refer to the Erosion Control Detail Sheets, within the Seasonal Soil Protection Chart for timing of temporary and permanent seeding and grass seed specifications.

MATERIAL HANDLING AND SPILL PREVENTION PLAN

Solid Waste Disposal

No solid material, including building materials, is permitted to be discharged to surface waters or buried on site. All solid waste materials, including disposable materials incidental to the construction activity, must be collected in containers or closed dumpsters. The collection containers must be emptied periodically and the collected material hauled to a landfill permitted by the State and/or appropriate local municipality to accept the waste for disposal.

A foreman or supervisor should be designated in writing to oversee, enforce, and instruct construction workers on proper solid waste procedures.

Hazardous Waste

Whenever possible, minimize the use of hazardous materials and generation of hazardous wastes. All hazardous waste materials will be disposed in the manner specified by federal, state, or local regulations or by the manufacturer.

Use containment berms in fueling and maintenance areas and where potential for spills is high.

A foreman or supervisor should be designated in writing to oversee, enforce and instruct construction workers on proper hazardous waste procedures. The location of any hazardous waste storage areas should be indicated on the stormwater pollution prevention plan by the operator following on-site location of the facility.

Dust Control/Off-Site Vehicle Tracking

During construction, water trucks should be used, as needed, by each contractor or subcontractor to reduce dust. After construction, the site should be stabilized to reduce dust.

Construction traffic should enter and exit the site at a Construction Entrance with a rock pad or equivalent device. The purpose of the rock pad is to minimize the amount of soil and mud that is tracked onto existing streets. If sediment escapes the construction site, off-site accumulations of sediment must be removed at a frequency sufficient to minimize offsite impacts.

Offsite accumulations of sediment as a result of tracking must be removed daily at a minimum.

Sanitary/Septic

Contractors and subcontractors must comply with all state and local sanitary sewer, portable toilet, or septic system regulations. Sanitary facilities shall be provided at the site by each contractor or subcontractor throughout construction activities. The sanitary facilities should be utilized by all construction personnel and be serviced regularly. All expenses associated with providing sanitary facilities are the responsibility of the contractors and subcontractors. The location of any sanitary facilities should be indicated on the stormwater pollution prevention plan by the operator following on-site location of said facilities.

Water Source

Water used to establish and maintain grass, to control dust, and for other construction purposes must originate from a public water supply or private well approved by the State or local health department.

Equipment Fueling and Storage Areas

Equipment fueling, maintenance, and cleaning should only be completed in protected areas (i.e., bermed area). Leaking equipment and maintenance fluids will be collected and not allowed to discharge onto soil where they may be washed away during a rain event.

Equipment wash down (except for wheel washes) should take place within an area surrounded by a berm. The use of detergents is prohibited.

Hazardous Material Storage

Chemicals, paints, solvents, fertilizers, and other toxic or hazardous materials should be stored in their original containers (if original container is not resealable, store the products in clearly labeled, waterproof containers). Except during application, the containers should be kept in trucks or in bermed areas within covered storage facilities. Runoff containing such materials shall be collected, removed from the site, and disposed of in accordance with the federal, state, and local regulations.

As may be required by federal, state or local regulations, the Contractor should have a Hazardous Materials Management Plan and/or Hazardous Materials Spill and Prevention Program in place. A foreman or supervisor should be designated in writing to oversee, enforce, and instruct construction workers on proper hazardous materials storage and handling procedures. The location of any hazardous material storage areas should be indicated on the stormwater pollution prevention plan by the operator following on-site location of the storage areas.

Material Handling and Spill Prevention

Discharge of hazardous substances or oil into stormwater is subject to reporting requirements. In the event of a spill of a hazardous substance, the operator is required to notify the National Response Center 1-800-424-8802) to properly report the spill. In addition, the operator shall submit a written description of the release (including the type and amount of material released, the date of the release, the circumstances of the release, and the steps to be taken to prevent future spills) to the local Soil and Water Conservation District. The SWPPP must be revised within 14 calendar days after the release to reflect the release, stating the information above along with modifications to minimize the possibility of future occurrences. Each contractor and subcontractor is responsible for complying with these reporting requirements.

Concrete Washout

All concrete trucks waste material shall be completely contained and disposed in accordance with all local, state, and federal regulations. A pit or container is required when cleaning concrete chutes.

Spill Response Plan

The project supervisor should be notified of all spills. If a spill has the potential for groundwater or surface water pollution, If a spill does pollute the surface or ground water, the Illinois Environmental Protection Agency (888-372-1996) needs to be contacted.

All possible measures such as diking or calling a spill clean-up specialist shall be used to minimize any impacts. Clean up materials shall be stocked on the construction site at all times.

MONITORING AND MAINTENANCE GUIDELINES FOR EACH PROPOSED STORMWATER QUALITY MEASURE

Inspection Schedule/Reporting

All impacted areas, as well as all erosion and sediment control devices, will be inspected every seven (7) calendar days and within 24 hours after a rainfall of 0.5 inch or greater. Inspections shall be conducted and a written report prepared, by a designated and qualified person familiar with the USEPA NPDES Storm Water General Permit, this SWPPP, and the Project.

Inspection reports shall be completed including scope of the inspection, name(s) and qualifications of personnel making the inspection, the date of the inspection, observations relating to the implementation of the SWPPP, and any actions taken as a result of incidents of noncompliance noted during the inspection. The inspection report should state whether the site was in compliance or identify any incidents of noncompliance. The contractor shall keep a copy of the inspection reports on site and permanently for a period of two years following construction. The on-site reports may be requested by inspections conducted by the local Soil and Water Conservation District.

Construction Entrance

Locations where vehicles exit the site shall be inspected for evidence of off-site sediment tracking. Each contractor and subcontractor shall be responsible for maintaining the Construction Entrance and other controls as described in this SWPPP.

Material Storage Inspections

Inspectors must evaluate areas used for storage of materials that are exposed to precipitation. The purpose is to ensure that materials are protected and/or impounded so that pollutants cannot discharge from storage areas. Off-site material storage areas used solely by the subject project are considered to be part of the project and must be included in the erosion control plans and the site inspection reports.

Soil Stabilization Inspections

Seeded areas will be inspected to confirm that a healthy stand of vegetation is maintained. The site has achieved final stabilization once all areas are covered with pavement or have a stand of vegetation with at least 70% of the background vegetation density. The density of 70% or greater must be maintained to be considered as stabilized. The operator or their representative will water, fertilize, and reseed disturbed areas as needed to achieve this goal.

Erosion and Sediment Control Inspections

All controls should be inspected at least once every seven (7) calendar days and following any storm event of 0.5 inch or greater. The following is a list of inspection/maintenance practices that will be used for specific controls:

1. Geotextiles/Erosion Control Mats: Missing or loose matting must be replaced or re-anchored.
2. Inlet Protection: Sediment should be removed when it reaches approximately one-half the height of the fence. If a sump is used, sediment should be removed when the volume of the basin is reduced by 50%.
3. Diversion Swales: Clean debris or other obstructions as needed. Damage from storms or normal construction activities (i.e., tire ruts) shall be repaired immediately.
4. Mulching: Inspect for thin or bare spots caused by natural decomposition or weather-related events. Mulch in high traffic area should be replaced on a regular basis to maintain uniform protection.
5. Sediment Trap: Accumulated silt shall be removed and the basin shall be regarded to its original dimensions at such point that the capacity of the impoundment has been reduced to one-half of its original storage capacity. The removed sediment shall be stockpiled or redistributed in areas that are protected from erosion.
6. Sediment Basin: Inspect frequently to check for damage and to ensure obstructions are not diminishing the effectiveness of the structures. Sediment shall be removed and the basin shall be regarded to its original dimensions at such point that the capacity of the impoundment has been reduced to 20% of its original storage capacity. The removed sediment shall be stockpiled or redistributed in areas that are protected from erosion.
7. Silt Fence: Removal of built-up sediment will occur when the sediment reaches one-third the height of the fence.
8. Stabilized Construction Entrance: Periodic regarding and top dressing with additional stones.
9. Straw Bales: Replace straw bales that show signs of deterioration.
10. Vegetation: Protect newly seeded areas from excessive runoff and traffic until vegetation is established. Establish a watering and fertilizing schedule.
11. Good Housekeeping: Litter, construction debris, and construction chemicals exposed to stormwater shall be prevented from becoming a pollutant source for stormwater discharges through screening of outfalls and daily pickup of litter.

In the event that sediment escapes the construction site, off-site accumulations of sediment must be removed immediately upon discovery.

Based on inspection results, any necessary modification to this SWPPP shall be implemented within seven calendar days of the inspection. A modification is necessary if a control measure or operational procedure does not provide adequate pollutant control. All revisions shall be recorded on a Record of Revisions within seven calendar days of the inspection.

It is the responsibility of the operator to maintain effective pollutant discharge controls. Physical site conditions or contractor/subcontractor practices could make it necessary to install more controls than were originally planned. For example, localized concentrations of surface runoff or unusually steep areas could require additional silt barrier or other structural controls. Assessing the need for and installing additional controls will be a continuing contractor/subcontractor responsibility until final stabilization is achieved. Contractors and subcontractors implementing this SWPPP must remain alert to the need to periodically refine and update this SWPPP in order to accomplish the intended goals.

Notice of Termination

Compliance of the site with the General Construction Permit remains the responsibility of all operators that have submitted an NOI until such time as they have submitted a Notice of Termination (NOT). The permittee's authorization to discharge under the General Construction Permit terminates at midnight of the day the NOT is signed.

All permittees must submit an NOT within thirty (30) days after one or more of the following conditions have been met:

1. Final stabilization has been achieved on all portions of the site for which the permittee was responsible.

2. Another operator/permittee has assumed control over all areas of the site that have not been finally stabilized.

3. In residential construction operations, temporary stabilization has been completed and the residence has been transferred to the owner.

EROSION AND SEDIMENT CONTROL SPECIFICATIONS FOR INDIVIDUAL BUILDING LOTS

Since the entire site is under a single ownership, there are not any individual building lots.

100% CONSTRUCTION DOCUMENTS

Revisions:	Date

CONSULTANTS:

Applied Engineering Services
9100 Keystone Crossing, Suite 200
Indianapolis, IN 46240

ARCHITECT/ENGINEERS:

AMERICAN STRUCTUREPOINT INC.
7260 Shadeland Station | Indianapolis, Indiana 46256
TEL 317.547.5580 | FAX 317.543.0270
www.structurepoint.com

Drawing Title: STORMWATER POLLUTION PREVENTION PLAN

Approved: Project Director

Project Title: VA Medical Center, Illiana Healthcare System, Demolish Buildings 12, 26, 40, and 74

Location: Danville, Illinois

Date: 2014-12-12 | Checked: RLN / SAC | Drawn: JLG

Project Number: 550-11-116

Building Number: ---

Drawing Number: GI-003

Dwg. 3 of 36

Office of Construction and Facilities Management

VA U.S. Department of Veterans Affairs

VA FORM 08-6231

P:\2010\00629\D. Drawings\0004\Civil\Plan Set\03-550-11-116-GI-003.dwg 15-Dec-14 4:48 PM jgustafson

GENERAL NOTES

1. ALL UTILITY INFORMATION SHALL BE VERIFIED BY THE CONTRACTOR PRIOR TO COMMENCING DEMOLITION & CONSTRUCTION.
2. MAINTAIN EXISTING UTILITIES TO REMAIN IN SERVICE AND PROTECT AGAINST DAMAGE DURING DEMOLITION AND CONSTRUCTION.
3. THE CONTRACTOR SHALL PROTECT AND NOT DESTROY THE SURVEY CONTROL POINTS DURING DEMOLITION AND CONSTRUCTION.
4. SOME INFORMATION HAS BEEN SHOWN PER AS-BUILT AND/OR RECORD DRAWINGS PROVIDED BY THE VETERANS AFFAIR. THIS INFORMATION HAS BEEN SCALED FROM THE DRAWINGS AND MAY NOT REPRESENT THE EXACT LOCATION IN THE FIELD. IT IS THE CONTRACTOR'S RESPONSIBILITY TO FIELD VERIFY EXISTING CONDITIONS PRIOR TO DEMOLITION ACTIVITIES. CONTRACTOR TO NOTIFY CONTRACTING OFFICER IMMEDIATELY AND ENGINEER IF ANY DISCREPANCIES ARE FOUND.

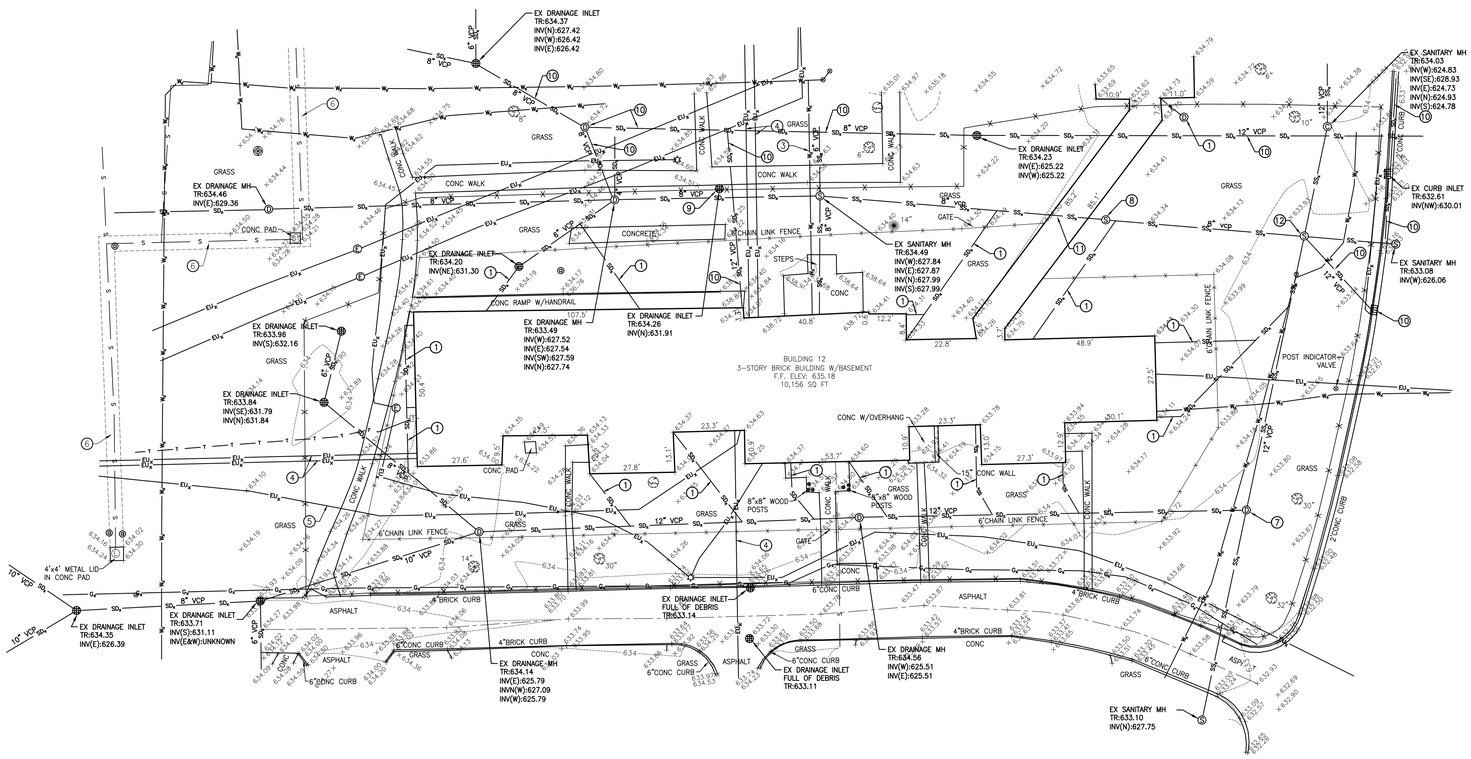

LEGEND

- STEAM MANHOLE
- CURB INLET
- DRAINAGE INLET
- CLEAN OUT
- COMBINATION MANHOLE
- SANITARY MANHOLE
- DRAINAGE MANHOLE
- LID
- GUARD POST
- SIGN
- ELECTRIC METER
- ELECTRIC MANHOLE
- LIGHT POLE
- TRANSFORMER
- GAS METER
- VALVE (GAS & WATER)
- TERMITE BAIT SYSTEM
- TELEPHONE MANHOLE
- TELEPHONE PEDESTAL
- TELEPHONE BOX
- FIRE VALVE SHUT OFF
- HOSE BIB
- WATER METER
- VENT
- BUSH
- CONIFEROUS TREE
- DECIDUOUS TREE

- UNDERGROUND ELECTRIC LINE
- BURIED FIBER OPTIC LINE
- UNDERGROUND GAS
- UNDERGROUND STEAM LINE
- UNDERGROUND COMMUNICATIONS
- UNDERGROUND WATER LINE
- SANITARY SEWER
- STORM SEWER
- TR — TOP OF RIM ELEVATION
- INV — INVERT ELEVATION
- VCP — VITRIFIED CLAY PIPE

1. POSSIBLE 4" ROOF DRAIN COLLECTOR PER RECORD DRAWING 12-2 PLUMBING ALTERATIONS TO BUILDING NO. 12, DATED OCTOBER 6, 1934.
2. POSSIBLE BLIND TIE TO SANITARY SEWER PER RECORD DRAWING 12-2 PLUMBING ALTERATIONS FOR BUILDING NO. 12, DATED OCTOBER 6, 1934.
3. POSSIBLE WATER LINE PER RECORD DRAWING NO. E-3B OF AIR CONDITIONING FOR BUILDINGS 11 AND 12, DATED FEBRUARY 23, 1977.
4. POSSIBLE ELECTRIC DUCTS (CONCRETE ENCASED, 3-3" DUCTS) PER RECORD DRAWING NO. E-3B OF AIR CONDITIONING FOR BUILDINGS 11 AND 12, DATED FEBRUARY 23, 1977.
5. POSSIBLE ELECTRIC LINE PER RECORD DRAWING NO. E-3B OF AIR CONDITIONING FOR BUILDINGS 11 AND 12, DATED FEBRUARY 23, 1977.
6. POSSIBLE STEAM TUNNEL PER RECORD DRAWING NO. E-3B OF AIR CONDITIONING FOR BUILDINGS 11 AND 12, DATED FEBRUARY 23, 1977.
7. POSSIBLE STORM STRUCTURE, PER CAD FILE PROVIDED BY THE VA AND FIELD INVESTIGATION PERFORMED BY THE VA.
8. POSSIBLE SANITARY STRUCTURE, PER CAD FILE PROVIDED BY THE VA. (CONTRACTOR TO FIELD VERIFY SIZE AND DEPTH PRIOR TO CONSTRUCTION)
9. ABANDONED MANHOLE PER FIELD INVESTIGATION PERFORMED BY THE VA.
10. STORM SEWER INFORMATION PER FIELD INVESTIGATION PERFORMED BY THE VA.
11. EXISTING COMBINED SEWER DROPS WITHIN THE CRAWL SPACE OF BUILDING. PER FIELD INVESTIGATION PERFORMED BY THE VA. EXACT PIPE INVERT ELEVATIONS AT DROP ARE UNKNOWN.
12. SANITARY SEWER MANHOLE PER FIELD INVESTIGATION PERFORMED BY THE VA.

BENCHMARK INFORMATION (NAVD 1988)

BCA BENCHMARK 52
USNGS BM "C 300 1986"
TOP OF STEEL ROD IN UNITED STATES NATIONAL GEODETIC SURVEY VAULT WITH ACCESS CORNER STAMPED "C 300 1986" FOUND 22 FEET SOUTH OF THE SOUTH EDGE OF MAIN STREET AND 9 FEET EAST OF THE EAST EDGE OF THE EAST ACCESS DRIVE TO THE VETERANS ADMINISTRATION HOSPITAL, DANVILLE, VERMILION COUNTY, ILLINOIS.
ELEV- 640.71

BCA BENCHMARK 462
CHISELED SQUARE SET ON TOP OF THE NORTHEASTERLY SIDE OF A CONCRETE LIGHT POLE BASE, 225 FEET SOUTHEAST OF THE SOUTHEAST CORNER OF A TWO STORY BRICK BUILDING (VETERANS ADMINISTRATION BUILDING NUMBER 60) AND 16 FEET SOUTHWEST OF THE CENTERLINE OF VETERANS ADMINISTRATION ACCESS DRIVE, DANVILLE, VERMILION COUNTY, ILLINOIS.
ELEV - 632.65

CAUTION !!
THE LOCATIONS OF ALL EXISTING UNDERGROUND UTILITIES SHOWN ON THIS PLAN ARE BASED UPON ABOVE GROUND EVIDENCE (including, but not limited to, manholes, inlets, valves, and marks made upon the ground by others) AND ARE SPECULATIVE IN NATURE. THERE MAY ALSO BE OTHER EXISTING UNDERGROUND UTILITIES FOR WHICH THERE IS NO ABOVE GROUND EVIDENCE OR FOR WHICH NO ABOVE GROUND EVIDENCE WAS OBSERVED. THE EXACT LOCATIONS OF SAID EXISTING UNDERGROUND UTILITIES SHALL BE VERIFIED BY THE CONTRACTOR PRIOR TO ANY AND ALL CONSTRUCTION.

EXISTING TOPOGRAPHY

1" = 20' 0' 10' 20' 40'

100% CONSTRUCTION DOCUMENTS

Revisions	Date

CONSULTANTS:
Applied Engineering Services
9100 Keystone Crossing, Suite 200
Indianapolis, IN 46240

ARCHITECT/ENGINEERS:
AMERICAN STRUCTUREPOINT INC.
7260 Shadeland Station | Indianapolis, Indiana 46256
TEL 317.547.5580 | FAX 317.543.0270
www.structurepoint.com

Drawing Title: EXISTING TOPOGRAPHY
Approved: Project Director
Project Title: VA Medical Center, Illiana Healthcare System, Demolish Buildings 12, 26, 40, and 74
Location: Danville, Illinois
Date: 2014-12-12
Checked: RLN / SAC
Drawn: JLG
Project Number: 550-11-116
Building Number: 12
Drawing Number: 12-VF-101
Dwg. 4 of 36

Office of Construction and Facilities Management
VA U.S. Department of Veterans Affairs

VA FORM 08-6231

P:\2010\00629\D_Drawings\0004\Civil\Plan Set\04_550-11-116-12-VF-101.dwg 12-15-14 04:48:16 PM emiller

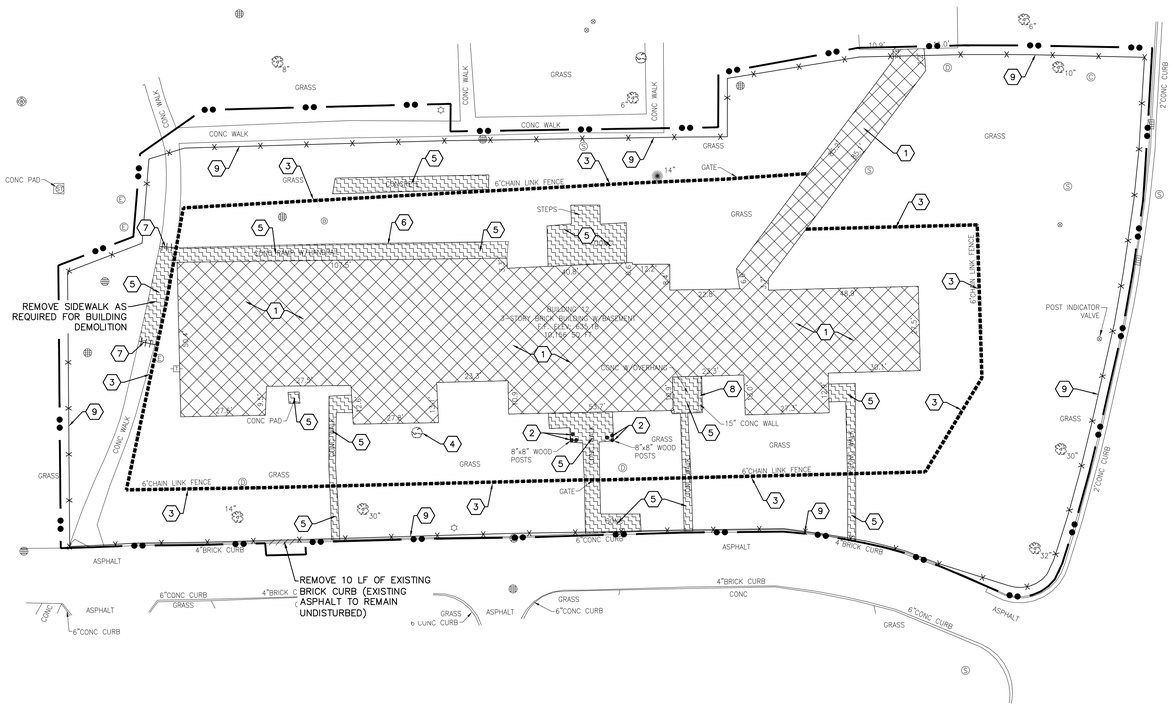

SITE DEMOLITION PLAN

1" = 20'

0' 10' 20' 40'

GENERAL NOTES

1. ALL WORK TO CONFORM TO FEDERAL, STATE AND LOCAL REGULATIONS.
2. CONTRACTOR SHALL KEEP ADJOINING PROPERTIES CLEAN OF CONSTRUCTION DEBRIS AND CONSTRUCTION TRAFFIC AT ALL TIMES.
3. CLEAR AND GRUB ALL TREES AND VEGETATION NECESSARY FOR CONSTRUCTION.
4. PROTECT TREES TO REMAIN DURING CONSTRUCTION. PROVIDE TREE PROTECTION FENCING AT THE TREE DRIP LINE.
5. STORAGE OF MATERIALS AND PARKING OF EQUIPMENT AND VEHICLES BELOW TREE CANOPIES WITHIN THE TREE DRIP LINE IS PROHIBITED.
6. THE CONTRACTOR SHALL REMOVE AND DISPOSE OF ALL EXISTING STRUCTURES, FENCES, CONCRETE, ASPHALT PAVEMENT AND OTHER MISCELLANEOUS APPURTENANCES ON SITE, UNLESS NOTED TO REMAIN ON THE CONTRACT DRAWINGS.
7. THE USE OF ANY TYPE OF EXPLOSIVES WILL NOT BE PERMITTED.
8. CONDUCT DEMOLITION AND CONSTRUCTION OPERATIONS TO ENSURE MINIMAL INTERFERENCE WITH STREETS, WALKS AND OTHER ADJACENT OCCUPIED FACILITIES.
9. DO NOT CLOSE OR OBSTRUCT STREETS, WALKS OR OTHER OCCUPIED FACILITIES WITHOUT PERMISSION FROM THE LOCAL AUTHORITIES HAVING JURISDICTION. PROVIDE ALTERNATE ROUTES AROUND CLOSED OR OBSTRUCTED TRAFFIC WAYS, IF REQUIRED BY GOVERNING AUTHORITIES.
10. ENSURE SAFE PASSAGE OF PERSONS AROUND AREAS OF DEMOLITION AND CONSTRUCTION. CONDUCT OPERATIONS TO PREVENT DAMAGE TO ADJACENT STRUCTURES AND OTHER FACILITIES AND INJURY TO PERSONS.
11. PROMPTLY REPAIR DAMAGE TO ADJACENT FACILITIES CAUSED BY DEMOLITION AND CONSTRUCTION OPERATIONS.
12. ALL UTILITY INFORMATION SHALL BE VERIFIED BY THE CONTRACTOR. CALL "JULIE", THE ILLINOIS ONE-CALL SYSTEM (811) FOR MARKING OF UNDERGROUND UTILITY LOCATIONS. NOTIFY AMERICAN STRUCTUREPOINT IF ANY VARIATION EXISTS.
13. MAINTAIN EXISTING UTILITIES TO REMAIN IN SERVICE AND PROTECT AGAINST DAMAGE DURING DEMOLITION AND CONSTRUCTION OPERATIONS. ANY UTILITY OUTAGE REQUIRES A MINIMUM 14 DAY NOTICE TO THE CONTRACTING OFFICER.
14. ALL UTILITIES TO BE REMOVED SHALL BE DISCONNECTED AND CAPPED AT THE NEAREST CONNECTION POINT. ANY UTILITIES UNDER ROADWAYS TO BE CAPPED, NOT REMOVED. UTILITIES SHALL BE CAPPED IN ACCORDANCE WITH THE GUIDELINES OF AUTHORITY HAVING JURISDICTION.
15. THE CONTRACTOR SHALL PROTECT AND NOT DESTROY THE BASE SURVEY CONTROL POINTS DURING DEMOLITION AND CONSTRUCTION.
16. CONTRACTOR SHALL SAVE AS MANY TREES AS POSSIBLE, AS INDICATED ON THE DRAWINGS.
17. DEMOLITION OF ELECTRIC LINES SHALL MEET UTILITY AGENCY REQUIREMENTS.

SHEET KEYNOTES

1. EXISTING BUILDING AND FOUNDATION TO BE REMOVED (BACKFILL BASEMENT WITH STRUCTURAL FILL, REFER TO SPECIFICATIONS) (REFER TO ARCHITECTURAL PLANS FOR BUILDING DEMOLITION)
2. EXISTING WOOD POSTS TO BE REMOVED
3. EXISTING CHAIN-LINK FENCE AND GATES TO BE SALVAGED AND RETURNED TO THE OWNER.
4. EXISTING TREE TO BE REMOVED.
5. CONCRETE PADS, SIDEWALKS, AND OTHER MISCELLANEOUS SITE CONCRETE AND BASE TO BE REMOVED AS NOTED.
6. EXISTING HANDRAIL TO BE REMOVED.
7. SAWCUT TO FULL DEPTH OF PAVEMENT.
8. CONCRETE WALL TO BE REMOVED.
9. 6' CHAIN-LINK, TEMPORARY CONSTRUCTION FENCE WITH PRIVACY SCREEN

DEMOLITION LEGEND

- BUILDING TO BE REMOVED
- DEMOLITION OF CONCRETE
- FENCE TO BE REMOVED
- PAVEMENT SAWCUT
- CURB REMOVAL
- LIMITS OF WORK
- 6' CHAIN LINK TEMPORARY CONSTRUCTION FENCE

EXISTING LEGEND

	STEAM MANHOLE		HOSE BIB
	CURB INLET		WATER METER
	DRAINAGE INLET		VENT
	CLEAN OUT		BUSH
	COMBINATION MANHOLE		CONIFEROUS TREE
	SANITARY MANHOLE		DECIDUOUS TREE
	DRAINAGE MANHOLE		
	LID		
	GUARD POST	EU	UNDERGROUND ELECTRIC LINE
	SIGN	FO	BURIED FIBER OPTIC LINE
	ELECTRIC METER	G	UNDERGROUND GAS
	ELECTRIC MANHOLE	S	UNDERGROUND STEAM LINE
	LIGHT POLE	T	UNDERGROUND COMMUNICATIONS
	TRANSFORMER	W	UNDERGROUND WATER LINE
	GAS METER	SS	SANITARY SEWER
	VALVE (GAS & WATER)	SD	STORM SEWER
	TERMITE BAIT SYSTEM	TR	TOP OF RIM ELEVATION
	TELEPHONE MANHOLE	INV	INVERT ELEVATION
	TELEPHONE PEDESTAL	VCP	VITRIFIED CLAY PIPE
	TELEPHONE BOX		
	FIRE VALVE SHUT OFF		

NOTE:
CONTRACTOR TO VERIFY LOCATION AND DEPTH OF EXISTING UTILITIES PRIOR TO COMMENCING ANY CONSTRUCTION. CONTACT ENGINEER IF VARIATION EXISTS.

CAUTION !!
THE LOCATIONS OF ALL EXISTING UNDERGROUND UTILITIES SHOWN ON THIS PLAN ARE BASED UPON ABOVE GROUND EVIDENCE (including, but not limited to, manholes, inlets, valves, and marks made upon the ground by others) AND ARE SPECULATIVE IN NATURE. THERE MAY ALSO BE OTHER EXISTING UNDERGROUND UTILITIES FOR WHICH THERE IS NO ABOVE GROUND EVIDENCE OR FOR WHICH NO ABOVE GROUND EVIDENCE WAS OBSERVED. THE EXACT LOCATIONS OF SAID EXISTING UNDERGROUND UTILITIES SHALL BE VERIFIED BY THE CONTRACTOR PRIOR TO ANY AND ALL CONSTRUCTION.

NOTE:
SITE UTILITIES SHOWN FOR REFERENCE ONLY. REFER TO UTILITY DEMOLITION PLAN (12-CD-102) FOR MORE DETAILED INFORMATION.

100% CONSTRUCTION DOCUMENTS

Revisions:	Date

CONSULTANTS:
Applied Engineering Services
9100 Keystone Crossing, Suite 200
Indianapolis, IN 46240

ARCHITECT/ENGINEERS:
AMERICAN STRUCTUREPOINT INC.
7260 Shadeland Station | Indianapolis, Indiana 46256
TEL 317.547.5580 | FAX 317.543.0270
www.structurepoint.com

Drawing Title: SITE DEMOLITION PLAN
Approved: Project Director
Project Title: VA Medical Center, Illiana Healthcare System, Demolish Buildings 12, 26, 40, and 74
Location: Danville, Illinois
Date: 2014-12-12
Checked: RLN / SAC
Drawn: JLG
Project Number: 550-11-116
Building Number: 12
Drawing Number: 12-CD-101
Dwg. 5 of 36

Office of Construction and Facilities Management
VA U.S. Department of Veterans Affairs

VA FORM 08-6231

P:\2010\00629\D. Drawings\0004\Civil\Plan Set\05_550-11-116-12-CD-101.dwg 15-Dec-14 4:48 PM emiller

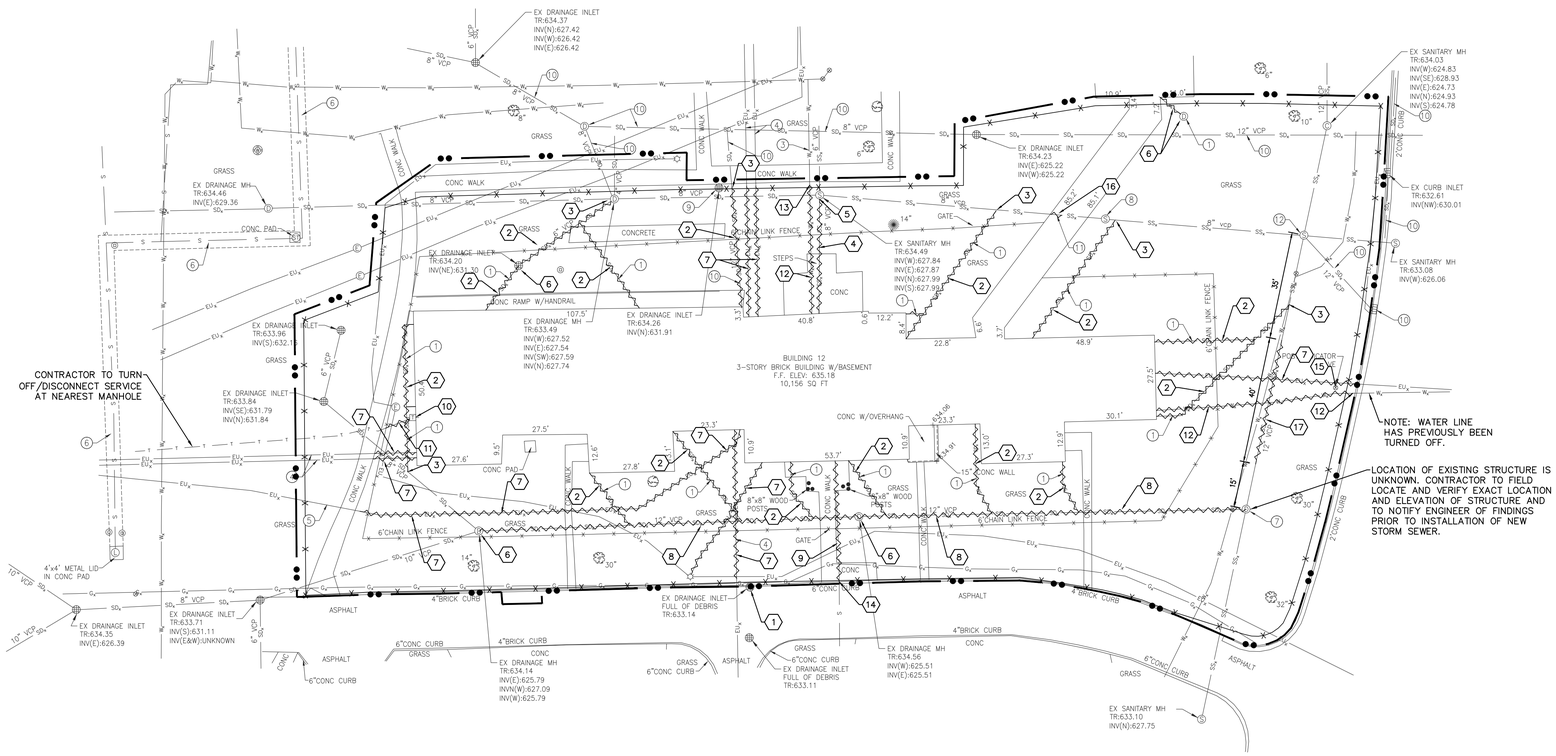

UTILITY DEMOLITION PLAN

1" = 20'

0' 10' 20' 40'

NOTE:
CONTRACTOR TO VERIFY LOCATION AND DEPTH OF EXISTING UTILITIES PRIOR TO COMMENCING ANY CONSTRUCTION. CONTACT ENGINEER IF VARIATION EXISTS.

CAUTION !!
THE LOCATIONS OF ALL EXISTING UNDERGROUND UTILITIES SHOWN ON THIS PLAN ARE BASED UPON ABOVE GROUND EVIDENCE (including, but not limited to, manholes, inlets, valves, and marks made upon the ground by others) AND ARE SPECULATIVE IN NATURE. THERE MAY ALSO BE OTHER EXISTING UNDERGROUND UTILITIES FOR WHICH THERE IS NO ABOVE GROUND EVIDENCE OR FOR WHICH NO ABOVE GROUND EVIDENCE WAS OBSERVED. THE EXACT LOCATIONS OF SAID EXISTING UNDERGROUND UTILITIES SHALL BE VERIFIED BY THE CONTRACTOR PRIOR TO ANY AND ALL CONSTRUCTION.

NOTE:
UTILITIES THAT ARE ABANDONED IN PLACE MUST BE PROPERLY CAPPED, GROUTED OR TERMINATED. PLASTIC PIPE AND CONDUIT MAY BE CAPPED. CONCRETE AND CLAY PIPES SHALL BE GROUTED SOLID. GROUTING SHALL EXTEND INTO PIPE A DISTANCE OF SUFFICIENT LENGTH TO RESIST FORCES ON THE GROUT

GENERAL NOTES

1. ALL WORK TO CONFORM TO FEDERAL, STATE AND LOCAL REGULATIONS.
2. CONTRACTOR SHALL KEEP ADJOINING PROPERTIES CLEAN OF CONSTRUCTION DEBRIS AND CONSTRUCTION TRAFFIC AT ALL TIMES.
3. CLEAR AND GRUB ALL TREES AND VEGETATION NECESSARY FOR CONSTRUCTION.
4. PROTECT TREES TO REMAIN DURING CONSTRUCTION. PROVIDE TREE PROTECTION FENCING AT THE TREE DRIP LINE.
5. STORAGE OF MATERIALS AND PARKING OF EQUIPMENT AND VEHICLES BELOW TREE CANOPIES WITHIN THE TREE DRIP LINE IS PROHIBITED.
6. THE CONTRACTOR SHALL REMOVE AND DISPOSE OF ALL EXISTING STRUCTURES, FENCES, CONCRETE, ASPHALT PAVEMENT AND OTHER MISCELLANEOUS APPURTENANCES ON SITE, UNLESS NOTED TO REMAIN ON THE CONTRACT DRAWINGS.
7. THE USE OF ANY TYPE OF EXPLOSIVES WILL NOT BE PERMITTED.
8. CONDUCT DEMOLITION AND CONSTRUCTION OPERATIONS TO ENSURE MINIMAL INTERFERENCE WITH STREETS, WALKS AND OTHER ADJACENT OCCUPIED FACILITIES.
9. DO NOT CLOSE OR OBSTRUCT STREETS, WALKS OR OTHER OCCUPIED FACILITIES WITHOUT PERMISSION FROM THE LOCAL AUTHORITIES HAVING JURISDICTION. PROVIDE ALTERNATE ROUTES AROUND CLOSED OR OBSTRUCTED TRAFFIC WAYS, IF REQUIRED BY GOVERNING AUTHORITIES.
10. ENSURE SAFE PASSAGE OF PERSONS AROUND AREAS OF DEMOLITION AND CONSTRUCTION. CONDUCT OPERATIONS TO PREVENT DAMAGE TO ADJACENT STRUCTURES AND OTHER FACILITIES AND INJURY TO PERSONS.
11. PROMPTLY REPAIR DAMAGE TO ADJACENT FACILITIES CAUSED BY DEMOLITION AND CONSTRUCTION OPERATIONS.
12. ALL UTILITY INFORMATION SHALL BE VERIFIED BY THE CONTRACTOR. CALL "JULIE", THE ILLINOIS ONE-CALL SYSTEM (811) FOR MARKING OF UNDERGROUND UTILITY LOCATIONS. NOTIFY AMERICAN STRUCTUREPOINT IF ANY VARIATION EXISTS.
13. MAINTAIN EXISTING UTILITIES TO REMAIN IN SERVICE AND PROTECT AGAINST DAMAGE DURING DEMOLITION AND CONSTRUCTION OPERATIONS. ANY UTILITY OUTAGE REQUIRES A MINIMUM 14 DAY NOTICE TO THE CONTRACTING OFFICER.
14. ALL UTILITIES TO BE REMOVED SHALL BE DISCONNECTED AND CAPPED AT THE NEAREST CONNECTION POINT. ANY UTILITIES UNDER ROADWAYS TO BE CAPPED, NOT REMOVED. UTILITIES SHALL BE CAPPED IN ACCORDANCE WITH THE GUIDELINES OF AUTHORITY HAVING JURISDICTION. COORDINATE REMOVAL AND DISCONNECTION OF UTILITIES WITH APPROPRIATE AUTHORITY.
15. THE CONTRACTOR SHALL PROTECT AND NOT DESTROY THE BASE SURVEY CONTROL POINTS DURING DEMOLITION AND CONSTRUCTION.
16. CONTRACTOR SHALL SAVE AS MANY TREES AS POSSIBLE, AS INDICATED ON THE DRAWINGS.
17. DEMOLITION OF ELECTRIC LINES SHALL MEET UTILITY AGENCY REQUIREMENTS.
18. ALL EXISTING STORM SEWER AND SANITARY SEWER LIDS AND CASTINGS TO BE SALVAGED TO THE VA.

SHEET KEYNOTES

1. CONTRACTOR SHALL CLEAN OUT AND REMOVE DEBRIS FROM EXISTING STORM SEWER STRUCTURE AND PIPE. NOTIFY ENGINEER IF ANY PIPE OR STRUCTURE DAMAGE IS FOUND.
2. EXISTING STORM SEWER TO BE REMOVED.
3. PLUG AND SEAL EXISTING STORM SEWER.
4. EXISTING SANITARY SEWER TO BE REMOVED.
5. PLUG AND SEAL EXISTING SANITARY SEWER.
6. EXISTING STORM SEWER STRUCTURE TO BE REMOVED (ALL EXISTING STORM SEWER LIDS TO BE SALVAGED TO THE VA).
7. EXISTING UNDERGROUND ELECTRIC TO BE REMOVED.
8. EXISTING STORM SEWER TO BE REMOVED AND REPLACED.
9. EXISTING STEAM LINE TO BE REMOVED.
10. EXISTING COMMUNICATIONS PEDESTAL TO BE REMOVED.
11. EXISTING COMMUNICATIONS LINE TO BE REMOVED.
12. EXISTING WATER LINE TO BE REMOVED.
13. CAP AND SEAL EXISTING WATER LINE.
14. CAP AND SEAL EXISTING STEAM LINE.
15. EXISTING WATER VALVE TO BE REMOVED.
16. REMOVE EXISTING DROP IN SANITARY SEWER WITHIN EXISTING CRAWL SPACE OF EXISTING BUILDING, CURRENTLY SERVING BUILDING 11. REPLACE WITH NEW PVC SDR 35 PIPE AS REQUIRED AND RECONNECT TO EXISTING VCP.
17. POTENTIAL OBSTRUCTION IN EXISTING 12" VCP SANITARY SEWER. CONTRACTOR SHALL REMOVE 40 LF OF EXISTING PIPE AS SHOWN AND REPLACE WITH NEW 12" PVC SDR 35. MATCH EXISTING PIPE SLOPES.

DEMOLITION LEGEND

- UTILITY TO BE REMOVED
- LIMITS OF WORK
- 6' CHAIN LINK TEMPORARY CONSTRUCTION FENCE

EXISTING LEGEND

- STEAM MANHOLE
- CURB INLET
- DRAINAGE INLET
- CLEAN OUT
- COMBINATION MANHOLE
- SANITARY MANHOLE
- DRAINAGE MANHOLE
- LID
- GUARD POST
- SIGN
- ELECTRIC METER
- ELECTRIC MANHOLE
- LIGHT POLE
- TRANSFORMER
- GAS METER
- VALVE (GAS & WATER)
- TERMITE BAIT SYSTEM
- TELEPHONE MANHOLE
- TELEPHONE PEDESTAL
- TELEPHONE BOX
- FIRE VALVE SHUT OFF
- HOSE BIB
- WATER METER
- VENT
- BUSH
- CONIFEROUS TREE
- DECIDUOUS TREE

- UNDERGROUND ELECTRIC LINE
- BURIED FIBER OPTIC LINE
- UNDERGROUND GAS
- UNDERGROUND STEAM LINE
- UNDERGROUND COMMUNICATIONS
- UNDERGROUND WATER LINE
- SANITARY SEWER
- STORM SEWER
- TR — TOP OF RIM ELEVATION
- INV — INVERT ELEVATION
- VCP — VITRIFIED CLAY PIPE

1. POSSIBLE 4" ROOF DRAIN COLLECTOR PER RECORD DRAWING 12-2 PLUMBING ALTERATIONS TO BUILDING NO. 12, DATED OCTOBER 6, 1934.
2. POSSIBLE BLIND TIE TO SANITARY SEWER PER RECORD DRAWING 12-2 PLUMBING ALTERATIONS FOR BUILDING NO. 12, DATED OCTOBER 6, 1934.
3. POSSIBLE WATER LINE PER RECORD DRAWING NO. E-3B OF AIR CONDITIONING FOR BUILDINGS 11 AND 12, DATED FEBRUARY 23, 1977.
4. POSSIBLE ELECTRIC DUCTS (CONCRETE ENCASED, 3-3" DUCTS) PER RECORD DRAWING NO. E-3B OF AIR CONDITIONING FOR BUILDINGS 11 AND 12, DATED FEBRUARY 23, 1977.
5. POSSIBLE ELECTRIC LINE PER RECORD DRAWING NO. E-3B OF AIR CONDITIONING FOR BUILDINGS 11 AND 12, DATED FEBRUARY 23, 1977.
6. POSSIBLE STEAM TUNNEL PER RECORD DRAWING NO. E-3B OF AIR CONDITIONING FOR BUILDINGS 11 AND 12, DATED FEBRUARY 23, 1977.
7. POSSIBLE STORM STRUCTURE, PER CAD FILE PROVIDED BY THE VA AND FIELD INVESTIGATION PERFORMED BY THE VA.
8. POSSIBLE SANITARY STRUCTURE, PER CAD FILE PROVIDED BY THE VA. (CONTRACTOR TO FIELD VERIFY SIZE AND DEPTH PRIOR TO CONSTRUCTION)
9. ABANDONED MANHOLE PER FIELD INVESTIGATION PERFORMED BY THE VA.
10. STORM SEWER INFORMATION PER FIELD INVESTIGATION PERFORMED BY THE VA.
11. EXISTING COMBINED SEWER DROPS WITHIN THE CRAWL SPACE OF BUILDING. PER FIELD INVESTIGATION PERFORMED BY THE VA. EXACT PIPE INVERT ELEVATIONS AT DROP ARE UNKNOWN.
12. SANITARY SEWER MANHOLE PER FIELD INVESTIGATION PERFORMED BY THE VA.

100% CONSTRUCTION DOCUMENTS

Revisions:	Date

CONSULTANTS:

Applied Engineering Services
9100 Keystone Crossing, Suite 200
Indianapolis, IN 46240

ARCHITECT/ENGINEERS:

AMERICAN STRUCTUREPOINT INC.
7260 Shadeland Station | Indianapolis, Indiana 46256
TEL 317.547.5580 | FAX 317.543.0270
www.structurepoint.com

Drawing Title: UTILITY DEMOLITION PLAN

Approved: Project Director

Project Title: VA Medical Center, Illiana Healthcare System, Demolish Buildings 12, 26, 40, and 74

Location: Danville, Illinois

Date: 2014-12-12 | Checked: RLN / SAC | Drawn: JLG

Project Number: 550-11-116

Building Number: 12

Drawing Number: 12-CD-102

Dwg. 6 of 36

Office of Construction and Facilities Management

VA U.S. Department of Veterans Affairs

VA FORM 08-6231

P:\2010\00629\D_Drawings\0004\Civil\Plan Set\06_550-11-116-12-CD-102.dwg 12-15-14 04:48:37 PM emiller

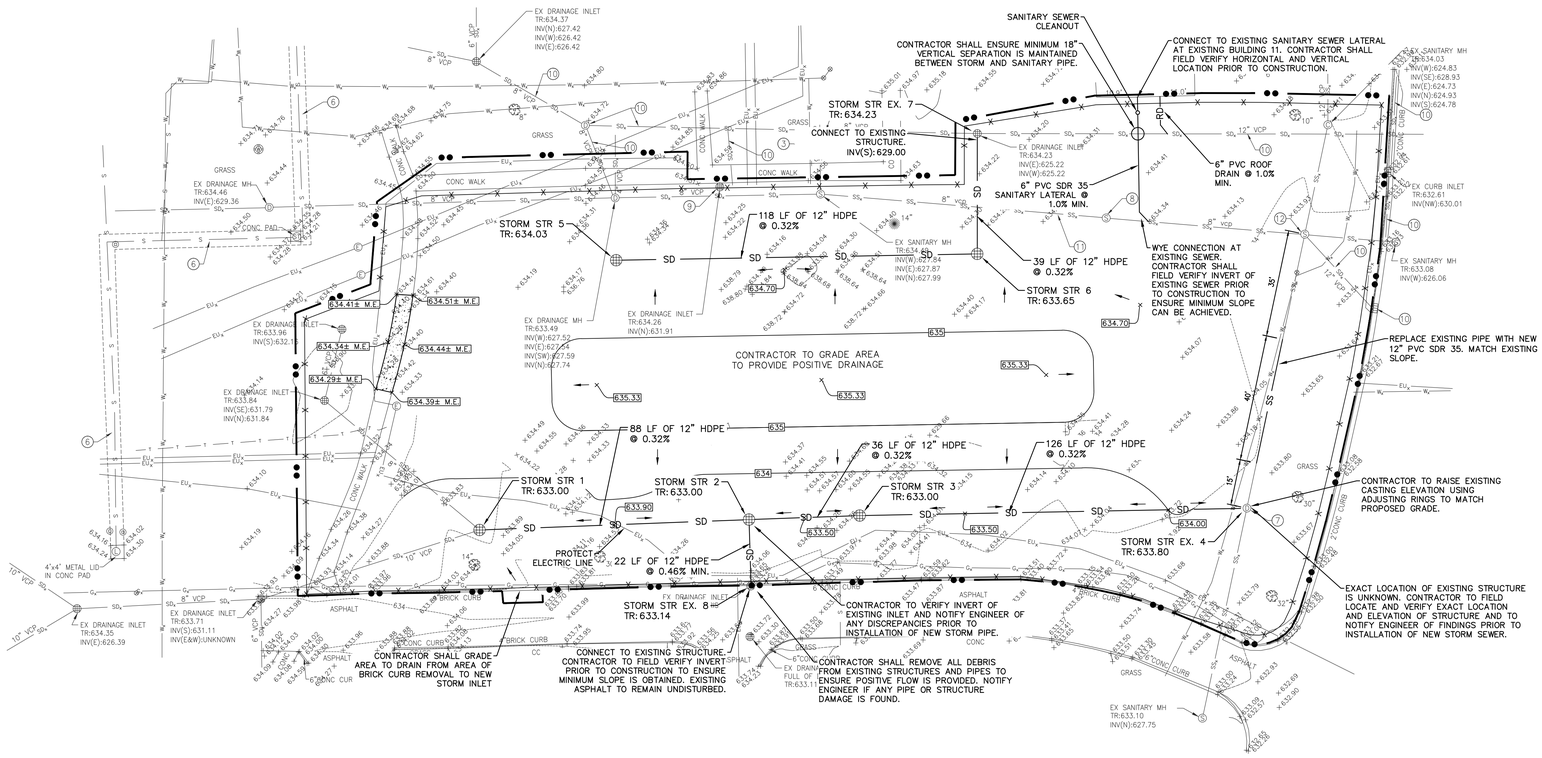

GENERAL NOTES

1. ALL WORK TO CONFORM TO FEDERAL, STATE AND LOCAL REGULATIONS.
2. CONTRACTOR SHALL KEEP ADJOINING PROPERTIES CLEAN OF CONSTRUCTION DEBRIS AND CONSTRUCTION TRAFFIC AT ALL TIMES.
3. THE CONTRACTOR SHALL PROTECT AND NOT DESTROY THE BASE SURVEY CONTROL POINTS DURING DEMOLITION AND CONSTRUCTION.
4. ALL DIMENSIONS ARE TO THE EDGE OF PAVEMENT OR FACE OF CURB, UNLESS NOTED OTHERWISE.
5. ALL DIMENSIONS ARE TO FACE OF BRICK OR FACING MATERIAL, WHERE APPLICABLE.
6. ALL DIMENSIONS ARE PARALLEL WITH, OR PERPENDICULAR TO BASE LINES, PROPERTY LINES OR BUILDING LINES, UNLESS OTHERWISE NOTED.
7. THE CONTRACTOR SHALL VERIFY ALL DIMENSIONS IN THE FIELD PRIOR TO THE START OF CONSTRUCTION. THE CONTRACTOR SHALL BE RESPONSIBLE FOR ALL FIELD DIMENSIONS. IF ANY DISCREPANCIES ARE FOUND IN THESE PLANS FROM ACTUAL FIELD CONDITIONS, THE CONTRACTOR SHALL NOTIFY AMERICAN STRUCTUREPOINT IMMEDIATELY.
8. PROVIDE SMOOTH TRANSITIONS FROM NEW AREAS TO EXISTING FEATURES AS NECESSARY.
9. RESURFACE OR RECONSTRUCT AT LEAST TO ORIGINAL CONDITIONS ALL AREAS WHERE THE EXISTING PAVEMENT OR LAWNS ARE DAMAGED DURING CONSTRUCTION FROM TRAFFIC BY CONTRACTORS, SUBCONTRACTORS OR SUPPLIERS AFTER CONSTRUCTION WORK IS COMPLETE.
10. EXISTING PAVEMENT TO BE SAW CUT IN ALL AREAS WHERE INDICATED NEW PAVEMENT TO JOIN EXISTING.
11. THE EDGE OF THE EXISTING ASPHALT PAVEMENT SHALL BE PROPERLY SEALED WITH A TACK COAT MATERIAL IN ALL AREAS WHERE NEW ASPHALT PAVEMENT IS INDICATED TO JOIN EXISTING ASPHALT.
12. CONCRETE SAW CUTTING SHOULD NOT OCCUR UNTIL THE CONCRETE CAN BE SAWED WITHOUT UNACCEPTABLE RAVELING AND CAN SUPPORT WEIGHT. SAW CUTTING SHOULD BE PERFORMED AS SOON AS RAVELING STOPS BASED ON TRIAL CUTS. PROVIDE A NEAT CUT WHICH IS TRUE IN ALIGNMENT.
13. ALL JOINTS ARE TO CONTINUE THROUGH THE CURB.
14. RADIAL JOINTS SHALL BE NO SHORTER THAN 1.5'.
15. CONTRACTOR SHALL USE A THICKENED EXPANSION JOINT AROUND THE PERIMETER OF ANY BLOCK OUT IN THE CONCRETE PAVING.
16. ALL CONSTRUCTION JOINTS SHALL BE SAWN, CLEANED OF DEBRIS, BLOWN DRY AND SEALED WITH THE APPROPRIATE SEALANT ACCORDING TO MANUFACTURES DIRECTIONS.
17. ALL ASPHALT TO BE IN ACCORDANCE WITH ILLINOIS D.O.T. STANDARD SPECIFICATIONS RELATIVE TO MATERIAL, MIX, PLACEMENT AND WORKMANSHIP.
18. ALL SIDEWALKS SHALL COMPLY WITH ADA STANDARDS. MAXIMUM CROSS SLOPE OF ¼" PER FOOT AND MAXIMUM LONGITUDINAL SLOPE OF 1:20.
19. CHAMFER ALL ENDS OF CURBS.
20. SANITARY SEWER PIPE SHALL HAVE A MINIMUM 4' OF COVER. CONTRACTOR SHALL MINIMIZE DOWNTIME OF SANITARY SERVICE TO BUILDING 11 AND COORDINATE WITH COTR.

LEGEND

—— ●● ——	LIMITS OF WORK
—— X —— X ——	6' CHAIN LINK TEMPORARY CONSTRUCTION FENCE
M.E.	MATCH EXISTING
TR	TOP OF RIM
—— 000 ——	CONTOURS
000.00 ×	SPOT ELEVATION
—— SD ——	STORM SEWER
	DRAINAGE INLET
Ⓓ	DRAINAGE MANHOLE
Ⓢ	SANITARY MANHOLE
—— SS ——	SANITARY SEWER

STRUCTURE DATA TABLE

STR. NO.	STRUCTURE AND CASTING TYPE	TOP OF RIM	INVERT	SIZE	DIRECTION	REMARKS
1	TYPE 'C' MANHOLE W/INLET GRATE	633.00	625.79 627.09 625.79	12" 8" 12"	W NW E	
2	TYPE 'C' MANHOLE W/INLET GRATE	633.00	625.51 625.51 625.51	12" 12" 12"	W S E	
3	TYPE 'C' MANHOLE W/INLET GRATE	633.00	625.39 625.39	12" 12"	W E	
4	EXISTING STRUCTURE	633.80	624.99 624.89 624.89	12" 12" 12"	W N S	CONTRACTOR TO FIELD VERIFY EXISTING PIPE ELEVATIONS PRIOR TO CONSTRUCTION. CORE EXISTING STRUCTURE FOR NEW PIPE CONNECTION.
5	TYPE 'C' MANHOLE W/INLET GRATE	634.03	629.60	12"	E	
6	TYPE 'C' MANHOLE W/INLET GRATE	633.65	629.22 629.12	12" 12"	W N	
7	EXISTING STRUCTURE	634.23	629.00	12"	S	CONTRACTOR TO FIELD VERIFY EXISTING PIPE ELEVATIONS PRIOR TO CONSTRUCTION. CORE EXISTING STRUCTURE FOR NEW PIPE CONNECTION.
8	EXISTING STRUCTURE	633.14	625.61*	12"	N	CONTRACTOR TO FIELD VERIFY EXISTING PIPE ELEVATIONS PRIOR TO CONSTRUCTION. CORE EXISTING STRUCTURE FOR NEW PIPE CONNECTION.

* INVERT ELEVATION LISTED MAY BE ADJUSTED IN FIELD BY CONTRACTOR AS NEEDED TO CONNECT TO EXISTING STRUCTURE NO. 8. SLOPE ON CONNECTING PIPE MUST BE A MINIMUM OF 0.32%

BENCHMARK INFORMATION (NAVD 1988)

BCA BENCHMARK 52
USNGS BM "C 300 1986"
TOP OF STEEL ROD IN UNITED STATES NATIONAL GEODETIC SURVEY VAULT WITH ACCESS CORNER STAMPED "C 300 1986" FOUND 22 FEET SOUTH OF THE SOUTH EDGE OF MAIN STREET AND 9 FEET EAST OF THE EAST EDGE OF THE EAST ACCESS DRIVE TO THE VETERANS ADMINISTRATION HOSPITAL, DANVILLE, VERMILION COUNTY, ILLINOIS.
ELEV– 640.71

BCA BENCHMARK 462
CHISELED SQUARE SET ON TOP OF THE NORTHEASTERLY SIDE OF A CONCRETE LIGHT POLE BASE, 225 FEET SOUTHEAST OF THE SOUTHEAST CORNER OF A TWO STORY BRICK BUILDING (VETERANS ADMINISTRATION BUILDING NUMBER 60) AND 16 FEET SOUTHWEST OF THE CENTERLINE OF VETERANS ADMINISTRATION ACCESS DRIVE, DANVILLE, VERMILION COUNTY, ILLINOIS.
ELEV – 632.65

DEVELOPMENT PLAN

1" = 20' 0' 10' 20' 40'

NOTE:
CONTRACTOR TO VERIFY LOCATION AND DEPTH OF EXISTING UTILITIES PRIOR TO COMMENCING ANY CONSTRUCTION. CONTACT ENGINEER IF VARIATION EXISTS.

CAUTION !!
THE LOCATIONS OF ALL EXISTING UNDERGROUND UTILITIES SHOWN ON THIS PLAN ARE BASED UPON ABOVE GROUND EVIDENCE (including, but not limited to, manholes, inlets, valves, and marks made upon the ground by others) AND ARE SPECULATIVE IN NATURE. THERE MAY ALSO BE OTHER EXISTING UNDERGROUND UTILITIES FOR WHICH THERE IS NO ABOVE GROUND EVIDENCE OR FOR WHICH NO ABOVE GROUND EVIDENCE WAS OBSERVED. THE EXACT LOCATIONS OF SAID EXISTING UNDERGROUND UTILITIES SHALL BE VERIFIED BY THE CONTRACTOR PRIOR TO ANY AND ALL CONSTRUCTION.

100% CONSTRUCTION DOCUMENTS

Revisions:	Date

CONSULTANTS:
Applied Engineering Services
9100 Keystone Crossing, Suite 200
Indianapolis, IN 46240

ARCHITECT/ENGINEERS:
AMERICAN STRUCTUREPOINT INC.
7260 Shadeland Station | Indianapolis, Indiana 46256
TEL 317.547.5580 | FAX 317.543.0270
www.structurepoint.com

Drawing Title: DEVELOPMENT PLAN
Approved: Project Director
Project Title: VA Medical Center, Illiana Healthcare System, Demolish Buildings 12, 26, 40, and 74
Project Number: 550-11-116
Building Number: 12
Location: Danville, Illinois
Date: 2014-12-12
Checked: RLN / SAC
Drawn: JLG
Drawing Number: 12-CS-101
Dwg. 7 of 36

Office of Construction and Facilities Management
VA U.S. Department of Veterans Affairs

VA FORM 08-6231

P:\2010\00629\D. Drawings\0004\Civil\Plan Set\07_550-11-116-12-CS-101.dwg 15-Dec-14 4:48 PM jgustafson

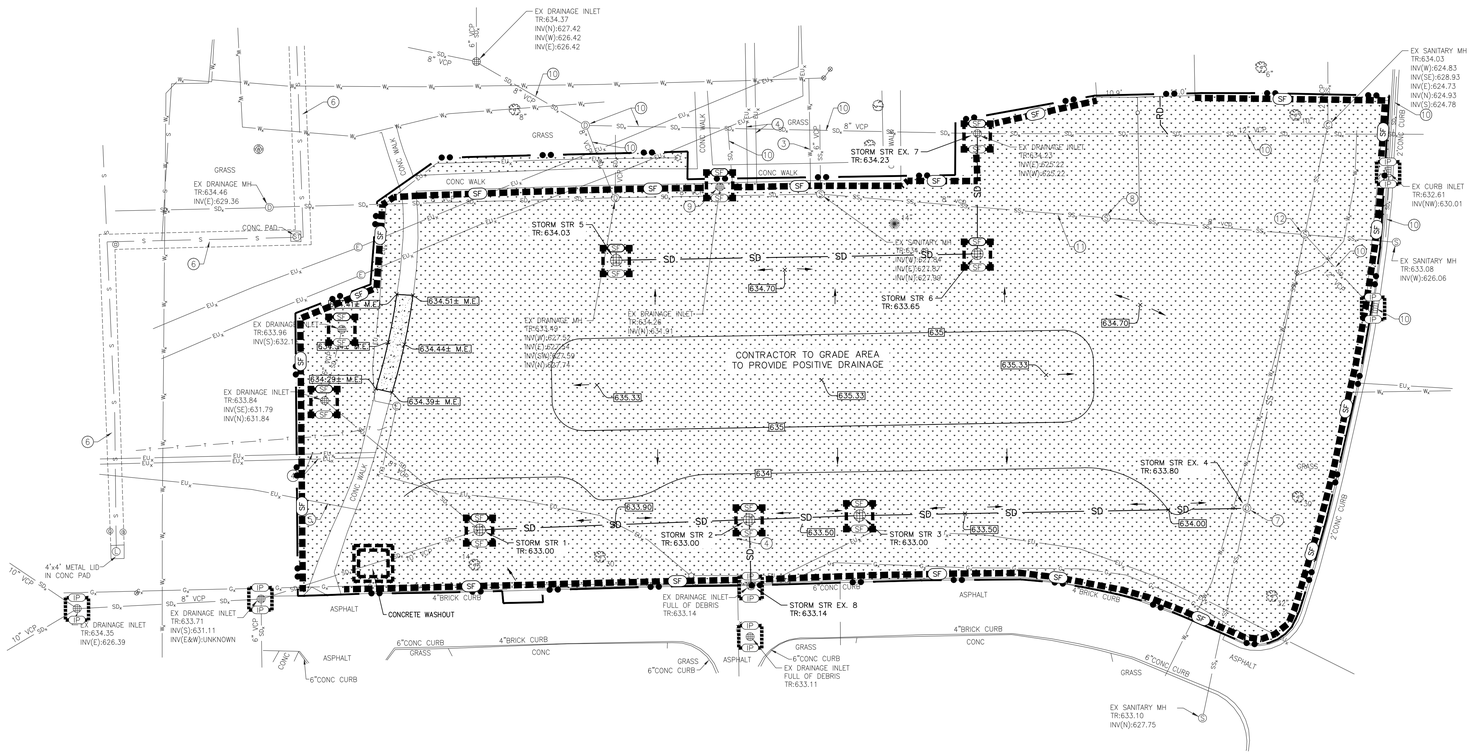

EROSION CONTROL PLAN

1" = 20'

0' 10' 20' 40'

GENERAL NOTES

1. ALL WORK TO CONFORM TO FEDERAL, STATE AND LOCAL REGULATIONS.
2. CONTRACTOR SHALL KEEP ADJOINING PROPERTIES CLEAN OF CONSTRUCTION DEBRIS AND CONSTRUCTION TRAFFIC AT ALL TIMES.
3. THE CONTRACTOR SHALL PROTECT AND NOT DESTROY THE BASE SURVEY CONTROL POINTS DURING DEMOLITION AND CONSTRUCTION.
4. ALL DIMENSIONS ARE TO THE EDGE OF PAVEMENT OR FACE OF CURB, UNLESS NOTED OTHERWISE.
5. ALL DIMENSIONS ARE TO FACE OF BRICK OR FACING MATERIAL, WHERE APPLICABLE.
6. ALL DIMENSIONS ARE PARALLEL WITH, OR PERPENDICULAR TO BASE LINES, PROPERTY LINES OR BUILDING LINES, UNLESS OTHERWISE NOTED.
7. THE CONTRACTOR SHALL VERIFY ALL DIMENSIONS IN THE FIELD PRIOR TO THE START OF CONSTRUCTION. THE CONTRACTOR SHALL BE RESPONSIBLE FOR ALL FIELD DIMENSIONS. IF ANY DISCREPANCIES ARE FOUND IN THESE PLANS FROM ACTUAL FIELD CONDITIONS, THE CONTRACTOR SHALL NOTIFY AMERICAN STRUCTUREPOINT IMMEDIATELY.
8. PROVIDE SMOOTH TRANSITIONS FROM NEW AREAS TO EXISTING FEATURES AS NECESSARY.
9. RESURFACE OR RECONSTRUCT AT LEAST TO ORIGINAL CONDITIONS ALL AREAS WHERE THE EXISTING PAVEMENT OR LAWNS ARE DAMAGED DURING CONSTRUCTION FROM TRAFFIC BY CONTRACTORS, SUBCONTRACTORS OR SUPPLIERS AFTER CONSTRUCTION WORK IS COMPLETE.
10. EXISTING PAVEMENT TO BE SAW CUT IN ALL AREAS WHERE INDICATED NEW PAVEMENT TO JOIN EXISTING.
11. THE EDGE OF THE EXISTING ASPHALT PAVEMENT SHALL BE PROPERLY SEALED WITH A TACK COAT MATERIAL IN ALL AREAS WHERE NEW ASPHALT PAVEMENT IS INDICATED TO JOIN EXISTING ASPHALT.
12. CONCRETE SAW CUTTING SHOULD NOT OCCUR UNTIL THE CONCRETE CAN BE SAWED WITHOUT UNACCEPTABLE RAVELING AND CAN SUPPORT WEIGHT. SAW CUTTING SHOULD BE PERFORMED AS SOON AS RAVELING STOPS BASED ON TRIAL CUTS. PROVIDE A NEAT CUT WHICH IS TRUE IN ALIGNMENT.
13. ALL JOINTS ARE TO CONTINUE THROUGH THE CURB.
14. RADIAL JOINTS SHALL BE NO SHORTER THAN 1.5'.
15. CONTRACTOR SHALL USE A THICKENED EXPANSION JOINT AROUND THE PERIMETER OF ANY BLOCK OUT IN THE CONCRETE PAVING.
16. ALL CONSTRUCTION JOINTS SHALL BE SAWN, CLEANED OF DEBRIS, BLOWN DRY AND SEALED WITH THE APPROPRIATE SEALANT ACCORDING TO MANUFACTURES DIRECTIONS.
17. ALL ASPHALT TO BE IN ACCORDANCE WITH ILLINOIS D.O.T. STANDARD SPECIFICATIONS RELATIVE TO MATERIAL, MIX, PLACEMENT AND WORKMANSHIP.
18. ALL SIDEWALKS SHALL COMPLY WITH ADA STANDARDS. MAXIMUM CROSS SLOPE OF ¼" PER FOOT AND MAXIMUM LONGITUDINAL SLOPE OF 1:20.
19. CHAMFER ALL ENDS OF CURBS.

LEGEND

- DROP-IN INLET PROTECTION
- SILT FENCE INLET PROTECTION
- SILT FENCE
- SEEDING
- LIMITS OF WORK

NOTE:
CONTRACTOR TO VERIFY LOCATION AND DEPTH OF EXISTING UTILITIES PRIOR TO COMMENCING ANY CONSTRUCTION. CONTACT ENGINEER IF VARIATION EXISTS.

CAUTION !!
THE LOCATIONS OF ALL EXISTING UNDERGROUND UTILITIES SHOWN ON THIS PLAN ARE BASED UPON ABOVE GROUND EVIDENCE (including, but not limited to, manholes, inlets, valves, and marks made upon the ground by others) AND ARE SPECULATIVE IN NATURE. THERE MAY ALSO BE OTHER EXISTING UNDERGROUND UTILITIES FOR WHICH THERE IS NO ABOVE GROUND EVIDENCE OR FOR WHICH NO ABOVE GROUND EVIDENCE WAS OBSERVED. THE EXACT LOCATIONS OF SAID EXISTING UNDERGROUND UTILITIES SHALL BE VERIFIED BY THE CONTRACTOR PRIOR TO ANY AND ALL CONSTRUCTION.

100% CONSTRUCTION DOCUMENTS

Revisions:	Date

CONSULTANTS:

Applied Engineering Services
9100 Keystone Crossing, Suite 200
Indianapolis, IN 46240

ARCHITECT/ENGINEERS:

AMERICAN STRUCTUREPOINT INC.
7260 Shadeland Station | Indianapolis, Indiana 46256
TEL 317.547.5580 | FAX 317.543.0270
www.structurepoint.com

Drawing Title: EROSION CONTROL PLAN

Approved: Project Director

Project Title: VA Medical Center, Illiana Healthcare System, Demolish Buildings 12, 26, 40, and 74

Location: Danville, Illinois

Date: 2014-12-12 | Checked: RLN / SAC | Drawn: JLG

Project Number: 550-11-116

Building Number: 12

Drawing Number: 12-CE-101

Dwg. 8 of 36

Office of Construction and Facilities Management

VA U.S. Department of Veterans Affairs

VA FORM 08-6231

P:\2010\00629\D. Drawings\0004\Civil\Plan Set\08_550-11-116-12-CE-101.dwg 15-Dec-14 4:49 PM jgustafson

P:\2010\00629\D. Drawings\0004\Civil\Plan Set\09_550-11-116-12-CS-501.dwg 15-Dec-14 4:49 PM rnixon

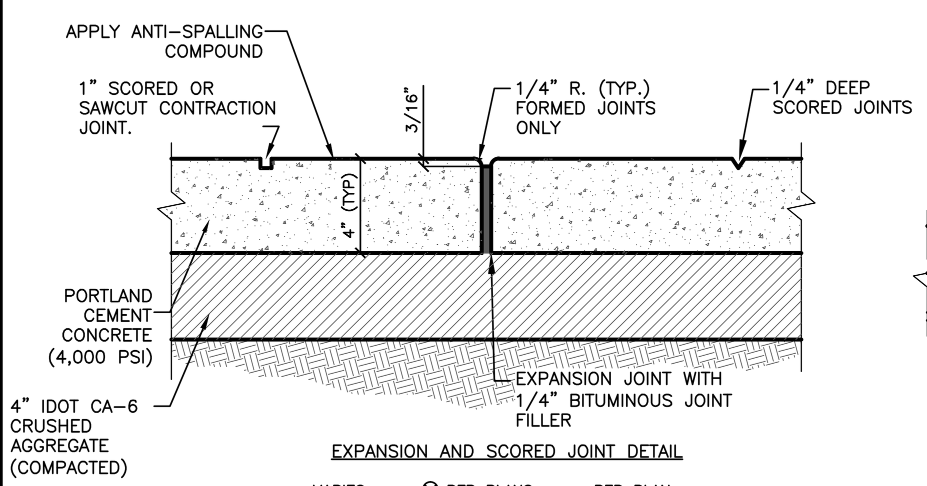

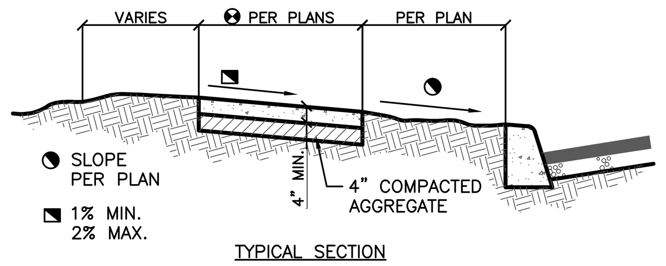

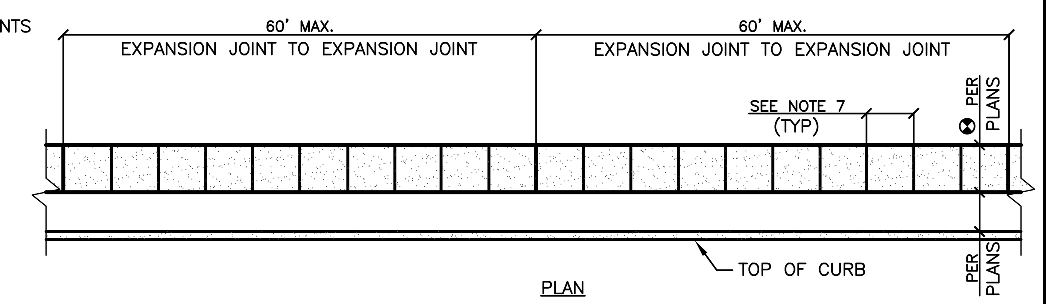

NOTES:

1. EXPANSION JOINTS SHALL BE LOCATED WHERE SIDEWALK ABUTS CONCRETE DRIVEWAYS, CURB, BUILDING, OR OTHER ADJACENT STRUCTURES.
2. ONE-HALF INCH BITUMINOUS JOINT FILLER SHALL BE INSTALLED AT EXPANSION JOINT LOCATIONS AND SHALL EXTEND THE FULL DEPTH OF THE CONCRETE.
3. 1" DEEP CONTRACTION JOINTS SHALL BE PLACED AT INTERVALS OF APPROXIMATELY 18' OR AT A SPACING THAT MATCHES THE ADJACENT CURB.
4. FORMED CONTRACTION JOINTS SHALL BE FINISHED WITH A TOOL HAVING A 1/4" RADIUS.
5. SCORED JOINTS SHALL BE 1/4" DEEP AND PLACED AT THE SPACING INDICATED FOR THE WIDTH OF SIDEWALK OR MATCH SCORED JOINTS OF ADJACENT CURB.
6. CONCRETE SHALL BE FINISHED BY MEANS OF A FLOAT, STEEL TROWELLED AND BROOMED WITH A FINE BRUSH IN A TRANSVERSE DIRECTION.
7. 1/4" DEEP SCORED JOINTS (TYP) SPACED AT 6' OR EQUAL TO SIDEWALK WIDTH.

CONCRETE SIDEWALK

SEASONAL SOIL PROTECTION CHART

STABILIZATION PRACTICE	JAN.	FEB.	MAR.	APR.	MAY	JUNE	JULY	AUG.	SEPT.	OCT.	NOV.	DEC.
PERMANENT SEEDING			A →	→	*////	////	////*	→	*/I/*			
DORMANT SEEDING	B →	→								B →	→	→
TEMPORARY SEEDING			C →	E	*////	////	////*	D →	→			

A = KENTUCKY BLUEGRASS 100 LBS./ACRE; CREEPING RED FESCUE 100 LBS./ACRE; HYDROSEEDED
B = KENTUCKY BLUEGRASS 120 LBS./ACRE; CREEPING RED FESCUE 120 LBS./ACRE; HYDROSEEDED
C = SPRING OATS 3 BUSHELS/ACRE
D = WHEAT OR RYE 2 BUSHELS/ACRE
E = ANNUAL RYE GRASS 40 LBS./ACRE (1 LB/1000 SQ. FT.)
/I/ = IRRIGATION NEEDED DURING JUNE, JULY, AUGUST AND/OR SEPTEMBER

SEASONAL SOIL PROTECTION

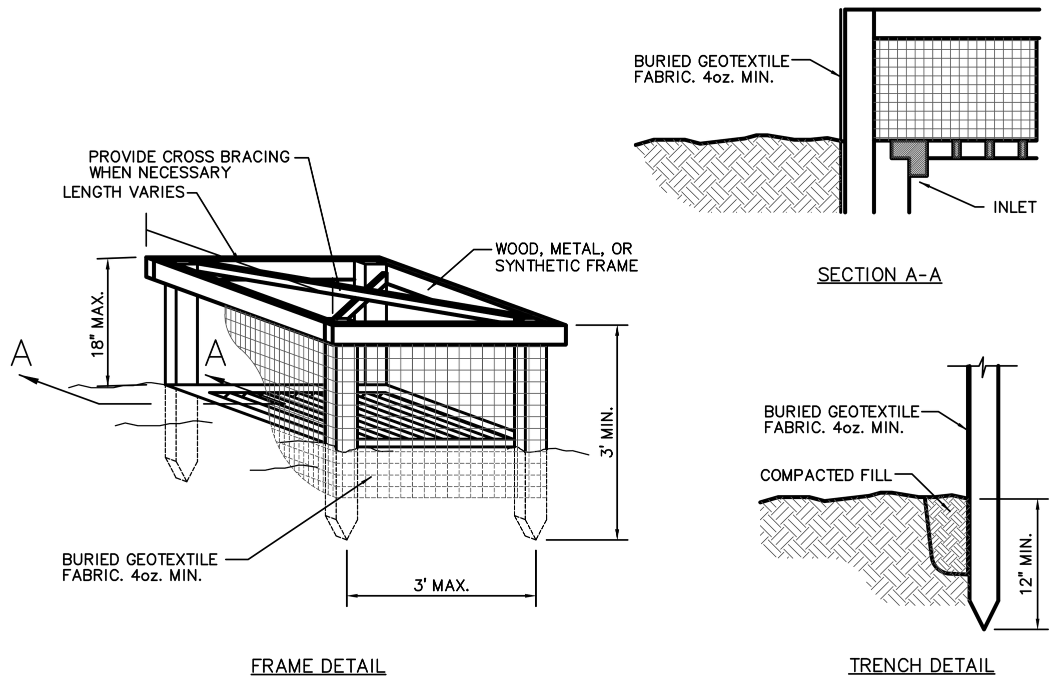

SILT FENCE INLET PROTECTION

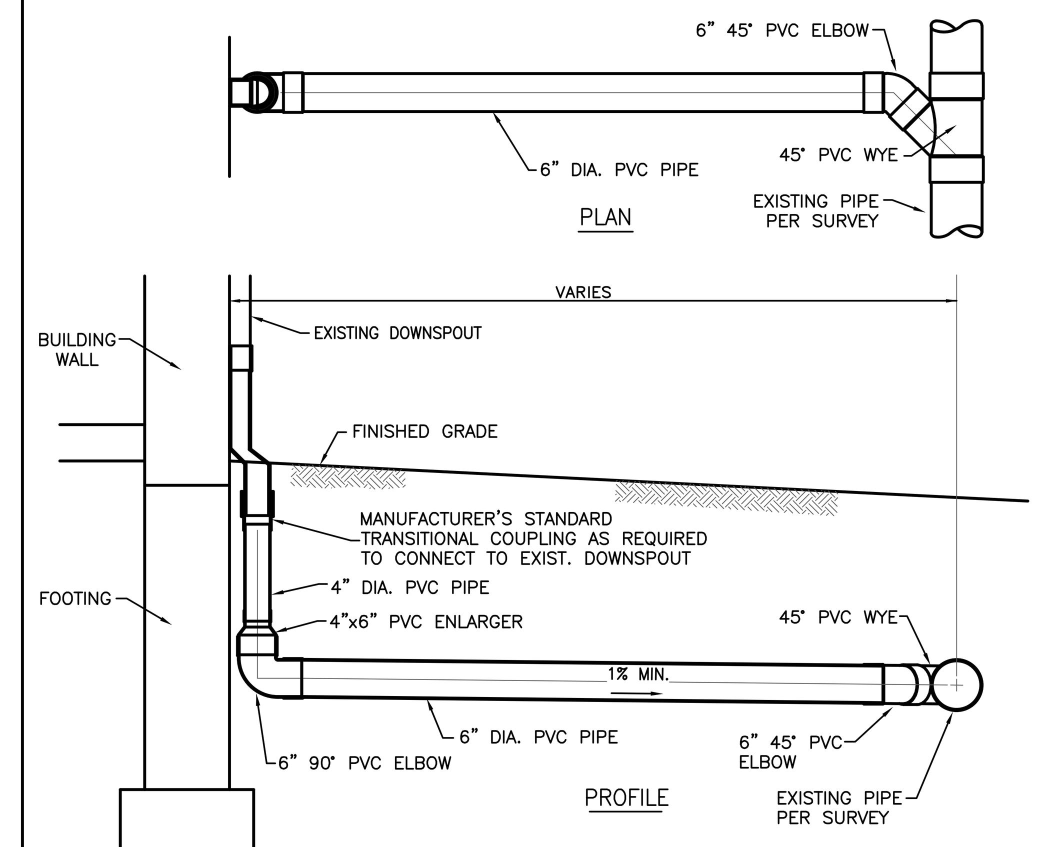

TYPICAL ROOF DRAIN COLLECTOR

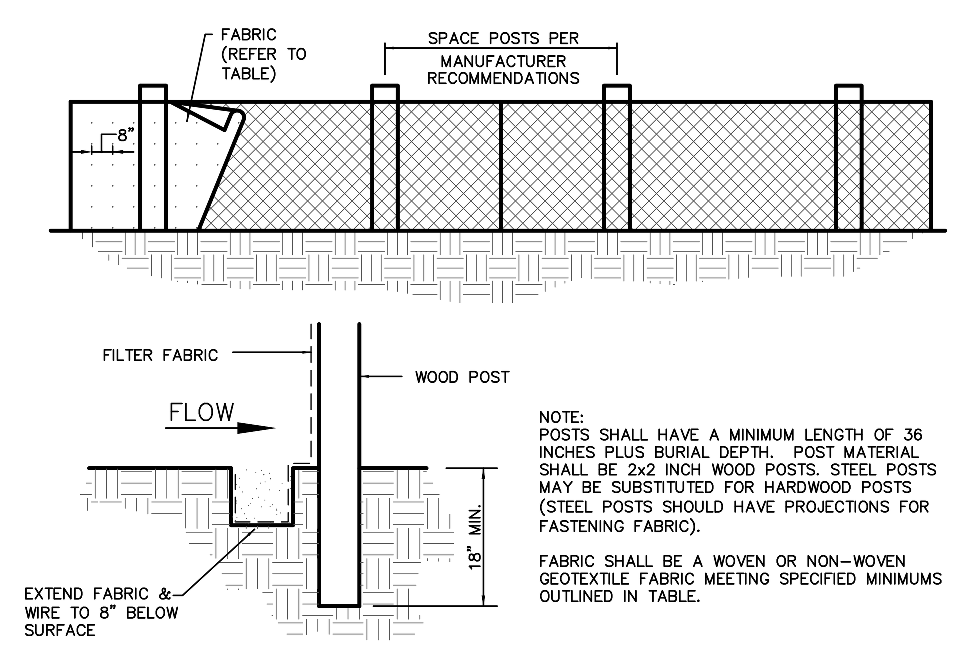

NOTE:
POSTS SHALL HAVE A MINIMUM LENGTH OF 36 INCHES PLUS BURIAL DEPTH. POST MATERIAL SHALL BE 2x2 INCH WOOD POSTS. STEEL POSTS MAY BE SUBSTITUTED FOR HARDWOOD POSTS (STEEL POSTS SHOULD HAVE PROJECTIONS FOR FASTENING FABRIC).

FABRIC SHALL BE A WOVEN OR NON-WOVEN GEOTEXTILE FABRIC MEETING SPECIFIED MINIMUMS OUTLINED IN TABLE.

SILT FENCE INSTALLATION REQUIREMENTS

SITE PREPARATION

1. PLAN FOR THE FENCE TO BE AT LEAST 10 ft. FROM THE TOE OF THE SLOPE TO PROVIDE A SEDIMENT STORAGE AREA.
2. PROVIDE ACCESS TO THE AREA IF SEDIMENT CLEANOUT WILL BE NEEDED.

FENCE CONSTRUCTION

1. LAY OUT THE LOCATION OF THE FENCE SO THAT IT IS PARALLEL TO THE CONTOUR OF THE SLOPE AND AT LEAST 10 FEET BEYOND THE TOE OF THE SLOPE TO PROVIDE A SEDIMENT STORAGE AREA. TURN THE ENDS OF THE FENCE UP SLOPE SUCH THAT THE POINT OF CONTACT BETWEEN THE GROUND AND THE BOTTOM OF THE FENCE END TERMINATES AT A HIGHER ELEVATION THAN THE TOP OF THE FENCE AT ITS LOWEST POINT.
2. EXCAVATE AN EIGHT-INCH DEEP BY FOUR-INCH WIDE TRENCH ALONG THE ENTIRE LENGTH OF THE FENCE LINE. INSTALLATION BY PLOWING IS ALSO ACCEPTABLE.
3. INSTALL THE SILT FENCE WITH THE FILTER FABRIC LOCATED ON THE UP-SLOPE SIDE OF THE EXCAVATED TRENCH AND THE SUPPORT POSTS ON THE DOWN-SLOPE SIDE OF THE TRENCH.
4. DRIVE THE SUPPORT POSTS AT LEAST 18 INCHES INTO THE GROUND, TIGHTLY STRETCHING THE FABRIC BETWEEN THE POSTS AS EACH IS DRIVEN INTO THE SOIL. A MINIMUM OF 12 INCHES OF THE FILTER FABRIC SHOULD EXTEND INTO THE TRENCH. (IF IT IS NECESSARY TO JOIN THE ENDS OF TWO FENCES, USE THE WRAP JOINT METHOD.)
5. LAY THE LOWER FOUR INCHES OF FILTER FABRIC ON THE BOTTOM OF THE TRENCH AND EXTEND IT TOWARD THE UP-SLOPE SIDE OF THE TRENCH.
6. BACKFILL THE TRENCH WITH SOIL MATERIAL AND COMPACT IT IN PLACE.

SILT FENCE MAINTENANCE REQUIREMENTS

1. INSPECT WITHIN 24 HOURS OF A RAIN EVENT AND AT LEAST ONCE EVERY SEVEN CALENDAR DAYS.
2. IF FENCE FABRIC TEARS, STARTS TO DECOMPOSE, OR IN ANY WAY BECOMES INEFFECTIVE, REPLACE THE AFFECTED PORTION IMMEDIATELY.
3. REMOVE DEPOSITED SEDIMENT WHEN IT IS CAUSING THE FILTER FABRIC TO BULGE OR WHEN IT REACHES ONE-HALF THE HEIGHT OF THE FENCE AT ITS LOWEST POINT. WHEN CONTRIBUTING DRAINAGE AREA HAS BEEN STABILIZED, REMOVE THE FENCE AND SEDIMENT DEPOSITS, GRADE THE SITE TO BLEND WITH THE SURROUNDING AREA, AND STABILIZE.

PHYSICAL PROPERTY	WOVEN GEOTEXTILE FABRIC	NON-WOVEN GEOTEXTILE FABRIC
FILTERING EFFICIENCY	85%	85%
TEXTILE STRENGTH AT 20% ELONGATION STANDARD STRENGTH EXTRA STRENGTH	30 LBS. PER LINEAL INCH 50 LBS. PER LINEAL INCH	50 LBS. PER LINEAL INCH 70 LBS. PER LINEAL INCH
SLURRY FLOW RATE	0.3 GAL./MIN./SQUARE FOOT	4.5 GAL./MIN./SQUARE FOOT
WATER FLOW RATE	15 GAL./MIN./SQUARE FOOT	220 GAL./MIN./SQUARE FOOT
UV RESISTANCE	70%	85%
POST SPACING	7 FEET	5 FEET

SILT FENCE INSTALLATION

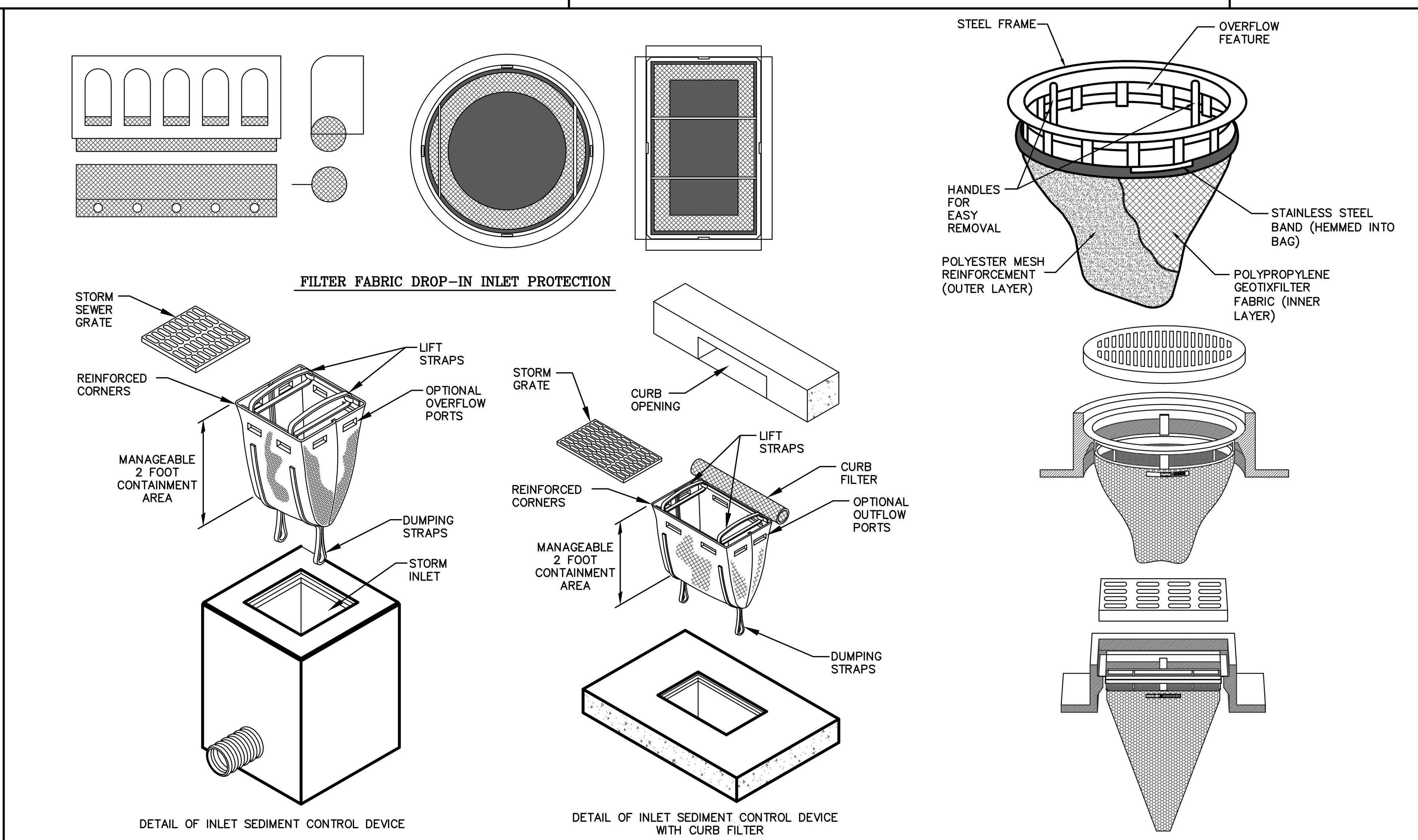

INLET PROTECTION INSPECTION AND MAINTENANCE

1. INSPECT BMPS PRIOR TO FORECAST RAIN, DAILY DURING EXTENDED RAIN EVENTS, AFTER RAIN EVENTS, WEEKLY DURING THE RAINY SEASON, AND AT TWO-WEEK INTERVALS DURING THE NON-RAINY SEASON.
2. FILTER FABRIC FENCES. IF THE FABRIC BECOMES CLOGGED, TORN, OR DEGRADES, IT SHOULD BE REPLACED. MAKE SURE THE STAKES ARE SECURELY DRIVEN IN THE GROUND AND ARE IN GOOD SHAPE (I.E., NOT BENT, CRACKED, OR SPLINTERED, AND ARE REASONABLY PERPENDICULAR TO THE GROUND). REPLACE DAMAGED STAKES.
3. GRAVEL FILTERS. IF THE GRAVEL BECOMES CLOGGED WITH SEDIMENT, IT MUST BE CAREFULLY REMOVED FROM THE INLET AND EITHER CLEANED OR REPLACED. SINCE CLEANING GRAVEL AT A CONSTRUCTION SITE MAY BE DIFFICULT, CONSIDER USING THE SEDIMENT-LADEN STONE AS FILL MATERIAL AND PUT FRESH STONE AROUND THE INLET. INSPECT BAGS FOR HOLES, GASHES, AND SNAGS, AND REPLACE BAGS AS NEEDED. CHECK GRAVEL BAGS FOR PROPER ARRANGEMENT AND DISPLACEMENT.
4. SEDIMENT THAT ACCUMULATES IN THE BMP MUST BE PERIODICALLY REMOVED IN ORDER TO MAINTAIN BMP EFFECTIVENESS. SEDIMENT SHOULD BE REMOVED WHEN THE SEDIMENT ACCUMULATION REACHES ONE-THIRD OF THE BARRIER HEIGHT. SEDIMENT REMOVED DURING MAINTENANCE MAY BE INCORPORATED INTO EARTHWORK ON THE SITE ORE DISPOSED AT AN APPROPRIATE LOCATION.
5. REMOVE STORM DRAIN INLET PROTECTION ONCE THE DRAINAGE AREA IS STABILIZED.
6. CLEAN AND RE-GRADE AREA AROUND THE INLET AND CLEAN THE INSIDE OF THE STORM DRAIN INLET AS IT MUST BE FREE OF SEDIMENT AND DEBRIS AT THE TIME OF FINAL INSPECTION.

DROP-IN INLET PROTECTION

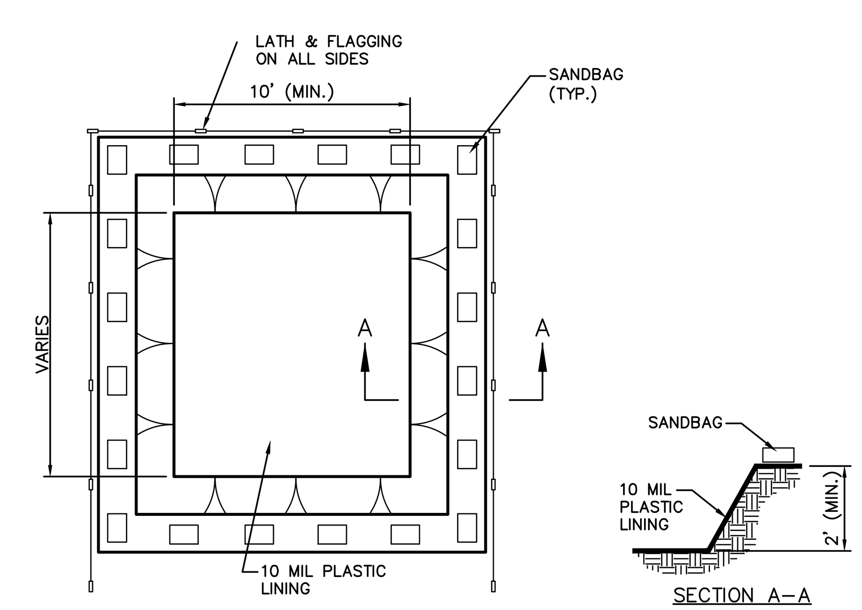

1. LOCATE WASH OUT AREA AT LEAST 50 FEET FROM STORM DRAINS, OPEN DITCHES, OR BODIES OF WATER. DO NOT ALLOW RUNOFF FROM THIS AREA BY CONSTRUCTING A TEMPORARY PIT OR BERMED AREA LARGE ENOUGH FOR LIQUID AND SOLID WASTE.
2. TEMPORARY WASH OUT FACILITIES SHOULD HAVE A TEMPORARY PIT AREA OF SUFFICIENT VOLUME TO COMPLETELY CONTAIN ALL LIQUID AND SOLID WASTE CONCRETE MATERIALS GENERATED DURING WASH OUT PROCEDURES.
3. ONLY CONCRETE FROM MIXER TRUCK CHUTES SHOULD BE WASHED INTO WASH OUT PIT.
4. PLASTIC LINING MATERIAL SHOULD BE A MINIMUM OF 10 MIL POLYETHYLENE SHEETING AND SHOULD BE FREE OF HOLES, TEARS, OR OTHER DEFECTS THAT COMPROMISE THE IMPERMEABILITY OF THE MATERIAL.
5. THE CONCRETE WASHOUT AREA SHALL BE INSPECTED DAILY FOR PUNCTURES OR TEARS IN THE PLASTIC LINER. THE LINER SHALL BE REPLACED UPON REMOVAL OF HARDENED CONCRETE.
6. TEMPORARY CONCRETE WASHOUT FACILITIES SHOULD BE MAINTAINED TO PROVIDE ADEQUATE HOLDING CAPACITY WITH A MINIMUM FREEBOARD OF 12 INCHES FOR BELOW GRADE FACILITIES. MAINTAINING TEMPORARY CONCRETE WASH OUT FACILITIES SHOULD INCLUDE REMOVING AND DISPOSING OF HARDENED CONCRETE AND RETURNING THE FACILITY TO A FUNCTIONAL CONDITION. HARDENED CONCRETE MATERIALS SHOULD BE REMOVED AND DISPOSED OF. IN ACCORDANCE WITH LOCAL STANDARDS.
7. CONCRETE WASHOUT AREAS SHALL BE CLEARLY MARKED WITH LATH & FLAGGING AND A SIGN POSTED AND LABELED "CONCRETE WASHOUT". LATH AND FLAGGING SHOULD BE COMMERCIAL TYPE.
8. THE CONCRETE WASH OUT AREA SHALL BE REPAIRED AND/OR ENLARGED AS NECESSARY TO MAINTAIN CAPACITY FOR WASTED CONCRETE.
9. WASHOUT FACILITIES MUST BE CLEANED, OR NEW FACILITIES MUST BE CONSTRUCTED AND READY FOR USE ONCE THE WASHOUT IS 75% FULL.
10. AT THE END OF CONSTRUCTION, ALL CONCRETE SHALL BE REMOVED FROM THE SITE AND LEGALLY DISPOSED OF AT AN APPROVED SITE

CONCRETE WASHOUT

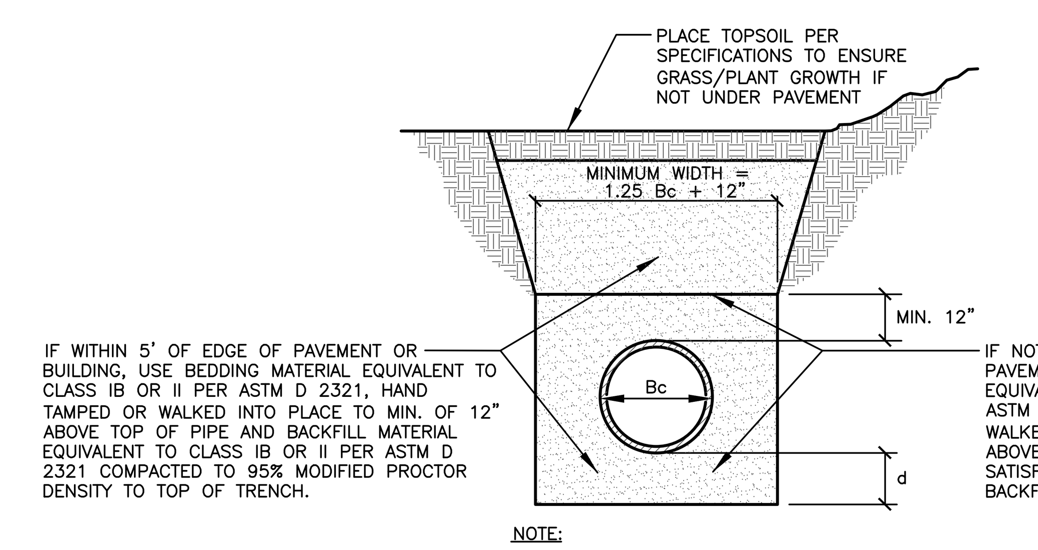

DEPTH OF BEDDING MATERIAL BELOW PIPE

D	d (MIN)
27" & SMALLER	4
30" TO 60"	4
66" & LARGER	4

LEGEND

Bc= OUTSIDE DIAMETER
D= INSIDE DIAMETER
d= DEPTH OF BEDDING MATERIAL BELOW PIPE

NOTE:

ALL INITIAL BACKFILL SHALL BE INSTALLED IN 6" TO 12" BALANCED LIFTS.

A MINIMUM 9" OF CLEARANCE SHALL BE PROVIDED ON EACH SIDE OF THE INSTALLED PIPE.

PLASTIC PIPE (PVC + HDPE) BEDDING DETAIL

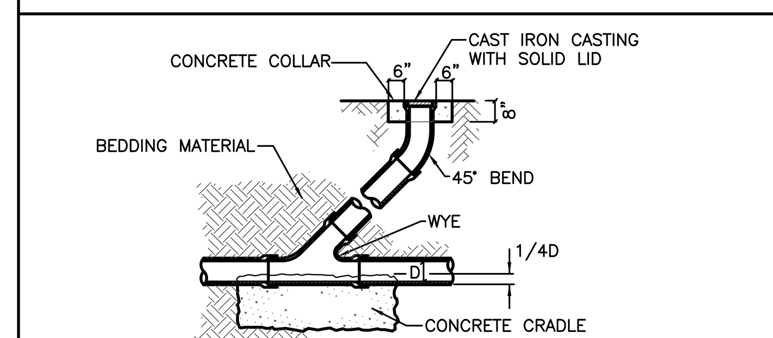

SANITARY SEWER CLEANOUT

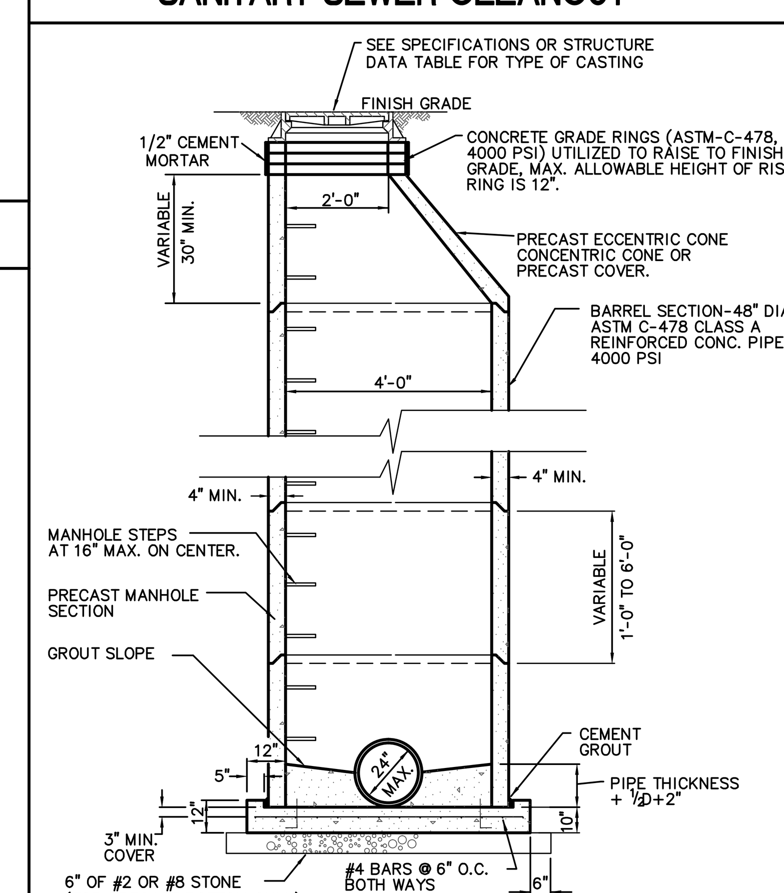

MANHOLE TYPE "C" (STORM SEWER)

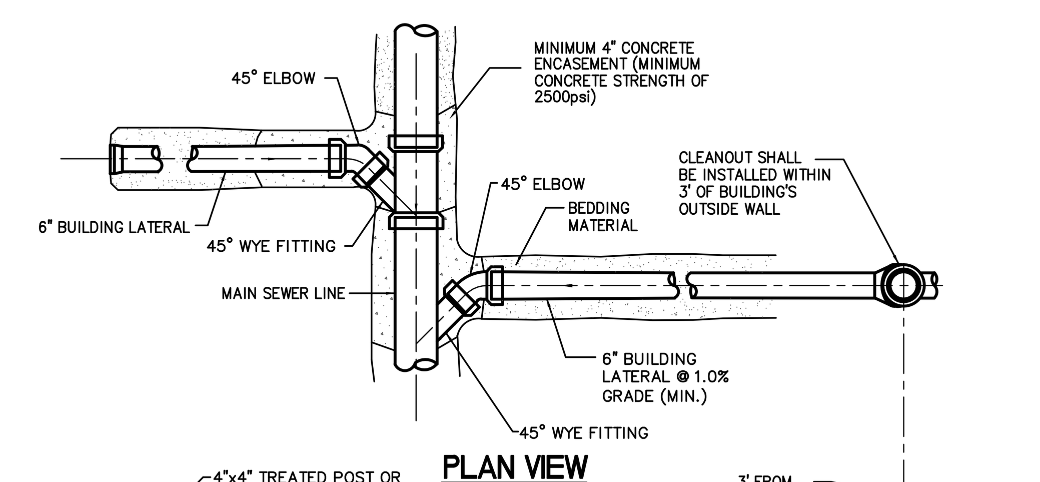

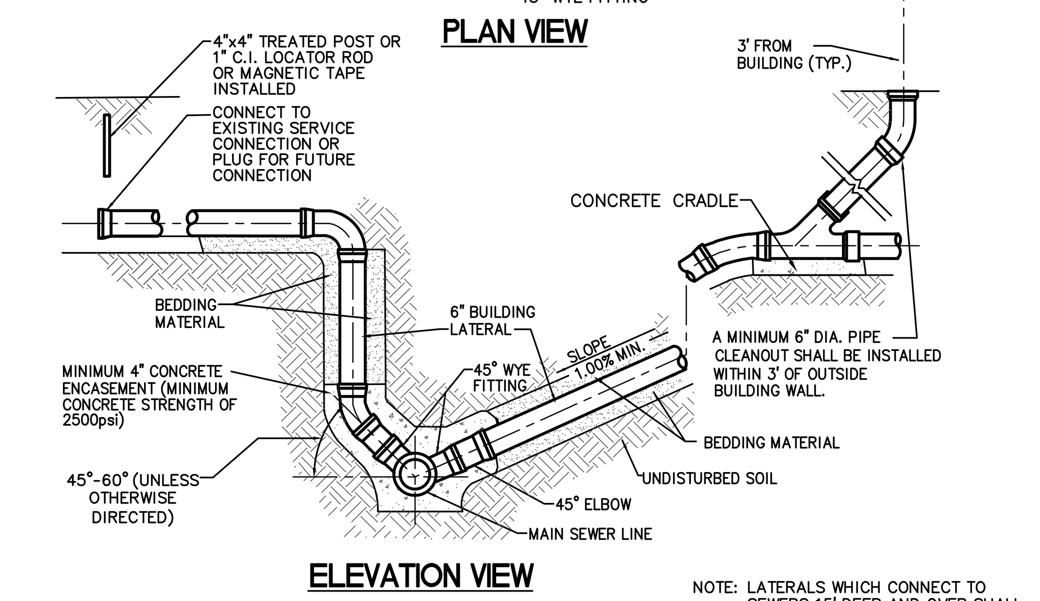

NOTE: LATERALS WHICH CONNECT TO SEWERS 15' DEEP AND OVER SHALL HAVE CONCRETE ENCASEMENT AS SHOWN. SERVICE CONNECTIONS LESS THAN 15' REQUIRE ONLY THE INSTALLATION OF A CONCRETE CRADLE UNDER THE SEWER MAIN AND FITTINGS.

SANITARY LATERAL CONNECTION

100% CONSTRUCTION DOCUMENTS

Revisions:	Date

CONSULTANTS:

Applied Engineering Services
9100 Keystone Crossing, Suite 200
Indianapolis, IN 46240

ARCHITECT/ENGINEERS:

AMERICAN STRUCTUREPOINT INC.
7260 Shadeland Station | Indianapolis, Indiana 46256
TEL 317.547.5580 | FAX 317.543.0270
www.structurepoint.com

Drawing Title: SITE DETAILS

Approved: Project Director

Project Title: VA Medical Center
Illiana Healthcare System
Demolish Buildings 12, 26, 40, and 74

Location: Danville, Illinois

Date: 2014-12-12
Checked: RLN / SAC
Drawn: JLG

Project Number: 550-11-116
Building Number: 12
Drawing Number: 12-CS-501
Dwg. 9 of 36

Office of Construction and Facilities Management

VA U.S. Department of Veterans Affairs

VA FORM 08-6231

GENERAL NOTES

1. ALL UTILITY INFORMATION SHALL BE VERIFIED BY THE CONTRACTOR PRIOR TO COMMENCING DEMOLITION & CONSTRUCTION.
2. MAINTAIN EXISTING UTILITIES TO REMAIN IN SERVICE AND PROTECT AGAINST DAMAGE DURING DEMOLITION AND CONSTRUCTION.
3. THE CONTRACTOR SHALL PROTECT AND NOT DESTROY THE SURVEY CONTROL POINTS DURING DEMOLITION AND CONSTRUCTION.
4. SOME INFORMATION HAS BEEN SHOWN PER AS-BUILT AND/OR RECORD DRAWINGS PROVIDED BY THE VETERANS AFFAIR. THIS INFORMATION HAS BEEN SCALE FROM THE DRAWINGS AND MAY NOT REPRESENT THE EXACT LOCATION IN THE FIELD. IT IS THE CONTRACTOR'S RESPONSIBILITY TO FIELD VERIFY EXISTING CONDITIONS PRIOR TO DEMOLITION ACTIVITIES. CONTRACTOR TO NOTIFY CONTRACTING OFFICER IMMEDIATELY AND A/E IF ANY DISCREPANCIES ARE FOUND.

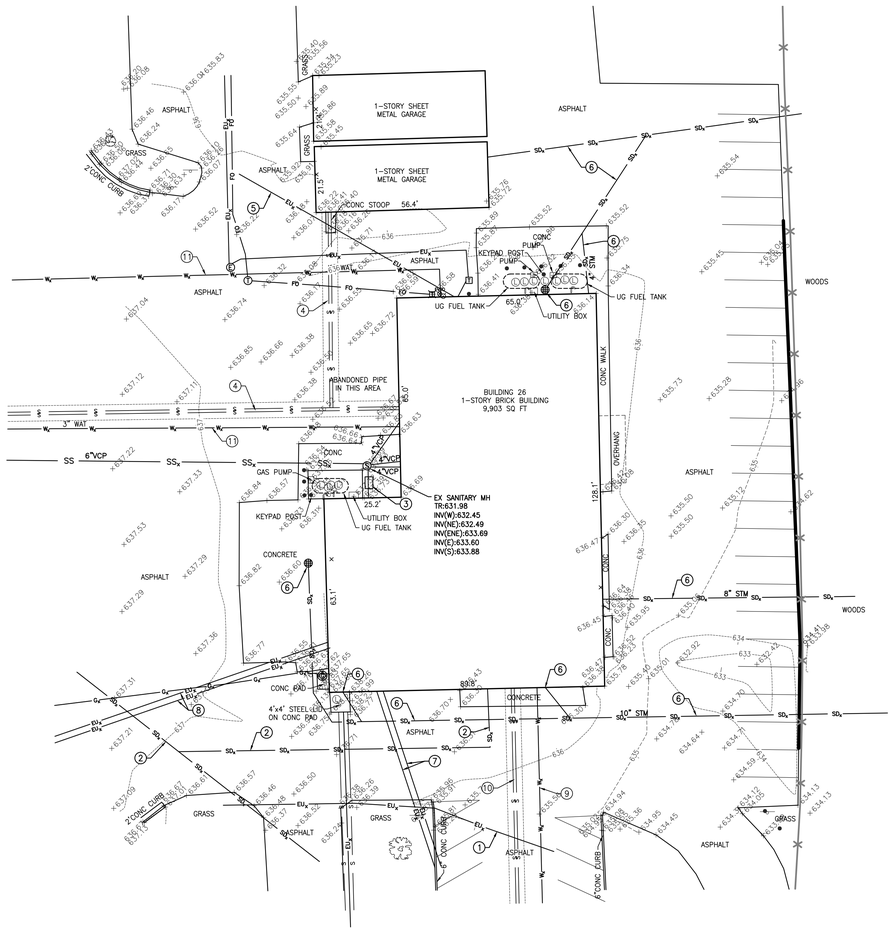

LEGEND

STEAM MANHOLE	
CURB INLET	
DRAINAGE INLET	
CLEAN OUT	
COMBINATION MANHOLE	
SANITARY MANHOLE	
DRAINAGE MANHOLE	
LID	
GUARD POST	
SIGN	
ELECTRIC METER	
ELECTRIC MANHOLE	
LIGHT POLE	
TRANSFORMER	
GAS METER	
VALVE (GAS & WATER)	
TERMITE BAIT SYSTEM	
TELEPHONE MANHOLE	
TELEPHONE PEDESTAL	
TELEPHONE BOX	
FIRE VALVE SHUT OFF	
HOSE BIB	
WATER METER	
VENT	
BUSH	
CONIFEROUS TREE	
DECIDUOUS TREE	
EU	UNDERGROUND ELECTRIC LINE
FO	BURIED FIBER OPTIC LINE
G	UNDERGROUND GAS
S	UNDERGROUND STEAM LINE
T	UNDERGROUND COMMUNICATIONS
W	UNDERGROUND WATER LINE
SS	SANITARY SEWER
SD	STORM SEWER
TR	TOP OF RIM ELEVATION
INV	INVERT ELEVATION
VCP	VITRIFIED CLAY PIPE

1. POSSIBLE UNDERGROUND ELECTRIC LINE PER ELECTRICAL RECORD DRAWING E-1, DATED OCTOBER 7, 1959.
2. POSSIBLE STORM SEWER PER PLUMBING AND ELECTRICAL RECORD DRAWING 26A-4, DATED JUNE 15, 1933.
3. POSSIBLE SANITARY INTERCEPTOR TRAP PER PLUMBING AND ELECTRICAL RECORD DRAWING 26A-4, DATED JUNE 15, 1933.
4. POSSIBLE STEAM PIPE AND CONCRETE TRENCH PER BUILDING NO. 26 AS-BUILT DRAWING 26A-2, DATED JUNE 15, 1933.
5. POSSIBLE SIGNAL / FIRE ALARM LINE PER ELECTRICAL RECORD DRAWING E-1, DATED AUGUST 25, 1986.
6. POSSIBLE STORM SEWER PIPE/STRUCTURE, PER CAD FILE PROVIDED BY THE VA. (NO VISUAL EVIDENCE FOUND)
7. POSSIBLE ELECTRIC DUCTS, PER CAD FILE PROVIDED BY THE VA. (NO VISUAL EVIDENCE FOUND)
8. POSSIBLE ELECTRIC DUCTS PER ELECTRICAL DISTRIBUTION RECORD DRAWING, DATED JUNE 1, 1937.
9. POSSIBLE WATER LINE, PER CAD FILE PROVIDED BY THE VA. (NO VISUAL EVIDENCE FOUND)
10. POSSIBLE STEAM LINE AND TRENCH, PER CAD FILE PROVIDED BY THE VA. (NO VISUAL EVIDENCE FOUND)
11. POSSIBLE WATER LINE PER SPRINKLER SYSTEM RECORD DRAWINGS, DATED OCTOBER 1981.

BENCHMARK INFORMATION (NAVD 1988)

BCA BENCHMARK 52
USNGS BM "C 300 1986"
TOP OF STEEL ROD IN UNITED STATES NATIONAL GEODETIC SURVEY VAULT WITH ACCESS CORNER STAMPED "C 300 1986" FOUND 22 FEET SOUTH OF THE SOUTH EDGE OF MAIN STREET AND 9 FEET EAST OF THE EAST EDGE OF THE EAST ACCESS DRIVE TO THE VETERANS ADMINISTRATION HOSPITAL, DANVILLE, VERMILION COUNTY, ILLINOIS.
ELEV- 640.71

BCA BENCHMARK 462
CHISELED SQUARE SET ON TOP OF THE NORTHEASTERLY SIDE OF A CONCRETE LIGHT POLE BASE, 225 FEET SOUTHEAST OF THE SOUTHEAST CORNER OF A TWO STORY BRICK BUILDING (VETERANS ADMINISTRATION BUILDING NUMBER 60) AND 16 FEET SOUTHWEST OF THE CENTERLINE OF VETERANS ADMINISTRATION ACCESS DRIVE, DANVILLE, VERMILION COUNTY, ILLINOIS.
ELEV - 632.65

CAUTION !!
THE LOCATIONS OF ALL EXISTING UNDERGROUND UTILITIES SHOWN ON THIS PLAN ARE BASED UPON ABOVE GROUND EVIDENCE (including, but not limited to, manholes, inlets, valves, and marks made upon the ground by others) AND ARE SPECULATIVE IN NATURE. THERE MAY ALSO BE OTHER EXISTING UNDERGROUND UTILITIES FOR WHICH THERE IS NO ABOVE GROUND EVIDENCE OR FOR WHICH NO ABOVE GROUND EVIDENCE WAS OBSERVED.
THE EXACT LOCATIONS OF SAID EXISTING UNDERGROUND UTILITIES SHALL BE VERIFIED BY THE CONTRACTOR PRIOR TO ANY AND ALL CONSTRUCTION.

EXISTING TOPOGRAPHY

1" = 20'

0' 10' 20' 40'

100% CONSTRUCTION DOCUMENTS

Revisions:	Date

CONSULTANTS:

Applied Engineering Services
9100 Keystone Crossing, Suite 200
Indianapolis, IN 46240

ARCHITECT/ENGINEERS:

AMERICAN STRUCTUREPOINT INC.
7260 Shadeland Station | Indianapolis, Indiana 46256
TEL 317.547.5580 | FAX 317.543.0270
www.structurepoint.com

Drawing Title: EXISTING TOPOGRAPHY

Approved: Project Director

Project Title: VA Medical Center, Illiana Healthcare System, Demolish Buildings 12, 26, 40, and 74

Location: Danville, Illinois

Date: 2014-12-12 | Checked: RLN / SAC | Drawn: JLG

Project Number: 550-11-116

Building Number: 26

Drawing Number: 26-VF-101

Dwg. 10 of 36

Office of Construction and Facilities Management

VA U.S. Department of Veterans Affairs

VA FORM 08-6231

P:\2010\00629\D_Drawings\0004\Civil\Plan Set\10_550-11-116-26-VF-101.dwg 12-15-14 04:49:32 PM emiller

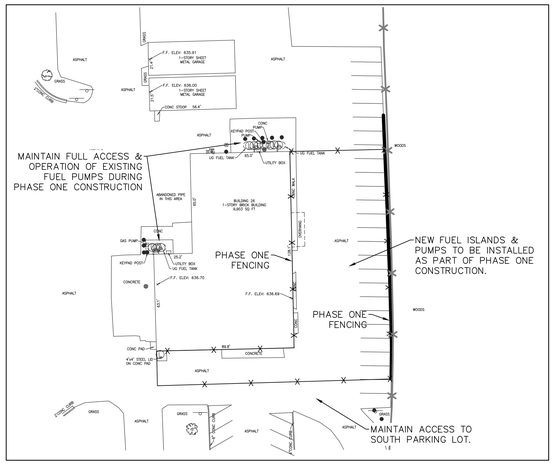

PHASE ONE CONSTRUCTION

SCALE: 1"=40'

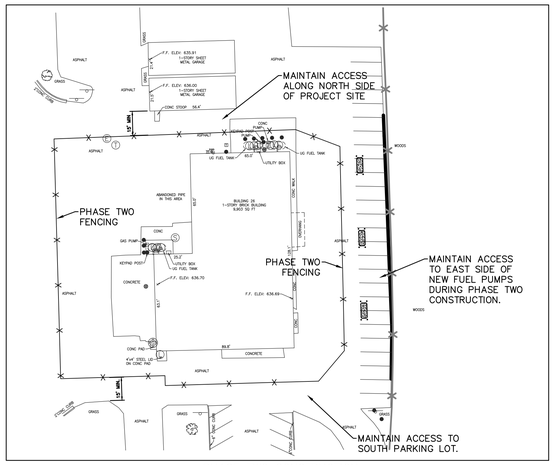

PHASE TWO CONSTRUCTION

SCALE: 1"=40'

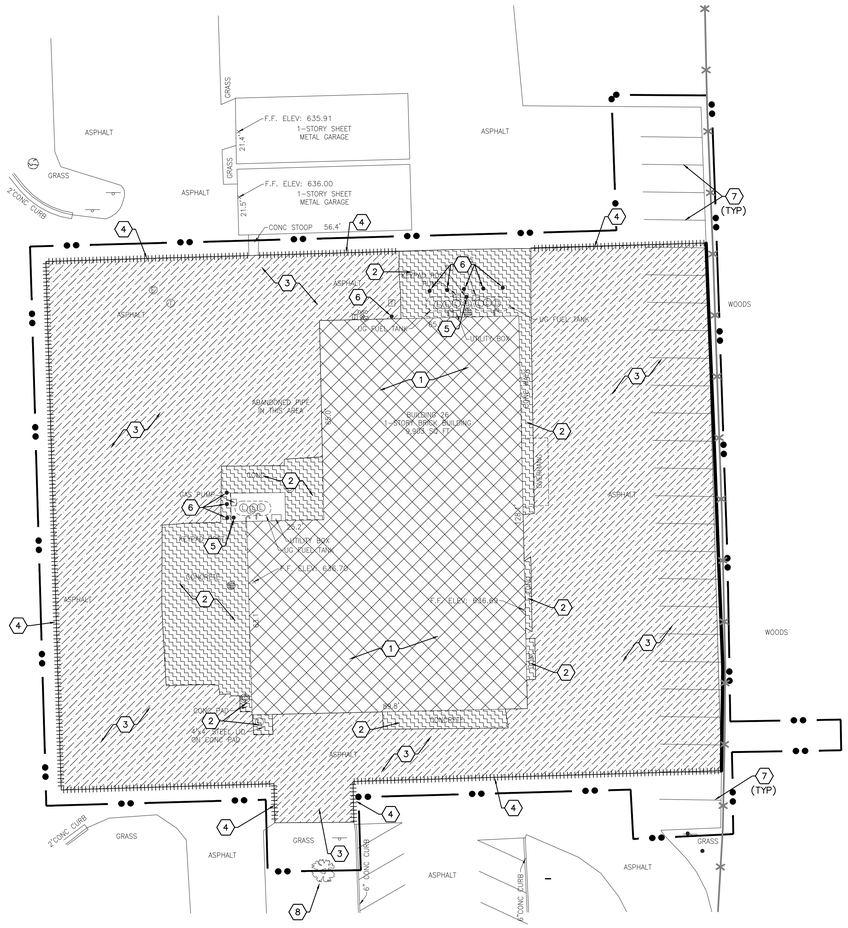

SITE DEMOLITION PLAN

1" = 20'

0' 10' 20' 40'

NOTE:
CONTRACTOR TO VERIFY LOCATION AND DEPTH OF EXISTING UTILITIES PRIOR TO COMMENCING ANY CONSTRUCTION. CONTACT ENGINEER IF VARIATION EXISTS.

CAUTION !!
THE LOCATIONS OF ALL EXISTING UNDERGROUND UTILITIES SHOWN ON THIS PLAN ARE BASED UPON ABOVE GROUND EVIDENCE (including, but not limited to, manholes, inlets, valves, and marks made upon the ground by others) AND ARE SPECULATIVE IN NATURE. THERE MAY ALSO BE OTHER EXISTING UNDERGROUND UTILITIES FOR WHICH THERE IS NO ABOVE GROUND EVIDENCE OR FOR WHICH NO ABOVE GROUND EVIDENCE WAS OBSERVED. THE EXACT LOCATIONS OF SAID EXISTING UNDERGROUND UTILITIES SHALL BE VERIFIED BY THE CONTRACTOR PRIOR TO ANY AND ALL CONSTRUCTION.

NOTE:
SITE UTILITIES SHOWN FOR REFERENCE ONLY. REFER TO UTILITY DEMOLITION PLAN (26-CD-102) FOR MORE DETAILED INFORMATION.

NOTE:
PAVEMENT REMOVAL LIMITS ARE AN ESTIMATE PROVIDED BY THE ENGINEER. CONTRACTOR SHALL REMOVE ALL EXISTING PAVEMENT AS REQUIRED FOR DEMOLITION AND CONSTRUCTION AT NO ADDITIONAL COST TO THE GOVERNMENT.

GENERAL NOTES

1. ALL WORK TO CONFORM TO FEDERAL, STATE AND LOCAL REGULATIONS.
2. CONTRACTOR SHALL KEEP ADJOINING PROPERTIES CLEAN OF CONSTRUCTION DEBRIS AND CONSTRUCTION TRAFFIC AT ALL TIMES.
3. CLEAR AND GRUB ALL TREES AND VEGETATION NECESSARY FOR CONSTRUCTION.
4. PROTECT TREES TO REMAIN DURING CONSTRUCTION. PROVIDE TREE PROTECTION FENCING AT THE TREE DRIP LINE.
5. STORAGE OF MATERIALS AND PARKING OF EQUIPMENT AND VEHICLES BELOW TREE CANOPIES WITHIN THE TREE DRIP LINE IS PROHIBITED.
6. THE CONTRACTOR SHALL REMOVE AND DISPOSE OF ALL EXISTING STRUCTURES, FENCES, CONCRETE, ASPHALT PAVEMENT AND OTHER MISCELLANEOUS APPURTENANCES ON SITE, UNLESS NOTED TO REMAIN ON THE CONTRACT DRAWINGS.
7. THE USE OF ANY TYPE OF EXPLOSIVES WILL NOT BE PERMITTED.
8. CONDUCT DEMOLITION AND CONSTRUCTION OPERATIONS TO ENSURE MINIMAL INTERFERENCE WITH STREETS, WALKS AND OTHER ADJACENT OCCUPIED FACILITIES.
9. DO NOT CLOSE OR OBSTRUCT STREETS, WALKS OR OTHER OCCUPIED FACILITIES WITHOUT PERMISSION FROM THE LOCAL AUTHORITIES HAVING JURISDICTION. PROVIDE ALTERNATE ROUTES AROUND CLOSED OR OBSTRUCTED TRAFFIC WAYS, IF REQUIRED BY GOVERNING AUTHORITIES.
10. ENSURE SAFE PASSAGE OF PERSONS AROUND AREAS OF DEMOLITION AND CONSTRUCTION. CONDUCT OPERATIONS TO PREVENT DAMAGE TO ADJACENT STRUCTURES AND OTHER FACILITIES AND INJURY TO PERSONS.
11. PROMPTLY REPAIR DAMAGE TO ADJACENT FACILITIES CAUSED BY DEMOLITION AND CONSTRUCTION OPERATIONS.
12. ALL UTILITY INFORMATION SHALL BE VERIFIED BY THE CONTRACTOR. CALL "JULIE", THE ILLINOIS ONE-CALL SYSTEM (811) FOR MARKING OF UNDERGROUND UTILITY LOCATIONS. NOTIFY AMERICAN STRUCTUREPOINT IF ANY VARIATION EXISTS.
13. MAINTAIN EXISTING UTILITIES TO REMAIN IN SERVICE AND PROTECT AGAINST DAMAGE DURING DEMOLITION AND CONSTRUCTION OPERATIONS. ANY UTILITY OUTAGE REQUIRES A MINIMUM 14 DAY NOTICE TO THE CONTRACTING OFFICER.
14. ALL UTILITIES TO BE REMOVED SHALL BE DISCONNECTED AND CAPPED AT THE NEAREST CONNECTION POINT. ANY UTILITIES UNDER ROADWAYS TO BE CAPPED, NOT REMOVED. UTILITIES SHALL BE CAPPED IN ACCORDANCE WITH THE GUIDELINES OF AUTHORITY HAVING JURISDICTION.
15. THE CONTRACTOR SHALL PROTECT AND NOT DESTROY THE BASE SURVEY CONTROL POINTS DURING DEMOLITION AND CONSTRUCTION.
16. CONTRACTOR SHALL SAVE AS MANY TREES AS POSSIBLE, AS INDICATED ON THE DRAWINGS.
17. DEMOLITION OF ELECTRIC LINES SHALL MEET UTILITY AGENCY REQUIREMENTS.
18. CONSTRUCTION PHASING AND FENCE LOCATIONS ARE AN ESTIMATE PROVIDED BY THE ENGINEER. CONTRACTOR SHALL MAKE FIELD ADJUSTMENTS AS NECESSARY AND AS DIRECTED BY GOVERNMENT.

SHEET KEYNOTES

1. EXISTING BUILDING AND FOUNDATION TO BE REMOVED (BACKFILL BASEMENT WITH STRUCTURAL FILL, REFER TO SPECIFICATIONS) (REFER TO ARCHITECTURAL PLANS FOR BUILDING DEMOLITION)
2. CONCRETE PADS, SIDEWALKS AND OTHER MISCELLANEOUS SITE CONCRETE AND BASE TO BE REMOVED AS NOTED.
3. EXISTING FULL DEPTH ASPHALT PAVEMENT TO BE REMOVED.
4. SAWCUT TO FULL DEPTH OF PAVEMENT.
5. EXISTING KEYPAD POST TO BE REMOVED AND REINSTALLED.
6. EXISTING GUARD POST TO BE REMOVED.
7. EXISTING PAVEMENT MARKINGS TO BE REMOVED.
8. EXISTING TREE TO REMAIN. CONTRACTOR SHALL TRIM BRANCHES AS REQUIRED TO FOR NEW TRANSFORMER INSTALLATION.

DEMOLITION LEGEND

- BUILDING TO BE REMOVED
- DEMOLITION OF ASPHALT
- DEMOLITION OF CONCRETE
- PAVEMENT SAWCUT
- LIMITS OF WORK
- 6' CHAIN LINK TEMPORARY CONSTRUCTION FENCE

EXISTING LEGEND

	STEAM MANHOLE		HOSE BIB
	CURB INLET		WATER METER
	DRAINAGE INLET		VENT
	CLEAN OUT		BUSH
C	COMBINATION MANHOLE		CONIFEROUS TREE
S	SANITARY MANHOLE		DECIDUOUS TREE
D	DRAINAGE MANHOLE	EU	UNDERGROUND ELECTRIC LINE
L	LID	FO	BURIED FIBER OPTIC LINE
	GUARD POST	G	UNDERGROUND GAS
	SIGN	S	UNDERGROUND STEAM LINE
E	ELECTRIC METER	T	UNDERGROUND COMMUNICATIONS
E	ELECTRIC MANHOLE	W	UNDERGROUND WATER LINE
	LIGHT POLE	SS	SANITARY SEWER
	TRANSFORMER	SD	STORM SEWER
	GAS METER	TR	TOP OF RIM ELEVATION
	VALVE (GAS & WATER)	INV	INVERT ELEVATION
	TERMITE BAIT SYSTEM	VCP	VITRIFIED CLAY PIPE
T	TELEPHONE MANHOLE		
	TELEPHONE PEDESTAL		
	TELEPHONE BOX		
FSO	FIRE VALVE SHUT OFF		

CONSTRUCTION PHASING NOTE

CONTRACTOR SHALL PHASE CONSTRUCTION TO ALLOW FOR INSTALLATION AND FULL OPERATION OF NEW FUEL ISLANDS, PUMPS, CONTROLS, ETC. WITH MAXIMUM OF 48 HOURS OF DOWNTIME. TEMPORARY CONSTRUCTION FENCE FOR PHASE 2 SHALL BE LOCATED WEST OF THE NEW FUEL PUMP ISLANDS TO ALLOW FOR ACCESS TO EAST SIDE OF NEW FUEL PUMP ISLANDS. ADJUST FENCE AS SHOWN TO ALLOW FOR ACCESS FOR BUSES AND REFUELING TRUCKS.

100% CONSTRUCTION DOCUMENTS

Revisions	Date

CONSULTANTS:

Applied Engineering Services
9100 Keystone Crossing, Suite 200
Indianapolis, IN 46240

ARCHITECT/ENGINEERS:

AMERICAN STRUCTUREPOINT INC.
7260 Shadeland Station | Indianapolis, Indiana 46256
TEL 317.547.5580 | FAX 317.543.0270
www.structurepoint.com

Drawing Title: SITE DEMOLITION PLAN

Approved: Project Director

Project Title: VA Medical Center, Illiana Healthcare System, Demolish Buildings 12, 26, 40, and 74

Location: Danville, Illinois

Date: 2014-12-12 | Checked: RLN / SAC | Drawn: JLG

Project Number: 550-11-116

Building Number: 26

Drawing Number: 26-CD-101

Dwg. 11 of 36

Office of Construction and Facilities Management

VA U.S. Department of Veterans Affairs

VA FORM 08-6231

P:\2010\00629\D_Drawings\0004\Civil\Plan Set\1_550-11-116-26-CD-101.dwg 12-15-14 04:49:43 PM emiller

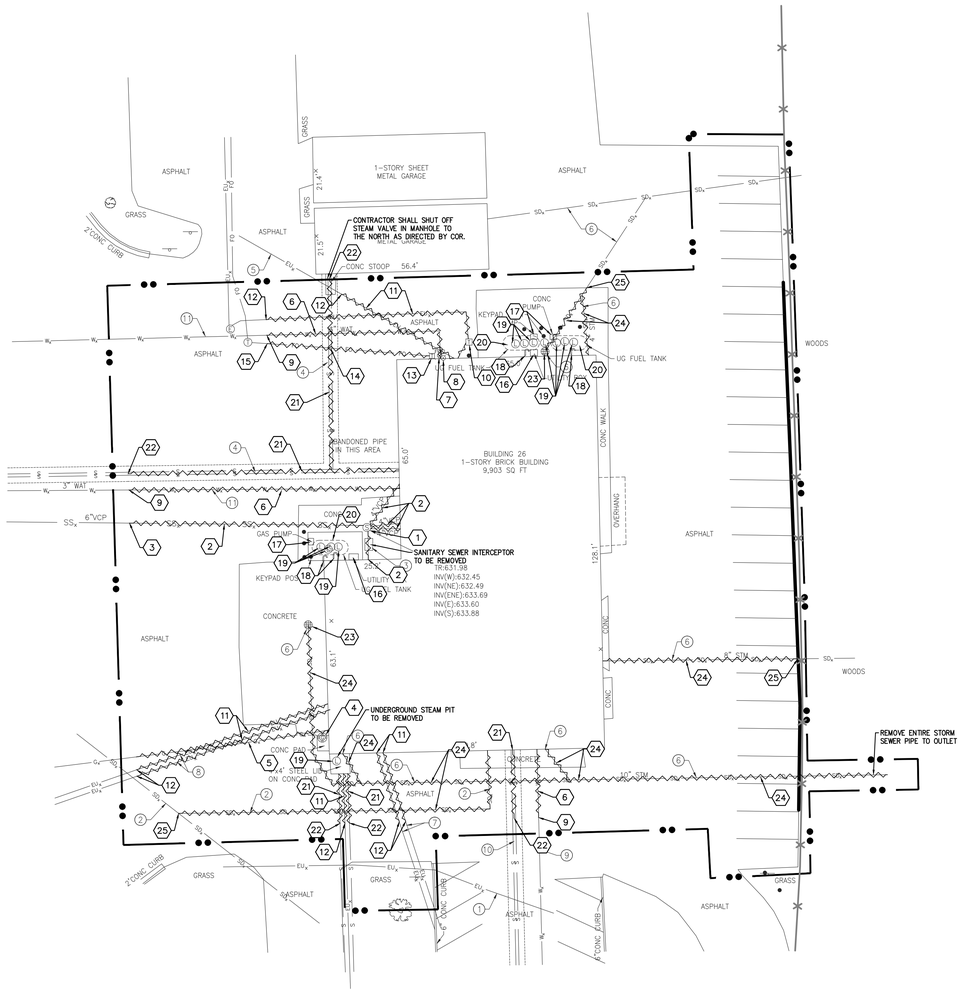

UTILITY DEMOLITION PLAN

1" = 20'

0' 10' 20' 40'

NOTE:
CONTRACTOR TO VERIFY LOCATION AND DEPTH OF EXISTING UTILITIES PRIOR TO COMMENCING ANY CONSTRUCTION. CONTACT ENGINEER IF VARIATION EXISTS.

CAUTION !!
THE LOCATIONS OF ALL EXISTING UNDERGROUND UTILITIES SHOWN ON THIS PLAN ARE BASED UPON ABOVE GROUND EVIDENCE (including, but not limited to, manholes, inlets, valves, and marks made upon the ground by others) AND ARE SPECULATIVE IN NATURE. THERE MAY ALSO BE OTHER EXISTING UNDERGROUND UTILITIES FOR WHICH THERE IS NO ABOVE GROUND EVIDENCE OR FOR WHICH NO ABOVE GROUND EVIDENCE WAS OBSERVED. THE EXACT LOCATIONS OF SAID EXISTING UNDERGROUND UTILITIES SHALL BE VERIFIED BY THE CONTRACTOR PRIOR TO ANY AND ALL CONSTRUCTION.

NOTE:
UTILITIES THAT ARE ABANDONED IN PLACE MUST BE PROPERLY CAPPED, GROUTED OR TERMINATED. PLASTIC PIPE AND CONDUIT MAY BE CAPPED. CONCRETE AND CLAY PIPES SHALL BE GROUTED SOLID. GROUTING SHALL EXTEND INTO PIPE A DISTANCE OF SUFFICIENT LENGTH TO RESIST FORCES ON THE GROUT

GENERAL NOTES

1. ALL WORK TO CONFORM TO FEDERAL, STATE AND LOCAL REGULATIONS.
2. CONTRACTOR SHALL KEEP ADJOINING PROPERTIES CLEAN OF CONSTRUCTION DEBRIS AND CONSTRUCTION TRAFFIC AT ALL TIMES.
3. CLEAR AND GRUB ALL TREES AND VEGETATION NECESSARY FOR CONSTRUCTION.
4. PROTECT TREES TO REMAIN DURING CONSTRUCTION. PROVIDE TREE PROTECTION FENCING AT THE TREE DRIP LINE.
5. STORAGE OF MATERIALS AND PARKING OF EQUIPMENT AND VEHICLES BELOW TREE CANOPIES WITHIN THE TREE DRIP LINE IS PROHIBITED.
6. THE CONTRACTOR SHALL REMOVE AND DISPOSE OF ALL EXISTING STRUCTURES, FENCES, CONCRETE, ASPHALT PAVEMENT AND OTHER MISCELLANEOUS APPURTENANCES ON SITE, UNLESS NOTED TO REMAIN ON THE CONTRACT DRAWINGS.
7. THE USE OF ANY TYPE OF EXPLOSIVES WILL NOT BE PERMITTED.
8. CONDUCT DEMOLITION AND CONSTRUCTION OPERATIONS TO ENSURE MINIMAL INTERFERENCE WITH STREETS, WALKS AND OTHER ADJACENT OCCUPIED FACILITIES.
9. DO NOT CLOSE OR OBSTRUCT STREETS, WALKS OR OTHER OCCUPIED FACILITIES WITHOUT PERMISSION FROM THE LOCAL AUTHORITIES HAVING JURISDICTION. PROVIDE ALTERNATE ROUTES AROUND CLOSED OR OBSTRUCTED TRAFFIC WAYS, IF REQUIRED BY GOVERNING AUTHORITIES.
10. ENSURE SAFE PASSAGE OF PERSONS AROUND AREAS OF DEMOLITION AND CONSTRUCTION. CONDUCT OPERATIONS TO PREVENT DAMAGE TO ADJACENT STRUCTURES AND OTHER FACILITIES AND INJURY TO PERSONS.
11. PROMPTLY REPAIR DAMAGE TO ADJACENT FACILITIES CAUSED BY DEMOLITION AND CONSTRUCTION OPERATIONS.
12. ALL UTILITY INFORMATION SHALL BE VERIFIED BY THE CONTRACTOR. CALL "JULIE", THE ILLINOIS ONE-CALL SYSTEM (811) FOR MARKING OF UNDERGROUND UTILITY LOCATIONS. NOTIFY AMERICAN STRUCTUREPOINT IF ANY VARIATION EXISTS.
13. MAINTAIN EXISTING UTILITIES TO REMAIN IN SERVICE AND PROTECT AGAINST DAMAGE DURING DEMOLITION AND CONSTRUCTION OPERATIONS. ANY UTILITY OUTAGE REQUIRES A MINIMUM 14 DAY NOTICE TO THE CONTRACTING OFFICER.
14. ALL UTILITIES TO BE REMOVED SHALL BE DISCONNECTED AND CAPPED AT THE NEAREST CONNECTION POINT. ANY UTILITIES UNDER ROADWAYS TO BE CAPPED, NOT REMOVED. UTILITIES SHALL BE CAPPED IN ACCORDANCE WITH THE GUIDELINES OF AUTHORITY HAVING JURISDICTION. COORDINATE REMOVAL AND DISCONNECTION OF UTILITIES WITH APPROPRIATE AUTHORITY.
15. THE CONTRACTOR SHALL PROTECT AND NOT DESTROY THE BASE SURVEY CONTROL POINTS DURING DEMOLITION AND CONSTRUCTION.
16. CONTRACTOR SHALL SAVE AS MANY TREES AS POSSIBLE, AS INDICATED ON THE DRAWINGS.
17. DEMOLITION OF ELECTRIC LINES SHALL MEET UTILITY AGENCY REQUIREMENTS.
18. CONTRACTOR SHALL COORDINATE REMOVAL AN/OR SALVAGE OF EQUIPMENT AND CONTROLS FOR FUEL PUMPS WITH MEP PLANS.

SHEET KEYNOTES

1. EXISTING SANITARY SEWER STRUCTURE TO BE REMOVED.
2. EXISTING SANITARY SEWER TO BE REMOVED.
3. CAP AND SEAL EXISTING SANITARY SEWER PIPE.
4. EXISTING GAS METER TO BE REMOVED. (COORDINATE WITH AMEREN)
5. EXISTING GAS LINE TO BE REMOVED. (GAS LINE OWNED BY AMEREN AND HAS BEEN SHUT OFF AT A VALVE UPSTREAM. CONTRACTOR TO COORDINATE REMOVAL WITH AMEREN).
6. EXISTING WATER LINE TO BE REMOVED.
7. EXISTING FIRE VALVE SHUT OFF TO BE REMOVED.
8. EXISTING HOSE BIB TO BE REMOVED.
9. CAP AND SEAL EXISTING WATER LINE.
10. EXISTING TRANSFORMER TO BE RELOCATED.
11. EXISTING UNDERGROUND ELECTRIC TO BE RELOCATED (CONTRACTOR TO COORDINATE WITH AMEREN).
12. CAP AND SEAL EXISTING ELECTRIC SERVICE/CONDUIT. DISCONNECT EXISTING SERVICE AT NEAREST MANHOLE.
13. EXISTING TELEPHONE CROSS BOX TO BE REMOVED.
14. EXISTING UNDERGROUND FIBER OPTICS TO BE REMOVED.
15. CAP AND SEAL EXISTING FIBER OPTIC SERVICE/CONDUIT. DISCONNECT SERVICE AT NEAREST MANHOLE.
16. EXISTING CONTROL CABINET TO BE RELOCATED.
17. EXISTING GAS PUMP TO BE RELOCATED.
18. EXISTING VENT TO BE REMOVED.
19. EXISTING LID FOR UNDERGROUND FUEL TANKS TO BE SALVAGED TO OWNER.
20. UNDERGROUND FUEL TANKS TO BE REMOVED.
21. EXISTING STEAM LINES AND CONCRETE TRENCH TO BE REMOVED.
22. CAP AND SEAL STEAM LINES AND EXISTING CONCRETE TRENCH. PROVIDE 8" THICK CONCRETE CAP AT TERMINATION OF TRENCH.
23. EXISTING STORM STRUCTURE TO BE REMOVED.
24. EXISTING STORM SEWER TO BE REMOVED.
25. PLUG AND SEAL EXISTING STORM SEWER.

DEMOLITION LEGEND

- UTILITY TO BE REMOVED
- LIMITS OF WORK

EXISTING LEGEND

- STEAM MANHOLE
- CURB INLET
- DRAINAGE INLET
- CLEAN OUT
- COMBINATION MANHOLE
- SANITARY MANHOLE
- DRAINAGE MANHOLE
- LID
- GUARD POST
- SIGN
- ELECTRIC METER
- ELECTRIC MANHOLE
- LIGHT POLE
- TRANSFORMER
- GAS METER
- VALVE (GAS & WATER)
- TERMITE BAIT SYSTEM
- TELEPHONE MANHOLE
- TELEPHONE PEDESTAL
- TELEPHONE BOX
- FIRE VALVE SHUT OFF
- HOSE BIB
- WATER METER
- VENT
- BUSH
- CONIFEROUS TREE
- DECIDUOUS TREE

- EU_x — UNDERGROUND ELECTRIC LINE
- FO — BURIED FIBER OPTIC LINE
- G_x — UNDERGROUND GAS
- S — UNDERGROUND STEAM LINE
- T — UNDERGROUND COMMUNICATIONS
- W_x — UNDERGROUND WATER LINE
- SS_x — SANITARY SEWER
- SD_x — STORM SEWER
- TR — TOP OF RIM ELEVATION
- INV — INVERT ELEVATION
- VCP — VITRIFIED CLAY PIPE

1. POSSIBLE UNDERGROUND ELECTRIC LINE PER ELECTRICAL RECORD DRAWING E-1, DATED OCTOBER 7, 1959.
2. POSSIBLE STORM SEWER PER PLUMBING AND ELECTRICAL RECORD DRAWING 26A-4, DATED JUNE 15, 1933.
3. POSSIBLE SANITARY INTERCEPTOR TRAP PER PLUMBING AND ELECTRICAL RECORD DRAWING 26A-4, DATED JUNE 15, 1933.
4. POSSIBLE STEAM PIPE AND CONCRETE TRENCH PER BUILDING NO. 26 AS-BUILT DRAWING 26A-2, DATED JUNE 15, 1933.
5. POSSIBLE SIGNAL / FIRE ALARM LINE PER ELECTRICAL RECORD DRAWING E-1, DATED AUGUST 25, 1986.
6. POSSIBLE STORM SEWER PIPE/STRUCTURE, PER CAD FILE PROVIDED BY THE VA. (NO VISUAL EVIDENCE FOUND)
7. POSSIBLE ELECTRIC DUCTS, PER CAD FILE PROVIDED BY THE VA. (NO VISUAL EVIDENCE FOUND)
8. POSSIBLE ELECTRIC DUCTS PER ELECTRICAL DISTRIBUTION RECORD DRAWING, DATED JUNE 1, 1937.
9. POSSIBLE WATER LINE, PER CAD FILE PROVIDED BY THE VA. (NO VISUAL EVIDENCE FOUND)
10. POSSIBLE STEAM LINE AND TRENCH, PER CAD FILE PROVIDED BY THE VA. (NO VISUAL EVIDENCE FOUND)
11. POSSIBLE WATER LINE PER SPRINKLER SYSTEM RECORD DRAWINGS, DATED OCTOBER 1981.
12. APPROXIMATE LOCATION OF EXISTING TREE. TO BE PROTECTED DURING CONSTRUCTION.

100% CONSTRUCTION DOCUMENTS

Revisions:	Date

CONSULTANTS:

Applied Engineering Services
9100 Keystone Crossing, Suite 200
Indianapolis, IN 46240

ARCHITECT/ENGINEERS:

AMERICAN STRUCTUREPOINT INC.
7260 Shadeland Station | Indianapolis, Indiana 46256
TEL 317.547.5580 | FAX 317.543.0270
www.structurepoint.com

Drawing Title: UTILITY DEMOLITION PLAN

Approved: Project Director

Project Title: VA Medical Center, Illiana Healthcare System, Demolish Buildings 12, 26, 40, and 74

Location: Danville, Illinois

Date: 2014-12-12 | Checked: RLN / SAC | Drawn: JLG

Project Number: 550-11-116

Building Number: 26

Drawing Number: 26-CD-102

Dwg. 12 of 36

Office of Construction and Facilities Management

VA U.S. Department of Veterans Affairs

VA FORM 08-6231

P:\2010\00629\D. Drawings\0004\Civil\Plan Set\12_550-11-116-26-CD-102.dwg 12-15-14 04:49:53 PM emiller

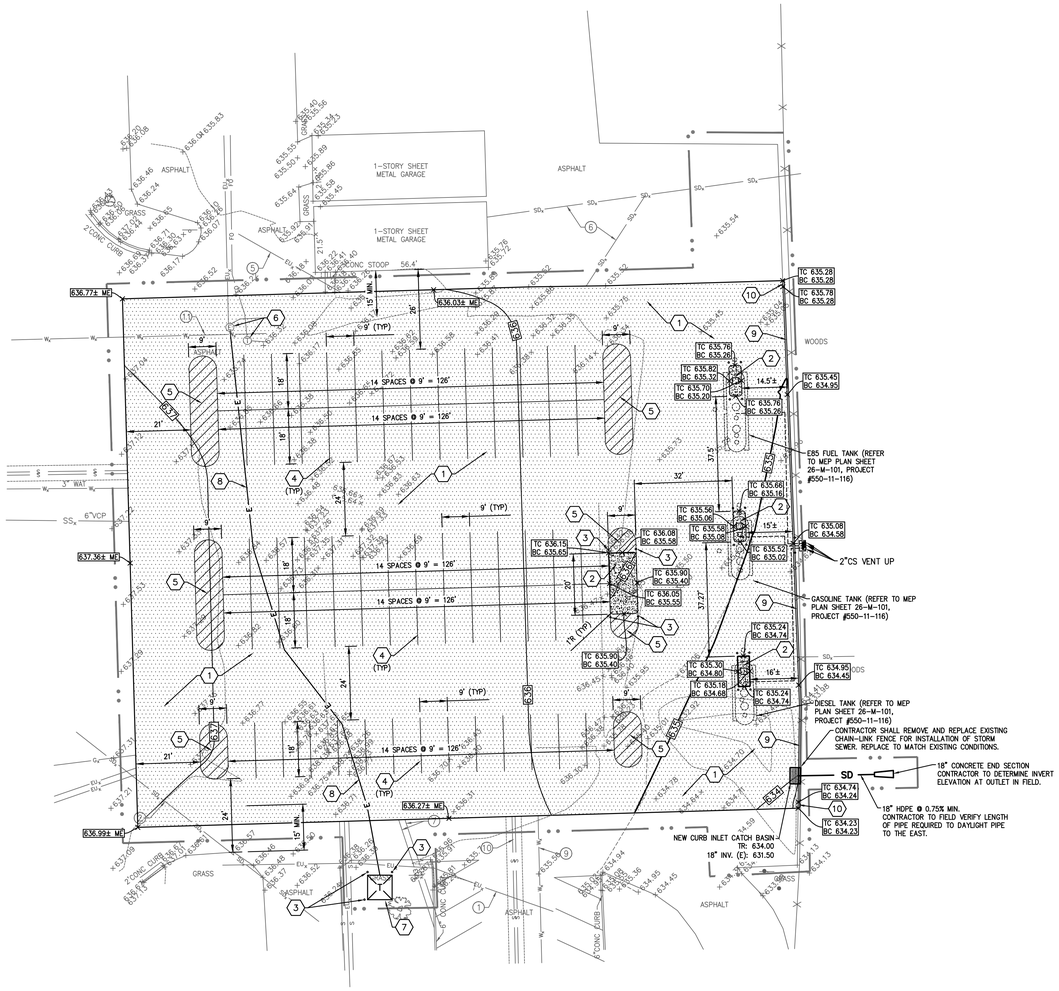

DEVELOPMENT PLAN

1" = 20'

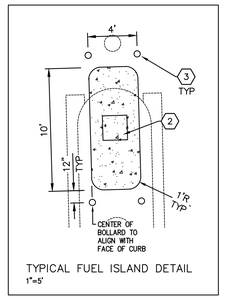

TYPICAL FUEL ISLAND DETAIL
1"=5'

GENERAL NOTES

1. ALL WORK TO CONFORM TO FEDERAL, STATE AND LOCAL REGULATIONS.
2. CONTRACTOR SHALL KEEP ADJOINING PROPERTIES CLEAN OF CONSTRUCTION DEBRIS AND CONSTRUCTION TRAFFIC AT ALL TIMES.
3. THE CONTRACTOR SHALL PROTECT AND NOT DESTROY THE BASE SURVEY CONTROL POINTS DURING DEMOLITION AND CONSTRUCTION.
4. ALL DIMENSIONS ARE TO THE EDGE OF PAVEMENT OR FACE OF CURB, UNLESS NOTED OTHERWISE.
5. ALL DIMENSIONS ARE TO FACE OF BRICK OR FACING MATERIAL, WHERE APPLICABLE.
6. ALL DIMENSIONS ARE PARALLEL WITH, OR PERPENDICULAR TO BASE LINES, PROPERTY LINES OR BUILDING LINES, UNLESS OTHERWISE NOTED.
7. THE CONTRACTOR SHALL VERIFY ALL DIMENSIONS IN THE FIELD PRIOR TO THE START OF CONSTRUCTION. THE CONTRACTOR SHALL BE RESPONSIBLE FOR ALL FIELD DIMENSIONS. IF ANY DISCREPANCIES ARE FOUND IN THESE PLANS FROM ACTUAL FIELD CONDITIONS, THE CONTRACTOR SHALL NOTIFY AMERICAN STRUCTUREPOINT IMMEDIATELY.
8. PROVIDE SMOOTH TRANSITIONS FROM NEW AREAS TO EXISTING FEATURES AS NECESSARY.
9. RESURFACE OR RECONSTRUCT AT LEAST TO ORIGINAL CONDITIONS ALL AREAS WHERE THE EXISTING PAVEMENT OR LAWNS ARE DAMAGED DURING CONSTRUCTION FROM TRAFFIC BY CONTRACTORS, SUBCONTRACTORS OR SUPPLIERS AFTER CONSTRUCTION WORK IS COMPLETE.
10. EXISTING PAVEMENT TO BE SAW CUT IN ALL AREAS WHERE INDICATED NEW PAVEMENT TO JOIN EXISTING.
11. THE EDGE OF THE EXISTING ASPHALT PAVEMENT SHALL BE PROPERLY SEALED WITH A TACK COAT MATERIAL IN ALL AREAS WHERE NEW ASPHALT PAVEMENT IS INDICATED TO JOIN EXISTING ASPHALT.
12. CONCRETE SAW CUTTING SHOULD NOT OCCUR UNTIL THE CONCRETE CAN BE SAWED WITHOUT UNACCEPTABLE RAVELING AND CAN SUPPORT WEIGHT. SAW CUTTING SHOULD BE PERFORMED AS SOON AS RAVELING STOPS BASED ON TRIAL CUTS. PROVIDE A NEAT CUT WHICH IS TRUE IN ALIGNMENT.
13. ALL JOINTS ARE TO CONTINUE THROUGH THE CURB.
14. RADIAL JOINTS SHALL BE NO SHORTER THAN 1.5'.
15. CONTRACTOR SHALL USE A THICKENED EXPANSION JOINT AROUND THE PERIMETER OF ANY BLOCK OUT IN THE CONCRETE PAVING.
16. ALL CONSTRUCTION JOINTS SHALL BE SAWN, CLEANED OF DEBRIS, BLOWN DRY AND SEALED WITH THE APPROPRIATE SEALANT ACCORDING TO MANUFACTURES DIRECTIONS.
17. ALL ASPHALT TO BE IN ACCORDANCE WITH ILLINOIS D.O.T. STANDARD SPECIFICATIONS RELATIVE TO MATERIAL, MIX, PLACEMENT AND WORKMANSHIP.
18. ALL SIDEWALKS SHALL COMPLY WITH ADA STANDARDS. MAXIMUM CROSS SLOPE OF ¼" PER FOOT AND MAXIMUM LONGITUDINAL SLOPE OF 1:20.

SHEET KEYNOTES

1. ASPHALT PAVEMENT
2. RAISED CONCRETE ISLANDS
3. CONCRETE BOLLARDS
4. PARKING SPACE STRIPING
5. NO PARKING STRIPING
6. EXISTING UTILITY MANHOLES TO BE ADJUSTED AS NECESSARY TO MATCH FINISHED GRADE.
7. RELOCATE EXISTING TRANSFORMER WITH NEW CONCRETE PAD. CONTRACTOR TO REFEED ELECTRIC SERVICE TO BUILDINGS 85 & 128 FROM RELOCATED TRANSFORMER. (COORDINATE WITH AMEREN). TRANSFORMER PAD SIZE PER MEP PLAN SHEET 26-E-101, PROJECT #550-11-116.
8. ELECTRIC LINE (REFER TO MEP PLANS).
9. 6" STANDING CURB
10. CURB TAPER

LEGEND

	NEW ASPHALT PAVEMENT
	CONCRETE
	LIMITS OF WORK
M.E.	MATCH EXISTING
000	PROPOSED CONTOURS
000.00	PROPOSED SPOT ELEVATION
TC 000.00 BC 000.00	PROPOSED CURB ELEVATION

BENCHMARK INFORMATION (NAVD 1988)

BCA BENCHMARK 52
USNGS BM "C 300 1986"
TOP OF STEEL ROD IN LIMITED STATES NATIONAL GEODETIC SURVEY VAULT WITH ACCESS CORNER STAMPED "C 300 1986" FOUND 22 FEET SOUTH OF THE SOUTH EDGE OF MAIN STREET AND 9 FEET EAST OF THE EAST EDGE OF THE EAST ACCESS DRIVE TO THE VETERANS ADMINISTRATION HOSPITAL, DANVILLE, VERMILION COUNTY, ILLINOIS.
ELEV= 640.71

BCA BENCHMARK 462
CHISELED SQUARE SET ON TOP OF THE NORTHEASTERLY SIDE OF A CONCRETE LIGHT POLE BASE, 225 FEET SOUTHEAST OF THE SOUTHEAST CORNER OF A TWO STORY BRICK BUILDING (VETERANS ADMINISTRATION BUILDING NUMBER 60) AND 16 FEET SOUTHWEST OF THE CENTERLINE OF VETERANS ADMINISTRATION ACCESS DRIVE, DANVILLE, VERMILION COUNTY, ILLINOIS.
ELEV – 632.65

NOTE:
CONTRACTOR SHALL PROVIDE ELECTRIC SERVICE TO UNDERGROUND STORAGE TANKS AND CONTROLS FROM THE RELOCATED TRANSFORMER AS SHOWN ON THE MEP PLANS. UNDERGROUND STORAGE TANKS AND ASSOCIATED PIPING/UTILITY SERVICES SHOWN ON THIS SHEET ARE FOR REFERENCE ONLY. REFER TO MEP PLANS FOR ADDITIONAL INFORMATION.

NOTE:
CONTRACTOR SHALL REMOVE ALL BRUSH AND VEGETATION AS REQUIRED FOR NEW STORM SEWER INSTALLATION.

NOTE:
CONTRACTOR TO VERIFY LOCATION AND DEPTH OF EXISTING UTILITIES PRIOR TO COMMENCING ANY CONSTRUCTION. CONTACT ENGINEER IF VARIATION EXISTS.

CAUTION !!
THE LOCATIONS OF ALL EXISTING UNDERGROUND UTILITIES SHOWN ON THIS PLAN ARE BASED UPON ABOVE GROUND EVIDENCE (including, but not limited to, manholes, inlets, valves, and marks made upon the ground by others) AND ARE SPECULATIVE IN NATURE. THERE MAY ALSO BE OTHER EXISTING UNDERGROUND UTILITIES FOR WHICH THERE IS NO ABOVE GROUND EVIDENCE OR FOR WHICH NO ABOVE GROUND EVIDENCE WAS OBSERVED. THE EXACT LOCATIONS OF SAID EXISTING UNDERGROUND UTILITIES SHALL BE VERIFIED BY THE CONTRACTOR PRIOR TO ANY AND ALL CONSTRUCTION.

100% CONSTRUCTION DOCUMENTS

Revisions:	Date

CONSULTANTS:
Applied Engineering Services
9100 Keystone Crossing, Suite 200
Indianapolis, IN 46240

ARCHITECT/ENGINEERS:
AMERICAN STRUCTUREPOINT INC.
7260 Shadeland Station | Indianapolis, Indiana 46256
TEL 317.547.5580 | FAX 317.543.0270
www.structurepoint.com

Drawing Title: DEVELOPMENT PLAN
Approved: Project Director
Project Title: VA Medical Center, Illiana Healthcare System, Demolish Buildings 12, 26, 40, and 74
Location: Danville, Illinois
Date: 2014-12-12
Checked: RLN / SAC
Drawn: JLG
Project Number: 550-11-116
Building Number: 26
Drawing Number: 26-CS-101
Dwg. 13 of 36

Office of Construction and Facilities Management
VA U.S. Department of Veterans Affairs

VA FORM 08-6231

P:\2010\00629\D. Drawings\0004\Civil\Plan Set\13_550-11-116-26-CS-101.dwg 12-15-14 04:50:07 PM emiller

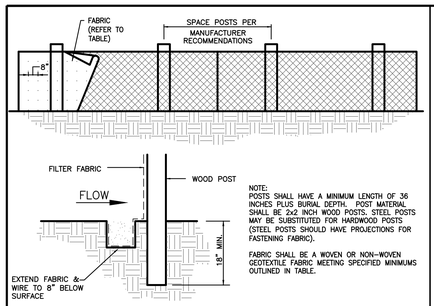

NOTE:
POSTS SHALL HAVE A MINIMUM LENGTH OF 36 INCHES PLUS BURIAL DEPTH. POST MATERIAL SHALL BE 2x2 INCH WOOD POSTS. STEEL POSTS MAY BE SUBSTITUTED FOR HARDWOOD POSTS (STEEL POSTS SHOULD HAVE PROJECTIONS FOR FASTENING FABRIC).

FABRIC SHALL BE A WOVEN OR NON-WOVEN GEOTEXTILE FABRIC MEETING SPECIFIED MINIMUMS OUTLINED IN TABLE.

SILT FENCE INSTALLATION REQUIREMENTS

SITE PREPARATION

1. PLAN FOR THE FENCE TO BE AT LEAST 10 ft. FROM THE TOE OF THE SLOPE TO PROVIDE A SEDIMENT STORAGE AREA.
2. PROVIDE ACCESS TO THE AREA IF SEDIMENT CLEANOUT WILL BE NEEDED.

FENCE CONSTRUCTION

1. LAY OUT THE LOCATION OF THE FENCE SO THAT IT IS PARALLEL TO THE CONTOUR OF THE SLOPE AND AT LEAST 10 FEET BEYOND THE TOE OF THE SLOPE TO PROVIDE A SEDIMENT STORAGE AREA. TURN THE ENDS OF THE FENCE UP SLOPE SUCH THAT THE POINT OF CONTACT BETWEEN THE GROUND AND THE BOTTOM OF THE FENCE END TERMINATES AT A HIGHER ELEVATION THAN THE TOP OF THE FENCE AT ITS LOWEST POINT.
2. EXCAVATE AN EIGHT-INCH DEEP BY FOUR-INCH WIDE TRENCH ALONG THE ENTIRE LENGTH OF THE FENCE LINE. INSTALLATION BY PLOWING IS ALSO ACCEPTABLE.
3. INSTALL THE SILT FENCE WITH THE FILTER FABRIC LOCATED ON THE UP-SLOPE SIDE OF THE EXCAVATED TRENCH AND THE SUPPORT POSTS ON THE DOWN-SLOPE SIDE OF THE TRENCH.
4. DRIVE THE SUPPORT POSTS AT LEAST 18 INCHES INTO THE GROUND, TIGHTLY STRETCHING THE FABRIC BETWEEN THE POSTS AS EACH IS DRIVEN INTO THE SOIL. A MINIMUM OF 12 INCHES OF THE FILTER FABRIC SHOULD EXTEND INTO THE TRENCH. (IF IT IS NECESSARY TO JOIN THE ENDS OF TWO FENCES, USE THE WRAP JOINT METHOD.)
5. LAY THE LOWER FOUR INCHES OF FILTER FABRIC ON THE BOTTOM OF THE TRENCH AND EXTEND IT TOWARD THE UP-SLOPE SIDE OF THE TRENCH.
6. BACKFILL THE TRENCH WITH SOIL MATERIAL AND COMPACT IT IN PLACE.

SILT FENCE MAINTENANCE REQUIREMENTS

1. INSPECT WITHIN 24 HOURS OF A RAIN EVENT AND AT LEAST ONCE EVERY SEVEN CALENDAR DAYS.
2. IF FENCE FABRIC TEARS, STARTS TO DECOMPOSE, OR IN ANY WAY BECOMES INEFFECTIVE, REPLACE THE AFFECTED PORTION IMMEDIATELY.
3. REMOVE DEPOSITED SEDIMENT WHEN IT IS CAUSING THE FILTER FABRIC TO BULGE OR WHEN IT REACHES ONE-HALF THE HEIGHT OF THE FENCE AT ITS LOWEST POINT. WHEN CONTRIBUTING DRAINAGE AREA HAS BEEN STABILIZED, REMOVE THE FENCE AND SEDIMENT DEPOSITS, GRADE THE SITE TO BLEND WITH THE SURROUNDING AREA, AND STABILIZE.

PHYSICAL PROPERTY	WOVEN GEOTEXTILE FABRIC	NON-WOVEN GEOTEXTILE FABRIC
FILTERING EFFICIENCY	85%	85%
TEXTILE STRENGTH AT 20% ELONGATION STANDARD STRENGTH EXTRA STRENGTH	30 LBS. PER LINEAL INCH 50 LBS. PER LINEAL INCH	50 LBS. PER LINEAL INCH 70 LBS. PER LINEAL INCH
SLURRY FLOW RATE	0.3 GAL./MIN./SQUARE FOOT	4.5 GAL./MIN./SQUARE FOOT
WATER FLOW RATE	15 GAL./MIN./SQUARE FOOT	220 GAL./MIN./SQUARE FOOT
UV RESISTANCE	70%	85%
POST SPACING	7 FEET	5 FEET

SILT FENCE INSTALLATION

SEASONAL SOIL PROTECTION CHART

STABILIZATION PRACTICE	JAN.	FEB.	MAR.	APR.	MAY	JUNE	JULY	AUG.	SEPT.	OCT.	NOV.	DEC.
PERMANENT SEEDING		A										
DORMANT SEEDING	B									B		
TEMPORARY SEEDING		C	E				D					

A = KENTUCKY BLUEGRASS 100 LBS./ACRE; CREEPING RED FESCUE 100 LBS./ACRE; HYDROSEEDED
B = KENTUCKY BLUEGRASS 120 LBS./ACRE; CREEPING RED FESCUE 120 LBS./ACRE; HYDROSEEDED
C = SPRING OATS 3 BUSHELS/ACRE
D = WHEAT OR RYE 2 BUSHELS/ACRE
E = ANNUAL RYE GRASS 40 LBS./ACRE (1 LB/1000 SQ. FT.)
/\/ = IRRIGATION NEEDED DURING JUNE, JULY, AUGUST AND/OR SEPTEMBER

SEASONAL SOIL PROTECTION

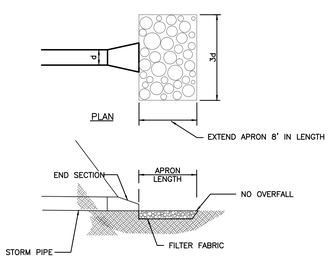

RIPRAP INSTALLATION REQUIREMENTS

1. FOUNDATION SHALL BE GEOTEXTILE FABRIC FOR STABILIZATION AND WELL-GRADED FILTRATION OR GRAVEL FILTER LAYER AT LEAST 6 IN. THICK
2. STONE SHALL BE HARD, ANGULAR, AND HIGHLY WEATHER-RESISTANT RIPRAP STONE AT A THICKNESS OF 12 IN. MINIMUM OR TWO TIMES THE STONE DIAMETER, WHICHEVER IS GREATER.
3. MAKE SURE THE TOP OF THE RIPRAP APRON IS LEVEL WITH OR SLIGHTLY BELOW THE RECEIVING STREAM. (RIPRAP SHOULD NOT RESTRICT THE CHANNEL OR PRODUCE AN OVERFALL).

RIPRAP MAINTENANCE REQUIREMENTS

1. INSPECT PERIODICALLY FOR DISPLACED ROCK MATERIAL, SLUMPING, AND EROSION AT EDGES, ESPECIALLY DOWNSTREAM OR DOWNSLOPE.

RIPRAP OUTLET PROTECTION

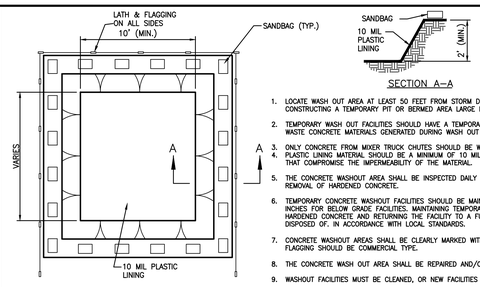

1. LOCATE WASH OUT AREA AT LEAST 50 FEET FROM STORM DRAINS, OPEN DITCHES, OR BODIES OF WATER. DO NOT ALLOW RUNOFF FROM THIS AREA BY CONSTRUCTING A TEMPORARY PIT OR BERMED AREA LARGE ENOUGH FOR LIQUID AND SOLID WASTE.
2. TEMPORARY WASH OUT FACILITIES SHOULD HAVE A TEMPORARY PIT AREA OF SUFFICIENT VOLUME TO COMPLETELY CONTAIN ALL LIQUID AND SOLID WASTE CONCRETE MATERIALS GENERATED DURING WASH OUT PROCEDURES.
3. ONLY CONCRETE FROM MIXER TRUCK CHUTES SHOULD BE WASHED INTO WASH OUT PIT.
4. PLASTIC LINING MATERIAL SHOULD BE A MINIMUM OF 10 MIL POLYETHYLENE SHEETING AND SHOULD BE FREE OF HOLES, TEARS, OR OTHER DEFECTS THAT COMPROMISE THE IMPERMEABILITY OF THE MATERIAL.
5. THE CONCRETE WASHOUT AREA SHALL BE INSPECTED DAILY FOR PUNCTURES OR TEARS IN THE PLASTIC LINER. THE LINER SHALL BE REPLACED UPON REMOVAL OF HARDENED CONCRETE.
6. TEMPORARY CONCRETE WASHOUT FACILITIES SHOULD BE MAINTAINED TO PROVIDE ADEQUATE HOLDING CAPACITY WITH A MINIMUM FREEBOARD OF 12 INCHES FOR BELOW GRADE FACILITIES. MAINTAINING TEMPORARY CONCRETE WASH OUT FACILITIES SHOULD INCLUDE REMOVING AND DISPOSING OF HARDENED CONCRETE AND RETURNING THE FACILITY TO A FUNCTIONAL CONDITION. HARDENED CONCRETE MATERIALS SHOULD BE REMOVED AND DISPOSED OF. IN ACCORDANCE WITH LOCAL STANDARDS.
7. CONCRETE WASHOUT AREAS SHALL BE CLEARLY MARKED WITH LATH & FLAGGING AND A SIGN POSTED AND LABELED "CONCRETE WASHOUT". LATH AND FLAGGING SHOULD BE COMMERCIAL TYPE.
8. THE CONCRETE WASH OUT AREA SHALL BE REPAIRED AND/OR ENLARGED AS NECESSARY TO MAINTAIN CAPACITY FOR WASTED CONCRETE.
9. WASHOUT FACILITIES MUST BE CLEANED, OR NEW FACILITIES MUST BE CONSTRUCTED AND READY FOR USE ONCE THE WASHOUT IS 75% FULL.
10. AT THE END OF CONSTRUCTION, ALL CONCRETE SHALL BE REMOVED FROM THE SITE AND LEGALLY DISPOSED OF AT AN APPROVED SITE

CONCRETE WASHOUT

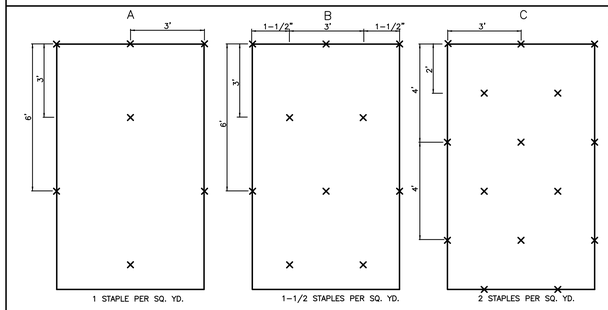

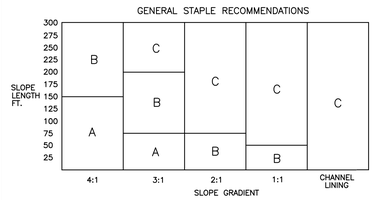

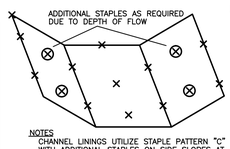

NOTES
CHANNEL LININGS UTILIZE STAPLE PATTERN "C" WITH ADDITIONAL STAPLES ON SIDE SLOPES AT PROJECTED WATER LINE.

STAPLE PATTERNS APPLY TO ALL NORTH AMERICAN GREEN EROSION CONTROL BLANKETS. STAPLE PATTERNS MAY VARY DEPENDING UPON SOIL TYPE AND AVERAGE RAINFALL.

AT SLOPE LENGTHS GREATER THAN 300 FEET OR WHERE DRAINAGE OVER LARGE AREAS IS DIRECTED ONTO THE BLANKETS STAPLE PATTERN "C" SHOULD BE UTILIZED.

EROSION CONTROL BLANKET (SURFACE APPLIED) INSTALLATION REQUIREMENTS

1. SELECT THE TYPE AND WEIGHT OF EROSION CONTROL BLANKET TO FIT THE SITE CONDITIONS (e.g., SLOPE, CHANNEL FLOW VELOCITY).
2. INSTALL ANY PRACTICES NEEDED TO CONTROL EROSION AND RUNOFF, SUCH AS TEMPORARY OR PERMANENT DIVERSION, SEDIMENT BASIN OR TRAP, SILT FENCE, AND STRAW BALE DAM.
3. GRADE THE SITE AS SPECIFIED IN THE CONSTRUCTION PLAN.
4. ADD TOPSOIL WHERE APPROPRIATE.
5. PREPARE THE SEEDBED, FERTILIZE (AND LIME, IF NEEDED), AND SEED THE AREA IMMEDIATELY AFTER GRADING.
6. FOLLOWING MANUFACTURER'S DIRECTIONS, LAY THE BLANKETS ON THE SEEDED AREA SUCH THAT THEY ARE IN CONTINUOUS CONTACT WITH THE SOIL AND THAT THE UPSLOPE OR UPSTREAM ONES OVERLAP THE LOWER ONES BY AT LEAST 8 in.
7. TUCK THE UPPERMOST EDGE OF THE UPPER BLANKETS INTO A CHECK SLOT (SILT TRENCH), BACKFILL WITH SOIL, AND TAMP DOWN.
8. ANCHOR THE BLANKETS AS SPECIFIED BY THE MANUFACTURER. THIS TYPICALLY INVOLVES DRIVING 6-8 in. METAL STAPLES INTO THE GROUND IN A PATTERN DETERMINED BY THE SITE CONDITIONS.

EROSION CONTROL BLANKET (SURFACE APPLIED) MAINTENANCE REQUIREMENTS

1. DURING VEGETATIVE ESTABLISHMENT INSPECT AFTER STORM EVENTS FOR ANY EROSION BELOW THE BLANKET.
2. IF ANY AREA SHOWS EROSION PULL BACK THAT PORTION OF THE BLANKET COVERING IT, ADD SOIL, RE-SEED THE AREA, AND RE-LAY AND STAPLE THE BLANKET.
3. AFTER VEGETATIVE ESTABLISHMENT CHECK THE TREATED AREA PERIODICALLY.

EROSION CONTROL BLANKET

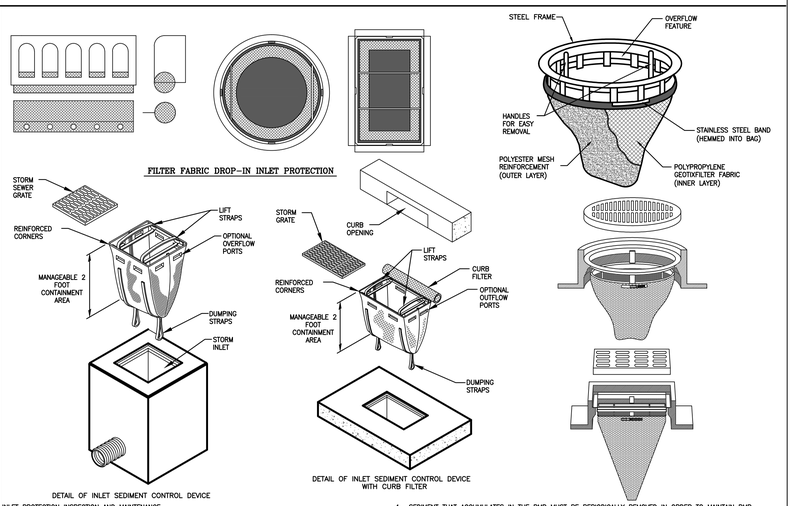

INLET PROTECTION INSPECTION AND MAINTENANCE

1. INSPECT BMPS PRIOR TO FORECAST RAIN, DAILY DURING EXTENDED RAIN EVENTS, AFTER RAIN EVENTS, WEEKLY DURING THE RAINY SEASON, AND AT TWO-WEEK INTERVALS DURING THE NON-RAINY SEASON.
2. FILTER FABRIC FENCES. IF THE FABRIC BECOMES CLOGGED, TORN, OR DEGRADES, IT SHOULD BE REPLACED. MAKE SURE THE STAKES ARE SECURELY DRIVEN IN THE GROUND AND ARE IN GOOD SHAPE (I.E., NOT BENT, CRACKED, OR SPLINTERED, AND ARE REASONABLY PERPENDICULAR TO THE GROUND). REPLACE DAMAGED STAKES.
3. GRAVEL FILTERS. IF THE GRAVEL BECOMES CLOGGED WITH SEDIMENT, IT MUST BE CAREFULLY REMOVED FROM THE INLET AND EITHER CLEANED OR REPLACED. SINCE CLEANING GRAVEL AT A CONSTRUCTION SITE MAY BE DIFFICULT, CONSIDER USING THE SEDIMENT-LADEN STONE AS FILL MATERIAL AND PUT FRESH STONE AROUND THE INLET. INSPECT BAGS FOR HOLES, GASHES, AND SNAGS, AND REPLACE BAGS AS NEEDED. CHECK GRAVEL BAGS FOR PROPER ARRANGEMENT AND DISPLACEMENT.
4. SEDIMENT THAT ACCUMULATES IN THE BMP MUST BE PERIODICALLY REMOVED IN ORDER TO MAINTAIN BMP EFFECTIVENESS. SEDIMENT SHOULD BE REMOVED WHEN THE SEDIMENT ACCUMULATION REACHES ONE-THIRD OF THE BARRIER HEIGHT. SEDIMENT REMOVED DURING MAINTENANCE MAY BE INCORPORATED INTO EARTHWORK ON THE SITE ORE DISPOSED AT AN APPROPRIATE LOCATION.
5. REMOVE STORM DRAIN INLET PROTECTION ONCE THE DRAINAGE AREA IS STABILIZED.
6. CLEAN AND RE-GRADE AREA AROUND THE INLET AND CLEAN THE INSIDE OF THE STORM DRAIN INLET AS IT MUST BE FREE OF SEDIMENT AND DEBRIS AT THE TIME OF FINAL INSPECTION.

DROP-IN INLET PROTECTION

GENERAL NOTES

1. ALL WORK TO CONFORM TO FEDERAL, STATE AND LOCAL REGULATIONS.
2. CONTRACTOR SHALL KEEP ADJOINING PROPERTIES CLEAN OF CONSTRUCTION DEBRIS AND CONSTRUCTION TRAFFIC AT ALL TIMES.
3. THE CONTRACTOR SHALL PROTECT AND NOT DESTROY THE BASE SURVEY CONTROL POINTS DURING DEMOLITION AND CONSTRUCTION.
4. ALL DIMENSIONS ARE TO THE EDGE OF PAVEMENT OR FACE OF CURB, UNLESS NOTED OTHERWISE.
5. ALL DIMENSIONS ARE TO FACE OF BRICK OR FACING MATERIAL, WHERE APPLICABLE.
6. ALL DIMENSIONS ARE PARALLEL WITH, OR PERPENDICULAR TO BASE LINES, PROPERTY LINES OR BUILDING LINES, UNLESS OTHERWISE NOTED.
7. THE CONTRACTOR SHALL VERIFY ALL DIMENSIONS IN THE FIELD PRIOR TO THE START OF CONSTRUCTION. THE CONTRACTOR SHALL BE RESPONSIBLE FOR ALL FIELD DIMENSIONS. IF ANY DISCREPANCIES ARE FOUND IN THESE PLANS FROM ACTUAL FIELD CONDITIONS, THE CONTRACTOR SHALL NOTIFY AMERICAN STRUCTUREPOINT IMMEDIATELY.
8. PROVIDE SMOOTH TRANSITIONS FROM NEW AREAS TO EXISTING FEATURES AS NECESSARY.
9. RESURFACE OR RECONSTRUCT AT LEAST TO ORIGINAL CONDITIONS ALL AREAS WHERE THE EXISTING PAVEMENT OR LAWNS ARE DAMAGED DURING CONSTRUCTION FROM TRAFFIC BY CONTRACTORS, SUBCONTRACTORS OR SUPPLIERS AFTER CONSTRUCTION WORK IS COMPLETE.
10. EXISTING PAVEMENT TO BE SAW CUT IN ALL AREAS WHERE INDICATED NEW PAVEMENT TO JOIN EXISTING.
11. THE EDGE OF THE EXISTING ASPHALT PAVEMENT SHALL BE PROPERLY SEALED WITH A TACK COAT MATERIAL IN ALL AREAS WHERE NEW ASPHALT PAVEMENT IS INDICATED TO JOIN EXISTING ASPHALT.
12. CONCRETE SAW CUTTING SHOULD NOT OCCUR UNTIL THE CONCRETE CAN BE SAWED WITHOUT UNACCEPTABLE RAVELING AND CAN SUPPORT WEIGHT. SAW CUTTING SHOULD BE PERFORMED AS SOON AS RAVELING STOPS BASED ON TRIAL CUTS. PROVIDE A NEAT CUT WHICH IS TRUE IN ALIGNMENT.
13. ALL JOINTS ARE TO CONTINUE THROUGH THE CURB.
14. RADIAL JOINTS SHALL BE NO SHORTER THAN 1.5'.
15. CONTRACTOR SHALL USE A THICKENED EXPANSION JOINT AROUND THE PERIMETER OF ANY BLOCK OUT IN THE CONCRETE PAVING.
16. ALL CONSTRUCTION JOINTS SHALL BE SAWN, CLEANED OF DEBRIS, BLOWN DRY AND SEALED WITH THE APPROPRIATE SEALANT ACCORDING TO MANUFACTURES DIRECTIONS.
17. ALL ASPHALT TO BE IN ACCORDANCE WITH ILLINOIS D.O.T. STANDARD SPECIFICATIONS RELATIVE TO MATERIAL, MIX, PLACEMENT AND WORKMANSHIP.
18. ALL SIDEWALKS SHALL COMPLY WITH ADA STANDARDS. MAXIMUM CROSS SLOPE OF ¼" PER FOOT AND MAXIMUM LONGITUDINAL SLOPE OF 1:20.
19. CHAMFER ALL ENDS OF CURBS.

LEGEND

- DROP-IN INLET PROTECTION
- SILT FENCE
- LIMITS OF WORK
- SEEDING
- EROSION CONTROL BLANKET

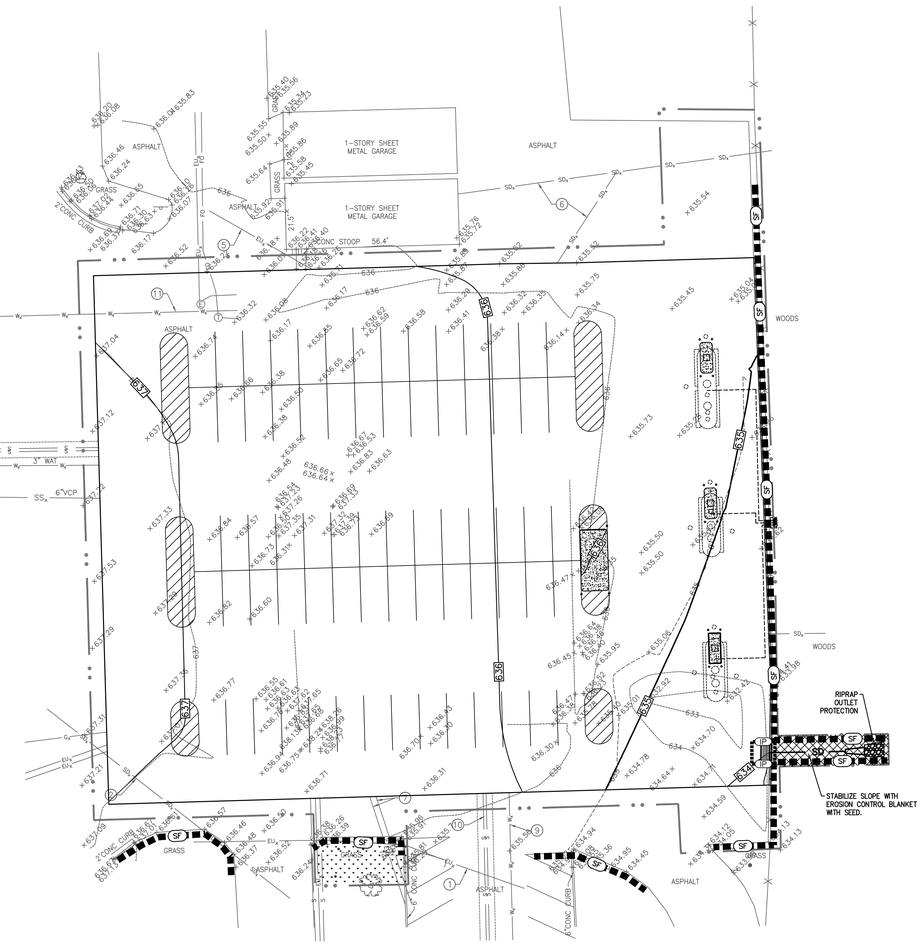

NOTE:
CONTRACTOR TO VERIFY LOCATION AND DEPTH OF EXISTING UTILITIES PRIOR TO COMMENCING ANY CONSTRUCTION. CONTACT ENGINEER IF VARIATION EXISTS.

CAUTION !!
THE LOCATIONS OF ALL EXISTING UNDERGROUND UTILITIES SHOWN ON THIS PLAN ARE BASED UPON ABOVE GROUND EVIDENCE (including, but not limited to, manholes, inlets, valves, and marks made upon the ground by others) AND ARE SPECULATIVE IN NATURE. THERE MAY ALSO BE OTHER EXISTING UNDERGROUND UTILITIES FOR WHICH THERE IS NO ABOVE GROUND EVIDENCE OR FOR WHICH NO ABOVE GROUND EVIDENCE WAS OBSERVED. THE EXACT LOCATIONS OF SAID EXISTING UNDERGROUND UTILITIES SHALL BE VERIFIED BY THE CONTRACTOR PRIOR TO ANY AND ALL CONSTRUCTION.

EROSION CONTROL PLAN

1" = 20'

0' 10' 20' 40'

100% CONSTRUCTION DOCUMENTS

Revisions: | Date

CONSULTANTS:
Applied Engineering Services
9100 Keystone Crossing, Suite 200
Indianapolis, IN 46240

ARCHITECT/ENGINEERS:
AMERICAN STRUCTUREPOINT INC.
7260 Shadeland Station | Indianapolis, Indiana 46256
TEL 317.547.5580 | FAX 317.543.0270
www.structurepoint.com

Drawing Title: EROSION CONTROL PLAN
Approved Project Director
Project Title: VA Medical Center, Illiana Healthcare System, Demolish Buildings 12, 26, 40, and 74
Location: Danville, Illinois
Date: 2014-12-12
Checked: RLN / SAC
Drawn: JLG
Project Number: 550-11-116
Building Number: 26
Drawing Number: 26-CE-101
Dwg. 14 of 36

Office of Construction and Facilities Management
VA U.S. Department of Veterans Affairs

VA FORM 08-6231

P:\2010\00629\D. Drawings\0004\Civil\Plan Set\14_550-11-116-26-CE-101.dwg 12-15-14 04:50:25 PM emiller

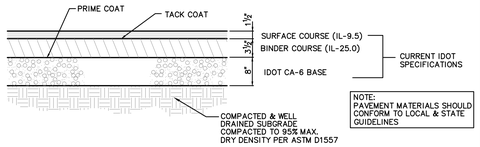

ASPHALT PAVEMENT SECTION

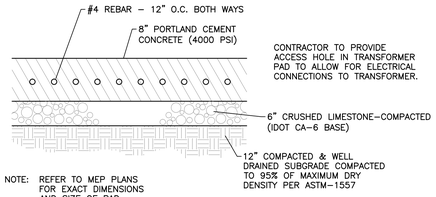

NOTE: REFER TO MEP PLANS FOR EXACT DIMENSIONS AND SIZE OF PAD.

CONCRETE PAD FOR TRANSFORMER

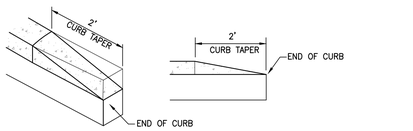

CURB TAPER

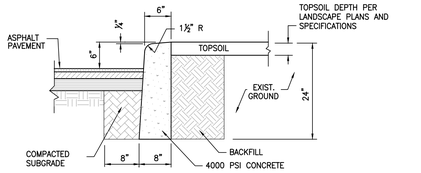

6" CONCRETE CURB

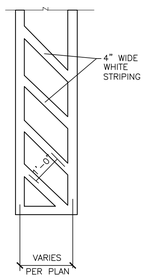

NO PARKING STRIPING DETAIL

NTS

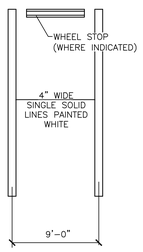

PARKING STALL STRIPING DETAIL

NTS

PARKING DETAILS

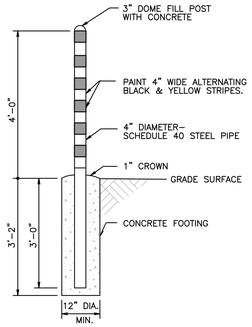

CONCRETE BOLLARD

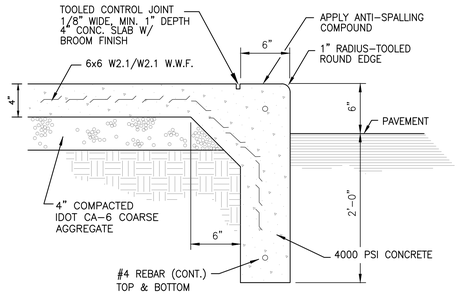

RAISED CONCRETE ISLAND

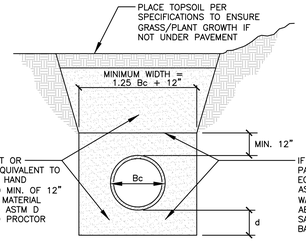

DEPTH OF BEDDING MATERIAL BELOW PIPE

D	d (MIN)
27" & SMALLER	4
30" TO 60"	4
66" & LARGER	4

NOTE:

ALL INITIAL BACKFILL SHALL BE INSTALLED IN 6" TO 12" BALANCED LIFTS.

A MINIMUM 9" OF CLEARANCE SHALL BE PROVIDED ON EACH SIDE OF THE INSTALLED PIPE.

LEGEND

Bc= OUTSIDE DIAMETER
D= INSIDE DIAMETER
d= DEPTH OF BEDDING MATERIAL BELOW PIPE

PLASTIC PIPE (PVC + HDPE) BEDDING DETAIL

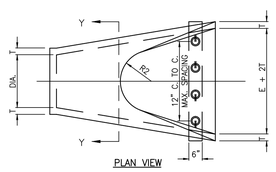

PLAN VIEW

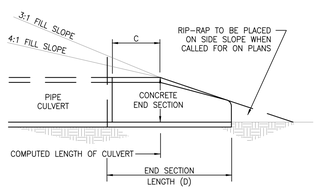

SLOPE DETAIL

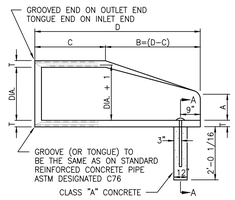

LONGITUDINAL SECTION

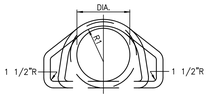

SECTION Y–Y

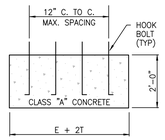

SECTION A–A
CONCRETE PIPE TOE ANCHOR

CONCRETE IN THESE END SECTIONS SHALL BE THE SAME GRADE AND STRENGTH AS SPECIFIED FOR REINFORCED CONCRETE PIPE, A.S.T.M. DESIGNATION C–76 (as set out in standard specifications.)

REINFORCEMENT IN THE "C" PORTION SHALL BE THE SAME AS SPECIFIED FOR REINFORCED CONCRETE, A.S.T.M. DESIGNATION C–76 FOR THE SIZE OF CONNECTING PIPE. (as set out in standard specifications.)

REINFORCEMENT IN THE "B" PORTION SHALL HAVE A CROSS SECTIONAL AREA EQUAL TO THAT OF ONE LAYER OF STEEL IN THE "C" PORTION.

THE END OF THE PIPE CULVERT SHALL BE PLACED IN THE CONCRETE END SECTION SO THAT THE FLOW LINES ARE FLUSH. THE JOINT SHALL BE COMPLETELY FILLED WITH MORTAR.

IN 3:1 OR 4:1 FILL SLOPE, CHANGE TO THE SLOPE OF THE END SECTION IN A SMOOTH, PLEASING TRANSITION APPROXIMATELY 10'–0" IN LENGTH.

VARIATIONS IN DIMENSIONS – THE THICKNESS OR THE CONCRETE, THE POSITION OF STEEL, AND THE INTERNAL DIAMETER OF THE PIPE SHALL CONFORM WITH THE VARIATIONS IN DIMENSIONS AS PROVIDED IN THE SPECIFICATIONS FOR REINFORCED CONCRETE CULVERT, STORM DRAIN, AND SEWER PIPE, A.S.T.M. DESIGNATION C–76.

CONCRETE PIPE TOE ANCHORS SHALL BE REQUIRED ON ALL CONCRETE PIPE END SECTIONS.

DIA.	T (MIN.)	A*	C*	D*	E*	K	R1	R2	APPROX. WEIGHT
12"	2"	5"	4'–3"	6'–2"	2'–0"	1.3	10 1/8"	9"	800
15"	2 1/4"	7"	4'–0"	6'–3"	2'–6"	1.5	12 1/2"	11"	1100
18"	2 1/2"	11"	4'–1"	6'–2"	3'–0"	1.8	15 1/2"	12"	1300
21"	2 3/4"	11"	3'–6"	6'–3"	3'–6"	2.1	16 1/8"	13"	1500
24"	3"	12"	2'–8"	6'–3"	4'–0"	2.3	16 3/16"	14"	1800
27"	3 1/4"	13"	2'–5"	6'–3"	4'–6"	2.6	18 3/16"	14 1/2"	2100
30"	3 1/2"	14"	1'–10"	6'–3"	5'–0"	2.9	18 1/2"	15"	2400
33"	3 3/4"	15"	3'–6"	8'–3"	5'–6"	3.1	23 3/4"	17 1/2"	4100
36"	4"	17"	3'–1"	8'–3"	6'–0"	3.4	24 3/16"	20"	4200
* TOLERANCE ∈1"									

CONCRETE END SECTION

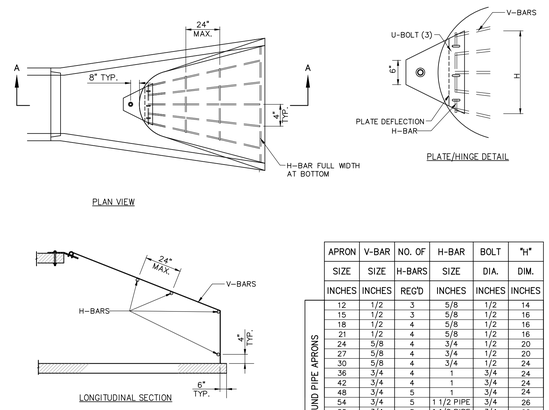

	APRON SIZE	V-BAR SIZE	NO. OF H-BARS REQ'D	H-BAR SIZE	BOLT DIA.	"H" DIM.
	INCHES	INCHES		INCHES	INCHES	INCHES
ROUND PIPE APRONS	12	1/2	3	5/8	1/2	14
	15	1/2	3	5/8	1/2	16
	18	1/2	4	5/8	1/2	16
	21	1/2	4	5/8	1/2	16
	24	5/8	4	3/4	1/2	20
	27	5/8	4	3/4	1/2	20
	30	5/8	4	3/4	1/2	24
	36	3/4	4	1	3/4	24
	42	3/4	4	1	3/4	24
	48	3/4	5	1	3/4	24
	54	3/4	5	1 1/2 PIPE	3/4	26
	60	3/4	5	1 1/2 PIPE	3/4	28
	66	3/4	6	1 1/2 PIPE	3/4	30
	72	3/4	6	1 1/2 PIPE	3/4	32

NOTES:

1. BARS & PLATES ARE HOT–ROLLED STEEL.
2. BARS, PLATES, & PIPE ARE FINISHED WITH 2 COATS OF ALUMINUM PAINT.
3. BOLTS ARE GALVANIZED
4. NO REBAR THROUGH PIPES WILL BE ALLOWED
5. DEBRIS GUARD SHALL BE PLACED ON ALL END SECTIONS.
6. ALL DEBRIS GUARDS SHALL BE HINGED FOR ACCESS.

DEBRIS GUARD FOR CONCRETE END SECTION

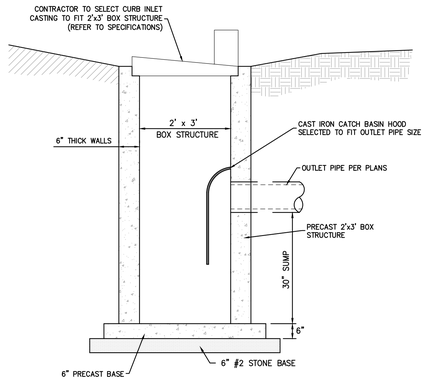

CURB INLET CATCH BASIN

100% CONSTRUCTION DOCUMENTS

Revisions:	Date

CONSULTANTS:

Applied Engineering Services
9100 Keystone Crossing, Suite 200
Indianapolis, IN 46240

ARCHITECT/ENGINEERS:

AMERICAN STRUCTUREPOINT INC.
7260 Shadeland Station | Indianapolis, Indiana 46256
TEL 317.547.5580 | FAX 317.543.0270
www.structurepoint.com

Drawing Title: SITE DETAILS

Approved: Project Director

Project Title: VA Medical Center, Illiana Healthcare System, Demolish Buildings 12, 26, 40, and 74

Location: Danville, Illinois

Date: 2014-12-12 | Checked: RLN / SAC | Drawn: JLG

Project Number: 550-11-116

Building Number: 26

Drawing Number: 26-CS-501

Dwg. 15 of 36

Office of Construction and Facilities Management

VA U.S. Department of Veterans Affairs

VA FORM 08-6231

P:\2010\00629\D. Drawings\0004\Civil\Plan Set\550-11-116-26-CS-501.dwg 15-Dec-14 4:50 PM jgustafson

GENERAL NOTES

1. ALL UTILITY INFORMATION SHALL BE VERIFIED BY THE CONTRACTOR PRIOR TO COMMENCING DEMOLITION & CONSTRUCTION.
2. MAINTAIN EXISTING UTILITIES TO REMAIN IN SERVICE AND PROTECT AGAINST DAMAGE DURING DEMOLITION AND CONSTRUCTION.
3. THE CONTRACTOR SHALL PROTECT AND NOT DESTROY THE SURVEY CONTROL POINTS DURING DEMOLITION AND CONSTRUCTION.
4. SOME INFORMATION HAS BEEN SHOWN PER AS-BUILT AND/OR RECORD DRAWINGS PROVIDED BY THE VETERANS AFFAIR. THIS INFORMATION HAS BEEN SCALE FROM THE DRAWINGS AND MAY NOT REPRESENT THE EXACT LOCATION IN THE FIELD. IT IS THE CONTRACTOR'S RESPONSIBILITY TO FIELD VERIFY EXISTING CONDITIONS PRIOR TO DEMOLITION ACTIVITIES. CONTRACTOR TO NOTIFY CONTRACTING OFFICER IMMEDIATELY AND A/E IF ANY DISCREPANCIES ARE FOUND.

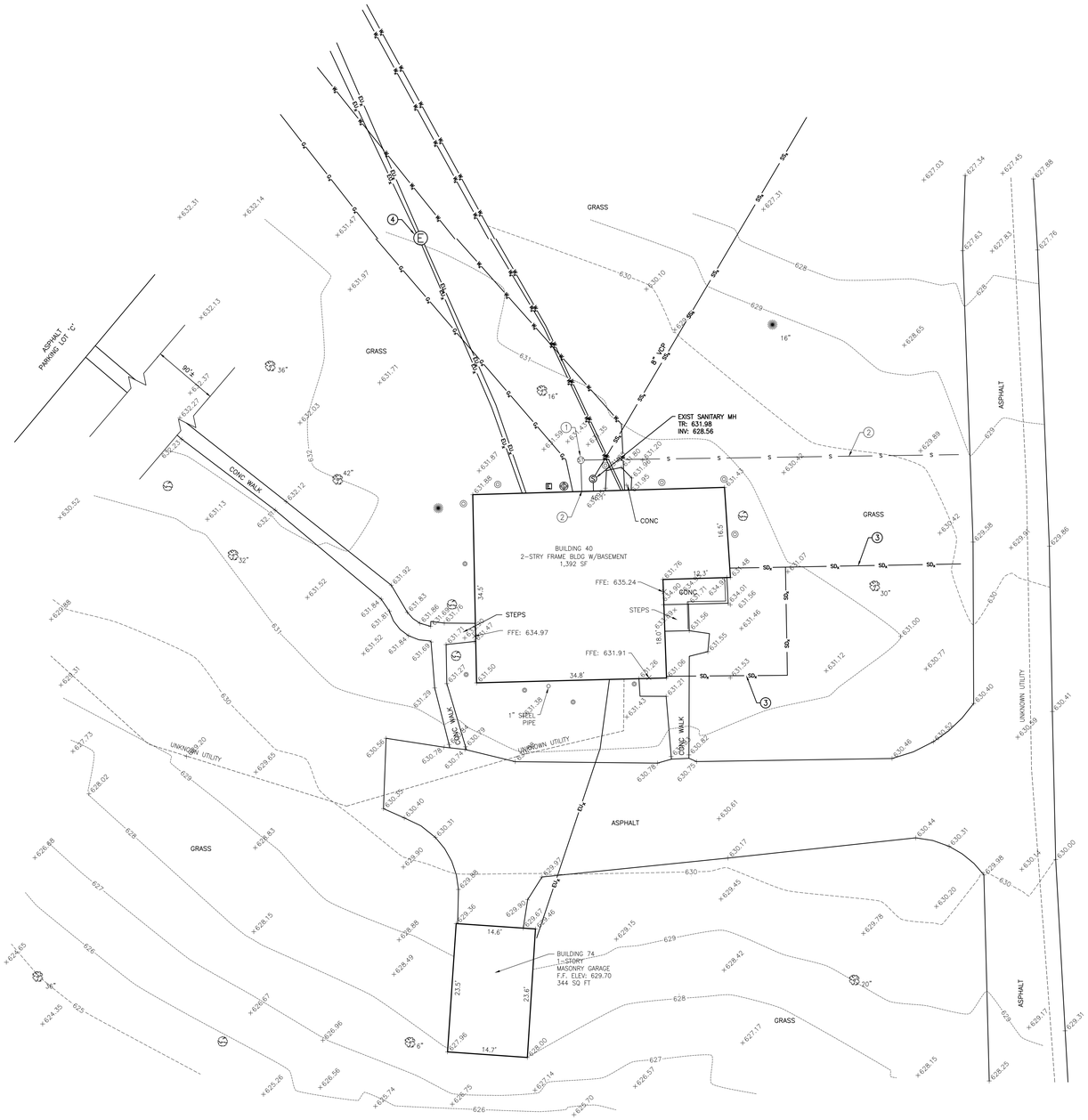

EXISTING TOPOGRAPHY

1" = 10'

0' 5' 10' 20'

LEGEND

STEAM MANHOLE	
CURB INLET	
DRAINAGE INLET	
CLEAN OUT	
COMBINATION MANHOLE	
SANITARY MANHOLE	
DRAINAGE MANHOLE	
LID	
GUARD POST	
SIGN	
ELECTRIC METER	
ELECTRIC MANHOLE	
LIGHT POLE	
TRANSFORMER	
GAS METER	
VALVE (GAS & WATER)	
TERMITE BAIT SYSTEM	
TELEPHONE MANHOLE	
TELEPHONE PEDESTAL	
TELEPHONE BOX	
FIRE VALVE SHUT OFF	
HOSE BIB	
WATER METER	
VENT	
BUSH	
CONIFEROUS TREE	
DECIDUOUS TREE	
EU_x	UNDERGROUND ELECTRIC LINE
FO	BURIED FIBER OPTIC LINE
G_x	UNDERGROUND GAS
S	UNDERGROUND STEAM LINE
T	UNDERGROUND COMMUNICATIONS
W_x	UNDERGROUND WATER LINE
SS_x	SANITARY SEWER
SD_x	STORM SEWER
TR	TOP OF RIM ELEVATION
INV	INVERT ELEVATION
VCP	VITRIFIED CLAY PIPE

1. POSSIBLE STEAM MANHOLE, PER CAD FILE PROVIDED BY THE VA. (NO VISUAL EVIDENCE FOUND)
2. POSSIBLE STEAM LINE, PER CAD FILE PROVIDED BY THE VA. (NO VISUAL EVIDENCE FOUND)
3. POSSIBLE STORM SEWER, PER CAD FILE PROVIDED BY THE VA. (NO VISUAL EVIDENCE FOUND)
4. POSSIBLE ELECTRIC MANHOLE, PER CAD FILE PROVIDED BY THE VA. (NO VISUAL EVIDENCE FOUND)

BENCHMARK INFORMATION (NAVD 1988)

BCA BENCHMARK 52
USNGS BM "C 300 1986"
TOP OF STEEL ROD IN UNITED STATES NATIONAL GEODETIC SURVEY VAULT WITH ACCESS CORNER STAMPED "C 300 1986" FOUND 22 FEET SOUTH OF THE SOUTH EDGE OF MAIN STREET AND 9 FEET EAST OF THE EAST EDGE OF THE EAST ACCESS DRIVE TO THE VETERANS ADMINISTRATION HOSPITAL, DANVILLE, VERMILION COUNTY, ILLINOIS.
ELEV- 640.71

BCA BENCHMARK 462
CHISELED SQUARE SET ON TOP OF THE NORTHEASTERLY SIDE OF A CONCRETE LIGHT POLE BASE, 225 FEET SOUTHEAST OF THE SOUTHEAST CORNER OF A TWO STORY BRICK BUILDING (VETERANS ADMINISTRATION BUILDING NUMBER 60) AND 16 FEET SOUTHWEST OF THE CENTERLINE OF VETERANS ADMINISTRATION ACCESS DRIVE, DANVILLE, VERMILION COUNTY, ILLINOIS.
ELEV - 632.65

CAUTION !!
THE LOCATIONS OF ALL EXISTING UNDERGROUND UTILITIES SHOWN ON THIS PLAN ARE BASED UPON ABOVE GROUND EVIDENCE (including, but not limited to, manholes, inlets, valves, and marks made upon the ground by others) AND ARE SPECULATIVE IN NATURE. THERE MAY ALSO BE OTHER EXISTING UNDERGROUND UTILITIES FOR WHICH THERE IS NO ABOVE GROUND EVIDENCE OR FOR WHICH NO ABOVE GROUND EVIDENCE WAS OBSERVED. THE EXACT LOCATIONS OF SAID EXISTING UNDERGROUND UTILITIES SHALL BE VERIFIED BY THE CONTRACTOR PRIOR TO ANY AND ALL CONSTRUCTION.

100% CONSTRUCTION DOCUMENTS

Revisions:	Date

CONSULTANTS:
Applied Engineering Services
9100 Keystone Crossing, Suite 200
Indianapolis, IN 46240

ARCHITECT/ENGINEERS:
AMERICAN STRUCTUREPOINT INC.
7260 Shadeland Station | Indianapolis, Indiana 46256
TEL 317.547.5580 | FAX 317.543.0270
www.structurepoint.com

Drawing Title: EXISTING TOPOGRAPHY
Approved: Project Director
Project Title: VA Medical Center, Illiana Healthcare System, Demolish Buildings 12, 26, 40, and 74
Location: Danville, Illinois
Date: 2014-12-12
Checked: RLN / SAC
Drawn: JLG
Project Number: 550-11-116
Building Number: 40
Drawing Number: 40-VF-101
Dwg. 16 of 36

Office of Construction and Facilities Management
VA U.S. Department of Veterans Affairs

VA FORM 08-6231

P:\2010\00629\D. Drawings\0004\Civil\Plan Set\16_550-11-116-40-VF-101.dwg 12-15-14 04:50:48 PM emiller

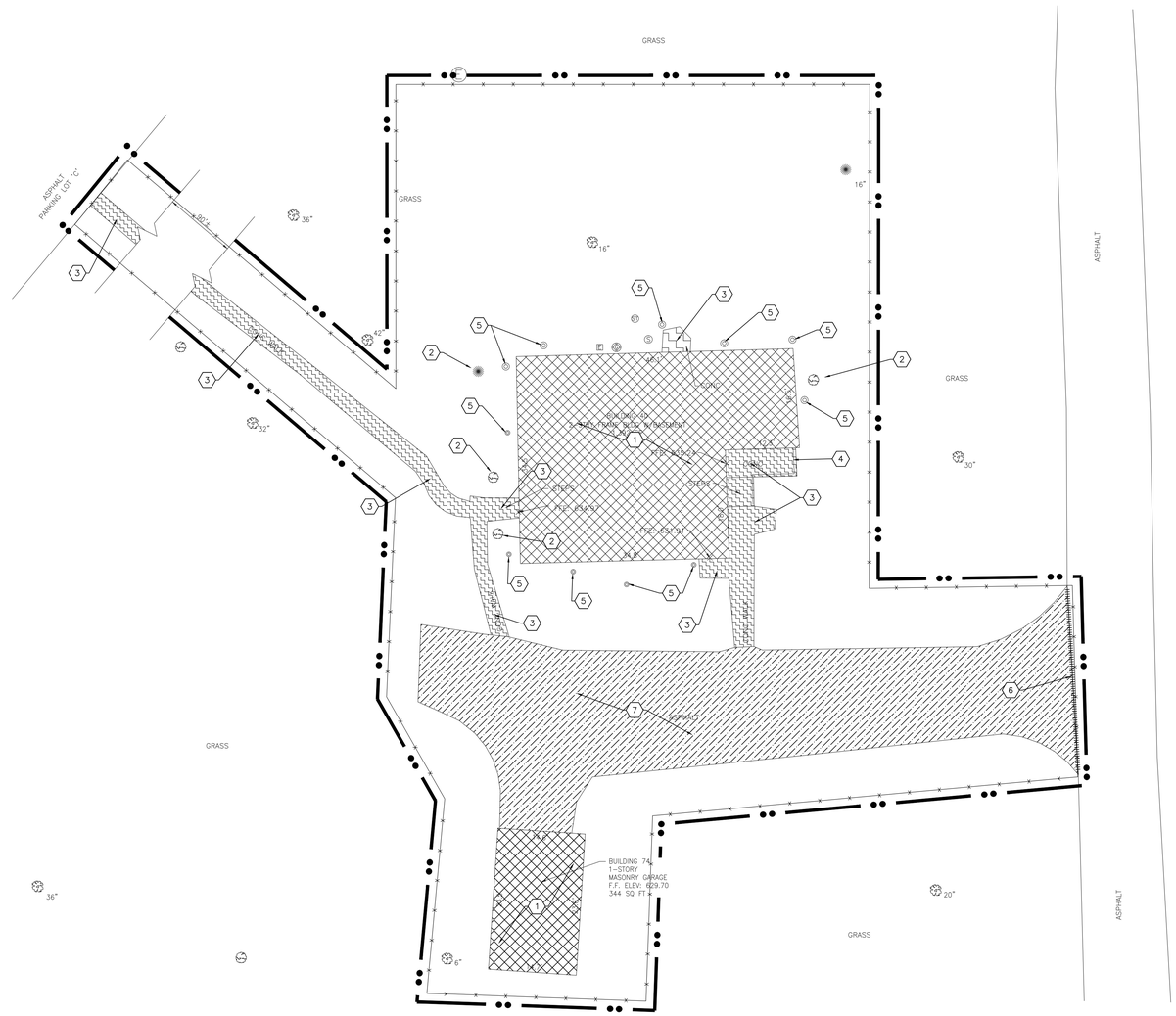

SITE DEMOLITION PLAN

1" = 10'

0' 5' 10' 20'

GENERAL NOTES

1. ALL WORK TO CONFORM TO FEDERAL, STATE AND LOCAL REGULATIONS.
2. CONTRACTOR SHALL KEEP ADJOINING PROPERTIES CLEAN OF CONSTRUCTION DEBRIS AND CONSTRUCTION TRAFFIC AT ALL TIMES.
3. CLEAR AND GRUB ALL TREES AND VEGETATION NECESSARY FOR CONSTRUCTION.
4. PROTECT TREES TO REMAIN DURING CONSTRUCTION. PROVIDE TREE PROTECTION FENCING AT THE TREE DRIP LINE.
5. STORAGE OF MATERIALS AND PARKING OF EQUIPMENT AND VEHICLES BELOW TREE CANOPIES WITHIN THE TREE DRIP LINE IS PROHIBITED.
6. THE CONTRACTOR SHALL REMOVE AND DISPOSE OF ALL EXISTING STRUCTURES, FENCES, CONCRETE, ASPHALT PAVEMENT AND OTHER MISCELLANEOUS APPURTENANCES ON SITE, UNLESS NOTED TO REMAIN ON THE CONTRACT DRAWINGS.
7. THE USE OF ANY TYPE OF EXPLOSIVES WILL NOT BE PERMITTED.
8. CONDUCT DEMOLITION AND CONSTRUCTION OPERATIONS TO ENSURE MINIMAL INTERFERENCE WITH STREETS, WALKS AND OTHER ADJACENT OCCUPIED FACILITIES.
9. DO NOT CLOSE OR OBSTRUCT STREETS, WALKS OR OTHER OCCUPIED FACILITIES WITHOUT PERMISSION FROM THE LOCAL AUTHORITIES HAVING JURISDICTION. PROVIDE ALTERNATE ROUTES AROUND CLOSED OR OBSTRUCTED TRAFFIC WAYS, IF REQUIRED BY GOVERNING AUTHORITIES.
10. ENSURE SAFE PASSAGE OF PERSONS AROUND AREAS OF DEMOLITION AND CONSTRUCTION. CONDUCT OPERATIONS TO PREVENT DAMAGE TO ADJACENT STRUCTURES AND OTHER FACILITIES AND INJURY TO PERSONS.
11. PROMPTLY REPAIR DAMAGE TO ADJACENT FACILITIES CAUSED BY DEMOLITION AND CONSTRUCTION OPERATIONS.
12. ALL UTILITY INFORMATION SHALL BE VERIFIED BY THE CONTRACTOR. CALL "JULIE", THE ILLINOIS ONE-CALL SYSTEM (811) FOR MARKING OF UNDERGROUND UTILITY LOCATIONS. NOTIFY AMERICAN STRUCTUREPOINT IF ANY VARIATION EXISTS.
13. MAINTAIN EXISTING UTILITIES TO REMAIN IN SERVICE AND PROTECT AGAINST DAMAGE DURING DEMOLITION AND CONSTRUCTION OPERATIONS. ANY UTILITY OUTAGE REQUIRES A MINIMUM 14 DAY NOTICE TO THE CONTRACTING OFFICER.
14. ALL UTILITIES TO BE REMOVED SHALL BE DISCONNECTED AND CAPPED AT THE NEAREST CONNECTION POINT. ANY UTILITIES UNDER ROADWAYS TO BE CAPPED, NOT REMOVED. UTILITIES SHALL BE CAPPED IN ACCORDANCE WITH THE GUIDELINES OF AUTHORITY HAVING JURISDICTION.
15. THE CONTRACTOR SHALL PROTECT AND NOT DESTROY THE BASE SURVEY CONTROL POINTS DURING DEMOLITION AND CONSTRUCTION.
16. CONTRACTOR SHALL SAVE AS MANY TREES AS POSSIBLE, AS INDICATED ON THE DRAWINGS.
17. DEMOLITION OF ELECTRIC LINES SHALL MEET UTILITY AGENCY REQUIREMENTS.

BASE BID

1. EXISTING BUILDING AND FOUNDATION TO BE REMOVED (BACKFILL BASEMENT WITH STRUCTURAL BACKFILL PER SPECIFICATIONS, REFER TO ARCHITECTURAL PLANS)
2. EXISTING TREE/SHRUB TO BE REMOVED
3. CONCRETE PADS, SIDEWALKS, AND OTHER MISCELLANEOUS SITE CONCRETE AND BASE TO BE REMOVED AS NOTED.
4. EXISTING HANDRAIL TO BE REMOVED
5. EXISTING TERMITE BAIT STATIONS TO BE REMOVED
6. SAWCUT TO FULL DEPTH OF ASPHALT PAVEMENT.
7. EXISTING ASPHALT PAVEMENT AND BASE TO BE REMOVED.

DEMOLITION LEGEND

- BUILDING TO BE REMOVED
- DEMOLITION OF ASPHALT
- DEMOLITION OF CONCRETE
- PAVEMENT SAWCUT
- 6' CHAIN LINK FENCE
- LIMITS OF WORK

EXISTING LEGEND

	STEAM MANHOLE		HOSE BIB
	CURB INLET		WATER METER
	DRAINAGE INLET		VENT
	CLEAN OUT		BUSH
	COMBINATION MANHOLE		CONIFEROUS TREE
	SANITARY MANHOLE		DECIDUOUS TREE
	DRAINAGE MANHOLE		
	LID		
	GUARD POST	EU_x	UNDERGROUND ELECTRIC LINE
	SIGN	FO	BURIED FIBER OPTIC LINE
	ELECTRIC METER	G_x	UNDERGROUND GAS
	ELECTRIC MANHOLE	S	UNDERGROUND STEAM LINE
	LIGHT POLE	T	UNDERGROUND COMMUNICATIONS
	TRANSFORMER	W_x	UNDERGROUND WATER LINE
	GAS METER	SS_x	SANITARY SEWER
	VALVE (GAS & WATER)	SD_x	STORM SEWER
	TERMITE BAIT SYSTEM	TR	TOP OF RIM ELEVATION
	TELEPHONE MANHOLE	INV	INVERT ELEVATION
	TELEPHONE PEDESTAL	VCP	VITRIFIED CLAY PIPE
	TELEPHONE BOX		
FVSO	FIRE VALVE SHUT OFF		

CAUTION !!
THE LOCATIONS OF ALL EXISTING UNDERGROUND UTILITIES SHOWN ON THIS PLAN ARE BASED UPON ABOVE GROUND EVIDENCE (including, but not limited to, manholes, inlets, valves, and marks made upon the ground by others) AND ARE SPECULATIVE IN NATURE. THERE MAY ALSO BE OTHER EXISTING UNDERGROUND UTILITIES FOR WHICH THERE IS NO ABOVE GROUND EVIDENCE OR FOR WHICH NO ABOVE GROUND EVIDENCE WAS OBSERVED. THE EXACT LOCATIONS OF SAID EXISTING UNDERGROUND UTILITIES SHALL BE VERIFIED BY THE CONTRACTOR PRIOR TO ANY AND ALL CONSTRUCTION.

NOTE:
CONTRACTOR TO VERIFY LOCATION AND DEPTH OF EXISTING UTILITIES PRIOR TO COMMENCING ANY CONSTRUCTION. CONTACT ENGINEER IF VARIATION EXISTS.

100% CONSTRUCTION DOCUMENTS

Revisions:	Date

CONSULTANTS:
Applied Engineering Services
9100 Keystone Crossing, Suite 200
Indianapolis, IN 46240

ARCHITECT/ENGINEERS:
AMERICAN STRUCTUREPOINT INC.
7260 Shadeland Station | Indianapolis, Indiana 46256
TEL 317.547.5580 | FAX 317.543.0270
www.structurepoint.com

Drawing Title: SITE DEMOLITION PLAN
Approved: Project Director
Project Title: VA Medical Center, Illiana Healthcare System, Demolish Buildings 12, 26, 40, and 74
Location: Danville, Illinois
Date: 2014-12-12
Checked: RLN / SAC
Drawn: JLG
Project Number: 550-11-116
Building Number: 40
Drawing Number: 40-CD-101
Dwg. 17 of 36

Office of Construction and Facilities Management
VA U.S. Department of Veterans Affairs

VA FORM 08-6231

P:\2010\00629\D. Drawings\0004\Civil\Plan Set\17_550-11-116-40-CD-101.dwg 12-15-14 04:50:58 PM emiller

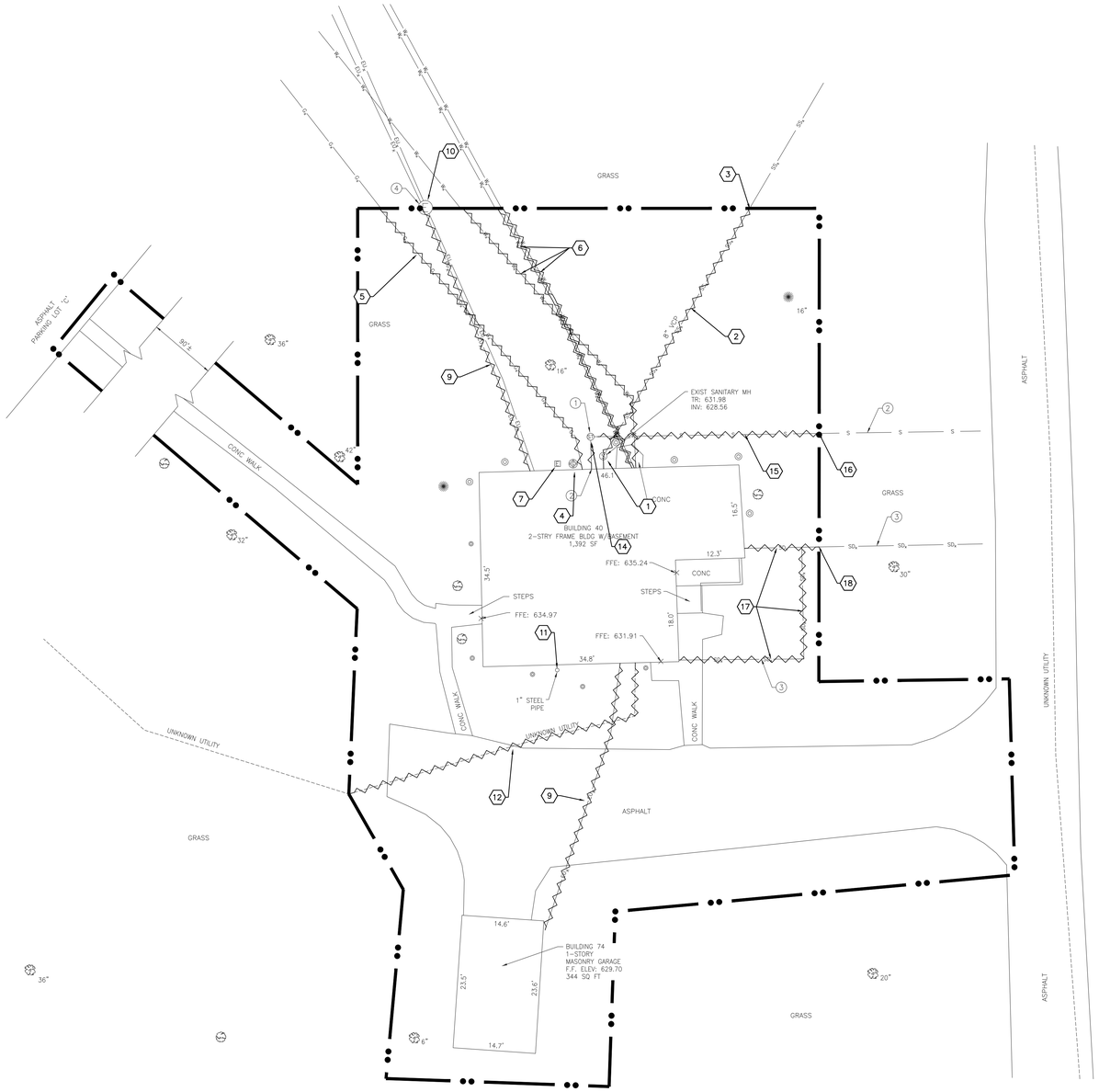

GENERAL NOTES

1. ALL WORK TO CONFORM TO FEDERAL, STATE AND LOCAL REGULATIONS.
2. CONTRACTOR SHALL KEEP ADJOINING PROPERTIES CLEAN OF CONSTRUCTION DEBRIS AND CONSTRUCTION TRAFFIC AT ALL TIMES.
3. CLEAR AND GRUB ALL TREES AND VEGETATION NECESSARY FOR CONSTRUCTION.
4. PROTECT TREES TO REMAIN DURING CONSTRUCTION. PROVIDE TREE PROTECTION FENCING AT THE TREE DRIP LINE.
5. STORAGE OF MATERIALS AND PARKING OF EQUIPMENT AND VEHICLES BELOW TREE CANOPIES WITHIN THE TREE DRIP LINE IS PROHIBITED.
6. THE CONTRACTOR SHALL REMOVE AND DISPOSE OF ALL EXISTING STRUCTURES, FENCES, CONCRETE, ASPHALT PAVEMENT AND OTHER MISCELLANEOUS APPURTENANCES ON SITE, UNLESS NOTED TO REMAIN ON THE CONTRACT DRAWINGS.
7. THE USE OF ANY TYPE OF EXPLOSIVES WILL NOT BE PERMITTED.
8. CONDUCT DEMOLITION AND CONSTRUCTION OPERATIONS TO ENSURE MINIMAL INTERFERENCE WITH STREETS, WALKS AND OTHER ADJACENT OCCUPIED FACILITIES.
9. DO NOT CLOSE OR OBSTRUCT STREETS, WALKS OR OTHER OCCUPIED FACILITIES WITHOUT PERMISSION FROM THE LOCAL AUTHORITIES HAVING JURISDICTION. PROVIDE ALTERNATE ROUTES AROUND CLOSED OR OBSTRUCTED TRAFFIC WAYS, IF REQUIRED BY GOVERNING AUTHORITIES.
10. ENSURE SAFE PASSAGE OF PERSONS AROUND AREAS OF DEMOLITION AND CONSTRUCTION. CONDUCT OPERATIONS TO PREVENT DAMAGE TO ADJACENT STRUCTURES AND OTHER FACILITIES AND INJURY TO PERSONS.
11. PROMPTLY REPAIR DAMAGE TO ADJACENT FACILITIES CAUSED BY DEMOLITION AND CONSTRUCTION OPERATIONS.
12. ALL UTILITY INFORMATION SHALL BE VERIFIED BY THE CONTRACTOR. CALL "JULIE", THE ILLINOIS ONE-CALL SYSTEM (811) FOR MARKING OF UNDERGROUND UTILITY LOCATIONS. NOTIFY AMERICAN STRUCTUREPOINT IF ANY VARIATION EXISTS.
13. MAINTAIN EXISTING UTILITIES TO REMAIN IN SERVICE AND PROTECT AGAINST DAMAGE DURING DEMOLITION AND CONSTRUCTION OPERATIONS. ANY UTILITY OUTAGE REQUIRES A MINIMUM 14 DAY NOTICE TO THE CONTRACTING OFFICER.
14. ALL UTILITIES TO BE REMOVED SHALL BE DISCONNECTED AND CAPPED AT THE NEAREST CONNECTION POINT. ANY UTILITIES UNDER ROADWAYS TO BE CAPPED, NOT REMOVED. UTILITIES SHALL BE CAPPED IN ACCORDANCE WITH THE GUIDELINES OF AUTHORITY HAVING JURISDICTION. COORDINATE REMOVAL AND DISCONNECTION OF UTILITIES WITH APPROPRIATE AUTHORITY.
15. THE CONTRACTOR SHALL PROTECT AND NOT DESTROY THE BASE SURVEY CONTROL POINTS DURING DEMOLITION AND CONSTRUCTION.
16. CONTRACTOR SHALL SAVE AS MANY TREES AS POSSIBLE, AS INDICATED ON THE DRAWINGS.
17. DEMOLITION OF ELECTRIC LINES SHALL MEET UTILITY AGENCY REQUIREMENTS.

BASE BID

1. EXISTING SANITARY SEWER STRUCTURE TO BE REMOVED.
2. EXISTING SANITARY SEWER TO BE REMOVED.
3. PLUG AND SEAL EXISTING SANITARY SEWER.
4. EXISTING GAS METER TO BE REMOVED.
5. EXISTING GAS LINE TO BE REMOVED.
6. EXISTING WATER LINE TO BE REMOVED. (EXISTING WATER LINES HAVE PREVIOUSLY BEEN SHUT OFF)
7. EXISTING ELECTRIC METER BOX TO BE REMOVED. (CONTRACTOR TO COORDINATE WITH AMEREN).
8. NOT USED.
9. EXISTING UNDERGROUND ELECTRIC TO BE REMOVED. CONTRACTOR TO VERIFY MANHOLE LOCATIONS AND DISCONNECT ELECTRIC SERVICE AT NEAREST MANHOLE.
10. EXISTING ELECTRIC MANHOLE TO REMAIN IN PLACE, CONTRACTOR TO FIELD VERIFY LOCATION.
11. EXISTING 1" STEEL PIPE TO BE REMOVED.
12. UNKNOWN UTILITY TO BE REMOVED.
13. NOT USED
14. EXISTING STEAM MANHOLE TO BE REMOVED.
15. EXISTING STEAM LINES AND TRENCH TO BE REMOVED.
16. CAP AND SEAL EXISTING STEAM LINE.
17. EXISTING STORM SEWER TO BE REMOVED.
18. CAP AND SEAL EXISTING STORM SEWER.

DEMOLITION LEGEND

- UTILITY TO BE REMOVED
- UTILITY TO BE ABANDONED IN PLACE
- LIMITS OF WORK

EXISTING LEGEND

- STEAM MANHOLE
- CURB INLET
- DRAINAGE INLET
- CLEAN OUT
- COMBINATION MANHOLE
- SANITARY MANHOLE
- DRAINAGE MANHOLE
- LID
- GUARD POST
- SIGN
- ELECTRIC METER
- ELECTRIC MANHOLE
- LIGHT POLE
- TRANSFORMER
- GAS METER
- VALVE (GAS & WATER)
- TERMITE BAIT SYSTEM
- TELEPHONE MANHOLE
- TELEPHONE PEDESTAL
- TELEPHONE BOX
- FIRE VALVE SHUT OFF
- HOSE BIB
- WATER METER
- VENT
- BUSH
- CONIFEROUS TREE
- DECIDUOUS TREE

EU	UNDERGROUND ELECTRIC LINE
FO	BURIED FIBER OPTIC LINE
G	UNDERGROUND GAS
S	UNDERGROUND STEAM LINE
T	UNDERGROUND COMMUNICATIONS
W	UNDERGROUND WATER LINE
SS	SANITARY SEWER
SD	STORM SEWER
TR	TOP OF RIM ELEVATION
INV	INVERT ELEVATION
VCP	VITRIFIED CLAY PIPE

1. POSSIBLE STEAM MANHOLE, PER CAD FILE PROVIDED BY THE VA. (NO VISUAL EVIDENCE FOUND)
2. POSSIBLE STEAM LINE, PER CAD FILE PROVIDED BY THE VA. (NO VISUAL EVIDENCE FOUND)
3. POSSIBLE STORM SEWER, PER CAD FILE PROVIDED BY THE VA. (NO VISUAL EVIDENCE FOUND)
4. POSSIBLE ELECTRIC MANHOLE, PER CAD FILE PROVIDED BY THE VA. (NO VISUAL EVIDENCE FOUND)

NOTE:
CONTRACTOR TO VERIFY LOCATION AND DEPTH OF EXISTING UTILITIES PRIOR TO COMMENCING ANY CONSTRUCTION. CONTACT ENGINEER IF VARIATION EXISTS.

CAUTION !!
THE LOCATIONS OF ALL EXISTING UNDERGROUND UTILITIES SHOWN ON THIS PLAN ARE BASED UPON ABOVE GROUND EVIDENCE (including, but not limited to, manholes, inlets, valves, and marks made upon the ground by others) AND ARE SPECULATIVE IN NATURE. THERE MAY ALSO BE OTHER EXISTING UNDERGROUND UTILITIES FOR WHICH THERE IS NO ABOVE GROUND EVIDENCE OR FOR WHICH NO ABOVE GROUND EVIDENCE WAS OBSERVED. THE EXACT LOCATIONS OF SAID EXISTING UNDERGROUND UTILITIES SHALL BE VERIFIED BY THE CONTRACTOR PRIOR TO ANY AND ALL CONSTRUCTION.

NOTE:
UTILITIES THAT ARE ABANDONED IN PLACE MUST BE PROPERLY CAPPED, GROUTED OR TERMINATED. PLASTIC PIPE AND CONDUIT MAY BE CAPPED. CONCRETE AND CLAY PIPES SHALL BE GROUTED SOLID. GROUTING SHALL EXTEND INTO PIPE A DISTANCE OF SUFFICIENT LENGTH TO RESIST FORCES ON THE GROUT

UTILITY DEMOLITION PLAN

1" = 10'

0' 5' 10' 20'

100% CONSTRUCTION DOCUMENTS

Revisions:	Date

CONSULTANTS:

Applied Engineering Services
9100 Keystone Crossing, Suite 200
Indianapolis, IN 46240

ARCHITECT/ENGINEERS:

AMERICAN STRUCTUREPOINT INC.
7260 Shadeland Station | Indianapolis, Indiana 46256
TEL 317.547.5580 | FAX 317.543.0270
www.structurepoint.com

Drawing Title: UTILITY DEMOLITION PLAN

Approved: Project Director

Project Title: VA Medical Center
Illiana Healthcare System
Demolish Buildings 12, 26, 40, and 74

Location: Danville, Illinois

Date: 2014-12-12 | Checked: RLN / SAC | Drawn: JLG

Project Number: 550-11-116

Building Number: 40

Drawing Number: 40-CD-102

Dwg. 18 of 36

Office of Construction and Facilities Management

VA U.S. Department of Veterans Affairs

VA FORM 08-6231

P:\2010\00629\D. Drawings\0004\Civil\Plan Set\18_550-11-116-40-CD-102.dwg 12-15-14 04:51:08 PM emiller

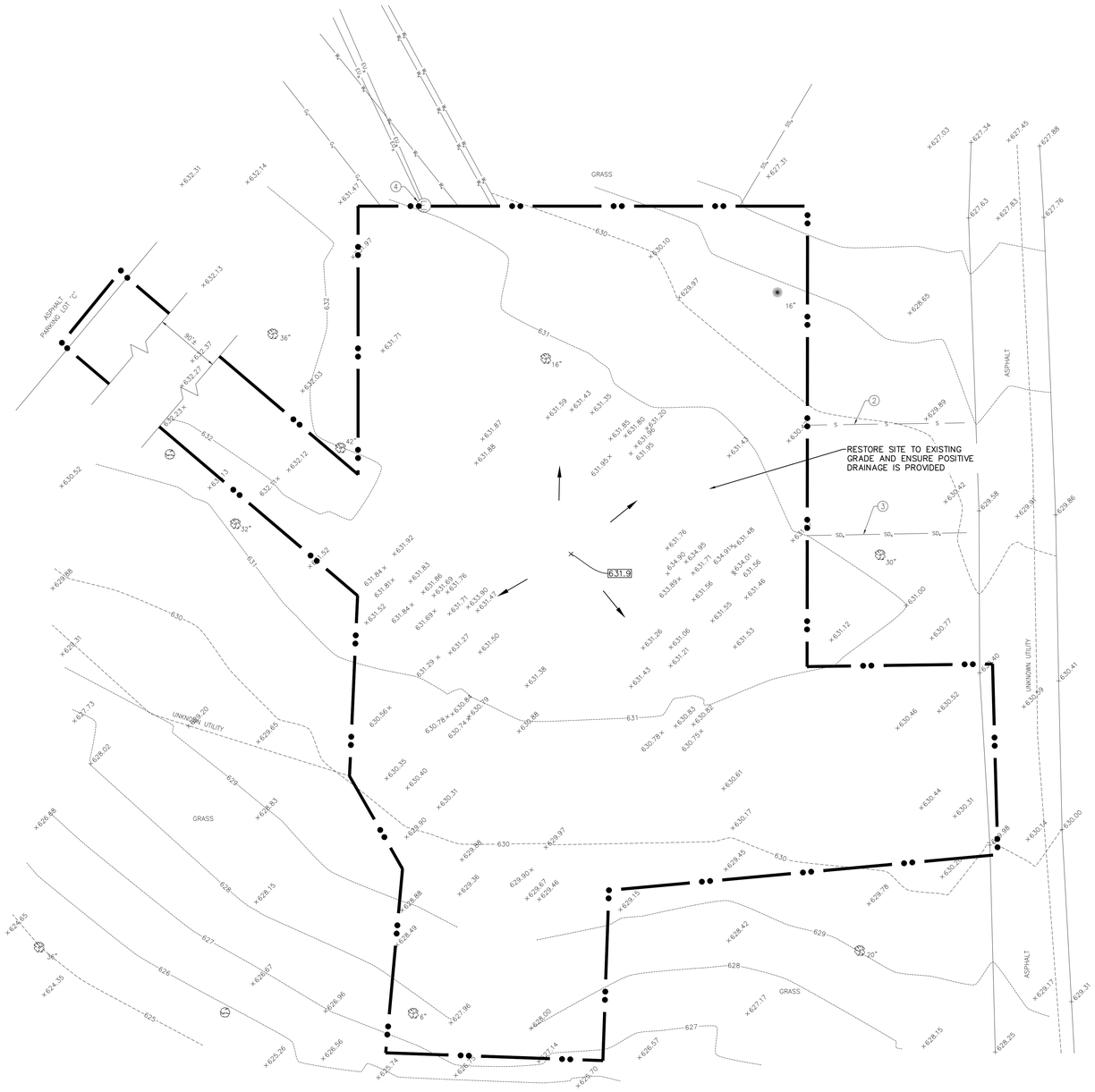

DEVELOPMENT PLAN

1" = 10'

0' 5' 10' 20'

GENERAL NOTES

1. ALL WORK TO CONFORM TO FEDERAL, STATE AND LOCAL REGULATIONS.
2. CONTRACTOR SHALL KEEP ADJOINING PROPERTIES CLEAN OF CONSTRUCTION DEBRIS AND CONSTRUCTION TRAFFIC AT ALL TIMES.
3. THE CONTRACTOR SHALL PROTECT AND NOT DESTROY THE BASE SURVEY CONTROL POINTS DURING DEMOLITION AND CONSTRUCTION.
4. PARKING STRIPES ARE TO BE 4" PAINTED (YELLOW).
5. ALL DIMENSIONS ARE TO THE EDGE OF PAVEMENT OR FACE OF CURB, UNLESS NOTED OTHERWISE.
6. ALL DIMENSIONS ARE TO FACE OF BRICK OR FACING MATERIAL, WHERE APPLICABLE.
7. ALL DIMENSIONS ARE PARALLEL WITH, OR PERPENDICULAR TO BASE LINES, PROPERTY LINES OR BUILDING LINES, UNLESS OTHERWISE NOTED.
8. SEE ARCHITECTURAL PLANS FOR ALL BUILDING DIMENSIONS.
9. THE CONTRACTOR SHALL VERIFY ALL DIMENSIONS IN THE FIELD PRIOR TO THE START OF CONSTRUCTION. THE CONTRACTOR SHALL BE RESPONSIBLE FOR ALL FIELD DIMENSIONS. IF ANY DISCREPANCIES ARE FOUND IN THESE PLANS FROM ACTUAL FIELD CONDITIONS, THE CONTRACTOR SHALL NOTIFY AMERICAN STRUCTUREPOINT IMMEDIATELY.
10. PROVIDE SMOOTH TRANSITIONS FROM NEW AREAS TO EXISTING FEATURES AS NECESSARY.
11. RESURFACE OR RECONSTRUCT AT LEAST TO ORIGINAL CONDITIONS ALL AREAS WHERE THE EXISTING PAVEMENT OR LAWNS ARE DAMAGED DURING CONSTRUCTION FROM TRAFFIC BY CONTRACTORS, SUBCONTRACTORS OR SUPPLIERS AFTER CONSTRUCTION WORK IS COMPLETE.
12. EXISTING PAVEMENT TO BE SAW CUT IN ALL AREAS WHERE INDICATED NEW PAVEMENT TO JOIN EXISTING.
13. THE EDGE OF THE EXISTING ASPHALT PAVEMENT SHALL BE PROPERLY SEALED WITH A TACK COAT MATERIAL IN ALL AREAS WHERE NEW ASPHALT PAVEMENT IS INDICATED TO JOIN EXISTING ASPHALT.
14. CONCRETE SAW CUTTING SHOULD NOT OCCUR UNTIL THE CONCRETE CAN BE SAWED WITHOUT UNACCEPTABLE RAVELING AND CAN SUPPORT WEIGHT. SAW CUTTING SHOULD BE PERFORMED AS SOON AS RAVELING STOPS BASED ON TRIAL CUTS. PROVIDE A NEAT CUT WHICH IS TRUE IN ALIGNMENT.
15. ALL JOINTS ARE TO CONTINUE THROUGH THE CURB.
16. RADIAL JOINTS SHALL BE NO SHORTER THAN 1.5'.
17. CONTRACTOR SHALL USE A THICKENED EXPANSION JOINT AROUND THE PERIMETER OF ANY BLOCK OUT IN THE CONCRETE PAVING.
18. ALL CONSTRUCTION JOINTS SHALL BE SAWN, CLEANED OF DEBRIS, BLOWN DRY AND SEALED WITH THE APPROPRIATE SEALANT ACCORDING TO MANUFACTURES DIRECTIONS.
19. ALL ASPHALT TO BE IN ACCORDANCE WITH INDIANA D.O.T. STANDARD SPECIFICATIONS RELATIVE TO MATERIAL, MIX, PLACEMENT AND WORKMANSHIP.
20. ALL SIDEWALKS SHALL COMPLY WITH ADA STANDARDS. MAXIMUM CROSS SLOPE OF ¼" PER FOOT AND MAXIMUM LONGITUDINAL SLOPE OF 1:20.
21. CHAMFER ALL ENDS OF CURBS.

LEGEND

—— ●● —— LIMITS OF WORK

BENCHMARK INFORMATION (NAVD 1988)

BCA BENCHMARK 52
USNGS BM "C 300 1986"
TOP OF STEEL ROD IN UNITED STATES NATIONAL GEODETIC SURVEY VAULT WITH ACCESS CORNER STAMPED "C 300 1986" FOUND 22 FEET SOUTH OF THE SOUTH EDGE OF MAIN STREET AND 9 FEET EAST OF THE EAST EDGE OF THE EAST ACCESS DRIVE TO THE VETERANS ADMINISTRATION HOSPITAL, DANVILLE, VERMILION COUNTY, ILLINOIS.
ELEV– 640.71

BCA BENCHMARK 462
CHISELED SQUARE SET ON TOP OF THE NORTHEASTERLY SIDE OF A CONCRETE LIGHT POLE BASE, 225 FEET SOUTHEAST OF THE SOUTHEAST CORNER OF A TWO STORY BRICK BUILDING (VETERANS ADMINISTRATION BUILDING NUMBER 60) AND 16 FEET SOUTHWEST OF THE CENTERLINE OF VETERANS ADMINISTRATION ACCESS DRIVE, DANVILLE, VERMILION COUNTY, ILLINOIS.
ELEV – 632.65

NOTE:
CONTRACTOR TO VERIFY LOCATION AND DEPTH OF EXISTING UTILITIES PRIOR TO COMMENCING ANY CONSTRUCTION. CONTACT ENGINEER IF VARIATION EXISTS.

CAUTION !!
THE LOCATIONS OF ALL EXISTING UNDERGROUND UTILITIES SHOWN ON THIS PLAN ARE BASED UPON ABOVE GROUND EVIDENCE (including, but not limited to, manholes, inlets, valves, and marks made upon the ground by others) AND ARE SPECULATIVE IN NATURE. THERE MAY ALSO BE OTHER EXISTING UNDERGROUND UTILITIES FOR WHICH THERE IS NO ABOVE GROUND EVIDENCE OR FOR WHICH NO ABOVE GROUND EVIDENCE WAS OBSERVED. THE EXACT LOCATIONS OF SAID EXISTING UNDERGROUND UTILITIES SHALL BE VERIFIED BY THE CONTRACTOR PRIOR TO ANY AND ALL CONSTRUCTION.

100% CONSTRUCTION DOCUMENTS

Revisions:	Date

CONSULTANTS:

Applied Engineering Services
9100 Keystone Crossing, Suite 200
Indianapolis, IN 46240

ARCHITECT/ENGINEERS:

AMERICAN STRUCTUREPOINT INC.
7260 Shadeland Station | Indianapolis, Indiana 46256
TEL 317.547.5580 | FAX 317.543.0270
www.structurepoint.com

Drawing Title: DEVELOPMENT PLAN

Approved: Project Director

Project Title: VA Medical Center
Illiana Healthcare System
Demolish Buildings 12, 26, 40, and 74

Location: Danville, Illinois

Date: 2014-12-12 | Checked: RLN / SAC | Drawn: JLG

Project Number: 550-11-116
Building Number: 40
Drawing Number: 40-CS-101
Dwg. 19 of 36

Office of Construction and Facilities Management

VA U.S. Department of Veterans Affairs

VA FORM 08-6231

P:\2010\00629\D. Drawings\0004\Civil\Plan Set\19_550-11-116-40-CS-101.dwg 12-15-14 04:51:20 PM emiller

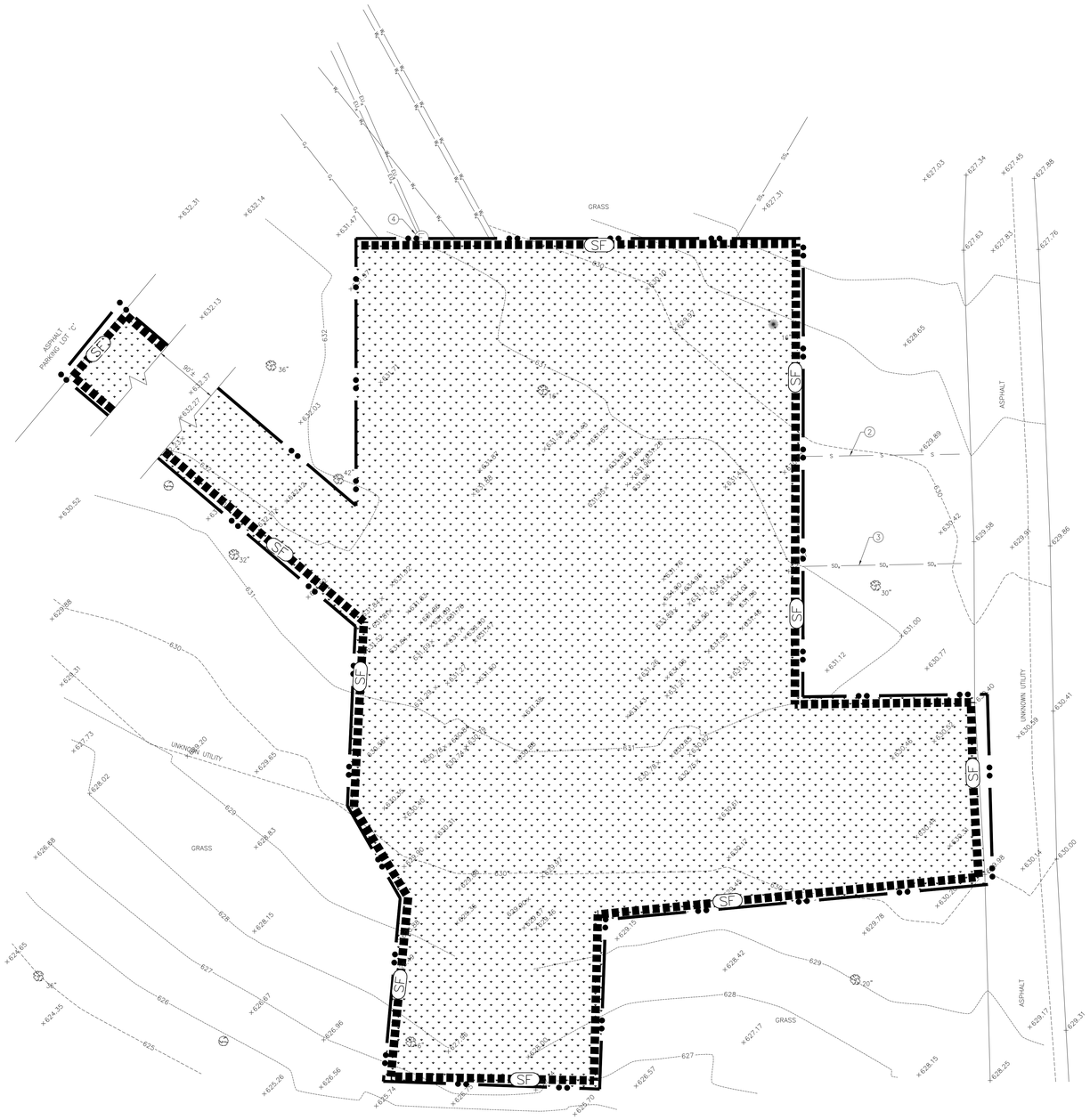

EROSION CONTROL PLAN

1" = 10'

0' 5' 10' 20'

GENERAL NOTES

1. ALL WORK TO CONFORM TO FEDERAL, STATE AND LOCAL REGULATIONS.
2. CONTRACTOR SHALL KEEP ADJOINING PROPERTIES CLEAN OF CONSTRUCTION DEBRIS AND CONSTRUCTION TRAFFIC AT ALL TIMES.
3. THE CONTRACTOR SHALL PROTECT AND NOT DESTROY THE BASE SURVEY CONTROL POINTS DURING DEMOLITION AND CONSTRUCTION.
4. ALL DIMENSIONS ARE TO THE EDGE OF PAVEMENT OR FACE OF CURB, UNLESS NOTED OTHERWISE.
5. ALL DIMENSIONS ARE TO FACE OF BRICK OR FACING MATERIAL, WHERE APPLICABLE.
6. ALL DIMENSIONS ARE PARALLEL WITH, OR PERPENDICULAR TO BASE LINES, PROPERTY LINES OR BUILDING LINES, UNLESS OTHERWISE NOTED.
7. THE CONTRACTOR SHALL VERIFY ALL DIMENSIONS IN THE FIELD PRIOR TO THE START OF CONSTRUCTION. THE CONTRACTOR SHALL BE RESPONSIBLE FOR ALL FIELD DIMENSIONS. IF ANY DISCREPANCIES ARE FOUND IN THESE PLANS FROM ACTUAL FIELD CONDITIONS, THE CONTRACTOR SHALL NOTIFY AMERICAN STRUCTUREPOINT IMMEDIATELY.
8. PROVIDE SMOOTH TRANSITIONS FROM NEW AREAS TO EXISTING FEATURES AS NECESSARY.
9. RESURFACE OR RECONSTRUCT AT LEAST TO ORIGINAL CONDITIONS ALL AREAS WHERE THE EXISTING PAVEMENT OR LAWNS ARE DAMAGED DURING CONSTRUCTION FROM TRAFFIC BY CONTRACTORS, SUBCONTRACTORS OR SUPPLIERS AFTER CONSTRUCTION WORK IS COMPLETE.
10. EXISTING PAVEMENT TO BE SAW CUT IN ALL AREAS WHERE INDICATED NEW PAVEMENT TO JOIN EXISTING.
11. THE EDGE OF THE EXISTING ASPHALT PAVEMENT SHALL BE PROPERLY SEALED WITH A TACK COAT MATERIAL IN ALL AREAS WHERE NEW ASPHALT PAVEMENT IS INDICATED TO JOIN EXISTING ASPHALT.
12. CONCRETE SAW CUTTING SHOULD NOT OCCUR UNTIL THE CONCRETE CAN BE SAWED WITHOUT UNACCEPTABLE RAVELING AND CAN SUPPORT WEIGHT. SAW CUTTING SHOULD BE PERFORMED AS SOON AS RAVELING STOPS BASED ON TRIAL CUTS. PROVIDE A NEAT CUT WHICH IS TRUE IN ALIGNMENT.
13. ALL JOINTS ARE TO CONTINUE THROUGH THE CURB.
14. RADIAL JOINTS SHALL BE NO SHORTER THAN 1.5'.
15. CONTRACTOR SHALL USE A THICKENED EXPANSION JOINT AROUND THE PERIMETER OF ANY BLOCK OUT IN THE CONCRETE PAVING.
16. ALL CONSTRUCTION JOINTS SHALL BE SAWN, CLEANED OF DEBRIS, BLOWN DRY AND SEALED WITH THE APPROPRIATE SEALANT ACCORDING TO MANUFACTURES DIRECTIONS.
17. ALL ASPHALT TO BE IN ACCORDANCE WITH INDIANA D.O.T. STANDARD SPECIFICATIONS RELATIVE TO MATERIAL, MIX, PLACEMENT AND WORKMANSHIP.
18. ALL SIDEWALKS SHALL COMPLY WITH ADA STANDARDS. MAXIMUM CROSS SLOPE OF ¼" PER FOOT AND MAXIMUM LONGITUDINAL SLOPE OF 1:20.
19. CHAMFER ALL ENDS OF CURBS.

LEGEND

SILT FENCE

SEEDING

LIMITS OF WORK

NOTE:
CONTRACTOR TO VERIFY LOCATION AND DEPTH OF EXISTING UTILITIES PRIOR TO COMMENCING ANY CONSTRUCTION. CONTACT ENGINEER IF VARIATION EXISTS.

CAUTION !!!
THE LOCATIONS OF ALL EXISTING UNDERGROUND UTILITIES SHOWN ON THIS PLAN ARE BASED UPON ABOVE GROUND EVIDENCE (including, but not limited to, manholes, inlets, valves, and marks made upon the ground by others) AND ARE SPECULATIVE IN NATURE. THERE MAY ALSO BE OTHER EXISTING UNDERGROUND UTILITIES FOR WHICH THERE IS NO ABOVE GROUND EVIDENCE OR FOR WHICH NO ABOVE GROUND EVIDENCE WAS OBSERVED. THE EXACT LOCATIONS OF SAID EXISTING UNDERGROUND UTILITIES SHALL BE VERIFIED BY THE CONTRACTOR PRIOR TO ANY AND ALL CONSTRUCTION.

100% CONSTRUCTION DOCUMENTS

Revisions	Date

CONSULTANTS:

Applied Engineering Services
9100 Keystone Crossing, Suite 200
Indianapolis, IN 46240

ARCHITECT/ENGINEERS:

AMERICAN STRUCTUREPOINT INC.
7260 Shadeland Station | Indianapolis, Indiana 46256
TEL 317.547.5580 | FAX 317.543.0270
www.structurepoint.com

Drawing Title: EROSION CONTROL PLAN

Approved Project Director:

Project Title: VA Medical Center, Illiana Healthcare System, Demolish Buildings 12, 26, 40, and 74

Location: Danville, Illinois

Date: 2014-12-12 | Checked: RLN / SAC | Drawn: JLG

Project Number: 550-11-116

Building Number: 40

Drawing Number: 40-CE-101

Dwg. 20 of 36

Office of Construction and Facilities Management

VA U.S. Department of Veterans Affairs

VA FORM 08-6231

P:\2010\00629\D. Drawings\0004\Civil\Plan Set\20_550-11-116-40-CE-101.dwg 12-15-14 04:51:34 PM emiller

SEASONAL SOIL PROTECTION CHART

STABILIZATION PRACTICE	JAN.	FEB.	MAR.	APR.	MAY	JUNE	JULY	AUG.	SEPT.	OCT.	NOV.	DEC.
PERMANENT SEEDING		A			*	///////	///////	*	/\/*			
DORMANT SEEDING	B									B		
TEMPORARY SEEDING		C	E		*	///////	///////	D *				

A = KENTUCKY BLUEGRASS 100 LBS./ACRE; CREEPING RED FESCUE 100 LBS./ACRE; HYDROSEEDED
B = KENTUCKY BLUEGRASS 120 LBS./ACRE; CREEPING RED FESCUE 120 LBS./ACRE; HYDROSEEDED
C = SPRING OATS 3 BUSHELS/ACRE
D = WHEAT OR RYE 2 BUSHELS/ACRE
E = ANNUAL RYE GRASS 40 LBS./ACRE (1 LB/1000 SQ. FT.)
/\/ = IRRIGATION NEEDED DURING JUNE, JULY, AUGUST AND/OR SEPTEMBER

SEASONAL SOIL PROTECTION

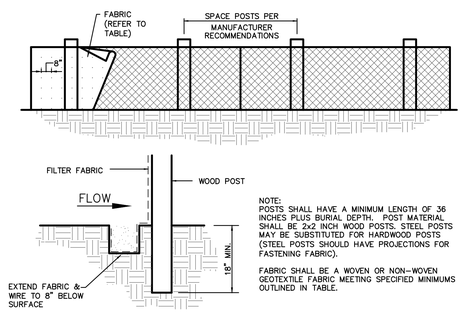

NOTE:
POSTS SHALL HAVE A MINIMUM LENGTH OF 36 INCHES PLUS BURIAL DEPTH. POST MATERIAL SHALL BE 2x2 INCH WOOD POSTS. STEEL POSTS MAY BE SUBSTITUTED FOR HARDWOOD POSTS (STEEL POSTS SHOULD HAVE PROJECTIONS FOR FASTENING FABRIC).

FABRIC SHALL BE A WOVEN OR NON-WOVEN GEOTEXTILE FABRIC MEETING SPECIFIED MINIMUMS OUTLINED IN TABLE.

SILT FENCE INSTALLATION REQUIREMENTS

SITE PREPARATION

1. PLAN FOR THE FENCE TO BE AT LEAST 10 ft. FROM THE TOE OF THE SLOPE TO PROVIDE A SEDIMENT STORAGE AREA.
2. PROVIDE ACCESS TO THE AREA IF SEDIMENT CLEANOUT WILL BE NEEDED.

FENCE CONSTRUCTION

1. LAY OUT THE LOCATION OF THE FENCE SO THAT IT IS PARALLEL TO THE CONTOUR OF THE SLOPE AND AT LEAST 10 FEET BEYOND THE TOE OF THE SLOPE TO PROVIDE A SEDIMENT STORAGE AREA. TURN THE ENDS OF THE FENCE UP SLOPE SUCH THAT THE POINT OF CONTACT BETWEEN THE GROUND AND THE BOTTOM OF THE FENCE END TERMINATES AT A HIGHER ELEVATION THAN THE TOP OF THE FENCE AT ITS LOWEST POINT.
2. EXCAVATE AN EIGHT-INCH DEEP BY FOUR-INCH WIDE TRENCH ALONG THE ENTIRE LENGTH OF THE FENCE LINE. INSTALLATION BY PLOWING IS ALSO ACCEPTABLE.
3. INSTALL THE SILT FENCE WITH THE FILTER FABRIC LOCATED ON THE UP-SLOPE SIDE OF THE EXCAVATED TRENCH AND THE SUPPORT POSTS ON THE DOWN-SLOPE SIDE OF THE TRENCH.
4. DRIVE THE SUPPORT POSTS AT LEAST 18 INCHES INTO THE GROUND, TIGHTLY STRETCHING THE FABRIC BETWEEN THE POSTS AS EACH IS DRIVEN INTO THE SOIL. A MINIMUM OF 12 INCHES OF THE FILTER FABRIC SHOULD EXTEND INTO THE TRENCH. (IF IT IS NECESSARY TO JOIN THE ENDS OF TWO FENCES, USE THE WRAP JOINT METHOD.)
5. LAY THE LOWER FOUR INCHES OF FILTER FABRIC ON THE BOTTOM OF THE TRENCH AND EXTEND IT TOWARD THE UP-SLOPE SIDE OF THE TRENCH.
6. BACKFILL THE TRENCH WITH SOIL MATERIAL AND COMPACT IT IN PLACE.

SILT FENCE MAINTENANCE REQUIREMENTS

1. INSPECT WITHIN 24 HOURS OF A RAIN EVENT AND AT LEAST ONCE EVERY SEVEN CALENDAR DAYS.
2. IF FENCE FABRIC TEARS, STARTS TO DECOMPOSE, OR IN ANY WAY BECOMES INEFFECTIVE, REPLACE THE AFFECTED PORTION IMMEDIATELY.
3. REMOVE DEPOSITED SEDIMENT WHEN IT IS CAUSING THE FILTER FABRIC TO BULGE OR WHEN IT REACHES ONE-HALF THE HEIGHT OF THE FENCE AT ITS LOWEST POINT. WHEN CONTRIBUTING DRAINAGE AREA HAS BEEN STABILIZED, REMOVE THE FENCE AND SEDIMENT DEPOSITS, GRADE THE SITE TO BLEND WITH THE SURROUNDING AREA, AND STABILIZE.

PHYSICAL PROPERTY	WOVEN GEOTEXTILE FABRIC	NON-WOVEN GEOTEXTILE FABRIC
FILTERING EFFICIENCY	85%	85%
TEXTILE STRENGTH AT 20% ELONGATION STANDARD STRENGTH EXTRA STRENGTH	 30 LBS. PER LINEAL INCH 50 LBS. PER LINEAL INCH	 50 LBS. PER LINEAL INCH 70 LBS. PER LINEAL INCH
SLURRY FLOW RATE	0.3 GAL./MIN./SQUARE FOOT	4.5 GAL./MIN./SQUARE FOOT
WATER FLOW RATE	15 GAL./MIN./SQUARE FOOT	220 GAL./MIN./SQUARE FOOT
UV RESISTANCE	70%	85%
POST SPACING	7 FEET	5 FEET

SILT FENCE INSTALLATION

100% CONSTRUCTION DOCUMENTS

Revisions: | Date

CONSULTANTS:

Applied Engineering Services
9100 Keystone Crossing, Suite 200
Indianapolis, IN 46240

ARCHITECT/ENGINEERS:

AMERICAN STRUCTUREPOINT INC.
7260 Shadeland Station | Indianapolis, Indiana 46256
TEL 317.547.5580 | FAX 317.543.0270
www.structurepoint.com

Drawing Title: SITE DETAILS
Approved: Project Director
Project Title: VA Medical Center, Illiana Healthcare System, Demolish Buildings 12, 26, 40, and 74
Location: Danville, Illinois
Date: 2014-12-12
Checked: RLN / SAC
Drawn: JLG
Project Number: 550-11-116
Building Number: 40
Drawing Number: 40-CS-501
Dwg. 21 of 36

Office of Construction and Facilities Management
VA U.S. Department of Veterans Affairs

VA FORM 08-6231

P:\2010\00629\D. Drawings\0004\Civil\Plan Set\21_550-11-116-40-CS-501.dwg 15-Dec-14 4:47 PM jgustafson

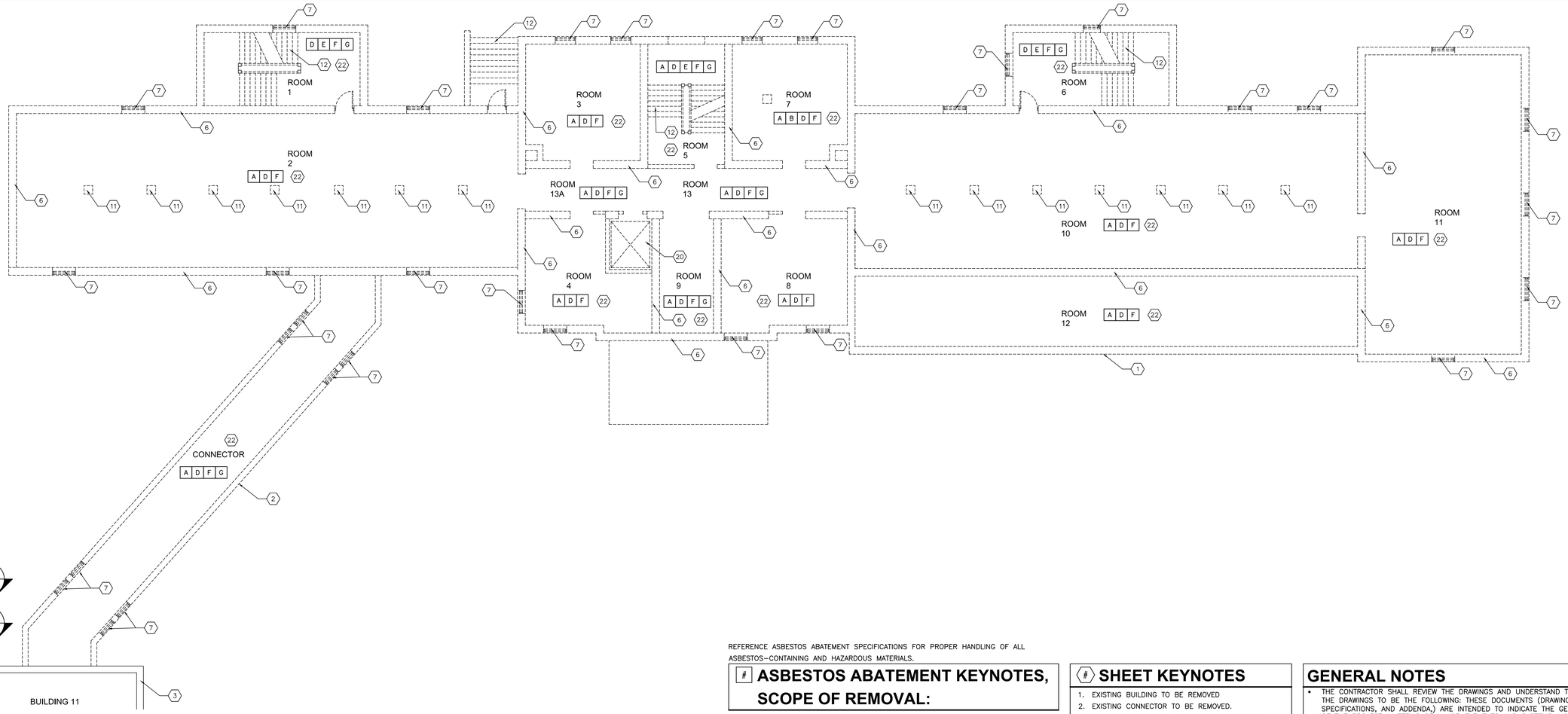

BASEMENT FLOOR PLAN 1 AD-101
SCALE: 1/8" = 1'-0"

N

REFERENCE ASBESTOS ABATEMENT SPECIFICATIONS FOR PROPER HANDLING OF ALL ASBESTOS–CONTAINING AND HAZARDOUS MATERIALS.

ASBESTOS ABATEMENT KEYNOTES, SCOPE OF REMOVAL:

A. PIPE INSULATION
B. TANK OR VESSEL INSULATION
C. FLOOR TILE/MASTIC/TAR PAPER
D. WINDOW GLAZING & CAULKING
E. FIRE DOORS
F. FLUORESCENT TUBES AND BALLASTS
G. EXIT/EMERGENCY LIGHT BATTERIES

SHEET KEYNOTES

1. EXISTING BUILDING TO BE REMOVED
2. EXISTING CONNECTOR TO BE REMOVED.
3. PROTECT EXISTING BUILDING DURING DEMOLITION.
4. EXISTING RAILING SYSTEM TO BE REMOVED.
5. EXISTING RAMP SYSTEM TO BE REMOVED.
6. EXISTING WALL SYSTEM TO BE REMOVED.
7. EXISTING WINDOW SYSTEM TO BE REMOVED.
8. EXISTING DORMER SYSTEM TO BE REMOVED.
9. EXISTING ROOF SYSTEM TO BE REMOVED.
10. EXISTING ROOF DRAINAGE SYSTEM TO BE REMOVED.
11. EXISTING STRUCTURAL SYSTEM TO BE REMOVED.
12. EXISTING STAIR SYSTEM TO BE REMOVED.
13. EXISTING FOUNDATION SYSTEM TO BE REMOVED.
14. EXISTING MECHANICAL SYSTEM TO BE REMOVED.
15. EXISTING ELECTRICAL SYSTEM TO BE REMOVED.
16. EXISTING DOOR SYSTEM TO BE REMOVED.
17. EXISTING WINDOW SCREEN SYSTEM TO BE REMOVED.
18. EXISTING PLUMBING SYSTEM TO BE REMOVED.
19. EXISTING AWNING SYSTEM TO BE REMOVED.
20. EXISTING ELEVATOR SYSTEM TO BE REMOVED.
21. EXISTING CONCRETE SLAB TO BE REMOVED.
22. FIXTURES AND FITTINGS TO BE REMOVED.

GENERAL NOTES

- THE CONTRACTOR SHALL REVIEW THE DRAWINGS AND UNDERSTAND THE SCOPE OF THE DRAWINGS TO BE THE FOLLOWING: THESE DOCUMENTS (DRAWINGS, SPECIFICATIONS, AND ADDENDA,) ARE INTENDED TO INDICATE THE GENERAL SCOPE OF THE PROJECT IN TERMS OF MAJOR ELEMENTS AND SYSTEMS INCLUDING ARCHITECTURAL, STRUCTURAL, MECHANICAL, AND ELECTRICAL. THE DOCUMENTS DO NOT AND ARE NOT INTENDED TO INDICATE OR DESCRIBE IN DETAIL ALL THE NECESSARY WORK REQUIRED FOR FULL PERFORMANCE OF, AND COMPLETION OF THE REQUIREMENTS OF THE CONTRACT. ON THE BASIS OF THE GENERAL SCOPE AND DESIGN INTENT INDICATED IN THESE DOCUMENTS, THE CONTRACTOR SHALL FURNISH ALL ITEMS REQUIRED FOR THE PROPER EXECUTION AND COMPLETION OF THE WORK.
- FIELD VERIFY LOCATION OF CONSTRUCTION ELEMENTS, DOCUMENTS ARE REPRESENTATIVE TO CONVEY DESIGN INTENT AND ARE NOT AS–BUILT DRAWINGS.
- THE CONTRACTORS INVOLVED IN THIS PROJECT SHALL BE RESPONSIBLE FOR DESIGNING, INSTALLING, OR REMOVING THEIR RESPECTIVE WORK AND SYSTEMS TO MEET ALL APPLICABLE FEDERAL, STATE, AND LOCAL CODES, LAWS, SAFETY REGULATIONS, AND HAZARDOUS WASTE LAWS. THE CONTRACTOR SHALL FURNISH ALL NECESSARY PERMITS.
- COORDINATE WORK OF ALL TRADES PRIOR TO STARTING DEMOLITION OR CONSTRUCTION.
- UTILITY, ELECTRICAL, AND DATA SERVICE TO ADJACENT BUILDINGS TO REMAIN IN SERVICE. PROTECT AGAINST DAMAGE DURING DEMOLITION OR CONSTRUCTION WORK. PROMPTLY REPAIR DAMAGE TO SERVICES TO ADJACENT BUILDINGS CAUSED BY DEMOLITION AND CONSTRUCTION OPERATIONS.
- CAREFULLY CUT AND REMOVE PORTIONS OF WORK INDICATED TO BE DEMOLISHED SO AS NOT TO DISTURB ADJACENT AREAS OF CONSTRUCTION TO REMAIN. RESTORE AND REPAIR ANY AREAS DAMAGED IN THE COURSE OF DEMOLITION AND CONSTRUCTION.
- THE CONTRACTOR SHALL FURNISH PROTECTION TO PREVENT DAMAGE TO ANY EXISTING CONSTRUCTION, EQUIPMENT, AND MACHINERY.
- ALL WORK SHALL BE PERFORMED IN A SKILLED WORKMANSHIP TYPE AND MANNER ACCEPTABLE TO THE ARCHITECT AND OWNER.
- ALL DIMENSIONS ARE DIMENSIONED TO GRID LINE, FACE OF CONCRETE, FACE OF CMU, AND FACE OF METAL STUD, UNLESS NOTED OTHERWISE. ALL DIMENSIONS ARE ACTUAL AND NOT NOMINAL. REFER TO CIVIL DRAWINGS FOR EXTERIOR BUILDING DIMENSIONS. FIELD VERIFY ALL DIMENSIONS.
- DO NOT SCALE DRAWINGS. DIMENSIONS SHALL GOVERN EACH BUILDING COMPONENT LOCATION. BRING ANY DISCREPANCIES TO THE ARCHITECT'S ATTENTION IN WRITING IMMEDIATELY. OBTAIN CLARIFICATION PRIOR TO PROCEEDING WITH THE WORK.
- PROVIDE SHEET METAL OR FIRE RETARDANT WOOD BLOCKING IN WALL CAVITIES FOR ITEMS THAT ARE REQUIRED TO BE SECURED TO THE WALLS.
- CAULK INTERSECTION BETWEEN DIFFERENT MATERIALS.
- BUILDING FIRST FLOOR REFERENCE ELEVATION IS 100'–0". SEE CIVIL DRAWINGS FOR USGS ELEVATION.
- ALL DEBRIS FROM DEMOLITION WORK IS TO BE REMOVED FROM THE SITE. NO DEBRIS IS ALLOWED TO BE USED AS BACKFILL MATERIAL.
- DEFINITION OF SYSTEM TO MEAN ANY PART OR COMPONENT CONNECTED TO THAT ELEMENT OF THE BUILDING.
- THE FOLLOWING MATERIAL SHALL BE SALVAGED BY THE CONTRACTOR AND REMAIN THE PROPERTY OF THE OWNER: ROOFING SLATE, COPPER RIDGE CAPS, COPPER GUTTERS, AND COPPER DOWNSPOUTS. THE QUANTITY OF THE MATERIAL TO BE RETAINED IS TO BE DETERMINED BY VAIHCS. AT THE TIME OF THE DEMOLITION THE CONTRACTOR WILL PERFORM THE SALVAGE ACTIVITIES AND STORE THE MATERIALS IN BUILDING 67, AS WELL AS PROVIDING A COMPILED LOG OF THE ITEMS SALVAGED.

100% CONSTRUCTION DOCUMENTS

Revisions:	Date

CONSULTANTS:

Applied Engineering Services
9100 Keystone Crossing, Suite 200
Indianapolis, IN 46240

ARCHITECT/ENGINEERS:

AMERICAN STRUCTUREPOINT INC.
7260 Shadeland Station | Indianapolis, Indiana 46256
TEL 317.547.5580 | FAX 317.543.0270
www.structurepoint.com

STATE OF ILLINOIS — DANIEL L. WEINHEIMER 001-011851 — LICENSED PROFESSIONAL ENGINEER

Drawing Title: EXISTING BASEMENT FLOOR PLAN

Approved: Project Director

Project Title: VA Medical Center, Illiana Healthcare System, Demolish Buildings 12, 26, 40, and 74

Location: Danville, Indiana

Date: 2014-12-12 | Checked: DLW | Drawn: TKP

Project Number: 550-11-116

Building Number: 12

Drawing Number: AD-101

Dwg. 22 of 36

Office of Construction and Facilities Management

VA U.S. Department of Veterans Affairs

VA FORM 08-6231

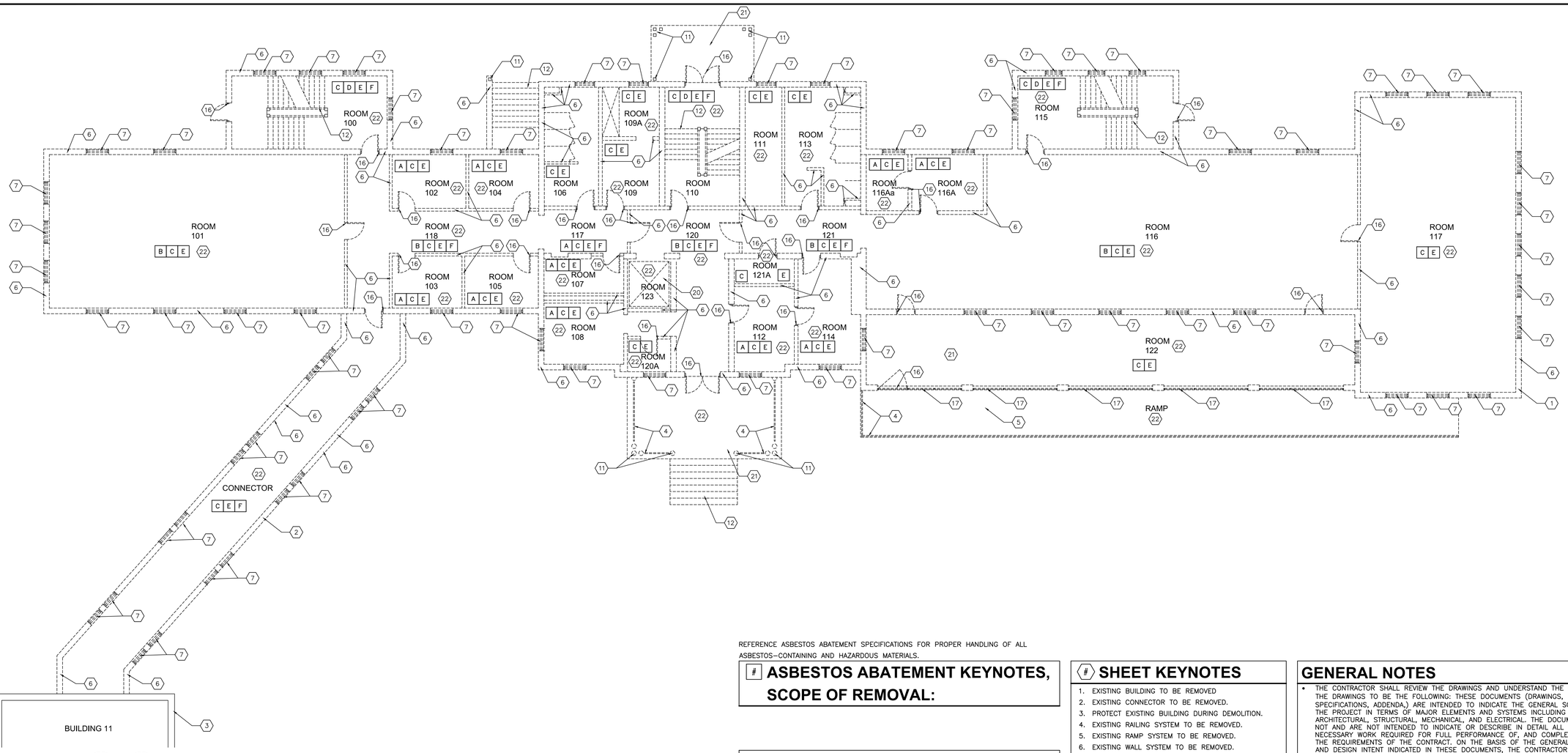

FIRST FLOOR PLAN
SCALE: 1/8" = 1'-0"
1 AD-102

N

REFERENCE ASBESTOS ABATEMENT SPECIFICATIONS FOR PROPER HANDLING OF ALL ASBESTOS–CONTAINING AND HAZARDOUS MATERIALS.

ASBESTOS ABATEMENT KEYNOTES, SCOPE OF REMOVAL:

A. FLOOR TILE/MASTIC/TAR PAPER
B. FLOOR TILE/MASTIC/TAR PAPER UNDER LINOLEUM
C. WINDOW GLAZING & CAULKING
D. FIRE DOORS
E. FLUORESCENT TUBES AND BALLASTS
F. EXIT/EMERGENCY LIGHT BATTERIES

SHEET KEYNOTES

1. EXISTING BUILDING TO BE REMOVED
2. EXISTING CONNECTOR TO BE REMOVED.
3. PROTECT EXISTING BUILDING DURING DEMOLITION.
4. EXISTING RAILING SYSTEM TO BE REMOVED.
5. EXISTING RAMP SYSTEM TO BE REMOVED.
6. EXISTING WALL SYSTEM TO BE REMOVED.
7. EXISTING WINDOW SYSTEM TO BE REMOVED.
8. EXISTING DORMER SYSTEM TO BE REMOVED.
9. EXISTING ROOF SYSTEM TO BE REMOVED.
10. EXISTING ROOF DRAINAGE SYSTEM TO BE REMOVED.
11. EXISTING STRUCTURAL SYSTEM TO BE REMOVED.
12. EXISTING STAIR SYSTEM TO BE REMOVED.
13. EXISTING FOUNDATION SYSTEM TO BE REMOVED.
14. EXISTING MECHANICAL SYSTEM TO BE REMOVED.
15. EXISTING ELECTRICAL SYSTEM TO BE REMOVED.
16. EXISTING DOOR SYSTEM TO BE REMOVED.
17. EXISTING WINDOW SCREEN SYSTEM TO BE REMOVED.
18. EXISTING PLUMBING SYSTEM TO BE REMOVED.
19. EXISTING AWNING SYSTEM TO BE REMOVED.
20. EXISTING ELEVATOR SYSTEM TO BE REMOVED.
21. EXISTING CONCRETE SLAB TO BE REMOVED.
22. FIXTURES AND FITTINGS TO BE REMOVED.

GENERAL NOTES

- THE CONTRACTOR SHALL REVIEW THE DRAWINGS AND UNDERSTAND THE SCOPE OF THE DRAWINGS TO BE THE FOLLOWING: THESE DOCUMENTS (DRAWINGS, SPECIFICATIONS, ADDENDA,) ARE INTENDED TO INDICATE THE GENERAL SCOPE OF THE PROJECT IN TERMS OF MAJOR ELEMENTS AND SYSTEMS INCLUDING ARCHITECTURAL, STRUCTURAL, MECHANICAL, AND ELECTRICAL. THE DOCUMENTS DO NOT AND ARE NOT INTENDED TO INDICATE OR DESCRIBE IN DETAIL ALL THE NECESSARY WORK REQUIRED FOR FULL PERFORMANCE OF, AND COMPLETION OF THE REQUIREMENTS OF THE CONTRACT. ON THE BASIS OF THE GENERAL SCOPE AND DESIGN INTENT INDICATED IN THESE DOCUMENTS, THE CONTRACTOR SHALL FURNISH ALL ITEMS REQUIRED FOR THE PROPER EXECUTION AND COMPLETION OF THE WORK.
- FIELD VERIFY LOCATION OF CONSTRUCTION ELEMENTS, DOCUMENTS ARE REPRESENTATIVE TO CONVEY DESIGN INTENT AND ARE NOT AS–BUILT DRAWINGS.
- THE CONTRACTORS INVOLVED IN THIS PROJECT SHALL BE RESPONSIBLE FOR DESIGNING, INSTALLING, OR REMOVING THEIR RESPECTIVE WORK AND SYSTEMS TO MEET ALL APPLICABLE FEDERAL, STATE, AND LOCAL CODES, LAWS, SAFETY REGULATIONS, AND HAZARDOUS WASTE LAWS. THE CONTRACTOR SHALL FURNISH ALL NECESSARY PERMITS.
- COORDINATE WORK OF ALL TRADES PRIOR TO STARTING DEMOLITION OR CONSTRUCTION.
- UTILITY, ELECTRICAL, AND DATA SERVICE TO ADJACENT BUILDINGS TO REMAIN IN SERVICE. PROTECT AGAINST DAMAGE DURING DEMOLITION OR CONSTRUCTION WORK. PROMPTLY REPAIR DAMAGE TO SERVICES TO ADJACENT BUILDINGS CAUSED BY DEMOLITION AND CONSTRUCTION OPERATIONS.
- CAREFULLY CUT AND REMOVE PORTIONS OF WORK INDICATED TO BE DEMOLISHED SO AS NOT TO DISTURB ADJACENT AREAS OF CONSTRUCTION TO REMAIN. RESTORE AND REPAIR ANY AREAS DAMAGED IN THE COURSE OF DEMOLITION AND CONSTRUCTION.
- THE CONTRACTOR SHALL FURNISH PROTECTION TO PREVENT DAMAGE TO ANY EXISTING CONSTRUCTION, EQUIPMENT, AND MACHINERY.
- ALL WORK SHALL BE PERFORMED IN A SKILLED WORKMANSHIP TYPE AND MANNER ACCEPTABLE TO THE ARCHITECT AND OWNER.
- ALL DIMENSIONS ARE DIMENSIONED TO GRID LINE, FACE OF CONCRETE, FACE OF CMU, AND FACE OF METAL STUD, UNLESS NOTED OTHERWISE. ALL DIMENSIONS ARE ACTUAL AND NOT NOMINAL. REFER TO CIVIL DRAWINGS FOR EXTERIOR BUILDING DIMENSIONS. FIELD VERIFY ALL DIMENSIONS.
- DO NOT SCALE DRAWINGS. DIMENSIONS SHALL GOVERN EACH BUILDING COMPONENT LOCATION. BRING ANY DISCREPANCIES TO THE ARCHITECT'S ATTENTION IN WRITING IMMEDIATELY. OBTAIN CLARIFICATION PRIOR TO PROCEEDING WITH THE WORK.
- PROVIDE SHEET METAL OR FIRE RETARDANT WOOD BLOCKING IN WALL CAVITIES FOR ITEMS THAT ARE REQUIRED TO BE SECURED TO THE WALLS.
- CAULK INTERSECTION BETWEEN DIFFERENT MATERIALS.
- BUILDING FIRST FLOOR REFERENCE ELEVATION IS 100'–0". SEE CIVIL DRAWINGS FOR USGS ELEVATION.
- ALL DEBRIS FROM DEMOLITION WORK IS TO BE REMOVED FROM THE SITE. NO DEBRIS IS ALLOWED TO BE USED AS BACKFILL MATERIAL.
- DEFINITION OF SYSTEM TO MEAN ANY PART OR COMPONENT CONNECTED TO THAT ELEMENT OF THE BUILDING.
- THE FOLLOWING MATERIAL SHALL BE SALVAGED BY THE CONTRACTOR AND REMAIN THE PROPERTY OF THE OWNER: ROOFING SLATE, COPPER RIDGE CAPS, COPPER GUTTERS, AND COPPER DOWNSPOUTS. THE QUANTITY OF THE MATERIAL TO BE RETAINED IS TO BE DETERMINED BY VAHCS. AT THE TIME OF THE DEMOLITION THE CONTRACTOR WILL PERFORM THE SALVAGE ACTIVITIES AND STORE THE MATERIALS IN BUILDING 67, AS WELL AS PROVIDING A COMPILED LOG OF THE ITEMS SALVAGED.

100% CONSTRUCTION DOCUMENTS

Revisions	Date

CONSULTANTS:

Applied Engineering Services
9100 Keystone Crossing, Suite 200
Indianapolis, IN 46240

ARCHITECT/ENGINEERS:

AMERICAN STRUCTUREPOINT INC.
7260 Shadeland Station | Indianapolis, Indiana 46256
TEL 317.547.5580 | FAX 317.543.0270
www.structurepoint.com

STATE OF ILLINOIS — DANIEL L. WENNEMER 021-011851 — LICENSED PROFESSIONAL ENGINEER

Drawing Title: EXISTING FIRST FLOOR PLAN

Approved: Project Director

Project Title: VA Medical Center, Illiana Healthcare System, Demolish Buildings 12, 26, 40, and 74

Location: Danville, Indiana

Date: 2014-12-12 | Checked: DLW | Drawn: TKP

Project Number: 550-11-116

Building Number: 12

Drawing Number: AD-102

Dwg. 23 of 36

Office of Construction and Facilities Management

VA U.S. Department of Veterans Affairs

VA FORM 08-6231

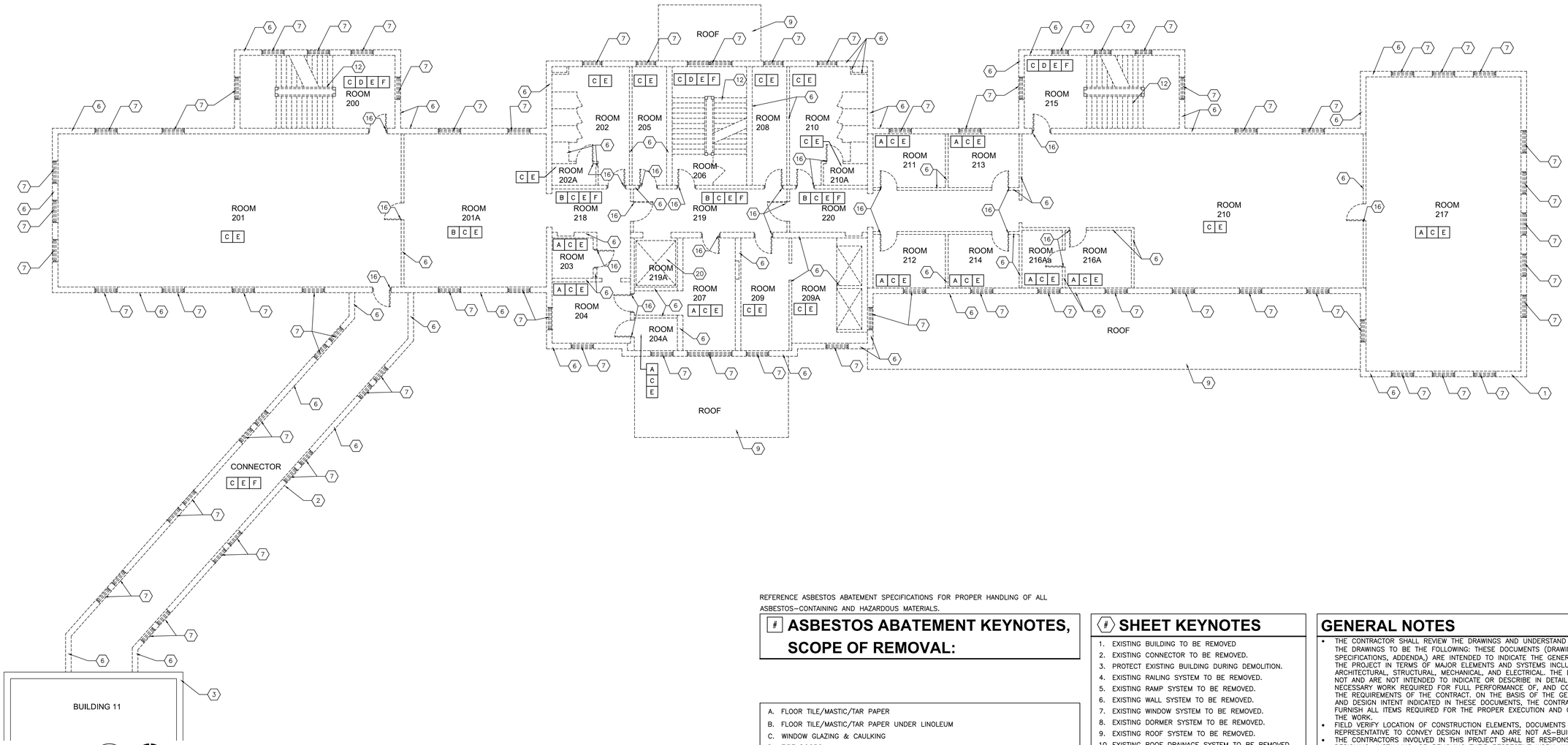

SECOND FLOOR PLAN (1 / AD-103)
SCALE: 1/8" = 1'-0"

N

REFERENCE ASBESTOS ABATEMENT SPECIFICATIONS FOR PROPER HANDLING OF ALL ASBESTOS–CONTAINING AND HAZARDOUS MATERIALS.

ASBESTOS ABATEMENT KEYNOTES, SCOPE OF REMOVAL:

A. FLOOR TILE/MASTIC/TAR PAPER
B. FLOOR TILE/MASTIC/TAR PAPER UNDER LINOLEUM
C. WINDOW GLAZING & CAULKING
D. FIRE DOORS
E. FLUORESCENT TUBES AND BALLASTS
F. EXIT/EMERGENCY LIGHT BATTERIES

SHEET KEYNOTES

1. EXISTING BUILDING TO BE REMOVED
2. EXISTING CONNECTOR TO BE REMOVED.
3. PROTECT EXISTING BUILDING DURING DEMOLITION.
4. EXISTING RAILING SYSTEM TO BE REMOVED.
5. EXISTING RAMP SYSTEM TO BE REMOVED.
6. EXISTING WALL SYSTEM TO BE REMOVED.
7. EXISTING WINDOW SYSTEM TO BE REMOVED.
8. EXISTING DORMER SYSTEM TO BE REMOVED.
9. EXISTING ROOF SYSTEM TO BE REMOVED.
10. EXISTING ROOF DRAINAGE SYSTEM TO BE REMOVED.
11. EXISTING STRUCTURAL SYSTEM TO BE REMOVED.
12. EXISTING STAIR SYSTEM TO BE REMOVED.
13. EXISTING FOUNDATION SYSTEM TO BE REMOVED.
14. EXISTING MECHANICAL SYSTEM TO BE REMOVED.
15. EXISTING ELECTRICAL SYSTEM TO BE REMOVED.
16. EXISTING DOOR SYSTEM TO BE REMOVED.
17. EXISTING WINDOW SCREEN SYSTEM TO BE REMOVED.
18. EXISTING PLUMBING SYSTEM TO BE REMOVED.
19. EXISTING AWNING SYSTEM TO BE REMOVED.
20. EXISTING ELEVATOR SYSTEM TO BE REMOVED.
21. EXISTING CONCRETE SLAB TO BE REMOVED.
22. FIXTURES AND FITTINGS TO BE REMOVED.

GENERAL NOTES

- THE CONTRACTOR SHALL REVIEW THE DRAWINGS AND UNDERSTAND THE SCOPE OF THE DRAWINGS TO BE THE FOLLOWING: THESE DOCUMENTS (DRAWINGS, SPECIFICATIONS, ADDENDA) ARE INTENDED TO INDICATE THE GENERAL SCOPE OF THE PROJECT IN TERMS OF MAJOR ELEMENTS AND SYSTEMS INCLUDING ARCHITECTURAL, STRUCTURAL, MECHANICAL, AND ELECTRICAL. THE DOCUMENTS DO NOT AND ARE NOT INTENDED TO INDICATE OR DESCRIBE IN DETAIL ALL THE NECESSARY WORK REQUIRED FOR FULL PERFORMANCE OF, AND COMPLETION OF THE REQUIREMENTS OF THE CONTRACT. ON THE BASIS OF THE GENERAL SCOPE AND DESIGN INTENT INDICATED IN THESE DOCUMENTS, THE CONTRACTOR SHALL FURNISH ALL ITEMS REQUIRED FOR THE PROPER EXECUTION AND COMPLETION OF THE WORK.
- FIELD VERIFY LOCATION OF CONSTRUCTION ELEMENTS, DOCUMENTS ARE REPRESENTATIVE TO CONVEY DESIGN INTENT AND ARE NOT AS–BUILT DRAWINGS.
- THE CONTRACTORS INVOLVED IN THIS PROJECT SHALL BE RESPONSIBLE FOR DESIGNING, INSTALLING, OR REMOVING THEIR RESPECTIVE WORK AND SYSTEMS TO MEET ALL APPLICABLE FEDERAL, STATE, AND LOCAL CODES, LAWS, SAFETY REGULATIONS, AND HAZARDOUS WASTE LAWS. THE CONTRACTOR SHALL FURNISH ALL NECESSARY PERMITS.
- COORDINATE WORK OF ALL TRADES PRIOR TO STARTING DEMOLITION OR CONSTRUCTION.
- UTILITY, ELECTRICAL, AND DATA SERVICE TO ADJACENT BUILDINGS TO REMAIN IN SERVICE. PROTECT AGAINST DAMAGE DURING DEMOLITION OR CONSTRUCTION WORK. PROMPTLY REPAIR DAMAGE TO SERVICES TO ADJACENT BUILDINGS CAUSED BY DEMOLITION AND CONSTRUCTION OPERATIONS.
- CAREFULLY CUT AND REMOVE PORTIONS OF WORK INDICATED TO BE DEMOLISHED SO AS NOT TO DISTURB ADJACENT AREAS OF CONSTRUCTION TO REMAIN. RESTORE AND REPAIR ANY AREAS DAMAGED IN THE COURSE OF DEMOLITION AND CONSTRUCTION.
- THE CONTRACTOR SHALL FURNISH PROTECTION TO PREVENT DAMAGE TO ANY EXISTING CONSTRUCTION, EQUIPMENT, AND MACHINERY.
- ALL WORK SHALL BE PERFORMED IN A SKILLED WORKMANSHIP TYPE AND MANNER ACCEPTABLE TO THE ARCHITECT AND OWNER.
- ALL DIMENSIONS ARE DIMENSIONED TO GRID LINE, FACE OF CONCRETE, FACE OF CMU, AND FACE OF METAL STUD, UNLESS NOTED OTHERWISE. ALL DIMENSIONS ARE ACTUAL AND NOT NOMINAL. REFER TO CIVIL DRAWINGS FOR EXTERIOR BUILDING DIMENSIONS. FIELD VERIFY ALL DIMENSIONS.
- DO NOT SCALE DRAWINGS. DIMENSIONS SHALL GOVERN EACH BUILDING COMPONENT LOCATION. BRING ANY DISCREPANCIES TO THE ARCHITECT'S ATTENTION IN WRITING IMMEDIATELY. OBTAIN CLARIFICATION PRIOR TO PROCEEDING WITH THE WORK.
- PROVIDE SHEET METAL OR FIRE RETARDANT WOOD BLOCKING IN WALL CAVITIES FOR ITEMS THAT ARE REQUIRED TO BE SECURED TO THE WALLS.
- CAULK INTERSECTION BETWEEN DIFFERENT MATERIALS.
- BUILDING FIRST FLOOR REFERENCE ELEVATION IS 100'–0". SEE CIVIL DRAWINGS FOR USGS ELEVATION.
- ALL DEBRIS FROM DEMOLITION WORK IS TO BE REMOVED FROM THE SITE. NO DEBRIS IS ALLOWED TO BE USED AS BACKFILL MATERIAL.
- DEFINITION OF SYSTEM TO MEAN ANY PART OR COMPONENT CONNECTED TO THAT ELEMENT OF THE BUILDING.
- THE FOLLOWING MATERIAL SHALL BE SALVAGED BY THE CONTRACTOR AND REMAIN THE PROPERTY OF THE OWNER: ROOFING SLATE, COPPER RIDGE CAPS, COPPER GUTTERS, AND COPPER DOWNSPOUTS. THE QUANTITY OF THE MATERIAL TO BE RETAINED IS TO BE DETERMINED BY VAIHCS. AT THE TIME OF THE DEMOLITION THE CONTRACTOR WILL PERFORM THE SALVAGE ACTIVITIES AND STORE THE MATERIALS IN BUILDING 67, AS WELL AS PROVIDING A COMPILED LOG OF THE ITEMS SALVAGED.

100% CONSTRUCTION DOCUMENTS

Revisions:	Date

CONSULTANTS:

Applied Engineering Services
9100 Keystone Crossing, Suite 200
Indianapolis, IN 46240

ARCHITECT/ENGINEERS:

AMERICAN STRUCTUREPOINT INC.
7260 Shadeland Station | Indianapolis, Indiana 46256
TEL 317.547.5580 | FAX 317.543.0270
www.structurepoint.com

STATE OF ILLINOIS — DANIEL L. WEINHEIMER 001-011851 — LICENSED PROFESSIONAL ENGINEER

Drawing Title: EXISTING SECOND FLOOR PLAN

Approved: Project Director

Project Title: VA Medical Center, Illiana Healthcare System, Demolish Buildings 12, 26, 40, and 74

Location: Danville, Indiana

Date: 2014-12-12 | Checked: DLW | Drawn: TKP

Project Number: 550-11-116

Building Number: 12

Drawing Number: AD-103

Dwg. 24 of 36

Office of Construction and Facilities Management

VA U.S. Department of Veterans Affairs

VA FORM 08-6231

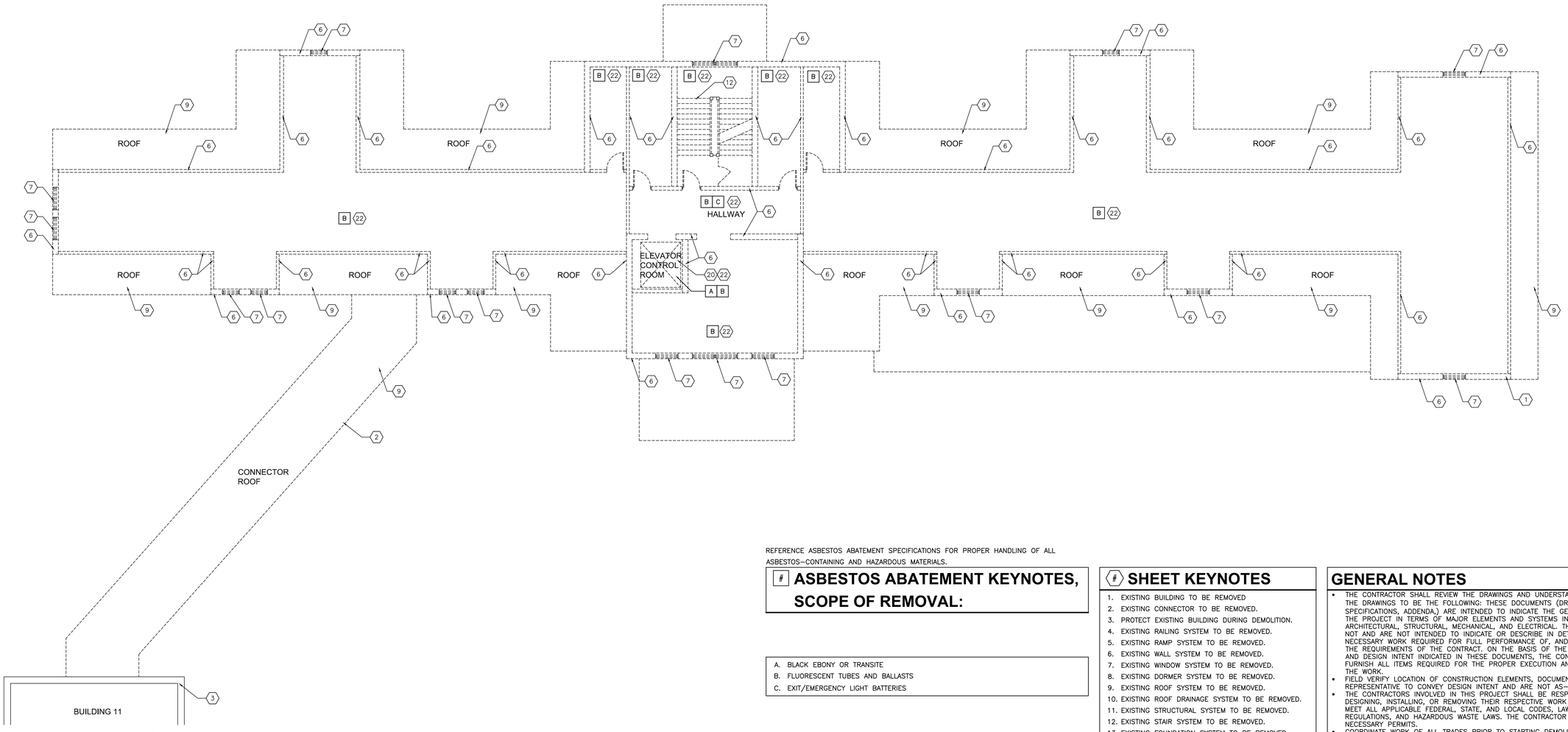

ATTIC FLOOR PLAN
SCALE: 1/8" = 1'-0"
1 AD-104

N

REFERENCE ASBESTOS ABATEMENT SPECIFICATIONS FOR PROPER HANDLING OF ALL ASBESTOS–CONTAINING AND HAZARDOUS MATERIALS.

ASBESTOS ABATEMENT KEYNOTES, SCOPE OF REMOVAL:

A. BLACK EBONY OR TRANSITE
B. FLUORESCENT TUBES AND BALLASTS
C. EXIT/EMERGENCY LIGHT BATTERIES

SHEET KEYNOTES

1. EXISTING BUILDING TO BE REMOVED
2. EXISTING CONNECTOR TO BE REMOVED.
3. PROTECT EXISTING BUILDING DURING DEMOLITION.
4. EXISTING RAILING SYSTEM TO BE REMOVED.
5. EXISTING RAMP SYSTEM TO BE REMOVED.
6. EXISTING WALL SYSTEM TO BE REMOVED.
7. EXISTING WINDOW SYSTEM TO BE REMOVED.
8. EXISTING DORMER SYSTEM TO BE REMOVED.
9. EXISTING ROOF SYSTEM TO BE REMOVED.
10. EXISTING ROOF DRAINAGE SYSTEM TO BE REMOVED.
11. EXISTING STRUCTURAL SYSTEM TO BE REMOVED.
12. EXISTING STAIR SYSTEM TO BE REMOVED.
13. EXISTING FOUNDATION SYSTEM TO BE REMOVED.
14. EXISTING MECHANICAL SYSTEM TO BE REMOVED.
15. EXISTING ELECTRICAL SYSTEM TO BE REMOVED.
16. EXISTING DOOR SYSTEM TO BE REMOVED.
17. EXISTING WINDOW SCREEN SYSTEM TO BE REMOVED.
18. EXISTING PLUMBING SYSTEM TO BE REMOVED.
19. EXISTING AWNING SYSTEM TO BE REMOVED.
20. EXISTING ELEVATOR SYSTEM TO BE REMOVED.
21. EXISTING CONCRETE SLAB TO BE REMOVED.
22. FIXTURES AND FITTINGS TO BE REMOVED.

GENERAL NOTES

- THE CONTRACTOR SHALL REVIEW THE DRAWINGS AND UNDERSTAND THE SCOPE OF THE DRAWINGS TO BE THE FOLLOWING: THESE DOCUMENTS (DRAWINGS, SPECIFICATIONS, ADDENDA,) ARE INTENDED TO INDICATE THE GENERAL SCOPE OF THE PROJECT IN TERMS OF MAJOR ELEMENTS AND SYSTEMS INCLUDING ARCHITECTURAL, STRUCTURAL, MECHANICAL, AND ELECTRICAL. THE DOCUMENTS DO NOT AND ARE NOT INTENDED TO INDICATE OR DESCRIBE IN DETAIL ALL THE NECESSARY WORK REQUIRED FOR FULL PERFORMANCE OF, AND COMPLETION OF THE REQUIREMENTS OF THE CONTRACT. ON THE BASIS OF THE GENERAL SCOPE AND DESIGN INTENT INDICATED IN THESE DOCUMENTS, THE CONTRACTOR SHALL FURNISH ALL ITEMS REQUIRED FOR THE PROPER EXECUTION AND COMPLETION OF THE WORK.
- FIELD VERIFY LOCATION OF CONSTRUCTION ELEMENTS, DOCUMENTS ARE REPRESENTATIVE TO CONVEY DESIGN INTENT AND ARE NOT AS–BUILT DRAWINGS.
- THE CONTRACTORS INVOLVED IN THIS PROJECT SHALL BE RESPONSIBLE FOR DESIGNING, INSTALLING, OR REMOVING THEIR RESPECTIVE WORK AND SYSTEMS TO MEET ALL APPLICABLE FEDERAL, STATE, AND LOCAL CODES, LAWS, SAFETY REGULATIONS, AND HAZARDOUS WASTE LAWS. THE CONTRACTOR SHALL FURNISH ALL NECESSARY PERMITS.
- COORDINATE WORK OF ALL TRADES PRIOR TO STARTING DEMOLITION OR CONSTRUCTION.
- UTILITY, ELECTRICAL, AND DATA SERVICE TO ADJACENT BUILDINGS TO REMAIN IN SERVICE. PROTECT AGAINST DAMAGE DURING DEMOLITION OR CONSTRUCTION WORK. PROMPTLY REPAIR DAMAGE TO SERVICES TO ADJACENT BUILDINGS CAUSED BY DEMOLITION AND CONSTRUCTION OPERATIONS.
- CAREFULLY CUT AND REMOVE PORTIONS OF WORK INDICATED TO BE DEMOLISHED SO AS NOT TO DISTURB ADJACENT AREAS OF CONSTRUCTION TO REMAIN. RESTORE AND REPAIR ANY AREAS DAMAGED IN THE COURSE OF DEMOLITION AND CONSTRUCTION.
- THE CONTRACTOR SHALL FURNISH PROTECTION TO PREVENT DAMAGE TO ANY EXISTING CONSTRUCTION, EQUIPMENT, AND MACHINERY.
- ALL WORK SHALL BE PERFORMED IN A SKILLED WORKMANSHIP TYPE AND MANNER ACCEPTABLE TO THE ARCHITECT AND OWNER.
- ALL DIMENSIONS ARE DIMENSIONED TO GRID LINE, FACE OF CONCRETE, FACE OF CMU, AND FACE OF METAL STUD, UNLESS NOTED OTHERWISE. ALL DIMENSIONS ARE ACTUAL AND NOT NOMINAL. REFER TO CIVIL DRAWINGS FOR EXTERIOR BUILDING DIMENSIONS. FIELD VERIFY ALL DIMENSIONS.
- DO NOT SCALE DRAWINGS. DIMENSIONS SHALL GOVERN EACH BUILDING COMPONENT LOCATION. BRING ANY DISCREPANCIES TO THE ARCHITECT'S ATTENTION IN WRITING IMMEDIATELY. OBTAIN CLARIFICATION PRIOR TO PROCEEDING WITH THE WORK.
- PROVIDE SHEET METAL OR FIRE RETARDANT WOOD BLOCKING IN WALL CAVITIES FOR ITEMS THAT ARE REQUIRED TO BE SECURED TO THE WALLS.
- CAULK INTERSECTION BETWEEN DIFFERENT MATERIALS.
- BUILDING FIRST FLOOR REFERENCE ELEVATION IS 100'–0". SEE CIVIL DRAWINGS FOR USGS ELEVATION.
- ALL DEBRIS FROM DEMOLITION WORK IS TO BE REMOVED FROM THE SITE. NO DEBRIS IS ALLOWED TO BE USED AS BACKFILL MATERIAL.
- DEFINITION OF SYSTEM TO MEAN ANY PART OR COMPONENT CONNECTED TO THAT ELEMENT OF THE BUILDING.
- THE FOLLOWING MATERIAL SHALL BE SALVAGED BY THE CONTRACTOR AND REMAIN THE PROPERTY OF THE OWNER: ROOFING SLATE, COPPER RIDGE CAPS, COPPER GUTTERS, AND COPPER DOWNSPOUTS. THE QUANTITY OF THE MATERIAL TO BE RETAINED IS TO BE DETERMINED BY VAIHCS. AT THE TIME OF THE DEMOLITION THE CONTRACTOR WILL PERFORM THE SALVAGE ACTIVITIES AND STORE THE MATERIALS IN BUILDING 67, AS WELL AS PROVIDING A COMPILED LOG OF THE ITEMS SALVAGED.

100% CONSTRUCTION DOCUMENTS

Revisions:	Date

CONSULTANTS:

Applied Engineering Services
9100 Keystone Crossing, Suite 200
Indianapolis, IN 46240

ARCHITECT/ENGINEERS:

AMERICAN STRUCTUREPOINT INC.
7260 Shadeland Station | Indianapolis, Indiana 46256
TEL 317.547.5580 | FAX 317.543.0270
www.structurepoint.com

STATE OF ILLINOIS — DANIEL L. WEINHEIMER 001-011651 — LICENSED PROFESSIONAL ENGINEER

Drawing Title: EXISTING ATTIC FLOOR PLAN

Approved: Project Director

Project Title: VA Medical Center, Illiana Healthcare System, Demolish Buildings 12, 26, 40, and 74

Location: Danville, Indiana

Date: 2014-12-12 | Checked: DLW | Drawn: TKP

Project Number: 550-11-116

Building Number: 12

Drawing Number: AD-104

Dwg. 25 of 36

Office of Construction and Facilities Management

VA U.S. Department of Veterans Affairs

VA FORM 08-6231

NORTH ELEVATION (2 / AD-201)
SCALE: 1/8" = 1'-0"

WEST ELEVATION (1 / AD-201)
SCALE: 1/8" = 1'-0"

SHEET KEYNOTES

1. EXISTING BUILDING TO BE REMOVED
2. EXISTING CONNECTOR TO BE REMOVED.
3. PROTECT EXISTING BUILDING DURING DEMOLITION.
4. EXISTING RAILING SYSTEM TO BE REMOVED.
5. EXISTING RAMP SYSTEM TO BE REMOVED.
6. EXISTING WALL SYSTEM TO BE REMOVED.
7. EXISTING WINDOW SYSTEM TO BE REMOVED.
8. EXISTING DORMER SYSTEM TO BE REMOVED.
9. EXISTING ROOF SYSTEM TO BE REMOVED.
10. EXISTING ROOF DRAINAGE SYSTEM TO BE REMOVED.
11. EXISTING STRUCTURAL SYSTEM TO BE REMOVED.
12. EXISTING STAIR SYSTEM TO BE REMOVED.
13. EXISTING FOUNDATION SYSTEM TO BE REMOVED.
14. EXISTING MECHANICAL SYSTEM TO BE REMOVED.
15. EXISTING ELECTRICAL SYSTEM TO BE REMOVED.
16. EXISTING DOOR SYSTEM TO BE REMOVED.
17. EXISTING WINDOW SCREEN SYSTEM TO BE REMOVED.
18. EXISTING PLUMBING SYSTEM TO BE REMOVED.
19. EXISTING AWNING SYSTEM TO BE REMOVED.
20. EXISTING ELEVATOR SYSTEM TO BE REMOVED.
21. EXISTING CONCRETE SLAB TO BE REMOVED.
22. FIXTURES AND FITTINGS TO BE REMOVED.

GENERAL NOTES

- THE CONTRACTOR SHALL REVIEW THE DRAWINGS AND UNDERSTAND THE SCOPE OF THE DRAWINGS TO BE THE FOLLOWING: THESE DOCUMENTS (DRAWINGS, SPECIFICATIONS, ADDENDA,) ARE INTENDED TO INDICATE THE GENERAL SCOPE OF THE PROJECT IN TERMS OF MAJOR ELEMENTS AND SYSTEMS INCLUDING ARCHITECTURAL, STRUCTURAL, MECHANICAL, AND ELECTRICAL. THE DOCUMENTS DO NOT AND ARE NOT INTENDED TO INDICATE OR DESCRIBE IN DETAIL ALL THE NECESSARY WORK REQUIRED FOR FULL PERFORMANCE OF, AND COMPLETION OF THE REQUIREMENTS OF THE CONTRACT. ON THE BASIS OF THE GENERAL SCOPE AND DESIGN INTENT INDICATED IN THESE DOCUMENTS, THE CONTRACTOR SHALL FURNISH ALL ITEMS REQUIRED FOR THE PROPER EXECUTION AND COMPLETION OF THE WORK.
- FIELD VERIFY LOCATION OF CONSTRUCTION ELEMENTS, DOCUMENTS ARE REPRESENTATIVE TO CONVEY DESIGN INTENT AND ARE NOT AS-BUILT DRAWINGS.
- THE CONTRACTORS INVOLVED IN THIS PROJECT SHALL BE RESPONSIBLE FOR DESIGNING, INSTALLING, OR REMOVING THEIR RESPECTIVE WORK AND SYSTEMS TO MEET ALL APPLICABLE FEDERAL, STATE, AND LOCAL CODES, LAWS, SAFETY REGULATIONS, AND HAZARDOUS WASTE LAWS. THE CONTRACTOR SHALL FURNISH ALL NECESSARY PERMITS.
- COORDINATE WORK OF ALL TRADES PRIOR TO STARTING DEMOLITION OR CONSTRUCTION.
- UTILITY, ELECTRICAL, AND DATA SERVICE TO ADJACENT BUILDINGS TO REMAIN IN SERVICE. PROTECT AGAINST DAMAGE DURING DEMOLITION OR CONSTRUCTION WORK. PROMPTLY REPAIR DAMAGE TO SERVICES TO ADJACENT BUILDINGS CAUSED BY DEMOLITION AND CONSTRUCTION OPERATIONS.
- CAREFULLY CUT AND REMOVE PORTIONS OF WORK INDICATED TO BE DEMOLISHED SO AS NOT TO DISTURB ADJACENT AREAS OF CONSTRUCTION TO REMAIN. RESTORE AND REPAIR ANY AREAS DAMAGED IN THE COURSE OF DEMOLITION AND CONSTRUCTION.
- THE CONTRACTOR SHALL FURNISH PROTECTION TO PREVENT DAMAGE TO ANY EXISTING CONSTRUCTION, EQUIPMENT, AND MACHINERY.
- ALL WORK SHALL BE PERFORMED IN A SKILLED WORKMANSHIP TYPE AND MANNER ACCEPTABLE TO THE ARCHITECT AND OWNER.
- ALL DIMENSIONS ARE DIMENSIONED TO GRID LINE, FACE OF CONCRETE, FACE OF CMU, AND FACE OF METAL STUD, UNLESS NOTED OTHERWISE. ALL DIMENSIONS ARE ACTUAL AND NOT NOMINAL. REFER TO CIVIL DRAWINGS FOR EXTERIOR BUILDING DIMENSIONS. FIELD VERIFY ALL DIMENSIONS.
- DO NOT SCALE DRAWINGS. DIMENSIONS SHALL GOVERN EACH BUILDING COMPONENT LOCATION. BRING ANY DISCREPANCIES TO THE ARCHITECT'S ATTENTION IN WRITING IMMEDIATELY. OBTAIN CLARIFICATION PRIOR TO PROCEEDING WITH THE WORK.
- PROVIDE SHEET METAL OR FIRE RETARDANT WOOD BLOCKING IN WALL CAVITIES FOR ITEMS THAT ARE REQUIRED TO BE SECURED TO THE WALLS.
- CAULK INTERSECTION BETWEEN DIFFERENT MATERIALS.
- BUILDING FIRST FLOOR REFERENCE ELEVATION IS 100'-0". SEE CIVIL DRAWINGS FOR USGS ELEVATION.
- ALL DEBRIS FROM DEMOLITION WORK IS TO BE REMOVED FROM THE SITE. NO DEBRIS IS ALLOWED TO BE USED AS BACKFILL MATERIAL.
- DEFINITION OF SYSTEM TO MEAN ANY PART OR COMPONENT CONNECTED TO THAT ELEMENT OF THE BUILDING.
- THE FOLLOWING MATERIAL SHALL BE SALVAGED BY THE CONTRACTOR AND REMAIN THE PROPERTY OF THE OWNER: ROOFING SLATE, COPPER RIDGE CAPS, COPPER GUTTERS, AND COPPER DOWNSPOUTS. THE QUANTITY OF THE MATERIAL TO BE RETAINED IS TO BE DETERMINED BY VAIHCS. AT THE TIME OF THE DEMOLITION THE CONTRACTOR WILL PERFORM THE SALVAGE ACTIVITIES AND STORE THE MATERIALS IN BUILDING 67, AS WELL AS PROVIDING A COMPILED LOG OF THE ITEMS SALVAGED.

100% CONSTRUCTION DOCUMENTS

Revisions:	Date

CONSULTANTS:

Applied Engineering Services
9100 Keystone Crossing, Suite 200
Indianapolis, IN 46240

ARCHITECT/ENGINEERS:

AMERICAN STRUCTUREPOINT INC.
7260 Shadeland Station | Indianapolis, Indiana 46256
TEL 317.547.5580 | FAX 317.543.0270
www.structurepoint.com

STATE OF ILLINOIS — DANIEL L. WEINHEIMER 001-011651 — LICENSED PROFESSIONAL ENGINEER

Drawing Title: EXISTING ELEVATIONS

Approved: Project Director

Project Title: VA Medical Center, Illiana Healthcare System, Demolish Buildings 12, 26, 40, and 74

Project Number: 550-11-116

Building Number: 12

Location: Danville, Indiana

Date: 2014-12-12 | Checked: DLW | Drawn: TKP

Drawing Number: AD-201
Dwg. 26 of 36

Office of Construction and Facilities Management

VA U.S. Department of Veterans Affairs

VA FORM 08-6231

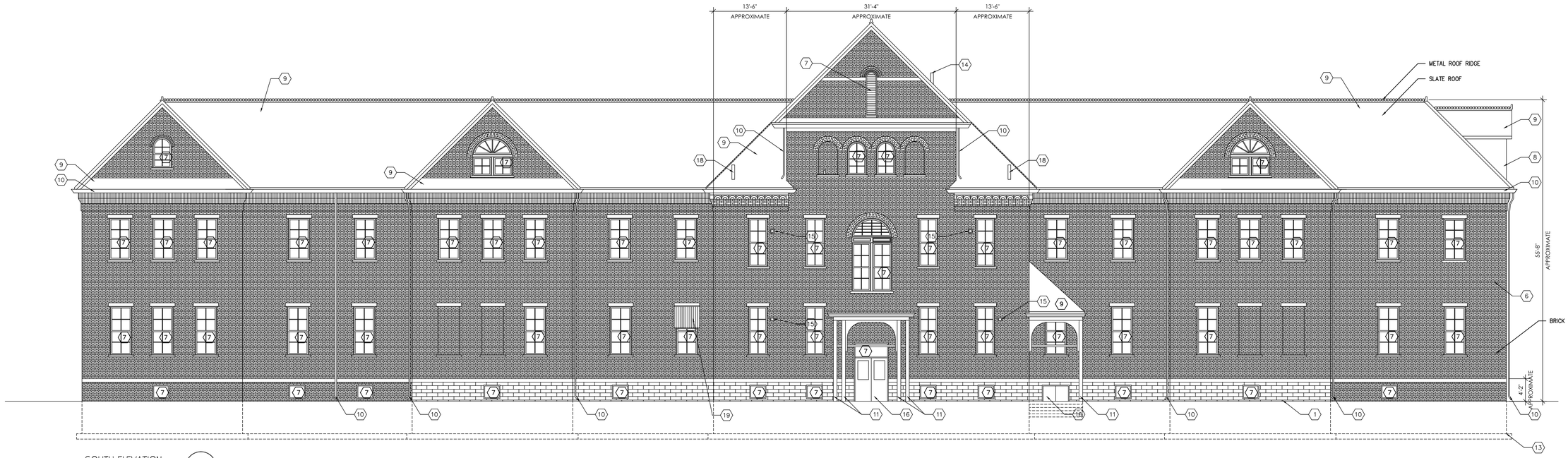

SOUTH ELEVATION (2 / AD-202)
SCALE: 1/8" = 1'-0"

EAST ELEVATION (1 / AD-202)
SCALE: 1/8" = 1'-0"

SHEET KEYNOTES

1. EXISTING BUILDING TO BE REMOVED
2. EXISTING CONNECTOR TO BE REMOVED.
3. PROTECT EXISTING BUILDING DURING DEMOLITION.
4. EXISTING RAILING SYSTEM TO BE REMOVED.
5. EXISTING RAMP SYSTEM TO BE REMOVED.
6. EXISTING WALL SYSTEM TO BE REMOVED.
7. EXISTING WINDOW SYSTEM TO BE REMOVED.
8. EXISTING DORMER SYSTEM TO BE REMOVED.
9. EXISTING ROOF SYSTEM TO BE REMOVED.
10. EXISTING ROOF DRAINAGE SYSTEM TO BE REMOVED.
11. EXISTING STRUCTURAL SYSTEM TO BE REMOVED.
12. EXISTING STAIR SYSTEM TO BE REMOVED.
13. EXISTING FOUNDATION SYSTEM TO BE REMOVED.
14. EXISTING MECHANICAL SYSTEM TO BE REMOVED.
15. EXISTING ELECTRICAL SYSTEM TO BE REMOVED.
16. EXISTING DOOR SYSTEM TO BE REMOVED.
17. EXISTING WINDOW SCREEN SYSTEM TO BE REMOVED.
18. EXISTING PLUMBING SYSTEM TO BE REMOVED.
19. EXISTING AWNING SYSTEM TO BE REMOVED.
20. EXISTING ELEVATOR SYSTEM TO BE REMOVED.
21. EXISTING CONCRETE SLAB TO BE REMOVED.
22. FIXTURES AND FITTINGS TO BE REMOVED.

GENERAL NOTES

- THE CONTRACTOR SHALL REVIEW THE DRAWINGS AND UNDERSTAND THE SCOPE OF THE DRAWINGS TO BE THE FOLLOWING: THESE DOCUMENTS (DRAWINGS, SPECIFICATIONS, ADDENDA,) ARE INTENDED TO INDICATE THE GENERAL SCOPE OF THE PROJECT IN TERMS OF MAJOR ELEMENTS AND SYSTEMS INCLUDING ARCHITECTURAL, STRUCTURAL, MECHANICAL, AND ELECTRICAL. THE DOCUMENTS DO NOT AND ARE NOT INTENDED TO INDICATE OR DESCRIBE IN DETAIL ALL THE NECESSARY WORK REQUIRED FOR FULL PERFORMANCE OF, AND COMPLETION OF THE REQUIREMENTS OF THE CONTRACT. ON THE BASIS OF THE GENERAL SCOPE AND DESIGN INTENT INDICATED IN THESE DOCUMENTS, THE CONTRACTOR SHALL FURNISH ALL ITEMS REQUIRED FOR THE PROPER EXECUTION AND COMPLETION OF THE WORK.
- FIELD VERIFY LOCATION OF CONSTRUCTION ELEMENTS, DOCUMENTS ARE REPRESENTATIVE TO CONVEY DESIGN INTENT AND ARE NOT AS–BUILT DRAWINGS.
- THE CONTRACTORS INVOLVED IN THIS PROJECT SHALL BE RESPONSIBLE FOR DESIGNING, INSTALLING, OR REMOVING THEIR RESPECTIVE WORK AND SYSTEMS TO MEET ALL APPLICABLE FEDERAL, STATE, AND LOCAL CODES, LAWS, SAFETY REGULATIONS, AND HAZARDOUS WASTE LAWS. THE CONTRACTOR SHALL FURNISH ALL NECESSARY PERMITS.
- COORDINATE WORK OF ALL TRADES PRIOR TO STARTING DEMOLITION OR CONSTRUCTION.
- UTILITY, ELECTRICAL, AND DATA SERVICE TO ADJACENT BUILDINGS TO REMAIN IN SERVICE. PROTECT AGAINST DAMAGE DURING DEMOLITION OR CONSTRUCTION WORK. PROMPTLY REPAIR DAMAGE TO SERVICES TO ADJACENT BUILDINGS CAUSED BY DEMOLITION AND CONSTRUCTION OPERATIONS.
- CAREFULLY CUT AND REMOVE PORTIONS OF WORK INDICATED TO BE DEMOLISHED SO AS NOT TO DISTURB ADJACENT AREAS OF CONSTRUCTION TO REMAIN. RESTORE AND REPAIR ANY AREAS DAMAGED IN THE COURSE OF DEMOLITION AND CONSTRUCTION.
- THE CONTRACTOR SHALL FURNISH PROTECTION TO PREVENT DAMAGE TO ANY EXISTING CONSTRUCTION, EQUIPMENT, AND MACHINERY.
- ALL WORK SHALL BE PERFORMED IN A SKILLED WORKMANSHIP TYPE AND MANNER ACCEPTABLE TO THE ARCHITECT AND OWNER.
- ALL DIMENSIONS ARE DIMENSIONED TO GRID LINE, FACE OF CONCRETE, FACE OF CMU, AND FACE OF METAL STUD, UNLESS NOTED OTHERWISE. ALL DIMENSIONS ARE ACTUAL AND NOT NOMINAL. REFER TO CIVIL DRAWINGS FOR EXTERIOR BUILDING DIMENSIONS. FIELD VERIFY ALL DIMENSIONS.
- DO NOT SCALE DRAWINGS. DIMENSIONS SHALL GOVERN EACH BUILDING COMPONENT LOCATION. BRING ANY DISCREPANCIES TO THE ARCHITECT'S ATTENTION IN WRITING IMMEDIATELY. OBTAIN CLARIFICATION PRIOR TO PROCEEDING WITH THE WORK.
- PROVIDE SHEET METAL OR FIRE RETARDANT WOOD BLOCKING IN WALL CAVITIES FOR ITEMS THAT ARE REQUIRED TO BE SECURED TO THE WALLS.
- CAULK INTERSECTION BETWEEN DIFFERENT MATERIALS.
- BUILDING FIRST FLOOR REFERENCE ELEVATION IS 100'–0". SEE CIVIL DRAWINGS FOR USGS ELEVATION.
- ALL DEBRIS FROM DEMOLITION WORK IS TO BE REMOVED FROM THE SITE. NO DEBRIS IS ALLOWED TO BE USED AS BACKFILL MATERIAL.
- DEFINITION OF SYSTEM TO MEAN ANY PART OR COMPONENT CONNECTED TO THAT ELEMENT OF THE BUILDING.
- THE FOLLOWING MATERIAL SHALL BE SALVAGED BY THE CONTRACTOR AND REMAIN THE PROPERTY OF THE OWNER: ROOFING SLATE, COPPER RIDGE CAPS, COPPER GUTTERS, AND COPPER DOWNSPOUTS. THE QUANTITY OF THE MATERIAL TO BE RETAINED IS TO BE DETERMINED BY VAIHCS. AT THE TIME OF THE DEMOLITION THE CONTRACTOR WILL PERFORM THE SALVAGE ACTIVITIES AND STORE THE MATERIALS IN BUILDING 67, AS WELL AS PROVIDING A COMPILED LOG OF THE ITEMS SALVAGED.

100% CONSTRUCTION DOCUMENTS

Revisions:	Date

CONSULTANTS:

Applied Engineering Services
9100 Keystone Crossing, Suite 200
Indianapolis, IN 46240

ARCHITECT/ENGINEERS:

AMERICAN STRUCTUREPOINT INC
7260 Shadeland Station | Indianapolis, Indiana 46256
TEL 317.547.5580 | FAX 317.543.0270
www.structurepoint.com

STATE OF ILLINOIS — DANIEL L WEINHEIMER 001-011551 — LICENSED ARCHITECT

Drawing Title: EXISTING ELEVATIONS

Approved: Project Director

Project Title: VA Medical Center, Illiana Healthcare System, Demolish Buildings 12, 26, 40, and 74

Location: Danville, Indiana

Date: 2014-12-12 | Checked: DLW | Drawn: TKP

Project Number: 550-11-116

Building Number: 12

Drawing Number: AD-202
Dwg. 27 of 36

Office of Construction and Facilities Management

VA U.S. Department of Veterans Affairs

VA FORM 08–6231

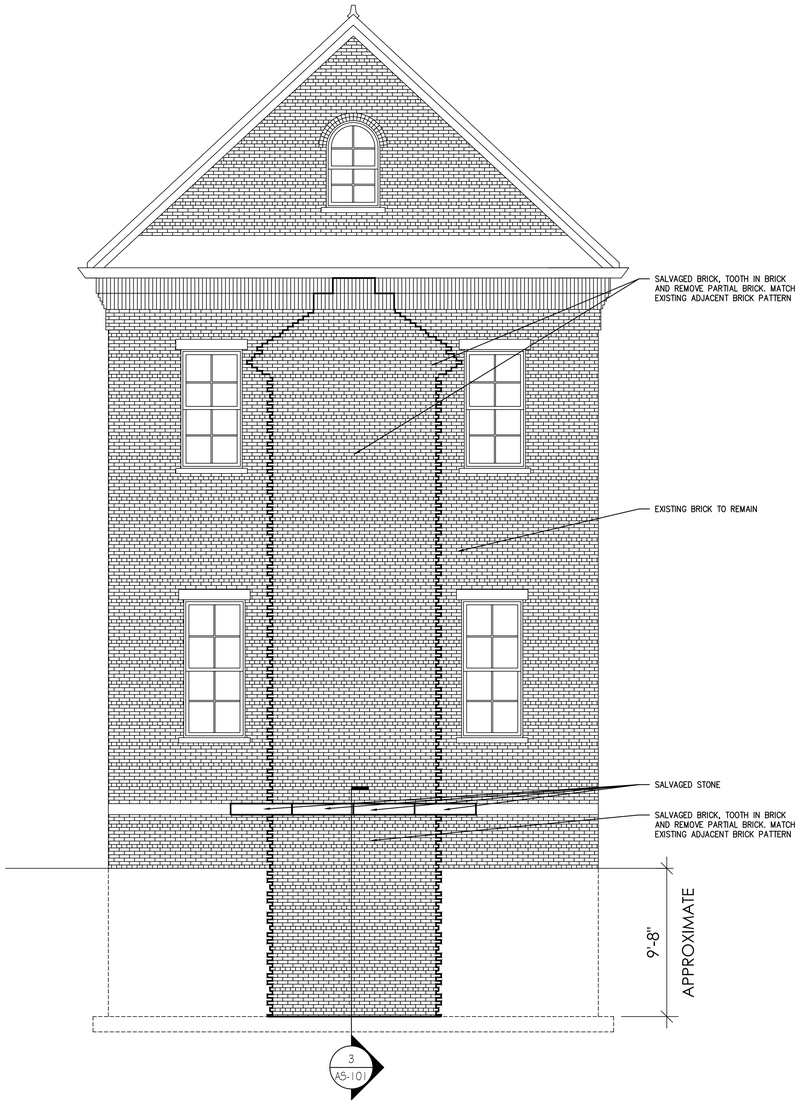

RENOVATED PARTIAL ELEVATION BLD. 11 (2 / AS-101)
SCALE: 1/8" = 1'-0"

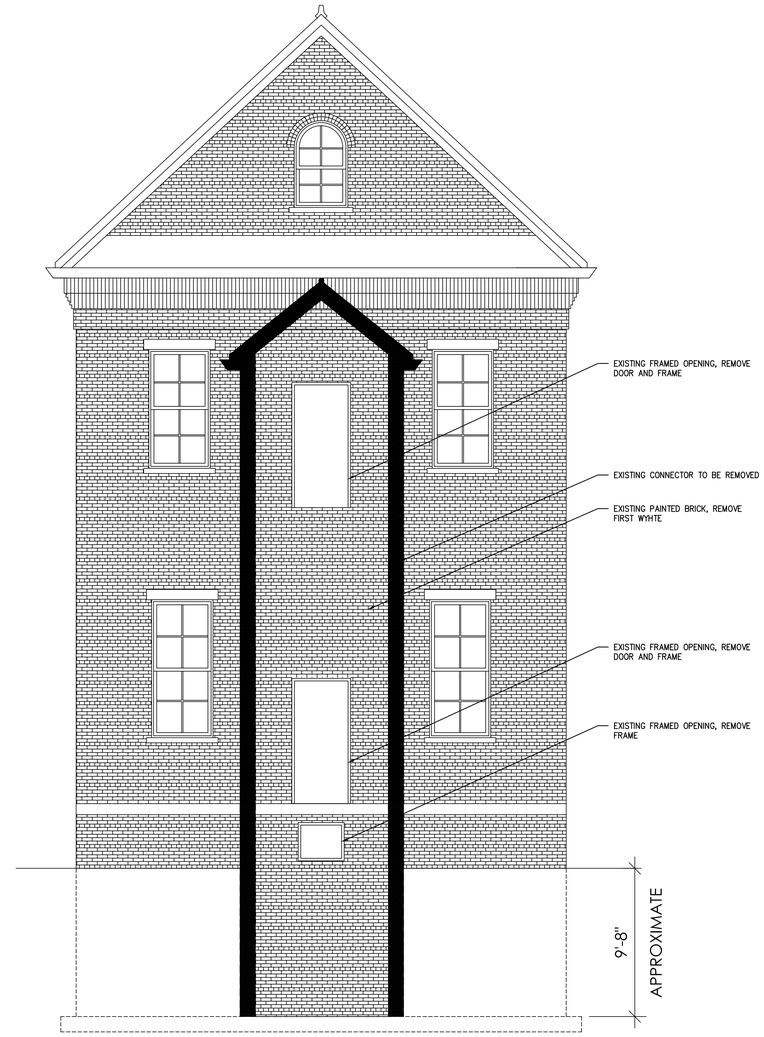

EXISTING PARTIAL ELEVATION BLD. 11 (1 / AS-101)
SCALE: 1/8" = 1'-0"

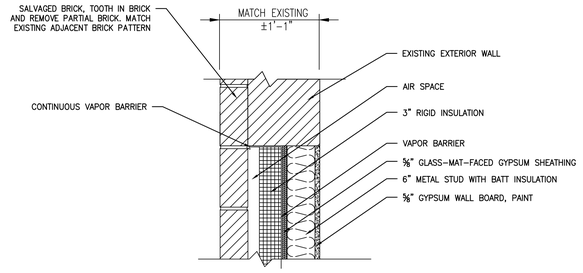

TYPICAL INFILL JAMB DETAIL (4 / A5-101)
SCALE: 1 1/2" = 1'-0"

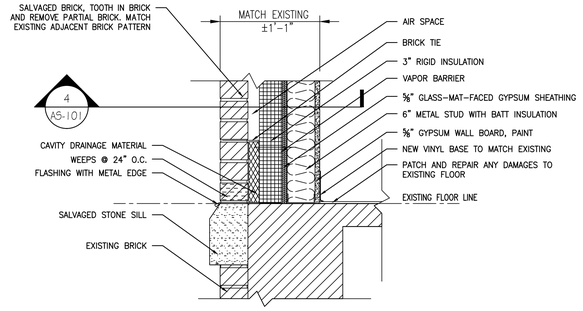

TYPICAL INFILL SILL DETAIL (3 / A5-101)
SCALE: 1 1/2" = 1'-0"

GENERAL NOTES

- THE CONTRACTOR SHALL REVIEW THE DRAWINGS AND UNDERSTAND THE SCOPE OF THE DRAWINGS TO BE THE FOLLOWING: THESE DOCUMENTS (DRAWINGS, SPECIFICATIONS, ADDENDA,) ARE INTENDED TO INDICATE THE GENERAL SCOPE OF THE PROJECT IN TERMS OF MAJOR ELEMENTS AND SYSTEMS INCLUDING ARCHITECTURAL, STRUCTURAL, MECHANICAL, AND ELECTRICAL. THE DOCUMENTS DO NOT AND ARE NOT INTENDED TO INDICATE OR DESCRIBE IN DETAIL ALL THE NECESSARY WORK REQUIRED FOR FULL PERFORMANCE OF, AND COMPLETION OF THE REQUIREMENTS OF THE CONTRACT. ON THE BASIS OF THE GENERAL SCOPE AND DESIGN INTENT INDICATED IN THESE DOCUMENTS, THE CONTRACTOR SHALL FURNISH ALL ITEMS REQUIRED FOR THE PROPER EXECUTION AND COMPLETION OF THE WORK.
- FIELD VERIFY LOCATION OF CONSTRUCTION ELEMENTS, DOCUMENTS ARE REPRESENTATIVE TO CONVEY DESIGN INTENT AND ARE NOT AS-BUILT DRAWINGS.
- THE CONTRACTORS INVOLVED IN THIS PROJECT SHALL BE RESPONSIBLE FOR DESIGNING, INSTALLING, OR REMOVING THEIR RESPECTIVE WORK AND SYSTEMS TO MEET ALL APPLICABLE FEDERAL, STATE, AND LOCAL CODES, LAWS, SAFETY REGULATIONS, AND HAZARDOUS WASTE LAWS. THE CONTRACTOR SHALL FURNISH ALL NECESSARY PERMITS.
- COORDINATE WORK OF ALL TRADES PRIOR TO STARTING DEMOLITION OR CONSTRUCTION.
- UTILITY, ELECTRICAL, AND DATA SERVICE TO ADJACENT BUILDINGS TO REMAIN IN SERVICE. PROTECT AGAINST DAMAGE DURING DEMOLITION OR CONSTRUCTION WORK. PROMPTLY REPAIR DAMAGE TO SERVICES TO ADJACENT BUILDINGS CAUSED BY DEMOLITION AND CONSTRUCTION OPERATIONS.
- CAREFULLY CUT AND REMOVE PORTIONS OF WORK INDICATED TO BE DEMOLISHED SO AS NOT TO DISTURB ADJACENT AREAS OF CONSTRUCTION TO REMAIN. RESTORE AND REPAIR ANY AREAS DAMAGED IN THE COURSE OF DEMOLITION AND CONSTRUCTION.
- THE CONTRACTOR SHALL FURNISH PROTECTION TO PREVENT DAMAGE TO ANY EXISTING CONSTRUCTION, EQUIPMENT, AND MACHINERY.
- ALL WORK SHALL BE PERFORMED IN A SKILLED WORKMANSHIP TYPE AND MANNER ACCEPTABLE TO THE ARCHITECT AND OWNER.
- ALL DIMENSIONS ARE DIMENSIONED TO GRID LINE, FACE OF CONCRETE, FACE OF CMU, AND FACE OF METAL STUD, UNLESS NOTED OTHERWISE. ALL DIMENSIONS ARE ACTUAL AND NOT NOMINAL. REFER TO CIVIL DRAWINGS FOR EXTERIOR BUILDING DIMENSIONS. FIELD VERIFY ALL DIMENSIONS.
- DO NOT SCALE DRAWINGS. DIMENSIONS SHALL GOVERN EACH BUILDING COMPONENT LOCATION. BRING ANY DISCREPANCIES TO THE ARCHITECT'S ATTENTION IN WRITING IMMEDIATELY. OBTAIN CLARIFICATION PRIOR TO PROCEEDING WITH THE WORK.
- PROVIDE SHEET METAL OR FIRE RETARDANT WOOD BLOCKING IN WALL CAVITIES FOR ITEMS THAT ARE REQUIRED TO BE SECURED TO THE WALLS.
- CAULK INTERSECTION BETWEEN DIFFERENT MATERIALS.
- BUILDING FIRST FLOOR REFERENCE ELEVATION IS 100'-0". SEE CIVIL DRAWINGS FOR USGS ELEVATION.
- ALL DEBRIS FROM DEMOLITION WORK IS TO BE REMOVED FROM THE SITE. NO DEBRIS IS ALLOWED TO BE USED AS BACKFILL MATERIAL.
- DEFINITION OF SYSTEM TO MEAN ANY PART OR COMPONENT CONNECTED TO THAT ELEMENT OF THE BUILDING.
- THE FOLLOWING MATERIAL SHALL BE SALVAGED BY THE CONTRACTOR AND REMAIN THE PROPERTY OF THE OWNER: ROOFING SLATE, COPPER RIDGE CAPS, COPPER GUTTERS, AND COPPER DOWNSPOUTS. THE QUANTITY OF THE MATERIAL TO BE RETAINED IS TO BE DETERMINED BY VAIHCS. AT THE TIME OF THE DEMOLITION THE CONTRACTOR WILL PERFORM THE SALVAGE ACTIVITIES AND STORE THE MATERIALS IN BUILDING 67, AS WELL AS PROVIDING A COMPILED LOG OF THE ITEMS SALVAGED.

100% CONSTRUCTION DOCUMENTS

Revisions:	Date

CONSULTANTS:

Applied Engineering Services
9100 Keystone Crossing, Suite 200
Indianapolis, IN 46240

ARCHITECT/ENGINEERS:

AMERICAN STRUCTUREPOINT INC.
7260 Shadeland Station | Indianapolis, Indiana 46256
TEL 317.547.5580 | FAX 317.543.0270
www.structurepoint.com

STATE OF ILLINOIS — DANIEL L. WEINHEIMER — 001-011851 — LICENSED PROFESSIONAL ENGINEER

Drawing Title: FACADE RENOVATION BUILDING 11	Project Title: VA Medical Center, Illiana Healthcare System, Demolish Buildings 12, 26, 40, and 74	Project Number: 550-11-116	Office of Construction and Facilities Management
Approved: Project Director	Location: Danville, Indiana	Building Number: 12	
	Date: 2014-12-12 / Checked: DLW / Drawn: TKP	Drawing Number: AS-101 Dwg. 28 of 36	VA U.S. Department of Veterans Affairs

VA FORM 08-6231

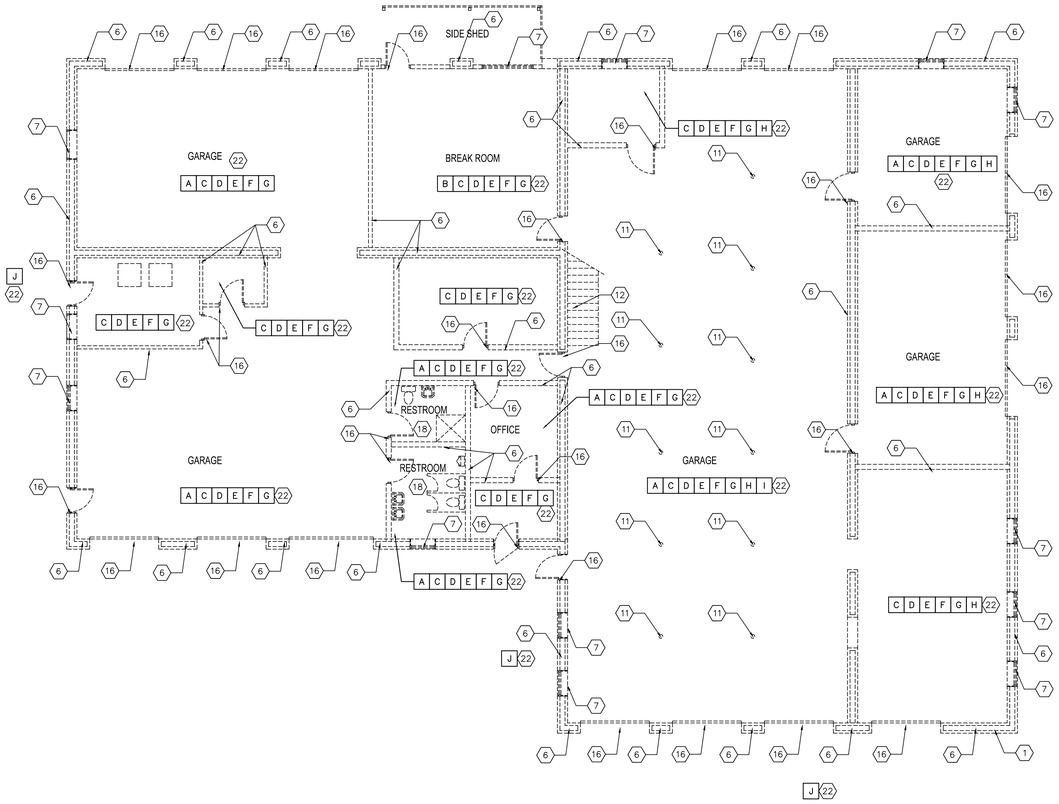

FIRST FLOOR PLAN (2 / AD-101)
SCALE: 1/8" = 1'-0"

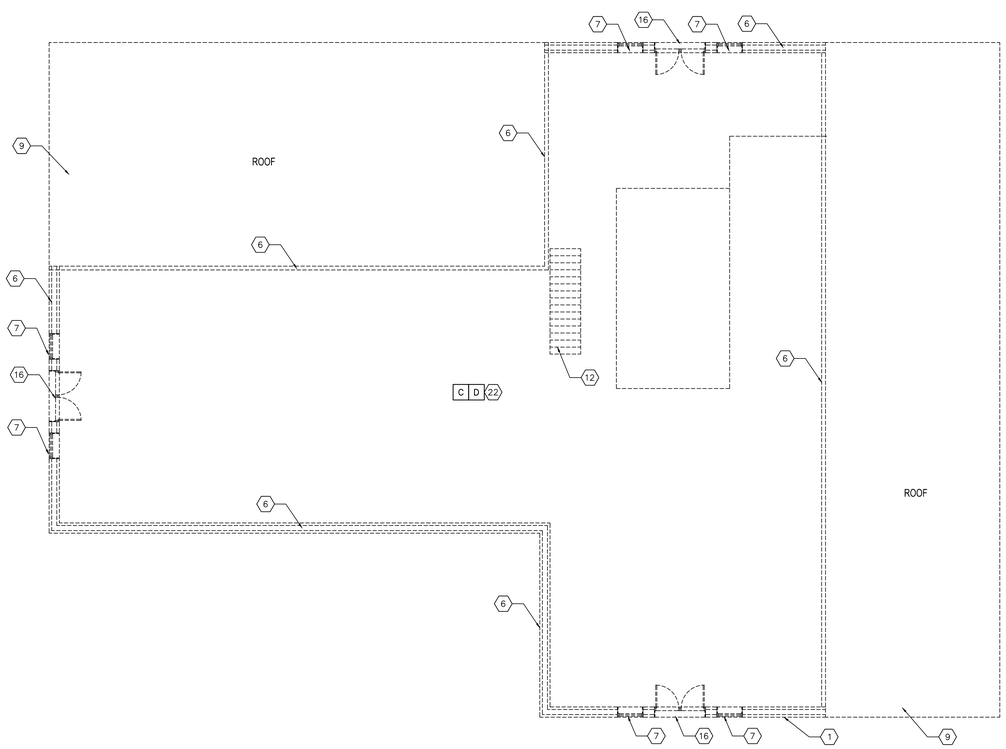

SECOND FLOOR PLAN (1 / AD-101)
SCALE: 1/8" = 1'-0"

REFERENCE ASBESTOS ABATEMENT SPECIFICATIONS FOR PROPER HANDLING OF ALL ASBESTOS–CONTAINING AND HAZARDOUS MATERIALS.

ASBESTOS ABATEMENT KEYNOTES, SCOPE OF REMOVAL:

A. PIPE INSULATION
B. FLOOR TILE/MASTIC
C. WINDOW GLAZING & CAULKING
D. FLUORESCENT TUBES AND BALLASTS
E. EXIT/EMERGENCY LIGHT BATTERIES
F. MERCURY THERMOSTAT
G. A/C WINDOW UNITS
H. ABANDONED CHEMICALS IN DRUMS/CANS
I. HYDRAULIC VEHICLE LIFT
J. UNDERGROUND FUEL TANKS (GAS & DIESEL)

SHEET KEYNOTES

1. EXISTING BUILDING TO BE REMOVED
2.
3.
4.
5.
6. EXISTING WALL SYSTEM TO BE REMOVED.
7. EXISTING WINDOW SYSTEM TO BE REMOVED.
8. EXISTING DORMER SYSTEM TO BE REMOVED.
9. EXISTING ROOF SYSTEM TO BE REMOVED.
10. EXISTING ROOF DRAINAGE SYSTEM TO BE REMOVED.
11. EXISTING STRUCTURAL SYSTEM TO BE REMOVED.
12. EXISTING STAIR SYSTEM TO BE REMOVED.
13. EXISTING FOUNDATION SYSTEM TO BE REMOVED.
14. EXISTING MECHANICAL SYSTEM TO BE REMOVED.
15. EXISTING ELECTRICAL SYSTEM TO BE REMOVED.
16. EXISTING DOOR SYSTEM TO BE REMOVED.
17.
18. EXISTING PLUMBING SYSTEM TO BE REMOVED.
19. EXISTING AWNING SYSTEM TO BE REMOVED.
20.
21. EXISTING CONCRETE SLAB TO BE REMOVED.
22. FIXTURES AND FITTINGS TO BE REMOVED.

GENERAL NOTES

- THE CONTRACTOR SHALL REVIEW THE DRAWINGS AND UNDERSTAND THE SCOPE OF THE DRAWINGS TO BE THE FOLLOWING: THESE DOCUMENTS (DRAWINGS, SPECIFICATIONS, ADDENDA.) ARE INTENDED TO INDICATE THE GENERAL SCOPE OF THE PROJECT IN TERMS OF MAJOR ELEMENTS AND SYSTEMS INCLUDING ARCHITECTURAL, STRUCTURAL, MECHANICAL, AND ELECTRICAL. THE DOCUMENTS DO NOT AND ARE NOT INTENDED TO INDICATE OR DESCRIBE IN DETAIL ALL THE NECESSARY WORK REQUIRED FOR FULL PERFORMANCE OF, AND COMPLETION OF THE REQUIREMENTS OF THE CONTRACT. ON THE BASIS OF THE GENERAL SCOPE AND DESIGN INTENT INDICATED IN THESE DOCUMENTS, THE CONTRACTOR SHALL FURNISH ALL ITEMS REQUIRED FOR THE PROPER EXECUTION AND COMPLETION OF THE WORK.
- FIELD VERIFY LOCATION OF CONSTRUCTION ELEMENTS, DOCUMENTS ARE REPRESENTATIVE TO CONVEY DESIGN INTENT AND ARE NOT AS–BUILT DRAWINGS.
- THE CONTRACTORS INVOLVED IN THIS PROJECT SHALL BE RESPONSIBLE FOR DESIGNING, INSTALLING, OR REMOVING THEIR RESPECTIVE WORK AND SYSTEMS TO MEET ALL APPLICABLE FEDERAL, STATE, AND LOCAL CODES, LAWS, SAFETY REGULATIONS, AND HAZARDOUS WASTE LAWS. THE CONTRACTOR SHALL FURNISH ALL NECESSARY PERMITS.
- COORDINATE WORK OF ALL TRADES PRIOR TO STARTING DEMOLITION OR CONSTRUCTION.
- UTILITY, ELECTRICAL, AND DATA SERVICE TO ADJACENT BUILDINGS TO REMAIN IN SERVICE. PROTECT AGAINST DAMAGE DURING DEMOLITION OR CONSTRUCTION WORK. PROMPTLY REPAIR DAMAGE TO SERVICES TO ADJACENT BUILDINGS CAUSED BY DEMOLITION AND CONSTRUCTION OPERATIONS.
- CAREFULLY CUT AND REMOVE PORTIONS OF WORK INDICATED TO BE DEMOLISHED SO AS NOT TO DISTURB ADJACENT AREAS OF CONSTRUCTION TO REMAIN. RESTORE AND REPAIR ANY AREAS DAMAGED IN THE COURSE OF DEMOLITION AND CONSTRUCTION.
- THE CONTRACTOR SHALL FURNISH PROTECTION TO PREVENT DAMAGE TO ANY EXISTING CONSTRUCTION, EQUIPMENT, AND MACHINERY.
- ALL WORK SHALL BE PERFORMED IN A SKILLED WORKMANSHIP TYPE AND MANNER ACCEPTABLE TO THE ARCHITECT AND OWNER.
- ALL DIMENSIONS ARE DIMENSIONED TO GRID LINE, FACE OF CONCRETE, FACE OF CMU, AND FACE OF METAL STUD, UNLESS NOTED OTHERWISE. ALL DIMENSIONS ARE ACTUAL AND NOT NOMINAL. REFER TO CIVIL DRAWINGS FOR EXTERIOR BUILDING DIMENSIONS. FIELD VERIFY ALL DIMENSIONS.
- DO NOT SCALE DRAWINGS. DIMENSIONS SHALL GOVERN EACH BUILDING COMPONENT LOCATION. BRING ANY DISCREPANCIES TO THE ARCHITECT'S ATTENTION IN WRITING IMMEDIATELY. OBTAIN CLARIFICATION PRIOR TO PROCEEDING WITH THE WORK.
- PROVIDE SHEET METAL OR FIRE RETARDANT WOOD BLOCKING IN WALL CAVITIES FOR ITEMS THAT ARE REQUIRED TO BE SECURED TO THE WALLS.
- CAULK INTERSECTION BETWEEN DIFFERENT MATERIALS.
- BUILDING FIRST FLOOR REFERENCE ELEVATION IS 100'–0". SEE CIVIL DRAWINGS FOR USGS ELEVATION.
- ALL DEBRIS FROM DEMOLITION WORK IS TO BE REMOVED FROM THE SITE. NO DEBRIS IS ALLOWED TO BE USED AS BACKFILL MATERIAL.
- DEFINITION OF SYSTEM TO MEAN ANY PART OR COMPONENT CONNECTED TO THAT ELEMENT OF THE BUILDING.
- THE FOLLOWING MATERIAL SHALL BE SALVAGED BY THE CONTRACTOR AND REMAIN THE PROPERTY OF THE OWNER: ROOFING SLATE, COPPER RIDGE CAPS, COPPER GUTTERS, AND COPPER DOWNSPOUTS. THE QUANTITY OF THE MATERIAL TO BE RETAINED IS TO BE DETERMINED BY VAIHCS. AT THE TIME OF THE DEMOLITION THE CONTRACTOR WILL PERFORM THE SALVAGE ACTIVITIES AND STORE THE MATERIALS IN BUILDING 67, AS WELL AS PROVIDING A COMPILED LOG OF THE ITEMS SALVAGED.

100% CONSTRUCTION DOCUMENTS

Revisions:	Date

CONSULTANTS:

Applied Engineering Services
9100 Keystone Crossing, Suite 200
Indianapolis, IN 46240

ARCHITECT/ENGINEERS:

AMERICAN STRUCTUREPOINT INC.
7260 Shadeland Station | Indianapolis, Indiana 46256
TEL 317.547.5580 | FAX 317.543.0270
www.structurepoint.com

STATE OF ILLINOIS — DANIEL L. WEINHEIMER 001-011651 — LICENSED PROFESSIONAL ENGINEER

Drawing Title: EXISTING FLOOR PLANS

Approved: Project Director

Project Title: VA Medical Center, Illiana Healthcare System, Demolish Buildings 12, 26, 40, and 74

Location: Danville, Indiana

Date: 2014-12-12 | Checked: DLW | Drawn: TKP

Project Number: 550-11-116

Building Number: 26

Drawing Number: AD-101

Dwg. 29 of 36

Office of Construction and Facilities Management

VA U.S. Department of Veterans Affairs

VA FORM 08-6231

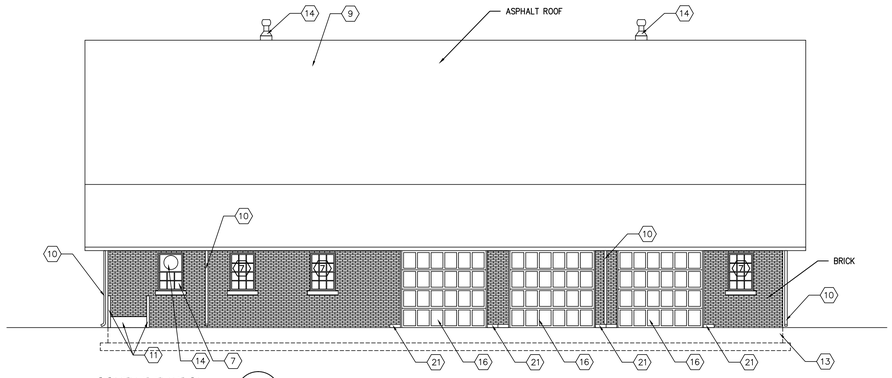

SOUTH ELEVATION 1 AD-201
SCALE: 1/8" = 1'-0"

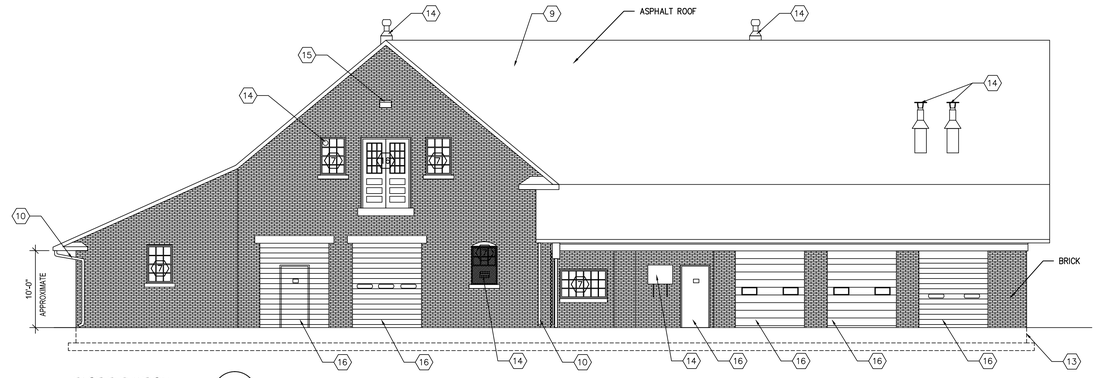

EAST ELEVATION 1 AD-201
SCALE: 1/8" = 1'-0"

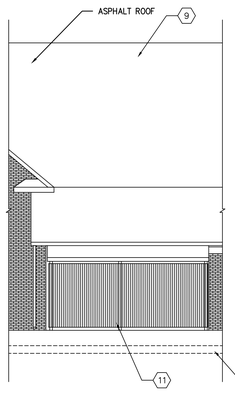

PARTIAL EAST ELEVATION 2 AD-201
SCALE: 1/8" = 1'-0"

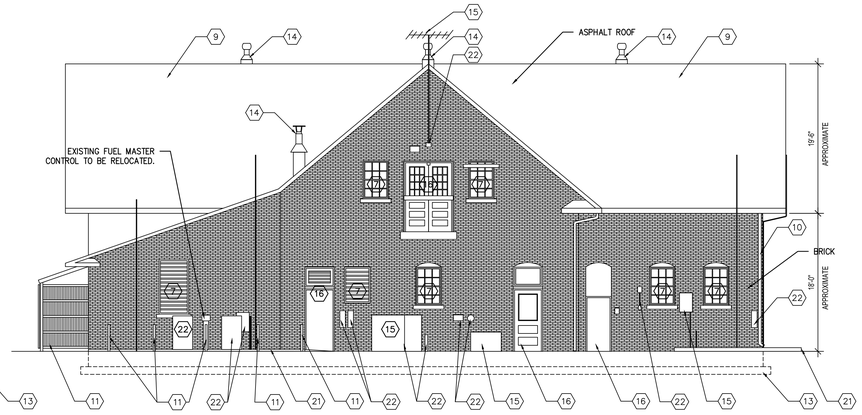

NORTH ELEVATION 2 AD-201
SCALE: 1/8" = 1'-0"

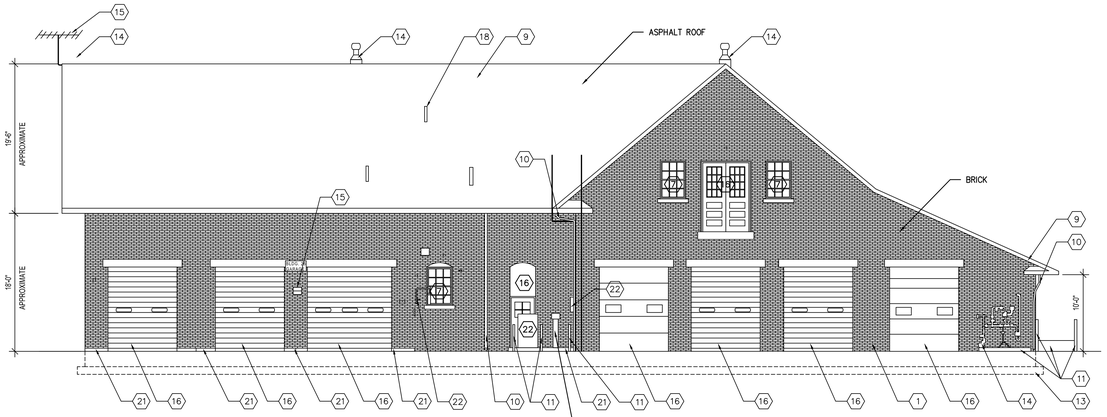

WEST ELEVATION 1 AD-201
SCALE: 1/8" = 1'-0"

SHEET KEYNOTES

1. EXISTING BUILDING TO BE REMOVED
2.
3.
4.
5.
6. EXISTING WALL SYSTEM TO BE REMOVED.
7. EXISTING WINDOW SYSTEM TO BE REMOVED.
8. EXISTING DORMER SYSTEM TO BE REMOVED.
9. EXISTING ROOF SYSTEM TO BE REMOVED.
10. EXISTING ROOF DRAINAGE SYSTEM TO BE REMOVED.
11. EXISTING STRUCTURAL SYSTEM TO BE REMOVED.
12. EXISTING STAIR SYSTEM TO BE REMOVED.
13. EXISTING FOUNDATION SYSTEM TO BE REMOVED.
14. EXISTING MECHANICAL SYSTEM TO BE REMOVED.
15. EXISTING ELECTRICAL SYSTEM TO BE REMOVED.
16. EXISTING DOOR SYSTEM TO BE REMOVED.
17.
18. EXISTING PLUMBING SYSTEM TO BE REMOVED.
19. EXISTING AWNING SYSTEM TO BE REMOVED.
20.
21. EXISTING CONCRETE SLAB TO BE REMOVED.
22. FIXTURES AND FITTINGS TO BE REMOVED.

GENERAL NOTES

- THE CONTRACTOR SHALL REVIEW THE DRAWINGS AND UNDERSTAND THE SCOPE OF THE DRAWINGS TO BE THE FOLLOWING: THESE DOCUMENTS (DRAWINGS, SPECIFICATIONS, ADDENDA,) ARE INTENDED TO INDICATE THE GENERAL SCOPE OF THE PROJECT IN TERMS OF MAJOR ELEMENTS AND SYSTEMS INCLUDING ARCHITECTURAL, STRUCTURAL, MECHANICAL, AND ELECTRICAL. THE DOCUMENTS DO NOT AND ARE NOT INTENDED TO INDICATE OR DESCRIBE IN DETAIL ALL THE NECESSARY WORK REQUIRED FOR FULL PERFORMANCE OF, AND COMPLETION OF THE REQUIREMENTS OF THE CONTRACT. ON THE BASIS OF THE GENERAL SCOPE AND DESIGN INTENT INDICATED IN THESE DOCUMENTS, THE CONTRACTOR SHALL FURNISH ALL ITEMS REQUIRED FOR THE PROPER EXECUTION AND COMPLETION OF THE WORK.
- FIELD VERIFY LOCATION OF CONSTRUCTION ELEMENTS, DOCUMENTS ARE REPRESENTATIVE TO CONVEY DESIGN INTENT AND ARE NOT AS–BUILT DRAWINGS.
- THE CONTRACTORS INVOLVED IN THIS PROJECT SHALL BE RESPONSIBLE FOR DESIGNING, INSTALLING, OR REMOVING THEIR RESPECTIVE WORK AND SYSTEMS TO MEET ALL APPLICABLE FEDERAL, STATE, AND LOCAL CODES, LAWS, SAFETY REGULATIONS, AND HAZARDOUS WASTE LAWS. THE CONTRACTOR SHALL FURNISH ALL NECESSARY PERMITS.
- COORDINATE WORK OF ALL TRADES PRIOR TO STARTING DEMOLITION OR CONSTRUCTION.
- UTILITY, ELECTRICAL, AND DATA SERVICE TO ADJACENT BUILDINGS TO REMAIN IN SERVICE. PROTECT AGAINST DAMAGE DURING DEMOLITION OR CONSTRUCTION WORK. PROMPTLY REPAIR DAMAGE TO SERVICES TO ADJACENT BUILDINGS CAUSED BY DEMOLITION AND CONSTRUCTION OPERATIONS.
- CAREFULLY CUT AND REMOVE PORTIONS OF WORK INDICATED TO BE DEMOLISHED SO AS NOT TO DISTURB ADJACENT AREAS OF CONSTRUCTION TO REMAIN. RESTORE AND REPAIR ANY AREAS DAMAGED IN THE COURSE OF DEMOLITION AND CONSTRUCTION.
- THE CONTRACTOR SHALL FURNISH PROTECTION TO PREVENT DAMAGE TO ANY EXISTING CONSTRUCTION, EQUIPMENT, AND MACHINERY.
- ALL WORK SHALL BE PERFORMED IN A SKILLED WORKMANSHIP TYPE AND MANNER ACCEPTABLE TO THE ARCHITECT AND OWNER.
- ALL DIMENSIONS ARE DIMENSIONED TO GRID LINE, FACE OF CONCRETE, FACE OF CMU, AND FACE OF METAL STUD, UNLESS NOTED OTHERWISE. ALL DIMENSIONS ARE ACTUAL AND NOT NOMINAL. REFER TO CIVIL DRAWINGS FOR EXTERIOR BUILDING DIMENSIONS. FIELD VERIFY ALL DIMENSIONS.
- DO NOT SCALE DRAWINGS. DIMENSIONS SHALL GOVERN EACH BUILDING COMPONENT LOCATION. BRING ANY DISCREPANCIES TO THE ARCHITECT'S ATTENTION IN WRITING IMMEDIATELY. OBTAIN CLARIFICATION PRIOR TO PROCEEDING WITH THE WORK.
- PROVIDE SHEET METAL OR FIRE RETARDANT WOOD BLOCKING IN WALL CAVITIES FOR ITEMS THAT ARE REQUIRED TO BE SECURED TO THE WALLS.
- CAULK INTERSECTION BETWEEN DIFFERENT MATERIALS.
- BUILDING FIRST FLOOR REFERENCE ELEVATION IS 100'–0". SEE CIVIL DRAWINGS FOR USGS ELEVATION.
- ALL DEBRIS FROM DEMOLITION WORK IS TO BE REMOVED FROM THE SITE. NO DEBRIS IS ALLOWED TO BE USED AS BACKFILL MATERIAL.
- DEFINITION OF SYSTEM TO MEAN ANY PART OR COMPONENT CONNECTED TO THAT ELEMENT OF THE BUILDING.
- THE FOLLOWING MATERIAL SHALL BE SALVAGED BY THE CONTRACTOR AND REMAIN THE PROPERTY OF THE OWNER: ROOFING SLATE, COPPER RIDGE CAPS, COPPER GUTTERS, AND COPPER DOWNSPOUTS. THE QUANTITY OF THE MATERIAL TO BE RETAINED IS TO BE DETERMINED BY VAIHCS. AT THE TIME OF THE DEMOLITION THE CONTRACTOR WILL PERFORM THE SALVAGE ACTIVITIES AND STORE THE MATERIALS IN BUILDING 67, AS WELL AS PROVIDING A COMPILED LOG OF THE ITEMS SALVAGED.

100% CONSTRUCTION DOCUMENTS

Revisions:	Date

CONSULTANTS:

Applied Engineering Services
9100 Keystone Crossing, Suite 200
Indianapolis, IN 46240

ARCHITECT/ENGINEERS:

AMERICAN STRUCTUREPOINT INC.
7260 Shadeland Station | Indianapolis, Indiana 46256
TEL 317.547.5580 | FAX 317.543.0270
www.structurepoint.com

STATE OF ILLINOIS — DANIEL L WEINHEIMER 001-011851 — LICENSED ARCHITECT

Drawing Title: EXISTING ELEVATIONS

Approved: Project Director

Project Title: VA Medical Center, Illiana Healthcare System, Demolish Buildings 12, 26, 40, and 74

Location: Danville, Indiana

Date: 2014-12-12 | Checked: DLW | Drawn: TKP

Project Number: 550-11-116

Building Number: 26

Drawing Number: AD-201

Dwg. 30 of 36

Office of Construction and Facilities Management

VA U.S. Department of Veterans Affairs

VA FORM 08–6231

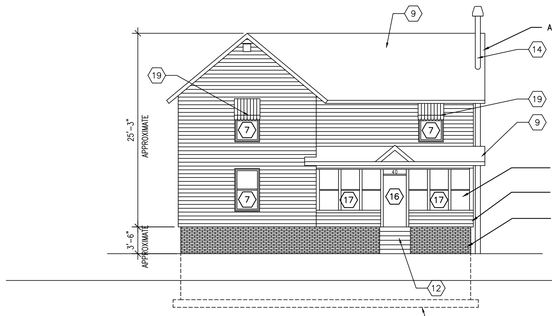

EAST ELEVATION 7 AD-101
SCALE: 1/8" = 1'-0"

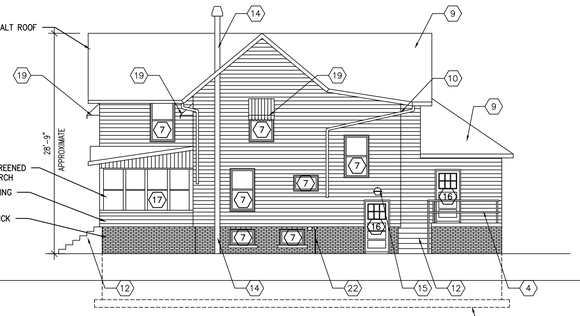

NORTH ELEVATION 6 AD-101
SCALE: 1/8" = 1'-0"

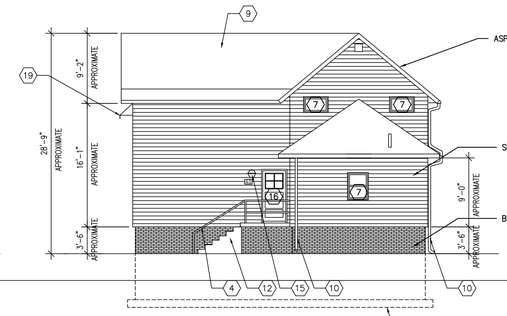

WEST ELEVATION 5 AD-101
SCALE: 1/8" = 1'-0"

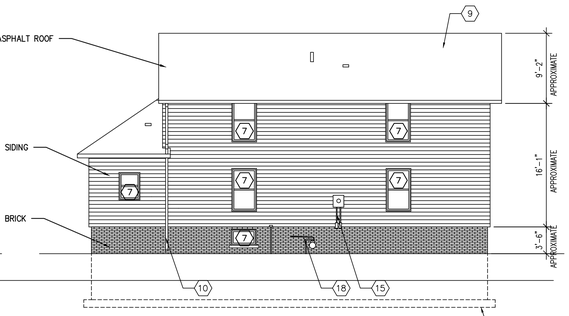

SOUTH ELEVATION 4 AD-101
SCALE: 1/8" = 1'-0"

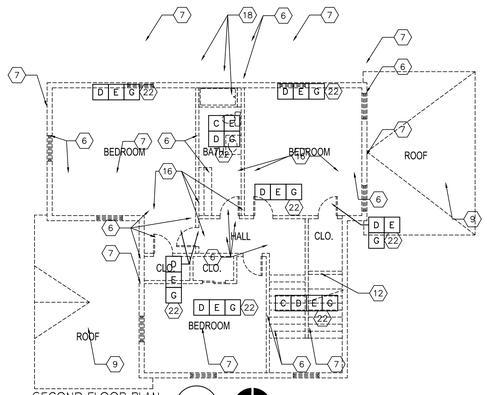

SECOND FLOOR PLAN 3 AD-101
SCALE: 1/8" = 1'-0"

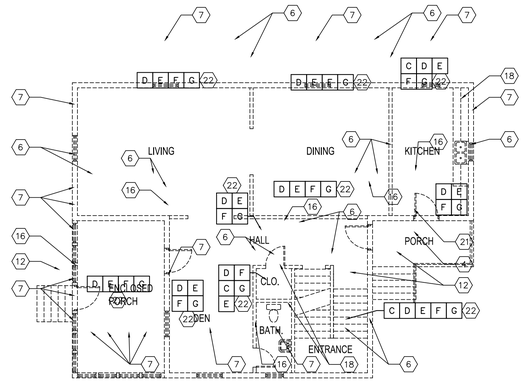

FIRST FLOOR PLAN 2 AD-101
SCALE: 1/8" = 1'-0"

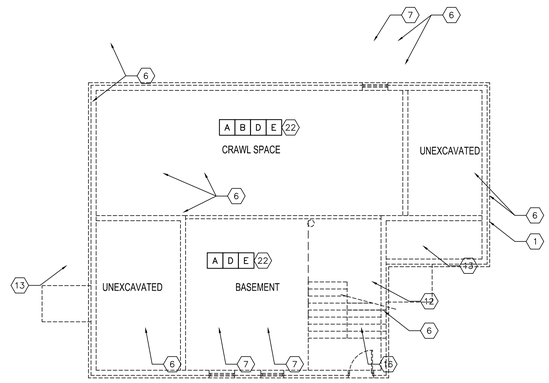

BASEMENT FLOOR PLAN 1 AD-101
SCALE: 1/8" = 1'-0"

REFERENCE ASBESTOS ABATEMENT SPECIFICATIONS FOR PROPER HANDLING OF ALL ASBESTOS–CONTAINING AND HAZARDOUS MATERIALS.

ASBESTOS ABATEMENT KEYNOTES, SCOPE OF REMOVAL:

A. PIPE INSULATION
B. ASBESTOS CONTAMINATED SOIL
C. FLOOR TILE/MASTIC
D. WINDOW GLAZING & CAULKING
E. FLUORESCENT TUBES AND BALLASTS
F. MERCURY THERMOSTAT
G. A/C WINDOW UNITS

SHEET KEYNOTES

1. EXISTING BUILDING TO BE REMOVED
2.
3.
4. EXISTING RAILING SYSTEM TO BE REMOVED.
5. EXISTING RAMP SYSTEM TO BE REMOVED.
6. EXISTING WALL SYSTEM TO BE REMOVED.
7. EXISTING WINDOW SYSTEM TO BE REMOVED.
8. EXISTING DORMER SYSTEM TO BE REMOVED.
9. EXISTING ROOF SYSTEM TO BE REMOVED.
10. EXISTING ROOF DRAINAGE SYSTEM TO BE REMOVED.
11. EXISTING STRUCTURAL SYSTEM TO BE REMOVED.
12. EXISTING STAIR SYSTEM TO BE REMOVED.
13. EXISTING FOUNDATION SYSTEM TO BE REMOVED.
14. EXISTING MECHANICAL SYSTEM TO BE REMOVED.
15. EXISTING ELECTRICAL SYSTEM TO BE REMOVED.
16. EXISTING DOOR SYSTEM TO BE REMOVED.
17. EXISTING WINDOW SCREEN SYSTEM TO BE REMOVED.
18. EXISTING PLUMBING SYSTEM TO BE REMOVED.
19. EXISTING AWNING SYSTEM TO BE REMOVED.
20.
21. EXISTING CONCRETE SLAB TO BE REMOVED.
22. FIXTURES AND FITTINGS TO BE REMOVED.

GENERAL NOTES

- THE CONTRACTOR SHALL REVIEW THE DRAWINGS AND UNDERSTAND THE SCOPE OF THE DRAWINGS TO BE THE FOLLOWING: THESE DOCUMENTS (DRAWINGS, SPECIFICATIONS, ADDENDA,) ARE INTENDED TO INDICATE THE GENERAL SCOPE OF THE PROJECT IN TERMS OF MAJOR ELEMENTS AND SYSTEMS INCLUDING ARCHITECTURAL, STRUCTURAL, MECHANICAL, AND ELECTRICAL. THE DOCUMENTS DO NOT AND ARE NOT INTENDED TO INDICATE OR DESCRIBE IN DETAIL ALL THE NECESSARY WORK REQUIRED FOR FULL PERFORMANCE OF, AND COMPLETION OF THE REQUIREMENTS OF THE CONTRACT. ON THE BASIS OF THE GENERAL SCOPE AND DESIGN INTENT INDICATED IN THESE DOCUMENTS, THE CONTRACTOR SHALL FURNISH ALL ITEMS REQUIRED FOR THE PROPER EXECUTION AND COMPLETION OF THE WORK.
- FIELD VERIFY LOCATION OF CONSTRUCTION ELEMENTS, DOCUMENTS ARE REPRESENTATIVE TO CONVEY DESIGN INTENT AND ARE NOT AS–BUILT DRAWINGS.
- THE CONTRACTORS INVOLVED IN THIS PROJECT SHALL BE RESPONSIBLE FOR DESIGNING, INSTALLING, OR REMOVING THEIR RESPECTIVE WORK AND SYSTEMS TO MEET ALL APPLICABLE FEDERAL, STATE, AND LOCAL CODES, LAWS, SAFETY REGULATIONS, AND HAZARDOUS WASTE LAWS. THE CONTRACTOR SHALL FURNISH ALL NECESSARY PERMITS.
- COORDINATE WORK OF ALL TRADES PRIOR TO STARTING DEMOLITION OR CONSTRUCTION.
- UTILITY, ELECTRICAL, AND DATA SERVICE TO ADJACENT BUILDINGS TO REMAIN IN SERVICE. PROTECT AGAINST DAMAGE DURING DEMOLITION OR CONSTRUCTION WORK. PROMPTLY REPAIR DAMAGE TO SERVICES TO ADJACENT BUILDINGS CAUSED BY DEMOLITION AND CONSTRUCTION OPERATIONS.
- CAREFULLY CUT AND REMOVE PORTIONS OF WORK INDICATED TO BE DEMOLISHED SO AS NOT TO DISTURB ADJACENT AREAS OF CONSTRUCTION TO REMAIN. RESTORE AND REPAIR ANY AREAS DAMAGED IN THE COURSE OF DEMOLITION AND CONSTRUCTION.
- THE CONTRACTOR SHALL FURNISH PROTECTION TO PREVENT DAMAGE TO ANY EXISTING CONSTRUCTION, EQUIPMENT, AND MACHINERY.
- ALL WORK SHALL BE PERFORMED IN A SKILLED WORKMANSHIP TYPE AND MANNER ACCEPTABLE TO THE ARCHITECT AND OWNER.
- ALL DIMENSIONS ARE DIMENSIONED TO GRID LINE, FACE OF CONCRETE, FACE OF CMU, AND FACE OF METAL STUD, UNLESS NOTED OTHERWISE. ALL DIMENSIONS ARE ACTUAL AND NOT NOMINAL. REFER TO CIVIL DRAWINGS FOR EXTERIOR BUILDING DIMENSIONS. FIELD VERIFY ALL DIMENSIONS.
- DO NOT SCALE DRAWINGS. DIMENSIONS SHALL GOVERN EACH BUILDING COMPONENT LOCATION. BRING ANY DISCREPANCIES TO THE ARCHITECT'S ATTENTION IN WRITING IMMEDIATELY. OBTAIN CLARIFICATION PRIOR TO PROCEEDING WITH THE WORK.
- PROVIDE SHEET METAL OR FIRE RETARDANT WOOD BLOCKING IN WALL CAVITIES FOR ITEMS THAT ARE REQUIRED TO BE SECURED TO THE WALLS.
- CAULK INTERSECTION BETWEEN DIFFERENT MATERIALS.
- BUILDING FIRST FLOOR REFERENCE ELEVATION IS 100'–0". SEE CIVIL DRAWINGS FOR USGS ELEVATION.
- ALL DEBRIS FROM DEMOLITION WORK IS TO BE REMOVED FROM THE SITE. NO DEBRIS IS ALLOWED TO BE USED AS BACKFILL MATERIAL.
- DEFINITION OF SYSTEM TO MEAN ANY PART OR COMPONENT CONNECTED TO THAT ELEMENT OF THE BUILDING.
- THE FOLLOWING MATERIAL SHALL BE SALVAGED BY THE CONTRACTOR AND REMAIN THE PROPERTY OF THE OWNER: ROOFING SLATE, COPPER RIDGE CAPS, COPPER GUTTERS, AND COPPER DOWNSPOUTS. THE QUANTITY OF THE MATERIAL TO BE RETAINED IS TO BE DETERMINED BY VAIHCS. AT THE TIME OF THE DEMOLITION THE CONTRACTOR WILL PERFORM THE SALVAGE ACTIVITIES AND STORE THE MATERIALS IN BUILDING 67, AS WELL AS PROVIDING A COMPILED LOG OF THE ITEMS SALVAGED.

100% CONSTRUCTION DOCUMENTS

Revisions	Date

CONSULTANTS:

Applied Engineering Services
9100 Keystone Crossing, Suite 200
Indianapolis, IN 46240

ARCHITECT/ENGINEERS:

AMERICAN STRUCTUREPOINT INC.
7260 Shadeland Station | Indianapolis, Indiana 46256
TEL 317.547.5580 | FAX 317.543.0270
www.structurepoint.com

STATE OF ILLINOIS — DANIEL L. WENNEMER 001-011851 — LICENSED PROFESSIONAL ENGINEER

Drawing Title: EXISTING PLANS AND ELEVATIONS

Approved: Project Director

Project Title: VA Medical Center, Illiana Healthcare System, Demolish Buildings 12, 26, 40, and 74

Location: Danville, Indiana

Date: 2014-12-12 | Checked: DLW | Drawn: TKP

Project Number: 550-11-116

Building Number: 40

Drawing Number: AD-101

Dwg. 31 of 36

Office of Construction and Facilities Management

VA U.S. Department of Veterans Affairs

VA FORM 08–6231

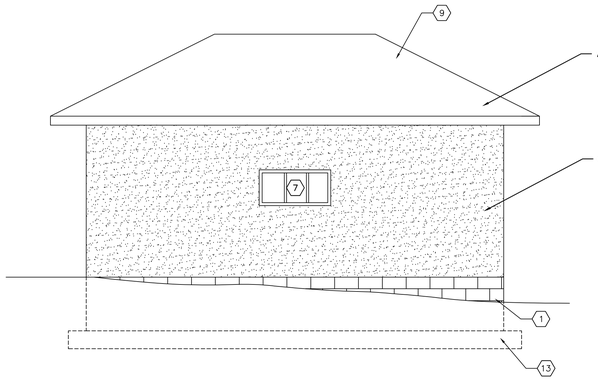

WEST ELEVATION 5 AD-101
SCALE: 1/8" = 1'-0"

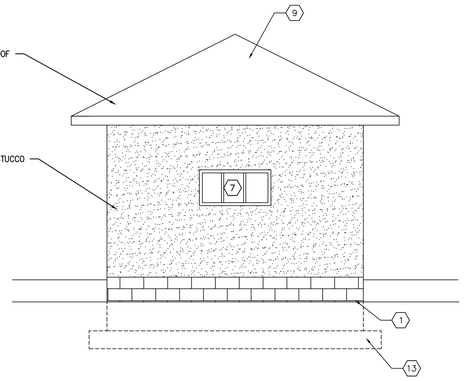

SOUTH ELEVATION 4 AD-101
SCALE: 1/8" = 1'-0"

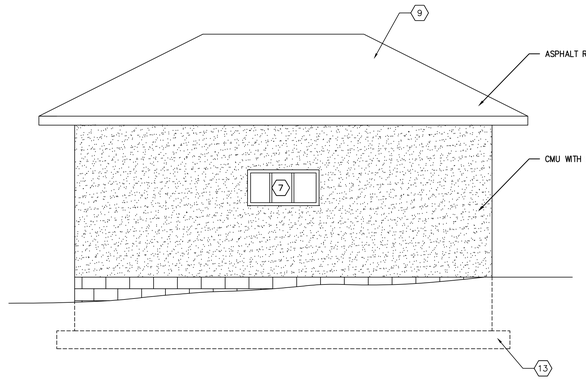

EAST ELEVATION 3 AD-101
SCALE: 1/8" = 1'-0"

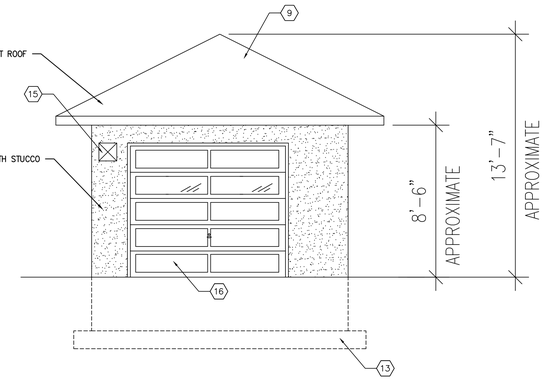

NORTH ELEVATION 2 AD-101
SCALE: 1/8" = 1'-0"

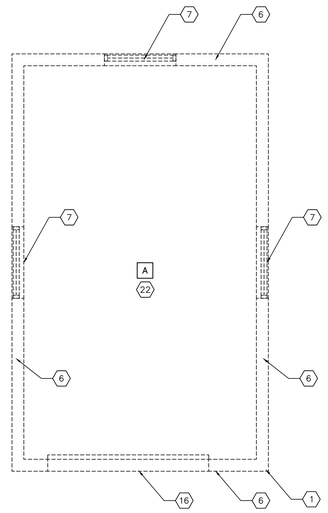

FIRST FLOOR PLAN 1 AD-101
SCALE: 1/8" = 1'-0"

N

REFERENCE ASBESTOS ABATEMENT SPECIFICATIONS FOR PROPER HANDLING OF ALL ASBESTOS–CONTAINING AND HAZARDOUS MATERIALS.

ASBESTOS ABATEMENT KEYNOTES, SCOPE OF REMOVAL:

A. WINDOW GLAZING & CAULKING

SHEET KEYNOTES

1. EXISTING BUILDING TO BE REMOVED
2.
3.
4.
5.
6. EXISTING WALL SYSTEM TO BE REMOVED.
7. EXISTING WINDOW SYSTEM TO BE REMOVED.
8.
9. EXISTING ROOF SYSTEM TO BE REMOVED.
10. EXISTING ROOF DRAINAGE SYSTEM TO BE REMOVED.
11. EXISTING STRUCTURAL SYSTEM TO BE REMOVED.
12. EXISTING STAIR SYSTEM TO BE REMOVED.
13. EXISTING FOUNDATION SYSTEM TO BE REMOVED.
14.
15. EXISTING ELECTRICAL SYSTEM TO BE REMOVED.
16. EXISTING DOOR SYSTEM TO BE REMOVED.
17.
18. EXISTING PLUMBING SYSTEM TO BE REMOVED.
19.
20.
21. EXISTING CONCRETE SLAB TO BE REMOVED.
22. FIXTURES AND FITTINGS TO BE REMOVED.

GENERAL NOTES

- THE CONTRACTOR SHALL REVIEW THE DRAWINGS AND UNDERSTAND THE SCOPE OF THE DRAWINGS TO BE THE FOLLOWING: THESE DOCUMENTS (DRAWINGS, SPECIFICATIONS, ADDENDA,) ARE INTENDED TO INDICATE THE GENERAL SCOPE OF THE PROJECT IN TERMS OF MAJOR ELEMENTS AND SYSTEMS INCLUDING ARCHITECTURAL, STRUCTURAL, MECHANICAL, AND ELECTRICAL. THE DOCUMENTS DO NOT AND ARE NOT INTENDED TO INDICATE OR DESCRIBE IN DETAIL ALL THE NECESSARY WORK REQUIRED FOR FULL PERFORMANCE OF, AND COMPLETION OF THE REQUIREMENTS OF THE CONTRACT. ON THE BASIS OF THE GENERAL SCOPE AND DESIGN INTENT INDICATED IN THESE DOCUMENTS, THE CONTRACTOR SHALL FURNISH ALL ITEMS REQUIRED FOR THE PROPER EXECUTION AND COMPLETION OF THE WORK.
- FIELD VERIFY LOCATION OF CONSTRUCTION ELEMENTS, DOCUMENTS ARE REPRESENTATIVE TO CONVEY DESIGN INTENT AND ARE NOT AS–BUILT DRAWINGS.
- THE CONTRACTORS INVOLVED IN THIS PROJECT SHALL BE RESPONSIBLE FOR DESIGNING, INSTALLING, OR REMOVING THEIR RESPECTIVE WORK AND SYSTEMS TO MEET ALL APPLICABLE FEDERAL, STATE, AND LOCAL CODES, LAWS, SAFETY REGULATIONS, AND HAZARDOUS WASTE LAWS. THE CONTRACTOR SHALL FURNISH ALL NECESSARY PERMITS.
- COORDINATE WORK OF ALL TRADES PRIOR TO STARTING DEMOLITION OR CONSTRUCTION.
- UTILITY, ELECTRICAL, AND DATA SERVICE TO ADJACENT BUILDINGS TO REMAIN IN SERVICE. PROTECT AGAINST DAMAGE DURING DEMOLITION OR CONSTRUCTION WORK. PROMPTLY REPAIR DAMAGE TO SERVICES TO ADJACENT BUILDINGS CAUSED BY DEMOLITION AND CONSTRUCTION OPERATIONS.
- CAREFULLY CUT AND REMOVE PORTIONS OF WORK INDICATED TO BE DEMOLISHED SO AS NOT TO DISTURB ADJACENT AREAS OF CONSTRUCTION TO REMAIN. RESTORE AND REPAIR ANY AREAS DAMAGED IN THE COURSE OF DEMOLITION AND CONSTRUCTION.
- THE CONTRACTOR SHALL FURNISH PROTECTION TO PREVENT DAMAGE TO ANY EXISTING CONSTRUCTION, EQUIPMENT, AND MACHINERY.
- ALL WORK SHALL BE PERFORMED IN A SKILLED WORKMANSHIP TYPE AND MANNER ACCEPTABLE TO THE ARCHITECT AND OWNER.
- ALL DIMENSIONS ARE DIMENSIONED TO GRID LINE, FACE OF CONCRETE, FACE OF CMU, AND FACE OF METAL STUD, UNLESS NOTED OTHERWISE. ALL DIMENSIONS ARE ACTUAL AND NOT NOMINAL. REFER TO CIVIL DRAWINGS FOR EXTERIOR BUILDING DIMENSIONS. FIELD VERIFY ALL DIMENSIONS.
- DO NOT SCALE DRAWINGS. DIMENSIONS SHALL GOVERN EACH BUILDING COMPONENT LOCATION. BRING ANY DISCREPANCIES TO THE ARCHITECT'S ATTENTION IN WRITING IMMEDIATELY. OBTAIN CLARIFICATION PRIOR TO PROCEEDING WITH THE WORK.
- PROVIDE SHEET METAL OR FIRE RETARDANT WOOD BLOCKING IN WALL CAVITIES FOR ITEMS THAT ARE REQUIRED TO BE SECURED TO THE WALLS.
- CAULK INTERSECTION BETWEEN DIFFERENT MATERIALS.
- BUILDING FIRST FLOOR REFERENCE ELEVATION IS 100'–0". SEE CIVIL DRAWINGS FOR USGS ELEVATION.
- ALL DEBRIS FROM DEMOLITION WORK IS TO BE REMOVED FROM THE SITE. NO DEBRIS IS ALLOWED TO BE USED AS BACKFILL MATERIAL.
- DEFINITION OF SYSTEM TO MEAN ANY PART OR COMPONENT CONNECTED TO THAT ELEMENT OF THE BUILDING.
- THE FOLLOWING MATERIAL SHALL BE SALVAGED BY THE CONTRACTOR AND REMAIN THE PROPERTY OF THE OWNER: ROOFING SLATE, COPPER RIDGE CAPS, COPPER GUTTERS, AND COPPER DOWNSPOUTS. THE QUANTITY OF THE MATERIAL TO BE RETAINED IS TO BE DETERMINED BY VAIHCS. AT THE TIME OF THE DEMOLITION THE CONTRACTOR WILL PERFORM THE SALVAGE ACTIVITIES AND STORE THE MATERIALS IN BUILDING 67, AS WELL AS PROVIDING A COMPILED LOG OF THE ITEMS SALVAGED.

100% CONSTRUCTION DOCUMENTS

Revisions:	Date

CONSULTANTS:

Applied Engineering Services
9100 Keystone Crossing, Suite 200
Indianapolis, IN 46240

ARCHITECT/ENGINEERS:

AMERICAN STRUCTUREPOINT INC.
7260 Shadeland Station | Indianapolis, Indiana 46256
TEL 317.547.5580 | FAX 317.543.0270
www.structurepoint.com

STATE OF ILLINOIS — DANIEL L. WEINHEIMER 001-011851 — LICENSED PROFESSIONAL ENGINEER

Drawing Title: EXISTING PLANS AND ELEVATIONS

Approved: Project Director

Project Title: VA Medical Center, Illiana Healthcare System, Demolish Buildings 12, 26, 40, and 74

Location: Danville, Indiana

Date: 2014-12-12 | Checked: DLW | Drawn: TKP

Project Number: 550-11-116

Building Number: 74

Drawing Number: AD-101
Dwg. 32 of 36

Office of Construction and Facilities Management

VA U.S. Department of Veterans Affairs

VA FORM 08-6231

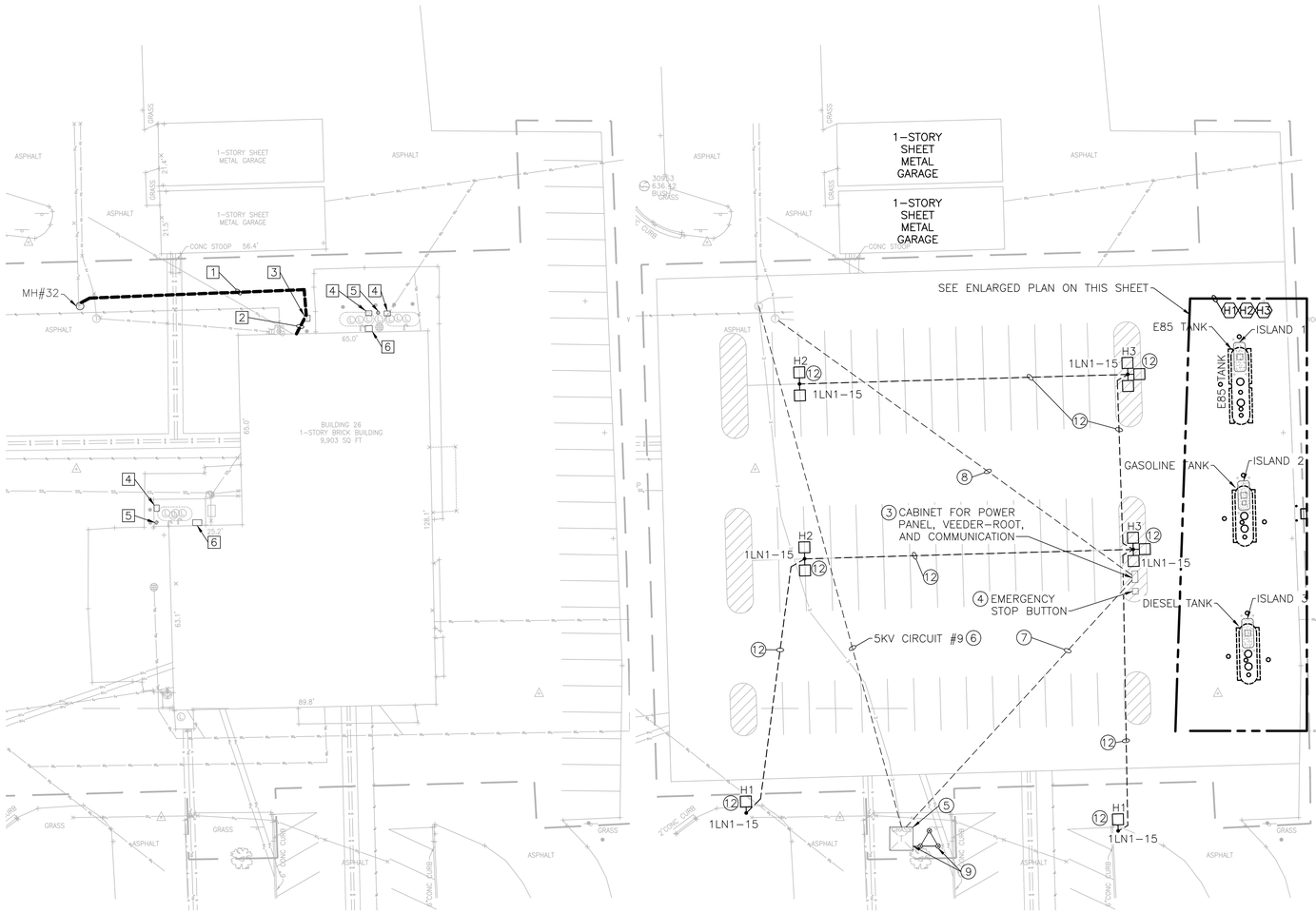

ELECTRICAL DEMOLITION SITE PLAN
SCALE: 1" = 20'-0"

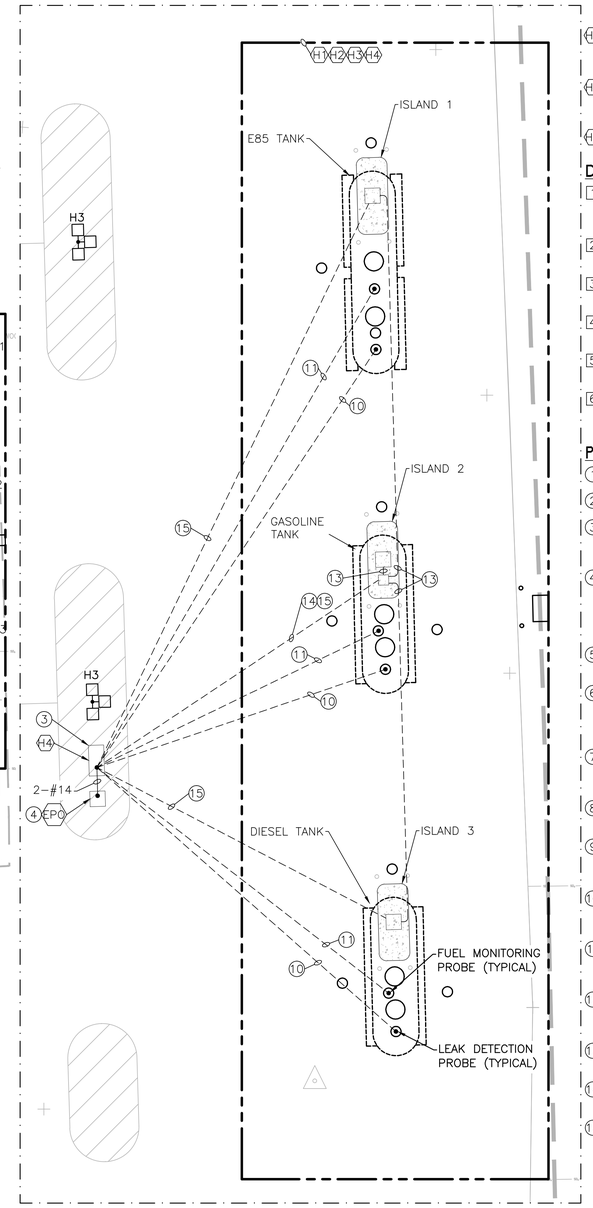

ENLARGED ELECTRICAL NEW SITE PLAN
SCALE: 1/8" = 1'-0"

HAZARDOUS LOCATION NOTES:

(H1) BOUNDARY OF HAZARDOUS LOCATION EXTENDS 20' HORIZONTALLY TO 18" ABOVE FINISHED SURFACE. ELECTRICAL DEVICES SHALL BE LOCATED OUTSIDE THIS ZONE.

(H2) BOUNDARY OF HAZARDOUS LOCATION AREA EXTENDS 10' HORIZONTALLY TO HEIGHT OF FUEL VENTS. ELECTRICAL DEVICES SHALL BE LOCATED OUTSIDE THIS ZONE.

(H3) ALL CONDUITS ENTERING HAZARDOUS ZONE SHALL BE GRS CONDUIT TO MEET NEC HAZARDOUS LOCATION REQUIREMENTS. PVC MAY BE USED WHERE BURIED A MINIMUM OF 30" BELOW FINISHED GRADE.

(H4) SEAL ALL CONDUITS AT BOTH ENDS.

DEMOLITION NOTES:

1 DISCONNECT AND REMOVE 4160V CABLES FROM MH#32 TO EXISTING TRANSFORMER. COORDINATE WORK IN MH#32 WITH VA. EXISTING CIRCUIT #9 FEEDS MULTIPLE BUILDINGS.

2 DISCONNECT AND REMOVE 120/208V CABLES FROM TRANSFORMER TO DISTRIBUTION PANEL IN BUILDING.

3 REMOVE AND RELOCATE EXISTING 75KVA TRANSFORMER AS PER NEW PLAN.

4 DISCONNECT AND RELOCATE FUEL DISPENSING PUMPS. TOTAL OF THREE (3).

5 DISCONNECT AND REMOVE TWO (2) FUEL MASTER FUELING SYSTEMS. RE-USE ONE (1) AS PER NEW PLAN.

6 DISCONNECT AND REMOVE TWO (2) VEEDER-ROOT SYSTEM CABINETS. RE-USE ONE (1) PER NEW PLAN.

PLAN NOTES:

(1) NEW LOCATION OF DISPENSER PUMPS.

(2) NEW LOCATION OF FUEL MASTER FUELING SYSTEM.

(3) NEW NEMA-3R CABINET TO HOUSE 120/208V PANELBOARD, CONTACTOR, DATA/PHONE EQUIPMENT/TERMINATION, AND VEEDER-ROOT SYSTEM CONTROLLER.

(4) EMERGENCY DISCONNECT FOR FUEL PUMPING. RED MUSHROOM MOMENTARY PUSH BUTTON (EPO) IN NEMA-4 ENCLOSURE WITH PERMANENT PAINTED ALUMINUM SIGN READING "EMERGENCY DISCONNECT" IN RED 1-1/2" LETTERS AS REQUIRED BY NEC-514-5(a). REFER TO DETAIL 'A' ON SHEET 26-E-501. MOUNT ON 4" POST @ 48" AFF.

(5) NEW LOCATION OF THE EXISTING 75KVA TRANSFORMER, MOUNT ON 6" THICK CONCRETE PAD.

(6) PROVIDE NEW 5KV, 3-#4/0, #6 GND IN 5" PVC CONDUIT FROM TRANSFORMER TO MH#32. TERMINATE AT TRANSFORMER HV TERMINAL. COORDINATE CONNECTION TO EXISTING FEEDER #9 IN MH#32 WITH VA. CONTRACTOR TO PROVIDE TERMINATION KIT AT BOTH LOCATIONS.

(7) PROVIDE 120/208VAC FEEDER IN 3" PVC CONDUIT FROM SECONDARY OF TRANSFORMER TO PANELBOARD IN CABINET. REFER TO POWER SCHEMATIC ON SHEET 26-E-101.

(8) PROVIDE TWO (2) CATAGORY-6 CABLES FROM COMMUNICATIONS MANHOLE TO CABINET.

(9) PROVIDE 3/4"øx10'-0"L COPPER-CLAD GROUND ROD. DRIVE IN GROUND AND CONNECT WITH #2/0 COPPER GROUND CABLE TO EACH GROUND ROD AND LUG AT TRANSFORMER LOCATION.

(10) PROVIDE 3/4"C, WITH LEAK DETECTOR, WATER DETECTION AND OTHER PROBE WIRING/CABLES TO VEEDER-ROOT SYSTEM. USE TWO (2) WIRE SHIELDED CABLES AS RECOMMENDED BY VEEDER-ROOT MANUFACTURER.

(11) PROVIDE 3/4"C WITH FUEL LEVEL HIGH/LOW MONITORING PROBE WIRING/CABLES TO VEEDER-ROOT SYSTEM. USE TWO (2) WIRE SHIELDED CABLES AS RECOMMENDED BY VEEDER-ROOT MANUFACTURER.

(12) NEW POLE LIGHT WITH POLE BASE, PROVIDE PHOTOCELL AT FIRST POLE AND CONNECT ALL LIGHTS TO CIRCUIT SHOWN. CONNECT WITH 3/4"C, 2-#10, #10 GND. ALSO PROVIDE GROUNDING AS PER SPECIFICATIONS.

(13) CONDUITS, CONTROL CABLES FROM FUEL MASTER SYSTEM TO EACH FUEL DISPENSER PUMPS.

(14) COMMUNICATION CABLE CONDUIT FROM FUEL MASTER STATION TO POWER AND DATA IN CABINET.

(15) FEEDER CONDUIT FOR PUMP POWER.

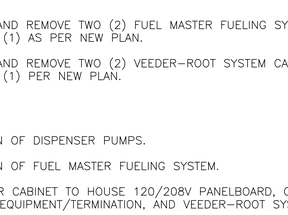

KEY PLAN
SCALE: NONE

LIGHTING FIXTURE SCHEDULE

TYPE	DESCRIPTION	MOUNTING	LAMPS/FIXTURE QTY	LAMPS/FIXTURE TYPE	VOLT	MANUFACTURERS	WATTS/FIX	NOTES
H1	POLE MOUNT LIGHT - SINGLE FIXTURE						143	
	DIE-CAST ALUMINUM HOUSING AND DOOR FRAME WITH TEMPERED GLASS, STAINLESS STEEL DOOR HINGE, LATCH AND FASTNERS, SILICON GASKETING, SEALED OPTIC CHAMBER, SOLID STATE DRIVER, ARM MOUNT ON ROUND POLE, LENSES FOR EFFICIENT PERFORMANCE, PRECISION OPTIC, TYPE III DISTRIBUTION, DUAL CIRCUIT LED BANKS, IP66, FULL CUT-OFF AND IDA COMPLIANCE, POLYESTER POWDERCOAT FINISH. COLOR SELECTED BY ARCHITECT. TAPERED ONE-PIECE EXTRUDED ALUMINUM 30' LONG SHAFT, SHAFT DIAMETER IS BASED ON EPA AND SPECIFICATION WITH FIXTURE MOUNTING BRACKETS.	FOUNDATION MOUNTING		LED, 11000 LUMENS, 5000K	120 V	KIM, EMCO, McGRAW, LITHONIA DSX1-LED		
H2	POLE MOUNT LIGHT						143	
	SAME AS H1 , EXCEPT TWO LIGHTS	FOUNDATION MOUNTING		LED, 11000 LUMENS, 5000K	120 V	KIM, EMCO, McGRAW, LITHONIA DSX1-LED		
H3	POLE MOUNT LIGHT.						143	
	SAME AS H1 , EXCEPT THREE LIGHTS	FOUNDATION MOUNTING		LED, 11000 LUMENS, 5000K	120 V	KIM, EMCO, McGRAW, LITHONIA DSX1-LED		

100% CONSTRUCTION DOCUMENTS

Revisions:	Date
UPDATED	6/2/14
UPDATED	4/17/13

VA FORM 08-6231

CONSULTANTS:

Applied Engineering Services
9100 Keystone Crossing, Suite 200
Indianapolis, IN 46240

FRANCIS L. ST. JOHN 082-049008 REGISTERED PROFESSIONAL ENGINEER STATE OF INDIANA
7/31/14

ARCHITECT/ENGINEERS:

AMERICAN STRUCTUREPOINT INC.
7260 Shadeland Station | Indianapolis, Indiana 46256
TEL 317.547.5580 | FAX 317.543.0270
www.structurepoint.com

Applied Engineering Services
9100 Keystone Crossing, Suite 200
Indianapolis, IN 46240
Tele: (317) 810-4141 | Fax: (317) 810-4140
www.applied-e-s.com

Drawing Title: ELECTRICAL SITE PLAN

Approved: Project Director

Project Title: VA Medical Center, Illiana Healthcare System, Demolish Buildings 12, 26, 40, and 74

Location: Danville, Illinois

Date: 2014-12-12 | Checked: RAP | Drawn: MDJ

Project Number: 550-11-116

Building Number: 12

Drawing Number: 26-E-101

Dwg. 33 of 36

Office of Construction and Facilities Management

VA U.S. Department of Veterans Affairs

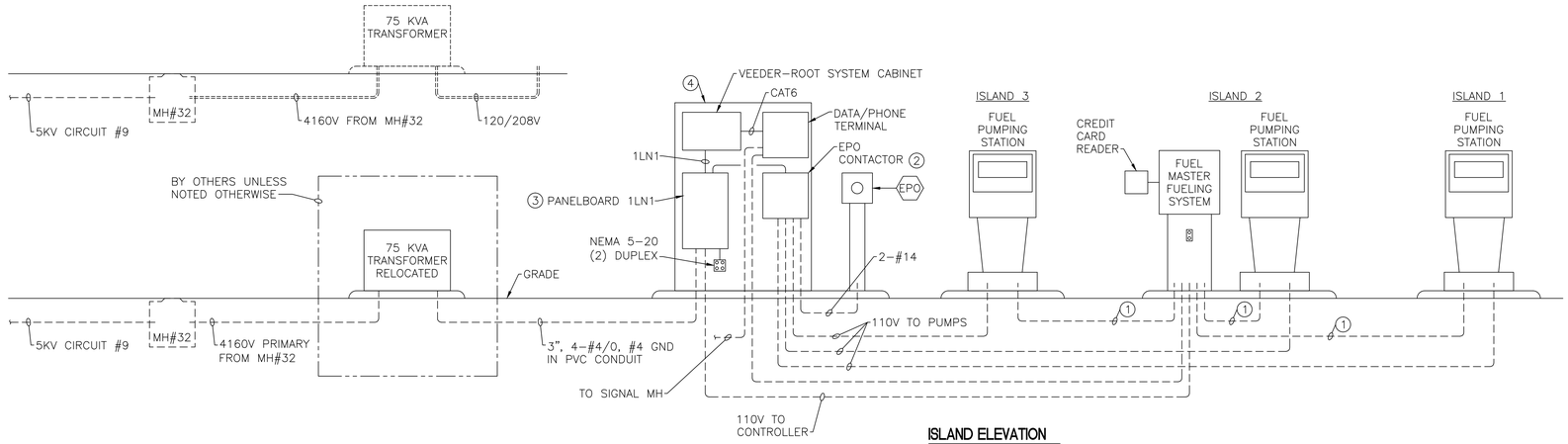

ISLAND ELEVATION

SCALE: NONE

PLAN NOTES:

1. PROVIDE THE FOLLOWING CONTROL CABLES FROM FUEL MASTER CONTROLLER TO EACH FUEL PUMPING STATIONS. ROUTE CABLE IN 1" THREADED RIGID CONDUIT, SEAL CONDUIT AT BOTH ENDS.
   - 3-#12 AWG, STRANDED FOR SOLENOID CONTROL
   - 3-#18 AWG, SHIELDED FOR PULSER CONTROL
   - COMMUNICATIONS CABLE (SHIELDED; 3-#14 AWG) TO COMMUNICATE WITH MASTER UNIT.
2. PROVIDE 40A, 6-POLE CONTACTOR WITH HAND-OFF-AUTO SELECTOR, 120VAC COIL AND PILOT LIGHT.
3. PROVIDE 225A, 120/208V, 3P, 4W PANELBOARD AS PER SCHEDULE AND SPECIFICATION.
4. TWO-DOOR, FREE STANDING, NEMA 4X ENCLOSURE, FIBERGLASS REINFORCED POLYESTER MATERIAL, ALL SEAMS ARE SEALED, 3-POINT LATCHING SYSTEM, STAINLESS STEEL POWERGLIDE HANDLE ON HANDLE, LOCKABLE, STAINLESS STEEL HARDWARE, SEAMLESS FORM-IN-PLACE GASKET, COATED AND DUCT-TIGHT SEAL, PAINTED STEEL TOP, BOTTOM, AND SIDE, SOLID CENTER POST, CORROSION-RESISTENT FIBERGLASS HINGE WITH STAINLESS STEEL PIN, GRAY FINISH.

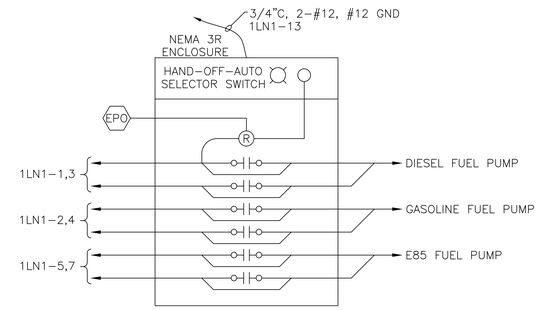

EPO CONTACTOR DETAIL (A)

SCALE: NONE

GENERAL SYMBOLS:

- NEW
- EXISTING
- DEMOLITION
- FUTURE
- POINT OF CONNECTION
- POINT OF REMOVAL
- PLAN NOTE
- 1 DEMOLITION NOTE
- DETAIL OR SECTION MARKER

ELECTRICAL SYMBOLS:

- CONDUIT CONCEALED IN WALL OR IN CEILING.
- CONDUIT CONCEALED UNDER FLOOR OR BELOW GRADE.
- CONDUIT EXPOSED.
- UNDERGROUND CONDUIT STUBBED OUT 5'-0" FROM BUILDING OR WALKWAY LINE, CAPPED AND MARKED.
- LIGHT FIXTURE, POLE MOUNTED

ELECTRICAL ABBREVIATIONS:

#/C	MULTI-CONDUCTOR CABLE
1/C	SINGLE CONDUCTOR CABLE
20AF	20 AMP FUSES
3P	3 POLE
A, AMP	AMPERE
ACCU	AIR COOLED CONDENSING UNIT
AFF	ABOVE FINISHED FLOOR. MOUNTING HEIGHTS FROM FINISHED FLOOR TO TOP OF BOX.
AHU	AIR HANDLING UNIT
CH	CABINET HEATER
E	EXISTING EQUIPMENT TO BE REUSED
EF	EXHAUST FAN
FCU	FAN COIL UNIT
GFI	GROUND FAULT INTERRUPTER
GND	GROUND
HP	HORSEPOWER
IG	ISOLATED GROUND
KVA	KILOVOLT AMPERES
KW	KILOWATT
NL	NIGHT LIGHT ON UNSWITCHED CIRCUIT
OL	OVERLOAD
PROVIDE	FURNISH, INSTALL AND CONNECT.
RTU	ROOF TOP UNIT
UH	UNIT HEATER
UON	UNLESS OTHERWISE NOTED
V	VOLTS
WC	WATER COOLER
WG	WIRE GUARD
WP	WEATHERPROOF

PANEL SCHEDULE

PANEL NAME: 1LN1	LOCATION: EXTERIOR CABINET
VOLTAGE: 120/208 VOLT, 3 PH, 4 WIRE	MOUNTING: WALL
RATING: 225 AMP, MAIN	KAIC RATING: 22
ENCLOSURE: NEMA 1	GROUND BUSS: YES
	FEED FROM: 75 KVA TRANSFORMER

CKT	DESCRIPTION	BREAKER P	BREAKER TRIP	LOAD IN KVA LTS	RECP	MISC	"A"	"B"	"C"	LOAD IN KVA LTS	RECP	MISC	BREAKER P	BREAKER TRIP	DESCRIPTION	CKT
1	Diesel Fuel Pump	2	20			0.5	1.0					0.5	2	20	Gasoline Fuel Pump	2
3						0.5		1.0				0.5				4
5	E 85 Fuel Pump	2	20			0.5			1.0			0.5	1	20	Veeder-Root System	6
7						0.5	0.9				0.4		1	20	Receptacle in Cab	8
9	Fuel Master Fueling System	1	20			0.5		1.0				0.5	1	20	Credit Card	10
11	Parking Lot lights	1	20	0.5					1.0	0.5			1	20	Parking Lot Lights	12
13	EPO Contactor	1	20			0.2	0.2						1	20		14
15	Pole Lights	1	30	1.8				1.8					1	20		16
17		1	20						0.0				1	20		18
19		1	20				0.0						1	20		20
21		1	20					0.0					1	20		22
23		1	20						0.0				1	20		24
25		1	20				0.0						1	20		26
27		1	20					0.0					1	20		28
29		1	20						0.0				1	20		30
							2	4	2							

SUB-TOTAL CONNECTED LOAD (KVA)	3	0	5	NOTES:
DEMAND FACTOR	0.95	NEC	0.80	1. PROVIDE MAIN BREAKER WITH SELECTABLE TRIP SETTING (MIN TO MAX)
SUB-TOTAL DEMAND LOAD (KVA)	3	0	4	
TOTAL CONNECTED LOAD (KVA)	8			
TOTAL DEMAND LOAD (KVA)	7			23.7

100% CONSTRUCTION DOCUMENTS

Revisions	Date
UPDATED	6/2/14
UPDATED	4/17/13

VA FORM 08-6231

CONSULTANTS:

Applied Engineering Services
9100 Keystone Crossing, Suite 200
Indianapolis, IN 46240

FRANCIS L. ST. JOHN 082-049008 REGISTERED PROFESSIONAL ENGINEER STATE OF ILLINOIS
7/31/14

ARCHITECT/ENGINEERS:

AMERICAN STRUCTUREPOINT INC.
7260 Shadeland Station | Indianapolis, Indiana 46256
TEL 317.547.5580 | FAX 317.543.0270
www.structurepoint.com

Applied Engineering Services
9100 Keystone Crossing, Suite 200
Indianapolis, IN 46240
Tele: (317) 810-4141 | Fax: (317) 810-4140
www.applied-e-s.com

Drawing Title: ELECTRICAL DETAILS AND SCHEDULES

Approved: Project Director

Project Title: VA Medical Center, Illiana Healthcare System, Demolish Buildings 12, 26, 40, and 74

Location: Danville, Illinois

Date: 2014-12-12 | Checked: RAP | Drawn: MDJ

Project Number: 550-11-116

Building Number: 12

Drawing Number: 26-E-501

Dwg. 34 of 36

Office of Construction and Facilities Management

VA U.S. Department of Veterans Affairs

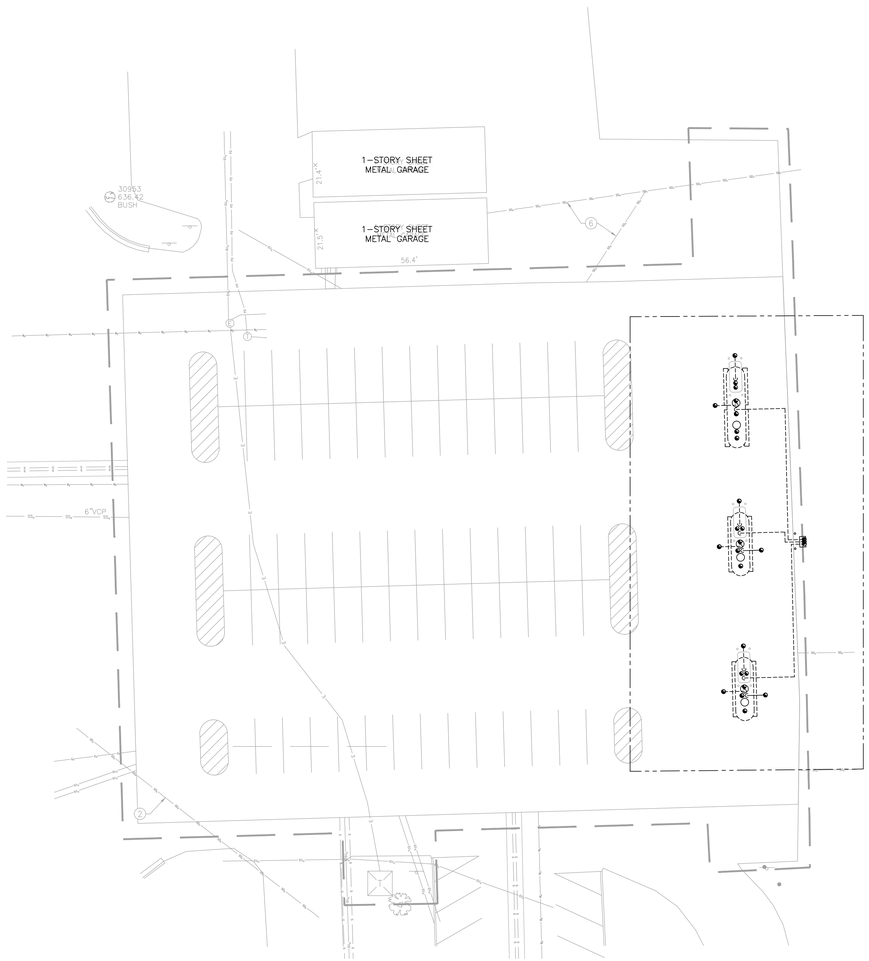

MECHANICAL SITE PLAN
SCALE:1" = 20'-0"

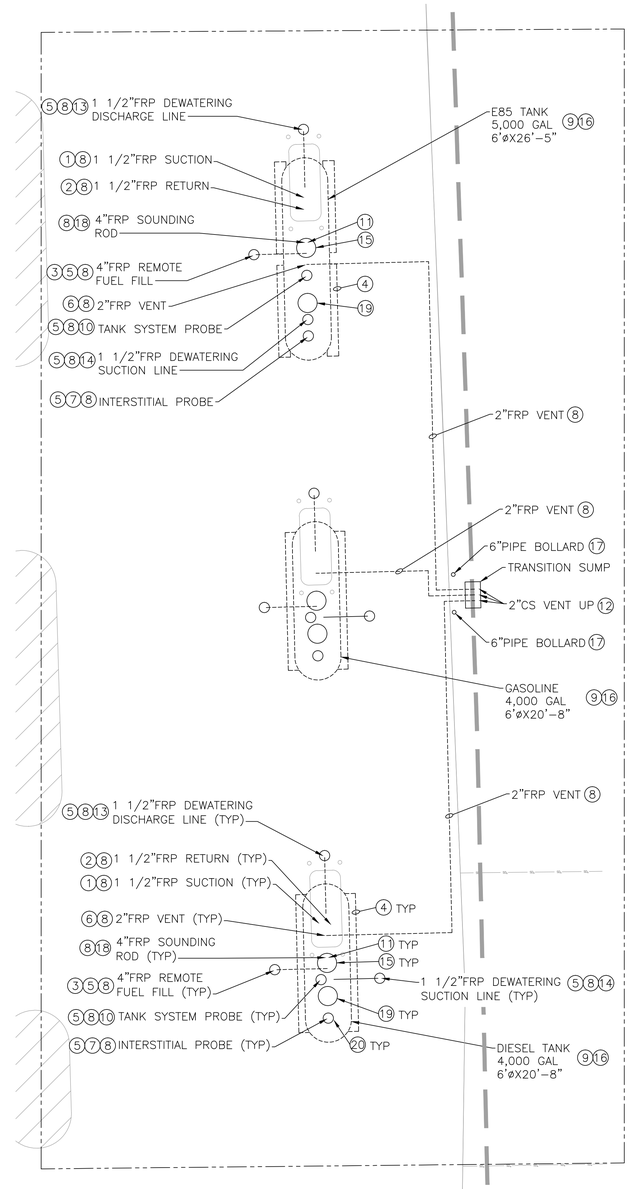

ENLARGED MECHANICAL NEW SITE PLAN
SCALE:1/8" = 1'-0"

PLAN NOTES:

1. 1 1/2"FRP FUEL PUMP SUCTION PIPE UP TO FUEL DISPENSER ISLAND. CHECK VALVE TO BE INCLUDED IN FUEL DISPENSER ISLAND AFTER SUCTION PUMP. CONNECT TO 2"TANK OPENING.
2. 1 1/2"FRP FUEL RETURN PIPE FROM FUEL DISPENSER ISLAND. PRESSURE RELIEF VALVE TO BE INCLUDED IN FUEL DISPENSER ISLAND. CONNECT TO 2"TANK OPENING.
3. INSTALL REMOTE 4"FRP FILL LINE IN 5 GAL SPILL BUCKET. COORDINATE CAMLOCK FUEL TRUCK CONNECTION SIZE AND STYLE WITH FUEL SUPPLIER. SEE REMOTE FUEL FILL DETAIL ON 26-M-501.
4. INSTALL MANUFACTURER PROVIDED ANCHORING BALLASTS PER MANUFACTURERS RECOMMENDATIONS.
5. PIPE FROM TANK CONNECTION INTO 5 GAL SPILL BUCKET. SEE TYPICAL SPILL BUCKET DETAIL ON 26-M-501.
6. 2"VENT CONNECTION TO 2"TANK OPENING.
7. INSTALL 4"FRP PIPE FROM TANK TO SPILL BUCKET. FEED LEAK DETECTION FLOAT SWITCH INTO BOTTOM OF TANK INTERSTITIAL SPACE THRU 4" PIPE CONNECTION. INTERSTITIAL SPACE OF TANK TO BE DRY. CAP PIPE WATERTIGHT.
8. PIPING TO BE INSTALLED IN FRP CONTAINMENT PIPE.
9. TOP OF TANK TO BE 4'-0" BELOW GRADE. SEE TANK DETAIL ON 26-M-501.
10. INSTALL 4"FRP PIPE FROM TANK TO SPILL BUCKET. INSTALL REMOVABLE TANK SYSTEM PROBE. CAP PIPE WATERTIGHT.
11. REMOVABLE OVERFILL PREVENTION VALVE IN TANK.
12. VENT PIPING TO TURN UP IN A POLYETHYLENE TRANSITION SUMP. TRANSITION FROM FRP TO CARBON STEEL PIPING IN TRANSITION SUMP. VENT PIPING TO EXTEND MIN 12'-0" ABOVE GRADE. PROVIDE PRESSURE VACUUM VENT AT TOP OF RISER. SEE VENT PIPING DETAIL ON 26-M-501.
13. DEWATERING DISCHARGE CONNECTION TO 2"TANK OPENING.
14. DEWATERING SUCTION CONNECTION TO 2"TANK OPENING. DROP FLEXIBLE HOSE TO BOTTOM OF TANK.
15. 30"MANHOLE FOR ACCESS TO OVERFILL PREVENTION VALVE AND SOUNDING ROD WITH 30"CAST IRON MANHOLE COVER.
16. SEE TANK DETAIL ON SHEET 26-M-501.
17. SEE PIPE BOLLARD DETAIL ON SHEET 26-M-501.
18. INSTALL 4"FRP PIPE FROM TANK TO SPILL BUCKET FOR SOUNDING ROD. PROVIDE REMOVABLE, WATERTIGHT CAP.
19. 30"MANHOLE FOR TANK ACCESS WITH 30"CAST IRON COVER.
20. 30"MANHOLE FOR ACCESS TO TANK SYSTEM PROBE AND INTERSTITIAL PROBE WITH 30"CAST IRON MANHOLE COVER.

KEY PLAN
SCALE:NONE

100% CONSTRUCTION DOCUMENTS

Revisions:	Date
UPDATED	6/2/14
UPDATED	4/17/13

CONSULTANTS:

Applied Engineering Services
9100 Keystone Crossing, Suite 200
Indianapolis, IN 46240

FRANCIS L. ST. JOHN
082-049008
REGISTERED PROFESSIONAL ENGINEER
STATE OF INDIANA
7/31/14

ARCHITECT/ENGINEERS:

AMERICAN STRUCTUREPOINT INC.
7260 Shadeland Station | Indianapolis, Indiana 46256
TEL 317.547.5580 | FAX 317.543.0270
www.structurepoint.com

Applied Engineering Services
9100 Keystone Crossing, Suite 200
Indianapolis, IN 46240
Tele: (317) 810-4141 | Fax: (317) 810-4140
www.applied-e-s.com

Drawing Title: MECHANICAL SITE PLAN

Approved: Project Director

Project Title: VA Medical Center
Illiana Healthcare System
Demolish Buildings 12, 26, 40, and 74

Location: Danville, Illinois

Date: 2014-12-12 | Checked: KAS | Drawn: MDJ

Project Number: 550-11-116

Building Number: 12

Drawing Number: 26-M-101

Dwg. 35 of 36

Office of Construction and Facilities Management

VA U.S. Department of Veterans Affairs

VA FORM 08-6231

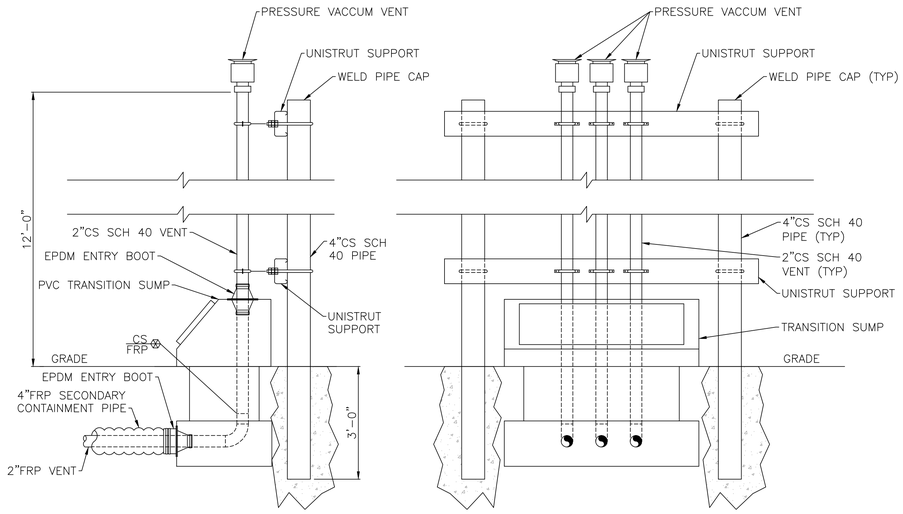

VENT PIPE SUPPORT DETAIL (C / 26-M-101)
SCALE: NONE

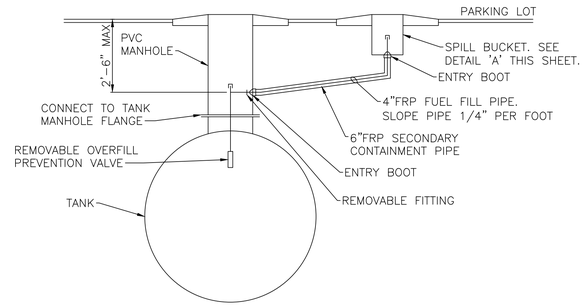

REMOTE FUEL FILL DETAIL (B / 26-M-101)
SCALE: NONE

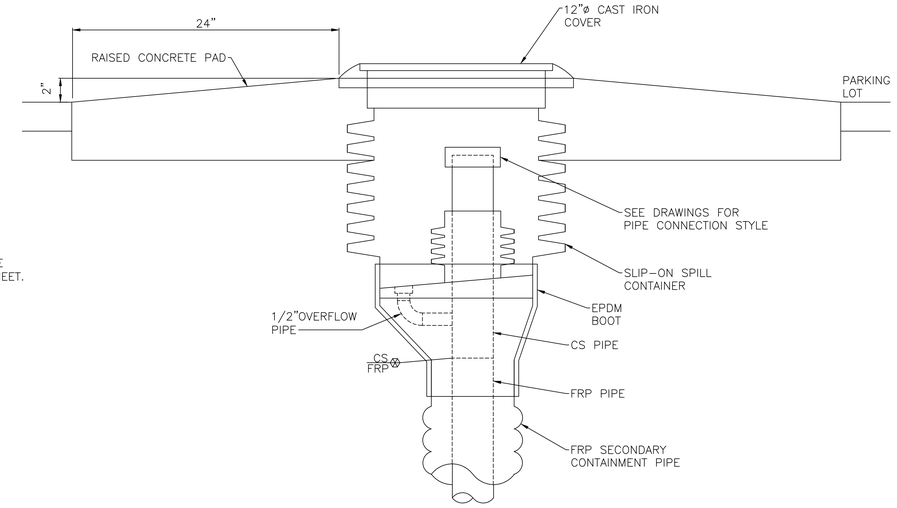

TYPICAL SPILL BUCKET DETAIL (A / 26-M-101)
SCALE: NONE

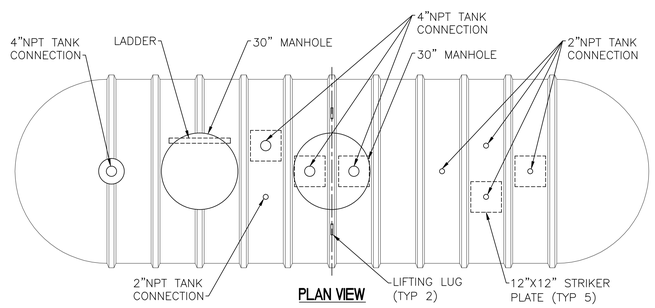

PLAN VIEW

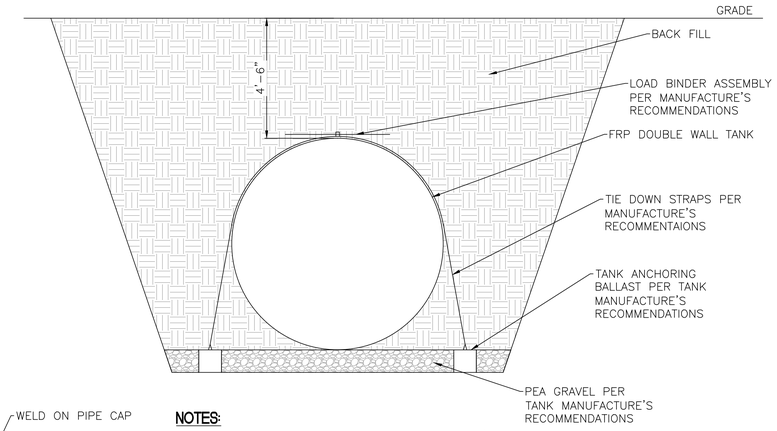

NOTES:

1. INSTALLATION SUBJECT TO TANK MANUFACTURER'S INSTRUCTIONS.

TANK ANCHORING DETAIL (E / 26-M-101)
SCALE: NONE

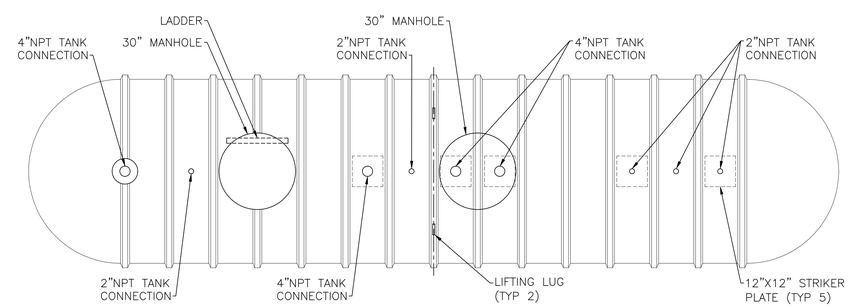

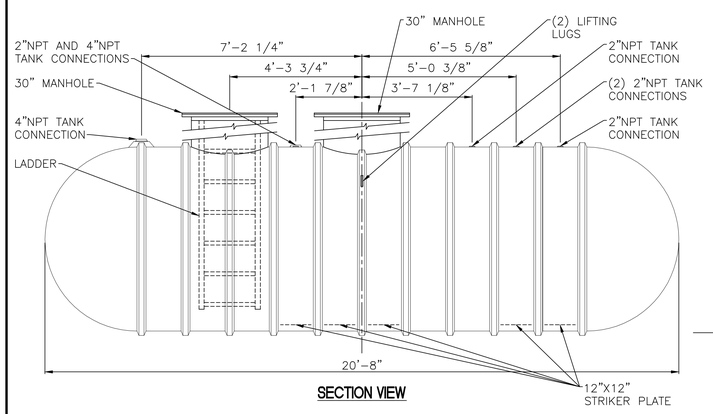

SECTION VIEW

NOTES:

1. DIMENSIONS ARE APPROXIMATE AND FOR REFERENCE ONLY. REFER TO TANK MANUFACTURER'S SHOP DRAWING FOR CONSTRUCTION.

4,000 GAL TANK DETAIL (G / 26-M-101)
SCALE: NONE

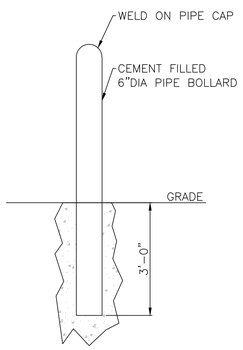

PIPE BOLLARD DETAIL (F / 26-M-101)
SCALE: NONE

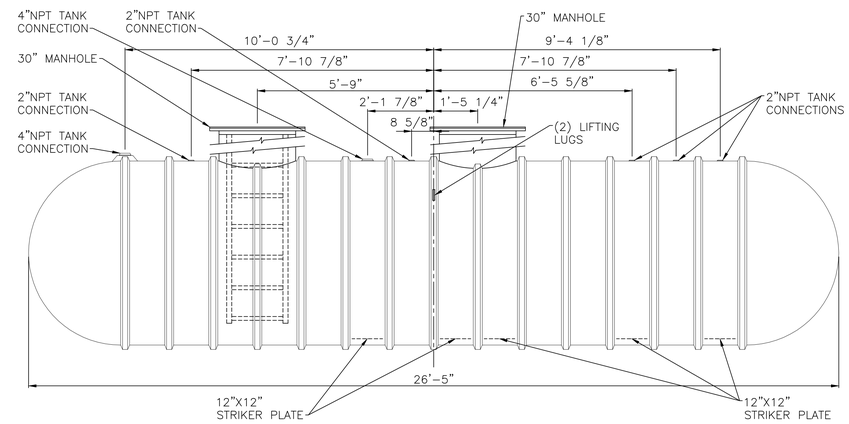

NOTES:

1. DIMENSIONS ARE APPROXIMATE AND FOR REFERENCE ONLY. REFER TO TANK MANUFACTURER'S SHOP DRAWING FOR CONSTRUCTION.

5,000 GAL TANK DETAIL (D / 26-M-101)
SCALE: NONE

100% CONSTRUCTION DOCUMENTS

Revisions	Date
UPDATED	6/2/14
UPDATED	4/17/13

CONSULTANTS:

Applied Engineering Services
9100 Keystone Crossing, Suite 200
Indianapolis, IN 46240

FRANCIS L. ST. JOHN 082-049008 REGISTERED PROFESSIONAL ENGINEER STATE OF ILLINOIS
7/31/14

ARCHITECT/ENGINEERS:

AMERICAN STRUCTUREPOINT INC.
7260 Shadeland Station | Indianapolis, Indiana 46256
TEL 317.547.5580 | FAX 317.543.0270
www.structurepoint.com

Applied Engineering Services
9100 Keystone Crossing, Suite 200
Indianapolis, IN 46240
Tele: (317) 810-4141 | Fax: (317) 810-4140
www.applied-e-s.com

Drawing Title: MECHANICAL DETAILS

Approved: Project Director

Project Title: VA Medical Center, Illiana Healthcare System, Demolish Buildings 12, 26, 40, and 74

Location: Danville, Illinois

Date: 2014-12-12 | Checked: KAS | Drawn: MDJ

Project Number: 550-11-116
Building Number: 12
Drawing Number: 26-M-501
Dwg. 36 of 36

Office of Construction and Facilities Management
VA U.S. Department of Veterans Affairs

VA FORM 08-6231