LEGEND

SECURITY

M/T — CARD ACCESS READER; LETTER INDICATES AS FOLLOWS:
M=MOUNT
C–CEILING D–DESK F–FLUSH H–HIDDEN
M–MULLION P–PEDESTAL R–RACK
S–SURFACE W–WALL
T=TECHNOLOGY/TYPE
B–BARCODE F–ELEVATOR FLOOR CALL
H–ELEVATOR HALL CALL M–MAG STRIP
P–PROXIMITY S–SMART CARD T–TOKEN

M/T — ELECTRONIC LOCK; LETTER INDICATES AS FOLLOWS:
M=MOUNT
C–CEILING D–DESK F–FLUSH H–HIDDEN M–MULLION
P–PEDESTAL R–RACK S–SURFACE W–WALL
T=TECHNOLOGY/TYPE
D–DEADBOLT H–HYBRID L–LATCH SET
M–MAGNETIC S–STRIKE

M PTZ — SECURITY ACCESS, VIDEO CAMERA WITH LENS
M = MOTION DETECTOR
PZ = MOTION DETECTOR WITH PAN AND ZOOM
PTZ= MOTION DETECTOR WITH PAN, TILT, AND ZOOM

M — KEYPAD; LETTER INDICATES AS FOLLOWS:
M=MOUNT
C–CEILING D–DESK F–FLUSH H–HIDDEN
M–MULLION P–PEDESTAL R–RACK
S–SURFACE W–WALL

NOTE: WIRING SHALL BE IN EMT.

NURSE CALL

NC — NURSE CALL STATION
'HW' INDICATES PATIENT HEADWALL NURSE CALL

'PS' INDICATES PULL STATION NURSE CALL

'W' INDICATES WALL MOUNTED NURSE CALL

N — DUTY STATION

DL — DOME LIGHT

CL — CORRIDOR LIGHT

NCS — NURSE'S CALL MASTER STATION MTD ON NURSE'S COUNTER TOP UNLESS OTHERWISE NOTED.

NOTE: WIRING SHALL BE IN EMT.

FIRE ALARM

F — FIRE ALARM PULL STATION. MOUNTED 48" AFF TO CENTERLINE OF STATION.

15 W F — AUDIO/VISUAL ALARM. COMBINATION SPEAKER WITH ADJUSTABLE CANDELA STROBE LIGHT. WALL MOUNTED 90" AFF TO TOP. CEILING MOUNT WHERE INDICATED. NUMBER INDICATES CANDELA RATING OF STROBE. 'WP' INDICATES WEATHERPROOF UNIT.

15 F — VISUAL ALARM. ADJUSTABLE CANDELA STROBE LIGHT. WALL MOUNTED 90" AFF TO TOP. CEILING MOUNT WHERE INDICATED. NUMBER INDICATES CANDELA RATING OF STROBE. REFER TO SPECIAL REQUIREMENTS IN SLEEPING AREAS. NS INDICATES NON–SUPERVISED 120 VOLT REMOTE VISUAL SIGNAL, 177 CANDELA, CONNECTED TO NON–SUPERVISED SMOKE DETECTOR.

S — EXISTING CEILING MOUNTED SPEAKER (AUDIO ALARM) WIRING SHALL BE IN EMT.

S — PHOTOELECTRIC SMOKE DETECTOR WITH ADDRESSABLE BASE. CEILING MOUNTED.

D — DUCT MOUNTED SMOKE DETECTOR WITH REMOTE TEST AND RESET STATION. FURNISHED AND WIRED BY ELECTRICAL CONTRACTOR, INSTALLED BY MECHANICAL CONTRACTOR.
'S' INDICATES LOCATED IN SUPPLY AIR DUCT
'R' INDICATES LOCATED IN RETURN AIR DUCT

TS — REMOTE TEST STATION WITH RESET FOR DUCT SMOKE DETECTOR

LIGHTING

B / N/L — LED LUMINAIRE (LIGHTING FIXTURE)
SURFACE OR RECESSED MOUNTED
HATCH INDICATES EMERGENCY CIRCUIT
'N/L' INDICATES NIGHT LIGHT CIRCUIT
UPPERCASE LETTER INDICATES TYPE (TYPICAL)

C — WALL MOUNTED LUMINAIRE

H — SURFACE LUMINAIRE OR RECESSED DOWNLIGHT LUMINAIRE

X1 — EXIT SIGN – DIRECTIONAL ARROWS AS INDICATED. CEILING OR WALL MOUNT AT 7'–6" AFF TO CENTER OR ABOVE DOOR

PCH — PHOTOELECTRIC CELL

$ — SWITCH MOUNTED 48" AFF UNLESS NOTED OTHERWISE
$a — 'a' LOWERCASE LETTER INDICATES SWITCH CONTROL

$3 — '3' INDICATES THREE–WAY

$4 — '4' INDICATES FOUR–WAY

$D — 'D' INDICATES DIMMER SWITCH

$T — 'T' INDICATES TIMER SWITCH – BASIS OF DESIGN: HUBBELL TD200 OR APPROVED EQUIVALENT

$WP — 'WP' INDICATES WEATHERPROOF COVER

$O — 'O' INDICATES OCCUPANCY SENSOR – BASIS OF DESIGN: HUBBELL #LHMTS0 OR APPROVED EQUIVALENT

$O1 — '01' INDICATES OCCUPANCY SENSOR – BASIS OF DESIGN: HUBBELL #LHMTS1 OR APPROVED EQUIVALENT

OC — CEILING MOUNTED OCCUPANCY SENSOR WITH POWER PACK – BASIS OF DESIGN: HUBBELL #OMNIDT2000RP WITH #UVPP OR APPROVED EQUIVALENT

$OS — WALL MOUNTED OCCUPANCY SENSOR. REFER TO SPECIFICATIONS FOR FURTHER INFORMATION.

COMMUNICATIONS

▼ — DATA ONLY OUTLET MOUNTED AS NOTED. INDICATES THREE DATA PORTS. PIPE TO CABLE TRAY.
'W' INDICATES WALL MOUNTED DATA OUTLET AT 54" ABOVE FINISHED FLOOR.

TV — CATV OUTLET MOUNTED AS NOTED. HOMERUN COAX CABLE TO VA SELECTED SOURCE. SYSTEM SHALL BE IN EMT.

WAP — WIRELESS ACCESS POINT. PROVIDE (1) DATA OUTLET FOR ANTENNA AT ACCESSIBLE LOCATION ABOVE CEILING. PROVIDE (1) LEVEL 6 CABLE BACK TO RACK MOUNTED PATCH PANEL. PROVIDE DUPLEX RECEPTACLE AND CONNECT TO BRANCH CIRCUIT AS INDICATED ON FLOOR PLANS. ALL IN CABLE TRAY.

W — INTERCOM. 'W' INDICATES WALL MOUNTED AT 42" AFF UNLESS OTHERWISE NOTED.

POWER

—NUE— UNDERGROUND WIRING
'NUE' INDICATES NEW UNDERGROUND ELECTRIC WIRING
'EUE' INDICATES EXISTING UNDERGROUND ELECTRIC WIRING
'NUC' INDICATES NEW UNDERGROUND COMMUNICATIONS WIRING
'EUC' INDICATES EXIST. UNDERGROUND COMMUNICATIONS WIRING

——— NEW INTERIOR WIRING – ABOVE GRADE – CONCEALED OR EXPOSED

—G— GROUNDING CONDUCTOR

HOMERUN – ARROWS INDICATE NUMBER OF CIRCUITS (GND NOT SHOWN) CONDUCTORS ARE #12 UNLESS NOTED OTHERWISE.

AGA–23 — CIRCUIT NUMBER DESIGNATION
PANELBOARD DESIGNATION

J — JUNCTION BOX – SIZE AS INDICATED OR REQUIRED.

T — THERMOSTAT

AGA — PANELBOARD, RECESSED OR SURFACE MOUNT AS SPECIFIED. DESIGNATION PER CLIENT STANDARD

T1 30 — DRY–TYPE TRANSFORMER – KVA AS INDICATED, 'T1' INDICATES DESIGNATION

A/P/V/N — SAFETY DISCONNECT SWITCH
A INDICATES AMPS
P INDICATES POLES
V INDICATES LINE TO LINE VOLTS
N INDICATES NEMA ENCLOSURE DESIGNATION
\ (SLASH) INDICATES FUSIBLE

2 A/P/V/N — MAGNETIC MOTOR STARTER – 'PR' INDICATES PROVIDE PHASE PROTECTION RELAY. NUMBER INDICATES NEMA SIZE

2 — COMBINATION TYPE MAGNETIC MOTOR STARTER/DISCONNECT NUMBER INDICATES NEMA SIZE

10 — MOTOR – NUMBER INDICATES HORSEPOWER. WIRE COMPLETE WITH DISCONNECT SWITCH AS INDICATED OR REQUIRED, 'M' INDICATES FRACTIONAL HORSEPOWER

1 — INDICATES KEY NOTE

DUPLEX RECEPTACLE – 125V, 20A, GROUND TYPE
MOUNT 18" AFF UNLESS NOTED OTHERWISE
'S' INDICATES TOP HALF SWITCHED
'IG' INDICATES ISOLATED GROUND
'WP' INDICATES WEATHER–PROOF. PROVIDE WEATHER–RESISTANT PER NEC 406.8.
'SS' INDICATES SURGE SUPPRESSION TYPE
'TR' INDICATES TAMPER RESISTANT TYPE
'HG' INDICATES HOSPITAL GRADE
'GF' INDICATES GROUND FAULT CIRCUIT INTERRUPTER

SINGLE RECEPTACLE – 125V, 20A, GROUND TYPE – MOUNT 18" AFF UNLESS NOTED OTHERWISE

DOUBLE DUPLEX RECEPTACLE – 125V, 20A, GROUND TYPE – MOUNT 18" AFF UNLESS NOTED OTHERWISE

14–30 — SINGLE POWER RECEPTACLE – SPECIAL PURPOSE – NEMA CONFIGURATION AS INDICATED

$MMSS — 'MMSS' INDICATES MANUAL MOTOR STARTER (WITH OVERLOAD PROTECTION)

POWER STRIP. INDICATES 4 SINGLE RECEPTACLES, UNLESS OTHERWISE NOTED.

ABBREVIATIONS

A	AMP
AC	ALTERNATING CURRENT
ADA	AMERICANS WITH DISABILITIES ACT
AF	AMP FRAME
AFCI	ARC FAULT CIRCUIT INTERRUPTER
AFF	ABOVE FINISHED FLOOR
AFG	ABOVE FINISHED GRADE
AIC	AMPERES INTERRUPTING CAPACITY
AL	ALUMINUM
AT	AMP TRIP
ATC	AUTOMATIC TEMPERATURE CONTROL
AWG	AMERICAN WIRE GAUGE
BLDG	BUILDING
C	CONDUIT
CB	CIRCUIT BREAKER
CKT	CIRCUIT
CEIL	CEILING
℄	CENTERLINE
CMU	CONCRETE MASONRY UNIT
CONC	CONCRETE
CONT'D	CONTINUED
CR	CRITICAL
CU	COPPER
CUH	CABINET UNIT HEATER
DC	DIRECT CURRENT
DW	DISH WASHER
EC	ELECTRICAL CONTRACTOR
EF	EXHAUST FAN
EGC	EQUIPMENT GROUNDING CONDUCTOR
EM	EMERGENCY
EUH	ELECTRIC UNIT HEATER
EWC	ELECTRIC WATER COOLER
FACP	FIRE ALARM CONTROL PANEL
GD	GARBAGE DISPOSAL
GEC	GROUNDING ELECTRODE CONDUCTOR
GFI	GROUND FAULT INTERRUPTER
GND	GROUND
HID	HIGH INTENSITY DISCHARGE
HOA	HAND–OFF–AUTOMATIC
HP	HORSEPOWER
HPS	HIGH PRESSURE SODIUM
HZ	HERTZ
JB	JUNCTION BOX
KAIC	THOUSAND AMP INTERRUPTING CAPACITY
KCMIL	THOUSAND CIRCULAR MIL
KV	THOUSAND VOLTS (KILOVOLT)
KVA	THOUSAND VOLT–AMPS
KW	THOUSAND WATTS (KILOWATT)
LC	LIGHTING CONTACTORS
LCP	LATERAL CONTROL PIT
LED	LIGHT EMITTING DIODE
LP	LIGHTING PANELBOARD
LTG	LIGHTING
MCC	MOTOR CONTROL CENTER
MCCB	MOLDED CASE CIRCUIT BREAKER
MCB	MAIN CIRCUIT BREAKER
MH	MANHOLE OR METAL HALIDE
MIC	MICROWAVE OR MICROPHONE
MLO	MAIN LUGS ONLY
MTS	MANUAL TRANSFER SWITCH
NC	NORMALLY CLOSED OR NURSE CALL
NEC	NATIONAL ELECTRICAL CODE
NFPA	NATIONAL FIRE PROTECTION ASSOCIATION
NIC	NOT IN CONTRACT
NO	NORMALLY OPEN
NO.	NUMBER
OL	OVERLOAD
P	POLE
PA	PUBLIC ADDRESS
PB	PUSH BUTTON
PF	POWER FACTOR
PH	PHASE
PNL	PANEL
PT	POTENTIAL TRANSFORMER
PVC	POLYVINYL CHLORIDE
REF	REFRIGERATOR
RSC	RIGID STEEL CONDUIT
RTU	ROOF TOP UNIT
SCCR	SHORT CIRCUIT CURRENT RATING
SF	SUPPLY FAN
SLD	SINGLE LINE DIAGRAM
SS	SOLID STATE
SWBD1	SWITCHBOARD, NUMBER AS INDICATED
TC	TIME CLOCK
TELCOM	TELECOMMUNICATIONS
TS	TRANSFER SWITCH
T&B	TOP AND BOTTOM
TYP	TYPICAL
TV	TELEVISION
UC	UNDER COUNTER
UG	UNDERGROUND
V	VOLT
VA	DEPARTMENT OF VETERAN AFFAIRS
VA	VOLT–AMPERE
VAMC	VA MEDICAL CENTER
VFD	VARIABLE FREQUENCY DRIVE
W	WATT
W/	WITH
WP	WEATHERPROOF
WRG	WIRING
XFMR	TRANSFORMER
XP	EXPLOSION–PROOF
3PH	THREE PHASE (Ø)
3W	THREE WIRE
4W	FOUR WIRE
(R)	LOCATION OF RELOCATED DEVICE OR EQUIPMENT
(RR)	REMOVE AND RELOCATE EXISTING DEVICE OR EQUIPMENT
(RX)	REMOVE EXISTING DEVICE OR EQUIPMENT
(X)	EXISTING DEVICE OR EQUIPMENT TO REMAIN
(XR)	EXISTING DEVICE OR EQUIPMENT TO BE REMOVED AND REPLACED AT SAME LOCATION

GENERAL NOTES

A. NOT ALL SYMBOLS INDICATED IN THE LEGEND, OR LISTED ABBREVIATIONS, APPEAR ON THE DRAWINGS. COORDINATE WORK ACCORDINGLY. COMPLY WITH SPECIFICATIONS AND NOTES BELOW AS APPLICABLE.

B. ALL RECEPTACLES SHALL BE INSTALLED 18" AFF UNLESS NOTED OTHERWISE.

C. ALL WIRING SHALL BE COPPER. ALUMINUM WIRING IS NOT ALLOWED. UNLESS OTHERWISE NOTED, ALL WIRING SHALL BE 2#12 AWG AND 1#12 AWG EQUIPMENT GROUNDING CONDUCTOR IN EMT. HOMERUNS FED FROM A 20A–1P, 120V CIRCUIT IN EXCESS OF 70' SHALL BE #10 AWG SOLID. THERE SHALL BE NO SHARED NEUTRALS.

D. CONDUCTORS SHALL BE SOLID AND #8 OR SMALLER.

E. SEE MECHANICAL PLANS FOR HVAC UNITS, PUMPS AND FANS CONTROLLED BY THERMOSTATS AND OVERRIDE SWITCHES (PROVIDED BY ATC CONTRACTOR).

F. FUSES AND OVERLOAD UNITS FOR MOTORS SHALL BE SIZED BASED ON ACTUAL MOTOR NAMEPLATE DATA AND IN ACCORDANCE WITH NEC.

G. ALL WORK SHALL COMPLY WITH LATEST EDITION OF NFPA70, NFPA72, NFPA99, NFPA101, NEC & ALL FEDERAL, STATE & LOCAL REGULATIONS.

H. ALL PENETRATIONS THROUGH FLOORS, RATED WALLS AND PARTITIONS SHALL BE SEALED WITH UL APPROVED FIRE SEALANT MATERIAL TO MAINTAIN FIRE RATING FOR THE SEPARATION.

I. ALL ENCLOSURES, CONDUIT BODIES AND THEIR COVERS CONTAINING FIRE ALARM SYSTEM CONDUCTORS SHALL BE PAINTED RED.

J. AN EQUIPMENT GROUNDING CONDUCTOR SHALL BE INSTALLED WITH ALL FEEDER AND BRANCH CIRCUITS. SIZE IN ACCORDANCE WITH NFPA 70 ARTICLE 250.

K. FLEXIBLE CONNECTIONS TO MOTORS SHALL BE LIQUID TIGHT FLEXIBLE METAL CONDUIT IN A 360° LOOP EXCEPT AS NOTED OTHERWISE.

L. COORDINATE INSTALLATION OF COMMUNICATION OUTLETS WITH THE VA.

M. LOCATE DISCONNECTS AT EQUIPMENT AS REQUIRED BY MANUFACTURER. LOCATIONS ON DRAWINGS ARE APPROXIMATE.

N. OPERATE ALL LED LAMPS FROM INITIAL INSTALLATION FOR 100 HOURS AT FULL OUTPUT (NO DIMMING) TO SEASON LAMPS AND STABILIZE LAMP COLOR.

O. IDENTIFICATION:
RECEPTACLES CONNECTED TO THE ESSENTIAL ELECTRICAL SYSTEM SHALL BE RED WITH A WHITE LABEL CONTAINING THE WORD "EMERGENCY" IN BLACK ON THE TOP OF THE PLATE AND A WHITE LABEL WITH THE CIRCUIT NUMBER IN BLACK ON THE BOTTOM. "NORMAL" RECEPTACLES SHALL HAVE A WHITE LABEL WITH THE CIRCUIT NUMBER IN BLACK AT THE BOTTOM OF THE PLATE.

P. PROVIDE WIRE MARKERS TO IDENTIFY CABLES FOR ALL SYSTEMS AT THE ORIGIN, PULL BOXES, AND TERMINATION POINTS. LABELS SHALL BE SELF ADHESIVE OR HEAT SHRINK TYPE.

Q. NO LIVE WORK WILL BE ALLOWED. EVERY CIRCUIT SHALL BE LOCKED–OUT AND TAGGED–OUT BEFORE COMMENCING WORK.

R. ALL WIRING SHALL BE IN RACEWAY.
–INSTALL CABLE TRAY FOR COMM / DATA WIRING.
–CONTROL SYSTEMS SHALL BE IN BLUE EMT.
–FIRE ALARM SYSTEMS SHALL BE IN RED EMT.
–"J" HOOKS SHALL NOT BE PERMITTED.

FULLY SPRINKLERED
BID DOCUMENTS
FOR CONSTRUCTION

Revisions:	Date

CONSULTANTS:

ARCHITECT/ENGINEERS:
PARADIGM
ENGINEERS AND CONSTRUCTORS
200 Envoy Circle #201, Louisville KY 40299 – PH: 502.339.8511 – www.paradigmusa.com

STATE OF KENTUCKY — BLAKE C. VAN GANSBEKE 24,738 LICENSED PROFESSIONAL ENGINEER — 05-21-2015

Drawing Title: ELECTRICAL LEGEND, GENERAL NOTES, AND ABBREVIATIONS	Project Title: REMODEL CARDIAC CATH LAB SUITE		Project Number: 635-CS1-102
			Building Number: F
Approved Project Director	Control Number: VA256-13-C-0277	Location: OKLAHOMA CITY VAMC, 921 NE 13TH STREET, OKLAHOMA CITY, OK 73104	Drawing Number: E-001
	PO Number: 635-C35336	Date: 05-21-2015 / Checked: WLM / Drawn: MMF	

Office of Construction and Facilities Management
Department of Veterans Affairs

VA FORM 08-6231

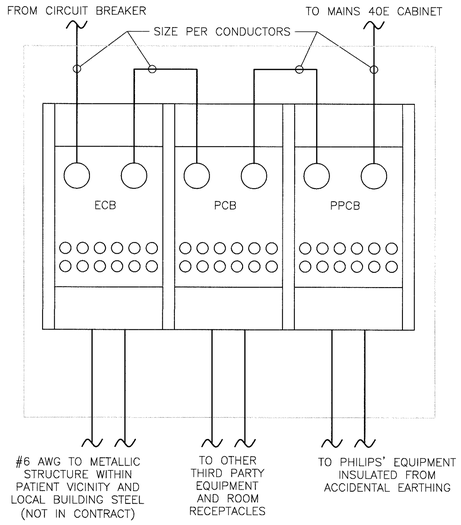

C1 EQUIPOTENTIAL REFERENCE BAR 'ERB' DETAIL
NO SCALE

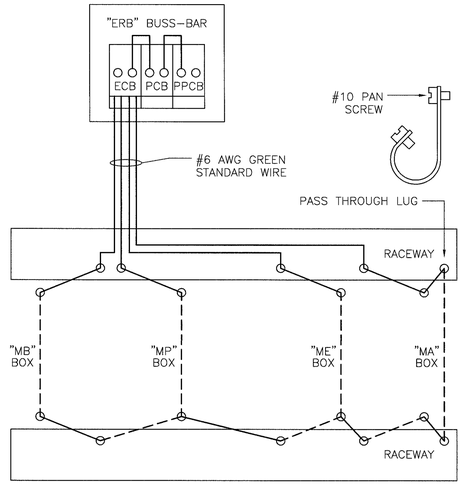

B3 GROUNDING DETAIL
NO SCALE

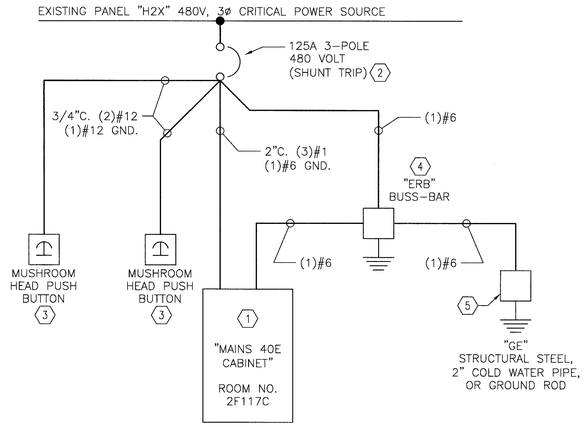

B6 SINGLE LINE DIAGRAM
NO SCALE

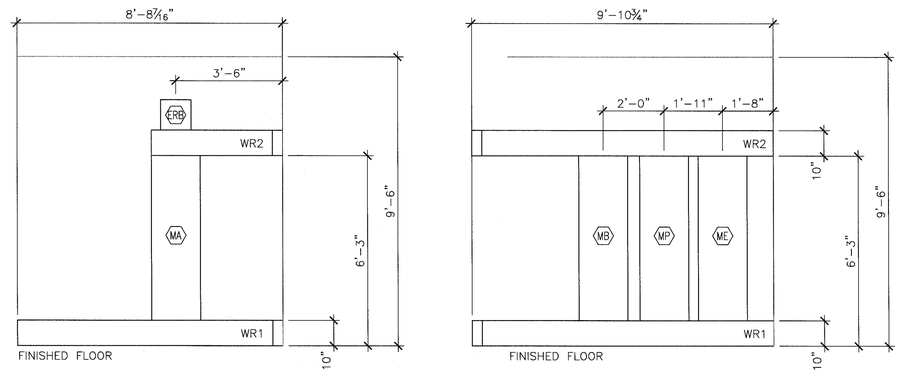

D4 EQUIPMENT CLOSET
1/2" = 1'-0"

GENERAL ELECTRICAL PLAN NOTES

A. REFER TO E-001 FOR ELECTRICAL LEGEND, GENERAL NOTES, AND ABBREVIATIONS.

B. ALL CONDUITS TO BE CONCEALED WITHIN ALL WALLS UNLESS NOTED OTHERWISE.

C. SOME WORK UNDER THIS CONTRACT WILL REQUIRE WORK DUTIES TO BE PERFORMED AFTER NORMAL WORKING HOURS. DETERMINATION OF SPECIFIC WORK DUTIES TO BE PERFORMED AFTER HOURS SHALL BE MADE BY VA STAFF AT THEIR CONVENIENCE. POSSIBLE WORK REQUIRING AFTER HOURS APPROVAL INCLUDES, BUT IS NOT LIMITED TO: POWER OUTAGES, DISRUPTION OF SERVICES, EXTREME NOISE AND / OR VIBRATION, CUTTING AND PATCHING OF CONCRETE AND DELIVERIES OF EQUIPMENT.

D. METAL CONDUIT SHALL NOT BE USED AS THE EQUIPMENT GROUND CONDUCTOR.

E. THE PHILIPS SYSTEM USES AN ISOLATED GROUND SCHEME GROUNDING ONLY THE ALLAURA SYSTEM PER NEC 250.96B. THE RACEWAY FORM THE XRAY BREAKER (EQUIPMENT TAB "CB") TO THE MAINS 40E CABINET (EQUIPMENT TAG "MA") SHALL BE SUPPLEMENTED BY AN INTERNAL INSULATED EQUIPMENT GROUNDING CONDUCTOR INSTALLED IN ACCORDANCE WITH NEC 250.146(D).

F. INSTALL AN INSULATED STRANDED GROUND WIRE PER FEEDER/CONDUCTOR SIZE FROM MAIN DISCONNECT (EQUIPMENT TAG "CB") TO THE ERB (EQUIPMENT TAG "ERB") AND FROM THE ERB TO THE MAINS 40E CABINET (EQUIPMENT TAG "MA") PER NEC 250.146(D)

ELECTRICAL PLAN NOTES

1. PANEL FURNISHED "BY OTHERS." ROUTE FEEDER CONDUCTORS AND CONDUIT AS INDICATED. MAKE FINAL CONNECTIONS TO CABINET.
2. PROVIDE NEW 125A, 480V, 3-POLE CIRCUIT BREAKER WITH SHUNT TRIP.
3. PROVIDE MUSHROOM HEAD PUSH-BUTTON, REFER TO SHEET EP101 FOR LOCATION.
4. PROVIDE EQUI-POTENTIAL BUSS BAR. REFER TO DETAILS B3/EP501, B6/EP501, D4/EP501 FOR FURTHER INFORMATION. REFER TO SHEET EP101 FOR LOCATION.
5. PROVIDE BONDING JUMPER GROUNDING MEANS FROM "ERB" TO EXISTING GROUNDING SYSTEM.

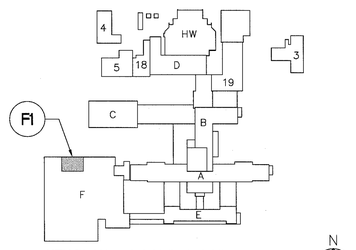

KEY PLAN - SECOND FLOOR
NTS

FULLY SPRINKLERED
BID DOCUMENTS
FOR CONSTRUCTION

Revisions	Date

CONSULTANTS:

ARCHITECT/ENGINEERS:

PARADIGM
ENGINEERS AND CONSTRUCTORS
200 Envoy Circle #201, Louisville KY 40299 – PH: 502.339.8511 – www.paradigmusa.com

19 May 2015
STATE OF KENTUCKY
JULIANNE C. GOBEL VAN GUNSBEKE
24,736
LICENSED
PROFESSIONAL ENGINEER

Drawing Title: ELECTRICAL DETAILS PHILIPS EQUIPMENT		Project Title: REMODEL CARDIAC CATH LAB SUITE		Project Number: 635-CS1-102
				Building Number: F
Approved Project Director	Control Number: VA256-13-C-0277	Location: OKLAHOMA CITY VAMC, 921 NE. 13TH STREET, OKLAHOMA CITY, OK 73104		Drawing Number: E-501
	PO Number: 635-C35336	Date: 05-21-2015	Checked: WLM / Drawn: MMF	

Office of Construction and Facilities Management
Department of Veterans Affairs

VA FORM 08-6231

POWER SCHEDULE

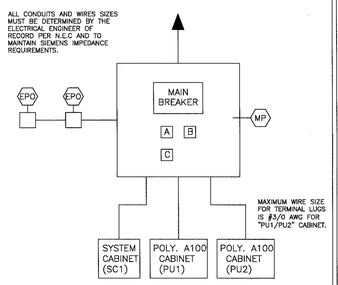

ITEM	QTY	DESCRIPTION				
MP	1	MAIN PANEL WITH MAIN BREAKER FLUSH OR SURFACE MOUNTED. MAIN BREAKER MUST HAVE TRIPPING DEVICE SO WHEN ANY EPO IS PRESSED THE MAIN BREAKER TRIPS.				
		MAIN BREAKER AMPS: 225				
		VOLTS	PHASES	NEUTRAL	GROUND	TOTAL WIRES
		480/277Y	3	1	1	5 (NOTE 1)
A	1	BREAKER AMPS: 100 (FOR PU1)				
		VOLTS	PHASES	NEUTRAL	GROUND	TOTAL WIRES
		480Y	3	0	1	4 (NOTE 1)
B	1	BREAKER AMPS: 100 (FOR PU2)				
		VOLTS	PHASES	NEUTRAL	GROUND	TOTAL WIRES
		480Y	3	0	1	4 (NOTE 1)
C	1	BREAKER AMPS: 50 (FOR SC1)				
		VOLTS	PHASES	NEUTRAL	GROUND	TOTAL WIRES
		480/277Y	3	1	1	5 (NOTE 1)
		1) ALL WIRES MUST BE SAME SIZE.				
EPO	VARIES	EMERGENCY POWER OFF BUTTON WITH PROTECTIVE COVER THAT PREVENTS ACCIDENTAL ACTIVATION OF THE EPO BUTTON. THE EPO MUST BE OF FAIL-SAFE DESIGN, THE CONTROL CIRCUIT FOR THE EPOs MUST HAVE AN ENERGY STORAGE SOURCE SO THAT THE CONTROL CIRCUIT NEVER LOSES POWER. ALL EPOs ARE TO BE LATCHING TYPE AND MUST BE RESET BEFORE MAIN BREAKER CAN BE RESET. IF ANY OPTIONAL UPS EQUIPMENT IS PROVIDED BY SIEMENS, THE CUSTOMER/CONTRACTOR SHALL PROVIDE AN ADDITIONAL CONTACT IN EACH EPO AND PROVIDE SEPARATE WIRING FOR AN ADDITIONAL EPO CIRCUIT AS REQUIRED. PLEASE COORDINATE THE TYPE OF CONTACT REQUIRED FOR THE UPS CIRCUIT WITH SIEMENS PROJECT MANAGER. THE EPOs MUST BE INSTALLED BY A QUALIFIED ELECTRICAL CONTRACTOR ACCORDING TO NATIONAL ELECTRICAL CODE, STATE AND LOCAL REGULATIONS. MEASURES SHOULD BE TAKEN TO DESIGN THE CIRCUIT IN SUCH A WAY THAT IT WILL ALWAYS WORK WHEN THE MEDICAL EQUIPMENT IS POWERED. THE CUSTOMER IS SOLELY RESPONSIBLE FOR THE IMPLEMENTATION OF THE EPOs AND THEIR ASSOCIATED CIRCUITS AND MUST MAKE THE FINAL DETERMINATION CONSIDERING ALL SITE CONDITIONS AND REGULATORY FACTORS.				
		ALL ITEMS LISTED IN THIS SCHEDULE SHALL BE SUPPLIED AND INSTALLED BY CUSTOMER/CONTRACTOR.				

ARTIS BIPLANE, NO UPS

CONDUIT LENGTH CALCULATIONS

IF SITE-SPECIFIC CONDITIONS EXCEED THE FOLLOWING ASSUMED VALUES, THEN ADDITIONAL LENGTH MUST BE SUBTRACTED BY THE ELECTRICAL CONTRACTOR FROM THE MAXIMUM CONDUIT LENGTHS LISTED.

IF DUCT LOCATIONS ARE ALTERED FROM THE SHOWN LAYOUT, IT IS THE ELECTRICAL CONTRACTOR'S RESPONSIBILITY TO RECALCULATE THE MAXIMUM CONDUIT LENGTHS.

ASSUMED VALUES USED IN CALCULATING STATED MAXIMUM CONDUIT LENGTHS:
VERTICAL DUCTS – 12'-0"
FLOOR PENETRATIONS – 3'-0"

AXIS IMAGE SYSTEM (REMOTE CONFIGURATION)

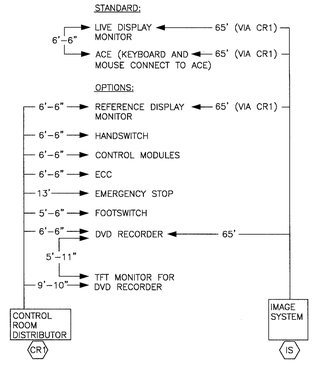

2 CONTROL ROOM SYSTEM CONNECTIONS SCALE: NONE

GROUNDING NOTES

EQUIPMENT GROUND CONDUCTOR TO COMPLY WITH THE FOLLOWING:

1) SIZED EQUIVALENT TO THE PHASE CONDUCTORS (FULL SIZED GROUND).
2) DERIVED FROM THE ELECTRICAL SERVICE, TRANSFORMER OR MAIN DISTRIBUTION PANEL FEEDING THE SIEMENS EQUIPMENT.
3) RUN IN THE SAME CONDUIT, TROUGH OR RACEWAY AS THE PHASE CONDUCTORS.
4) CONTINUOUS, WITH NO BREAKS OR USE OF CONDUIT, CHASSIS OR EARTH AS THE SOLE GROUNDING PATH.
5) BONDED TO CHASSIS AND/OR CONDUIT IN ACCORDANCE WITH THE NEC REQUIREMENTS.
6) MINIMIZE CONNECTIONS OR TERMINALS TO ENSURE CONTINUITY OVER THE LIFE OF THE INSTALLATION.
7) AS A NORM, THERE SHOULD NOT BE ANY CURRENT PRESENCE ON THE GROUND CONDUCTOR, BUT IT IS ACCEPTABLE TO HAVE <500mA DURING OPERATION OF THE IMAGING EQUIPMENT.
8) THERE MAY BE SOME APPLICATIONS WHICH REQUIRE AN ISOLATED GROUND AS PER NEC 250-96B.

POWER REQUIREMENTS

POLYDOROS-M / POLYDOROS A100 GENERATOR #1 (PU1):
480 VOLTS, 3-PHASE, 162 KVA, 100 AMPS, 60 Hz
POLYDOROS-M / POLYDOROS A100 GENERATOR #2 (PU2):
480 VOLTS, 3 PHASE, 162 KVA, 100 AMPS, 60 Hz
SYSTEM CONTROL CABINET (SC1):
480 VOLTS, 3-PHASE, 14 KVA, 50 AMPS, 60 Hz.

POWER QUALITY

POOR POWER WILL ALTER EQUIPMENT PERFORMANCE

IT IS IN THE CUSTOMER'S INTEREST THAT THE ELECTRICAL CONTRACTOR BE RESPONSIBLE FOR TESTING AND VERIFYING THAT THE EQUIPMENT POWER SUPPLY COMPLIES WITH THE SIEMENS SPECIFICATIONS.

POLYDOROS A100

X-RAY GENERATOR POWER SUPPLY REQUIREMENTS	
WIRING SYSTEM:	480Y/277V-3 PHASE-4-W, 60 HZ.
MINIMUM POWER SUPPLY:	225 KVA DISTRIBUTION XFMR
X-RAY GENERATOR NAMEPLATE MOMENTARY RATING: (RADIOGRAPHIC EXPOSURE)	162 KVA, 194 AMPS, MAXIMUM RMS (IN-RUSH) CURRENT
X-RAY GENERATOR NAMEPLATE LONG-TIME RATING: (FLUOROSCOPY)	8 KVA, 25 AMPS, FULL LOAD CURRENT
INCOMING LINE IMPEDANCE (mΩ)	≤ 120
MINIMUM CIRCUIT BREAKER SIZE: (BASED ON N.E.C. 517-73)	100 AMPS
POWER QUALITY PARAMETERS	
MAXIMUM LINE VOLTAGE VARIATION	±10% OF SYSTEM VOLTAGE
MAXIMUM ALLOWABLE MOMENTARY LINE VOLTAGE VARIATION AT GENERATOR PEAK OUTPUT OF 160 KVA:	2% OF CONNECTED LINE VOLTAGE
PHASE BALANCE:	2% MAX. BETWEEN ANY 2 PHASES
FREQUENCY VARIATION:	± 1 HZ. OF 60 HZ
VOLTAGE SURGES:	10% MAX. ABOVE CONNECTED LINE VOLTAGE *AT 20 MILLISECONDS MAXIMUM DURATION.
VOLTAGE SAGS:	10% MAX. BELOW CONNECTED LINE VOLTAGE *AT 20 MILLISECONDS MAXIMUM DURATION.
LINE TRANSIENTS (SPIKES):	50% ABOVE CONNECTED LINE VOLTAGE *AT 5 MILLISECONDS MAXIMUM DURATION.
NEUTRAL TO GROUND:	±0.5 VOLTS MAX. POTENTIAL
NEUTRAL TO GROUND SURGES:	±10 VOLTS MAX. POTENTIAL
SYSTEM GROUNDING IMPEDANCE:	0.25 OHMS MAX.

POWER SUPPLY NOTES:
1. INCOMING POWER SUPPLIES FOR SIEMENS EQUIPMENT SHOULD BE DEDICATED (BACK TO SOURCE), ISOLATED AND INSULATED FROM ANY OTHER EQUIPMENT SUCH AS ELEVATORS, GENERATORS, HVAC SYSTEMS, ETC.

2. SIEMENS MEDICAL SOLUTIONS, INC. RECOMMENDS THAT THE INCOMING POWER LINES BE ANALYZED WITH RESPECT TO TRANSIENT SURGES AND IMPULSES, SAGS AND OVERVOLTAGES.

* CONNECTED LINE VOLTAGE IS THE ACTUAL VOLTAGE MEASURED IN THE FIELD AFTER THE POWER TRANSFORMER IS CONNECTED TO ITS LIVE LOAD AND IS THE VOLTAGE USED BY SIEMENS TO CALIBRATE THE X-RAY EQUIPMENT.

ELECTRICAL NOTES

1) COMPLIANCE: ELECTRICAL WORK SHALL BE IN COMPLIANCE WITH THE LATEST EDITION OF THE NATIONAL ELECTRICAL CODE (NFPA-70), O.S.H.A. REGULATIONS, AS WELL AS APPLICABLE REGULATIONS OF CITY, COUNTY, STATE AND FEDERAL AGENCIES. PROVIDE MATERIALS AND EQUIPMENT THAT COMPLY TO ANSI, IEEE AND NEMA STANDARDS. WHERE APPLICABLE, PROVIDE ONLY MATERIALS AND PRODUCTS THAT ARE U.L. LISTED AND LABELED. CUSTOMER'S/CONTRACTOR'S WORK SHALL COMPLY WITH THE LATEST EDITION OF NECA STANDARD OF INSTALLATION.

2) QUALITY ASSURANCE: THE CONTRACTOR SHALL VERIFY EXISTING CONDITIONS IN THE FIELD TO INSURE THAT THE NEW WORK WILL FIT TO THE EXISTING STRUCTURE AS SHOWN ON THE DRAWINGS. SHOULD ANY CONDITIONS EXIST OR BE DISCOVERED THAT PREVENT THE INSTALLATION OF WORK AS SHOWN, THE CONTRACTOR SHALL NOTIFY THE OWNER'S REPRESENTATIVE PRIOR TO FABRICATION OF EQUIPMENT, OR THE PERFORMANCE OF ANY WORK THAT MAY BE AFFECTED. DO NOT ALTER DRAWINGS, DIMENSIONS, OR SPECIFICATIONS IN ANY WAY WITHOUT CONTACTING AND RECEIVING WRITTEN CONFIRMATION FROM SMS PROGRAM MANAGER. ALL DIMENSIONS ARE FROM FINISHED SURFACES. CONDUIT AND PULL BOXES TO BE INSTALLED BY THE CUSTOMER/CONTRACTOR WITH LOCATIONS BEING FIELD VERIFIED BY SMS PROJECT MANAGER.

3) POWER SUPPLY SOURCE: POWER SUPPLIES FOR SIEMENS MEDICAL SOLUTIONS EQUIPMENT SHALL BE DEDICATED SERVICES KEPT ENTIRELY FREE AND INDEPENDENT OF ALL OTHER BUILDING WIRING AND EQUIPMENT, SUCH AS: ELEVATORS, GENERATORS, PUMPS, HVAC SYSTEMS, ETC. THE CONTRACTOR SHALL COORDINATE THIS WORK WITH THE CUSTOMER/UTILITY COMPANY FIELD REPRESENTATIVE.

4) WORK FURNISHED BY CUSTOMER/CONTRACTOR: WORK NOT PROVIDED BY SIEMENS MEDICAL SOLUTIONS BUT SHOWN ON DRAWINGS TO BE FURNISHED AND INSTALLED BY CUSTOMER/CONTRACTOR INCLUDES THE FOLLOWING BUT IS NOT LIMITED TO UNLESS NOTED OTHERWISE: ELECTRICAL RACEWAYS AND DUCTS, WIRING TROUGHS, PULL BOXES, CONDUITS, CIRCUIT BREAKERS, EMERGENCY OFF BUTTONS, DOOR SWITCHES, WARNING LIGHTS, WIRING, WIRING DEVICES, CONNECTORS, LIGHTING EQUIPMENT AND GROUNDING.

5) RACEWAY AND CONDUIT NOTES: RACEWAY SHALL BE ELECTRIC METALLIC TUBING (EMT) FOR RIGID CONDUIT WORK, OR WHERE SHORT OFF-SET CONNECTIONS ARE REQUIRED LIQUIDTIGHT FLEXIBLE METAL CONDUIT SHALL BE USED. FIELD BENDS SHALL NOT BE LESS THAN AS SHOWN IN TABLE 346-10 OF THE NATIONAL ELECTRICAL CODE. PROVIDE A JETLINE "SUPER TRUE TAPE", OR EQUIVALENT CONDUIT MEASURING TAPE FISH LINE IN ALL RACEWAYS AND CONDUITS.

CONDUIT BODIES SHALL NOT BE USED. WHERE A CONDUIT ENTERS A BOX, FITTING, OR OTHER ENCLOSURE, AN INSULATED THROAT CONNECTOR SHALL BE PROVIDED TO PROTECT THE WIRE FROM ABRASION. CONNECTORS SHALL BE DOUBLE SET SCREW TYPE, STEEL CONCRETE TIGHT.

KEEP RACEWAYS AT LEAST 6 INCHES AWAY FROM PARALLEL RUNS OF FLUES OR STEAM AND HOT WATER PIPES. INSTALL RACEWAY RUNS ABOVE WATER AND STEAM PIPES PROVIDED THAT CABLE RUN DISTANCES ARE MAINTAINED. USE TEMPORARY CLOSURES TO PREVENT FOREIGN MATTER FROM ENTERING RACEWAY.

CONDUIT RUNS ARE SHOWN SCHEMATICALLY. INSTALL CONDUIT WITH A MINIMUM OF BENDS IN THE SHORTEST PRACTICAL DISTANCE CONSIDERING THE BUILDING CONSTRUCTION AND OBSTRUCTIONS, EXCEPT AS OTHERWISE INDICATED. THE CONTRACTOR SHALL MAKE CERTAIN THAT ANY CONDUIT/RACEWAY RUNS CONTAINING SIEMENS MEDICAL SYSTEMS CABLES DO NOT EXCEED THE SPECIFIED MAXIMUM DISTANCES AS SHOWN ON THE ELECTRICAL DETAILS.

PROVIDE ENCLOSED METAL RACEWAY SYSTEM (WIRE DUCT) WHERE SHOWN ON DRAWINGS WITH DIVIDERS TO SEPARATE THE DUCT (FOR POWER AND SIEMENS MEDICAL SOLUTIONS CABLING). DIVIDERS AND CROSSOVER PIECES TO BE PROVIDED AS NECESSARY. FOR UL CERTIFIED SYSTEMS, THE CABLE TO CABLE AS WELL AS THE CIRCUIT TO CIRCUIT SEPARATION REQUIREMENT WAS EVALUATED DURING THE UL SYSTEM INVESTIGATION OF THIS EQUIPMENT. ADDITIONAL SEPARATION OF THE SYSTEM CABLE ASSEMBLIES INTO SEPARATE OR PARTITIONED RACEWAYS, UNLESS OTHERWISE NOTED, IS NOT NECESSARY TO INSURE SEPARATION OF CIRCUITS, AS THEY CAN BE IN THE SAME RACEWAY.

PROVIDE WIRE DUCT/RACEWAY WITH ACCESSIBLE REMOVABLE COVERS. LOCATIONS OF OPENINGS TO BE CUT IN FIELD ARE TO BE COORDINATED WITH SIEMENS PROJECT MANAGER. ELECTRICAL PULL BOXES AND RACEWAY COVERS SHALL BE INSTALLED IN A MANNER TO ALLOW ACCESSIBILITY FOR INSTALLATION AND MAINTENANCE. IN-FLOOR TRENCH DUCT AND FLUSH FLOOR BOXES SHALL BE PROVIDED WITH FULLY GASKETED REMOVABLE COVERS.

6) WIRING: WIRING SHALL BE INSTALLED IN METAL RACEWAY, 600 VOLT CLASS, STRANDED TYPE THHN-THWN, SINGLE CONDUCTOR ANNEALED COPPER FOR A MAXIMUM OPERATING TEMPERATURE OF 75° C (165° F), SIZED AS INDICATED. THE CUSTOMER/CONTRACTOR SHALL LEAVE MINIMUM 10 FT. WIRE TAILS AT ALL OUTLET POINTS WITH WIRE IDENTIFICATION TAGGED AT BOTH ENDS FOR FINAL CONNECTION BY SIEMENS MEDICAL SOLUTIONS.

7) IN ADDITION TO THE CIRCUIT BREAKER LOAD CURRENT RATING, CONSIDERATION MUST ALSO BE GIVEN TO SELECTING CIRCUIT BREAKERS THAT HAVE A HIGH ENOUGH SHORT CIRCUIT CURRENT WITHSTAND RATING TO SAFELY COORDINATE WITH THE POWER SYSTEM AVAILABLE SHORT CIRCUIT CURRENT. GENERALLY, WHEN THE 480 VOLT, 3 PHASE, X-RAY EQUIPMENT IS SERVED FROM A POWER SUPPLY SYSTEM THAT IS PROVIDED WITH A 500 kVA OR SMALLER TRANSFORMER, A STANDARD 14,000 RMS AMPERE WITHSTAND RATED CIRCUIT BREAKER WILL BE ADEQUATE. HOWEVER, IF THE POWER SUPPLY SYSTEM TRANSFORMER IS LARGER THAN 500 kVA, THEN THE CIRCUIT BREAKERS HAVING A SHORT CIRCUIT WITHSTAND RATING GREATER THAN 14,000 RMS AMPERES MAY BE REQUIRED.

FULLY SPRINKLERED
BID DOCUMENTS
FOR CONSTRUCTION

Revisions	Date

CONSULTANTS:

ARCHITECT/ENGINEERS:

PARADIGM ENGINEERS AND CONSTRUCTORS
200 Envoy Circle #201, Louisville KY 40299 – PH: 502.339.8511 – www.paradigmusa.com

May 2015 STATE OF KENTUCKY BLAISE CASSIUS VAN GANNEKEN 34,739 LICENSED PROFESSIONAL ENGINEER

Drawing Title: ELECTRICAL DETAILS SIEMENS EQUIPMENT	Project Title: REMODEL CARDIAC CATH LAB SUITE		Project Number: 635-CS1-102
			Building Number: F
Approved Project Director	Control Number: VA256-13-C-0277	Location: OKLAHOMA CITY VAMC, 921 N.E. 13TH STREET, OKLAHOMA CITY, OK 73104	Drawing Number: E-502
	PO Number: 635-C35336	Date: 05-21-2015 / Checked: WLM / Drawn: MMF	

Office of Construction and Facilities Management
Department of Veterans Affairs

VA FORM 08-6231

GENERAL NOTES

A. THE ELECTRICAL CONTRACTOR SHALL PROVIDE EMPTY CONDUITS AS INDICATED ON SCHEDULE. ELECTRICAL CONTRACTOR SHALL PROVIDE PULL STRINGS IN ALL CONDUITS.

B. PULLING OF CABLE SHALL BE BY EQUIPMENT VENDORS. REFER TO PHILIPS VENDOR DRAWINGS ORDER NUMBER 6600223712.010000, DRAWING NUMBER N-WES140206A, SHEETS E3 AND E4 FOR WIRE TYPE AND ADDITIONAL INFORMATION.

C. ALL CONDUIT RUNS SHALL EMANATE FROM EQUIPMENT TAG AS INDICATED ON SCHEDULE.

D. REFER TO DRAWING EP101 FOR LOCATIONS OF MEDICAL EQUIPMENT.

E. MEDICAL EQUIPMENT LISTED SHALL BE PROVIDED BY MEDICAL EQUIPMENT SUPPLIER UNLESS NOTED OTHERWISE.

F. REFER TO PHILIPS VENDOR DRAWINGS FOR FURTHER INFORMATION.

PHILIPS CONDUIT ROUTING SCHEDULE - LAB 2 (WEST)

Conduit Required

General Notes

1. All conduit runs must take most direct route point to point.
2. All conduit runs must have a pull string.

- A Conduit supplied/installed by contractor - Philips cables installed by Philips
- B Conduit supplied/installed by contractor - Philips cables installed by contractor
- C Conduits and cables supplied and installed by contractor
- D Conduit existing - cables supplied and installed by Philips
- E Conduit existing - cables supplied by Philips and installed by contractor
- F Conduit existing - cables supplied and installed by contractor
- G Optional equipment, verify with local Philips Service

* **P** Power (AC), **D** Power (DC), **G** Ground, **S** Signal, **H** High Tension, **C** Cooling Hose, **A** Air Supply Hose

	Run No.	From	To	Conduit Quantity	Cable Type (*)	Minimum Conduit Size	Maximum Conduit Length	Special Requirements
C	1	Power Panel	CB	1	P	Per N.E.C.	Per N.E.C.	See conductor/ground size chart.
C	2	CB	MA	1	P	2 1/2"	Per N.E.C.	
C	3	CB	ST	1	P	3/4"	50'	
C	4	ERB	GE	1	P	3/4"	6'	
C	5	ERB	Room Outlets	1	P	3/4"	-	See Sheet "ED2" for details.
C	6	MA	WL	1	P	3/4"	55'	
C	7	ATY	DS	1	S	3/4"	55'	
A	8	ATY	MA	1	S	2 1/2"	41'	
A	9	ATY	TV	1	S	3/4"	65'	
A	10	SP	ME	2	C	1 1/2"	44'	Tube Cooling Hoses.
A	11	SP	ME	1	P/G	1 1/2"	39'	
A	12	SP	ME	1	S	1"	39'	
A	13	SP	ME	1	H	2 1/2"	37'	High Tension Cables.
A	14	SP	MP	1	P/G	2"	39'	
A	15	SP	MP	1	S	2"	39'	
A	16	SP	MA	1	S	2"	37'	
A	17	MSA	MA	1	S	2 1/2"	39'	
A	18	MSA	MP	1	P/G	2"	39'	
A	19	MSA	MP	1	S	2 1/2"	39'	
A	20	TV	MA	1	P	1 1/2"	52'	
A	21	TV	MA	1	S	2 1/2"	52'	
A	22	TV	MP	1	S	2"	52'	
A	23	TV	MB	1	S	1 1/2"	52'	For FlexVision XL.
A	24	TV	WM	1	S	3/4"	65'	For Intercom.
A	25	CY	MP	1	S	2"	50'	
A	26	CY	MA	1	P/G	1 1/2"	55'	
A	27	CY	MA	1	S	2 1/2"	55'	
A	28	MA	WM	1	S	1"	82'	
C	29	TV	WR3	2	S	1 1/2"	-	For optional equipment (IE. Physio Monitor/ Slave Monitor)
C	30	MSA	WR3	2	S	1 1/2"	-	For future options (Patient Monitoring). Verify with local Philips Service if auxiliary box should be used.

PHILIPS CONDUIT ROUTING SCHEDULE - LAB 2 (WEST) (CONTINUED)

Conduit Required

General Notes

1. All conduit runs must take most direct route point to point.
2. All conduit runs must have a pull string.

- A Conduit supplied/installed by contractor - Philips cables installed by Philips
- B Conduit supplied/installed by contractor - Philips cables installed by contractor
- C Conduits and cables supplied and installed by contractor
- D Conduit existing - cables supplied and installed by Philips
- E Conduit existing - cables supplied by Philips and installed by contractor
- F Conduit existing - cables supplied and installed by contractor
- G Optional equipment, verify with local Philips Service

* **P** Power (AC), **D** Power (DC), **G** Ground, **S** Signal, **H** High Tension, **C** Cooling Hose, **A** Air Supply Hose

	Run No.	From	To	Conduit Quantity	Cable Type (*)	Minimum Conduit Size	Maximum Conduit Length	Special Requirements
C	31	MSA	PHY	1	S	2 1/2"	-	For future options (Patient Monitoring). Verify with local Philips Service if auxiliary box should be used.
G	32	PHY	Physio Monitor	1	S	2"	33'	Optional for remote location.
G	33	Third Party	Third Party	-	-	-	-	For Injector, Auxiliary Box, Patient Monitoring, Video Networking, etc.
G	34	Third Party	ERB	-	G	-	-	For Injector, Auxiliary Box, Patient Monitoring, Video Networking, etc.
A	35	VB1	MB	1	S	1"	82'	
A	36	VB2	MB	1	S	1"	82'	
A	37	VB3	MB	1	S	1"	82'	
A	38	VB4	MB	1	S	1"	82'	
A	39	VB5	MB	1	S	1"	82'	
A	40	VB6	MB	1	S	1"	82'	
A	41	VB7	MB	1	S	1"	82'	
A	42	VB8	MB	1	S	1"	82'	
A	43	VB2	CY	1	S	1/2"	91'	
A	44	VB3	CY	1	S	1/2"	91'	
A	45	VB4	CY	1	S	1/2"	91'	
A	46	VB5	CY	1	S	1/2"	91'	
A	47	VB6	CY	1	S	1/2"	91'	
A	48	VB7	CY	1	S	1/2"	91'	
A	49	VB8	CY	1	S	1/2"	91'	
A	50	WR3	DBS	1	S	2"	-	
C	51	TR	M3	1	P	3/4"	-	For M LED 3MC Surgical Light.
G	52	M3	ERB	1	G	3/4"	-	For M LED 3MC Surgical Light. Per local code.
A	53	VB9	MB	1	P	1 1/2"	55'	Monitor on Cart.
A	54	VB9	MB	1	S	1 1/2"	55'	Monitor on Cart.
C	55	UPS	ST	1	P	3/4"	150'	
B	56	MA	UPC	1	P	1"	45'	
B	57	MA	UPC	1	P	1"	45'	
B	58	MA	UPC	1	P	1"	45'	
B	59	MA	UPC	1	P	1"	45'	
B	60	MA	SWC	1	P	1"	45'	

PHILIPS EQUIPMENT SCHEDULE - LAB 2 (WEST)

Electrical Legend

- A Furnished and installed by Philips
- B Furnished by customer/contractor and installed by customer/contractor
- C Installed by customer/contractor
- D Furnished by Philips and installed by contractor
- E Existing
- F Future
- G Optional

	Item Number	Description	Detail Sheet
B	CB	480V, 3 phase, Type D 125 A circuit breaker with long-time delay and shunt trip (e.g. Square D HDL36125 or equivalent) . Run power from breaker to "MA", leaving an 8' (2440mm) tail at "MA". See Sheet "ED1" for power quality requirements. Location per local code or owner requirements. (Not shown on plan)	ED1
B	ST	Shunt Trip (emergency off) - Large mushroom-head button on remote control station with contacts to operate feature of "CB" (if required by local code or owner, and mandatory for VA and D.O.D installations). (Not shown on plan)	
B	GE	Local building steel (i.e. structural steel, cold water pipe > 2" (50mm), ground rod). (Not shown on plan)	
B	ERB	Equi-Potential Reference Bar mounted in a 12" (305mm) W x 12" (305mm) H x 4" (105mm) D pull box with hinged cover, surface mounted to the bottom of "WR2" when possible.	ED2
D	ME, MP, MA, MB	19 1/4" (490mm) W x 67" (1705mm) H x 4" (105mm) D flanged-edge terminal wall box, surface mounted 75" (1905mm) A.F.F. to top of box. General contractor to cut top and/or bottom of box as required.	ED3
B	CY, WM, VB1	Grommet opening on "WR3". Approximate location shown is recommended and may be changed - verify relocation with local Philips Service.	
B	MSA	10" (255mm) W x 10" (255mm) L x 6" (155mm) D floor box, flush mounted with underside of AD7 Adaptation Plate.	
B	SP	18" (460mm) W x 18" (460mm) L x 6" (155mm) D ceiling box, flush mounted with removable screw-type cover plate. Provide one 3" (80mm) diameter knockout.	
B	TV	18" (460mm) W x 18" (460mm) L x 6" (155mm) D ceiling box, flush mounted with removable screw-type cover plate. Provide a 2 1/2" (65mm) round cutout (Two 2 1/2" (65mm) round cutouts are required for systems with two monitor carriages - verify with local Philips Service).	
B	WR1, WR2	10" (255mm) W x 4" (105mm) D wall raceway, surface mounted with removable screw-type cover plate. "WR1" is at finished floor. "WR2" is at 75" (1905mm) A.F.F. to bottom of raceway.	ED3
B	WR3	10" (255mm) W x 4" (105mm) D wall raceway, surface mounted with removable screw-type cover plate. "WR3" is at finished floor. "WR3" may need to be cut at the location of the "CY" connection box.	ED3
B	PHY	Stub up point for physiological monitoring cables. Run conduit to customer's physiological console location. Contact manufacturer for power requirements, etc.	
B	ATY	Auxiliary Box - 6" (155mm) W x 6" (155mm) H x 4" (105mm) D wall box, flush mounted 70" (1780mm) A.F.F. to the bottom of the box with removable screw-type cover plate. Height and location shown are recommended and may be changed - verify height and relocation with local Philips Service.	
B	WL	Warning Light - Provide a surface or flush mounted light fixture above door to indicate when X-ray is on, if required by local code or physicist of record. (Not shown on plan)	ED3
B	DS	Door Switch - 120V/5A switch limited to open when door is open. Mount in upper corner on strike side of main entry door(s) (Cooper no. 1665 or equivalent), if required by local code or physicist of record. See Sheet "ED3" diagram for connection details. (Not shown on plan)	ED3

PHILIPS EQUIPMENT SCHEDULE - LAB 2 (WEST) (CONTINUED)

Electrical Legend

- A Furnished and installed by Philips
- B Furnished by customer/contractor and installed by customer/contractor
- C Installed by customer/contractor
- D Furnished by Philips and installed by contractor
- E Existing
- F Future
- G Optional

	Item Number	Description	Detail Sheet
B	N1	RJ45 type Ethernet 10/100/1000 Mbit network connector with access to customer's network. Locate within 10' (3050mm) of network card. Network fiber optic and Ethernet cabling, connectors, wall boxes, patch panels, etc. are the responsibility of the purchaser. Philips assumes no responsibility for procurement, installation, or maintenance of these components.	
B	N2	RJ45 type Ethernet 10/100/1000 Mbit network connector. Access to customer's network via their remote access server is needed for Remote Service Network (RSN) connectivity.	N1
B	S	120V/20A dedicated duplex outlet for service in the equipment room. (Not shown on plan)	
B		120V/20A dedicated duplex outlet for each of the Video Connection Boxes. Verify electrical requirements for customer provided equipment.	
B	VB2, VB3, VB4, VB5, VB6, VB7, VB8, VB9	4" (105mm) W x 4" (105mm) H x 4" (105mm) D pull box with removable screw-type cover plate, flush mounted. Exact height to be determined. Location shown is recommended and may be changed - verify relocation with local Philips Service. LCD on cart must remain within 25' (7.62m) of "VB9".	
B		120V/20A dedicated duplex outlet for DBS (Dose Aware).	
B	DBS	4" (105mm) W x 4" (105mm) H x 4" (105mm) D pull box with removable screw-type cover plate, flush mounted. Exact height to be determined. Location shown is recommended and may be changed - verify relocation with local Philips Service.	
D	TR	4" (105 mm)W x 4" (105 mm)L x 2 1/2" (65 mm)D box for the transformer used for the M LED 3MC Surgical Light. Location to be determined locally. Recommended location is above the ceiling near the surgical light. Verify location with local Philips Service. Hardwire 115V/20A hospital power to "TR".	AD5
B	M3	4" (105 mm)W x 4" (105 mm)L x 2 1/2" (65 mm)D ceiling box, flush mounted with removable screw-type cover plate. Recommended location is near or above the cable spooler.	
B		120V/20A dedicated quadplex outlet for "TV2".	
D	UPS	UPS - 25 kVA.	ED4
D	UPC	Universal Power Controller - 25 kVA.	ED4
B	RSP	Remote Status Panel (wall mounted in the control area) - 4" (105mm) W x 4" (105mm) H x 4" (105mm) D pull box with removable screw-type cover plate, flush mounted. Exact height to be determined. Location shown is recommended and may be changed - verify relocation with local Philips Service.	ED4
B		120V/20A dedicated duplex outlet for RSP (Remote Status Panel)	
D	SWC	Knife switch. On/off 3 phase switch rate 480V 100 A with auxiliary contacts rated 1 phase 120V 4 A. Surface mounted 50" (1270mm) above finished floor to bottom of box.	ED4

See E1 - E4 sheets for conduit and raceway requirements.

three inches = one foot
one and one half inches = one foot
one inch = one foot
three quarters inch = one foot
one half inch = one foot
three eighths inch = one foot
one quarter inch = one foot
one eighth inch = one foot

FULLY SPRINKLERED
BID DOCUMENTS
FOR CONSTRUCTION

Revisions: | Date

CONSULTANTS:

ARCHITECT/ENGINEERS:

PARADIGM
ENGINEERS AND CONSTRUCTORS
200 Envoy Circle #201, Louisville KY 40299 - PH: 502.339.8511 - www.paradigmusa.com

STATE OF KENTUCKY
BLAINE CASSEL VAN GANSBEKE
24,730
LICENSED PROFESSIONAL ENGINEER

Drawing Title	PHILIPS EQUIPMENT AND CONDUIT ROUTING SCHEDULES LAB #2 - WEST
Approved Project Director	
Control Number	VA256-13-C-0277
PO Number	635-C35336
Project Title	REMODEL CARDIAC CATH LAB SUITE
Location	OKLAHOMA CITY VAMC, 921 N.E. 13TH STREET, OKLAHOMA CITY, OK 73104
Date	05-21-2015
Checked	WLM
Drawn	MMF
Project Number	635-CS1-102
Building Number	F
Drawing Number	E-601

Office of Construction and Facilities Management
Department of Veterans Affairs

VA FORM 08-6231

SIEMENS EQUIPMENT AND CONDUIT ROUTING SCHEDULE - LAB 1 (EAST)

EQUIPMENT TAG	EQUIPMENT DESCRIPTION OF EQUIPMENT	CONDUIT INFORMATION PROVIDE CONDUIT TO	CONDUIT QUANTITY	CONDUIT SIZE
B10	PULL BOX MOUNTED BELOW FINISHED FLOOR WITH REMOVABLE BOTTOM COVER. PROVIDE 4" DIAMETER SLEEVE FROM BOX TO FLUSH WITH FINISHED FLOOR. PROVIDE STAINLESS STEEL WATERPROOF PLATE ON TOP OF COVERED OPENING IN FLOOR. SIZE AS REQUIRED.			
CC	CABLE CABINET 18" X 8" BUSHED OPENING IN VERTICAL DUCT "VD1" COVER AT FLOOR LINE.			
CD1	CEILING DUCT 3-1/2" X 18" CEILING DUCT MOUNTED ABOVE FINISHED CEILING. PROVIDE DUCT WITH REMOVABLE TOP COVER AND OPENINGS AS SPECIFIED. IF REQUIRED BY LOCAL CODE, DIVIDE DUCT INTO (3) SECTIONS WITH METAL DIVIDERS. CONNECT TO VERTICAL DUCT "VD1" AS INDICATED ON PLAN.			
CRB	CONTROL ROOM UNDER-FLOOR BOX PULLBOX MOUNTED BELOW FINISHED FLOOR WITH REMOVABLE BOTTOM COVER. FOR EACH CONDUIT CONNECTION, PROVIDE A FLOOR SLEEVE OF THE SAME SIZE CONNECTING BOX TO RACEWAY "HD1" SIZE AS REQUIRED	B10	1	3"
CR1	CONTROL ROOM DISTRIBUTOR 3" DIAMETER BUSHED OPENING IN TOP OF HORIZONTAL DUCT "HD1"			
CR2	CUSTOMER EQUIPMENT 3" DIAMETER BUSHED OPENING IN TOP OF HORIZONTAL DUCT "HD1"			
CU1 CU2	KLUVER COOLING UNITS PULL BOX MOUNTED IN FINISHED WALL AT FLOOR LINE. PROVIDE BOX WITH REMOVABLE FRONT COVER AND (1) 4" DIAMETER BUSHING IN CENTER OF REMOVABLE COVER FOR CABLE EXIT. SIZE AS REQUIRED. SEE PLAN FOR LOCATION.			
D1	DCS 6" DIAMETER BUSHED OPENING IN BOTTOM OF CEILING DUCT "CD1" IF REQUIRED BY LOCAL CODE, PROVIDE 4" DIAMETER SLEEVE EXTENDING FROM DUCT TO FLUSH WITH FINISHED CEILING. PROVIDE BUSHING AT CEILING LINE.			
DS	DOOR SWITCH PROVIDED AND INSTALLED BY ELECTRICAL CONTRACTOR SEE PLAN FOR LOCATION.			
EPO	EMERGENCY POWER OFF EMERGENCY OFF BUTTONS FOR CIRCUIT BREAKERS. EPO'S MUST PREVENT RESETTING OF CIRCUIT BREAKERS WHEN IN OFF POSITION. EPO'S MUST BE RECESSED OR SHIELDED. SEE PLAN FOR LOCATIONS.	EPO	1	3/4"
HD1	HORIZONTAL WALL DUCT 3-1/2" X 10" HORIZONTAL DUCT MOUNTED ON FINISHED WALL AT FLOOR LINE. PROVIDE DUCT WITH REMOVABLE FRONT COVER. IF REQUIRED BY LOCAL CODE, DIVIDE DUCT INTO (3) SECTIONS WITH METAL DIVIDERS. CONNECT TO VERTICAL DUCT "VD2" AS INDICATED ON PLAN.			
IS	AXIS IMAGE SYSTEM 4" DIAMETER BUSHED OPENING IN VERTICAL DUCT "VD3" COVER AT FLOOR LINE			
IS2	AXIS IMAGE SYSTEM PULL BOX MOUNTED BELOW FINISHED FLOOR WITH REMOVABLE BOTTOM COVER. PROVIDE 4" DIAMETER SLEEVE FROM BOX TO FLUSH WITH FINISHED FLOOR WITH BUSHING AT FLOOR LINE. SIZE AS REQUIRED.			

SIEMENS EQUIPMENT AND CONDUIT ROUTING SCHEDULE - LAB 1 (EAST) (CONTINUED)

EQUIPMENT TAG	EQUIPMENT DESCRIPTION OF EQUIPMENT	CONDUIT INFORMATION PROVIDE CONDUIT TO	CONDUIT QUANTITY	CONDUIT SIZE
MP	BREAKER PANEL MULTI-BREAKER PANEL. SEE "POWER SCHEDULE" DETAIL ON VENDOR SHEET E-501 SIZED BY ELECTRICAL CONTRACTOR.	POWER PANEL PU1 PU2 SC1 EPO	1 1 1 1 1	2" 1-1/4" 1-1/4" 1" 3/4"
P1	FLOOR AND CEILING MOUNTED C-ARMS 8" DIAMETER BUSHED OPENING IN BOTTOM OF CEILING DUCT "CD1"	CU1	1	2-1/2"
P2	FLOOR AND CEILING MOUNTED C-ARMS 8" DIAMETER BUSHED OPENING IN BOTTOM OF CEILING DUCT "CD1"	CU2	1	2-1/2"
PU1 PU2	GENERATORS PULL BOX MOUNTED IN FINISHED WALL AT FLOOR LINE. PROVIDE BOX WITH REMOVABLE FRONT COVER WITH 4" DIAMETER BUSHED OPENING AT BOTTOM OF COVER. SIZE AS REQUIRED.			
SC1	SYSTEM CABINET PULL BOX MOUNTED IN FINISHED WALL AT FLOOR LINE. PROVIDE BOX WITH REMOVABLE FRONT COVER WITH 4" DIAMETER BUSHED OPENING AT BOTTOM OF COVER. SIZE AS REQUIRED.	WL DS CU1 CU2	1 1 1 1	3/4" 3/4" 2" 2"
SC2	SYSTEM CABINET PULL BOX MOUNTED BELOW FINISHED FLOOR WITH REMOVABLE BOTTOM COVER. PROVIDE 4" DIAMETER SLEEVE FROM BOX TO FLUSH WITH FINISHED FLOOR WITH BUSHING AT FLOOR LINE. SIZE AS REQUIRED.	T1 IS2	2 1	3" 3"
SC3	SYSTEM CABINET / TABLE PULL BOX MOUNTED BELOW FINISHED FLOOR WITH REMOVABLE BOTTOM COVER. PROVIDE 4" DIAMETER SLEEVE FROM BOX TO FLUSH WITH FINISHED FLOOR WITH BUSHING AT FLOOR LINE. SIZE AS REQUIRED.	T1 IS2	2 1	3" 3"
SU	SURGERY LIGHT - MAVIG R96 LAMP PULL BOX MOUNTED ABOVE FINISHED CEILING. CONNECT 6'-0" LONG FIXTURE WHIP (1/2" OR 3/8" GREENFIELD) WITH (3) #12, L, N, G TO BOX FOR TERMINATION TO SIEMENS EQUIPMENT AT CEILING LINE.PROVIDE 120V / 16A FACILITY POWER TO BOX. SIZE AS REQUIRED.	POWER PANEL	?	?
T1	TABLE PULL BOX MOUNTED BELOW FINISHED FLOOR WITH REMOVABLE BOTTOM COVER. PROVIDE 4" DIAMETER SLEEVE FROM BOX TO FLUSH WITH FINISHED FLOOR WITH BUSHING AT FLOOR LINE. SIZE AS REQUIRED.	B10	1	3"
VD1	VERTICAL DUCT 3-1/2" X 18" VERTICAL DUCT MOUNTED FLUSH IN FINISHED WALL. BEGIN DUCT AT FLOOR LINE AND EXTEND UP WALL ABOVE FINISHED CEILING. IF REQUIRED BY LOCAL CODE, DIVIDE DUCT INTO (3) SECTIONS WITH METAL DIVIDERS.			
VD2	VERTICAL DUCT 3-1/2" X 18" VERTICAL DUCT MOUNTED FLUSH IN FINISHED WALL. BEGIN DUCT AT FLOOR LINE AND EXTEND UP WALL ABOVE FINISHED CEILING. IF REQUIRED BY LOCAL CODE, DIVIDE DUCT INTO (3) SECTIONS WITH METAL DIVIDERS.			
WL	WARNING LIGHT WARNING LIGHT TO INDICATE "X-RAY ON" SUPPLIED AND INSTALLED BY CONTRACTOR. SEE PLAN FOR LOCATIONS.			

GENERAL NOTES

A. THE ELECTRICAL CONTRACTOR SHALL PROVIDE EMPTY CONDUITS AS INDICATED ON SCHEDULE. ELECTRICAL CONTRACTOR SHALL PROVIDE PULL STRINGS IN ALL CONDUITS.

B. PULLING OF CABLE SHALL BE BY EQUIPMENT VENDOR. REFER TO PHILIPS VENDOR DRAWINGS ORDER NUMBER 6600223712.010000, DRAWING NUMBER N-WES140206A, SHEETS E3 AND E4 FOR WIRE TYPE AND ADDITIONAL INFORMATION.

C. ALL CONDUIT RUNS SHALL EMANATE FROM EQUIPMENT TAG AS INDICATED ON SCHEDULE.

D. REFER TO DRAWING EP101 FOR LOCATIONS OF MEDICAL EQUIPMENT.

E. MEDICAL EQUIPMENT LISTED SHALL BE PROVIDED BY MEDICAL EQUIPMENT SUPPLIER UNLESS NOTED OTHERWISE.

F. REFER TO SIEMENS VENDOR DRAWINGS FOR FURTHER INFORMATION. SHEETS E-101, E-102, AND E-501.

CONTRACTOR SUPPLIED CABLES FOR SIEMENS EQUIPMENT

FROM	VIA	TO	DESCRIPTION	REMARKS
PANEL	1	MP	ELECTRICAL CONTRACTOR TO SIZE PLUS GROUND	SEE DETAIL "POWER SCHEDULE" SHEET E-501
MP	2	PU1	3#2, 1#2 GROUND AND CONNECT	SEE DETAIL "POWER SCHEDULE" SHEET E-501
MP	3	PU2	3#2, 1#2 GROUND AND CONNECT	SEE DETAIL "POWER SCHEDULE" SHEET E-501
MP	4	SC1	3#6, 1#6 NEUTRAL, 1#6 GROUND AND CONNECT	SEE DETAIL "POWER SCHEDULE" SHEET E-501
MP	5	EPO	2#12, PLUS GROUND	SEE DETAIL "POWER SCHEDULE" SHEET E-501
EPO	6	EPO	2#12, PLUS GROUND	SEE DETAIL "POWER SCHEDULE" SHEET E-501
SC1	7	WL	14-18 AWG	SEE "LIGHTING DETAIL" SHEET E-101
SC1	8	DS	3#12, PLUS GROUND	
PANEL	9	SU	EC TO SIZE	SURGERY LIGHT

SIEMENS SUPPLIED CABLES FOR SIEMENS EQUIPMENT

FROM	VIA	TO	DESCRIPTION	REMARKS
P1	10	CU1	MINIMUM BENDING RADIUS 2"	MAXIMUM LENGTH 98'
SC2	11	T1		MAXIMUM LENGTH 45'
SC1	12, "VD1"	CU1		MAXIMUM LENGTH 98'
SC1	13	IS		MAXIMUM LENGTH 32'
P2	14	CU2	MINIMUM BENDING RADIUS 2"	MAXIMUM LENGTH 82'
SC1	15, "VD1"	CU2		MAXIMUM LENGTH 98'
T1	16	B10		
CRB	17	B10	CUSTOMER PATIENT MONITORING, ETC.	
P1	"CD1", "VD1"	PU1		MAXIMUM LENGTH 52'
P1	"CD1", "VD1"	PU1	(2) HIGH VOLTAGE CABLES	MAXIMUM LENGTH 52'
P1	"CD1", "VD1"	SC1	MINIMUM BENDING RADIUS 3"	MAXIMUM LENGTH 49'
SC1	"VD1", "CD1", "VD2", "HD1"	CR1	FOR CONTROL ROOM OPTIONS, MODULES, FOOT SWITCH	MAXIMUM LENGTH 62'
SC1	UNDER CABINETS	PU1		MAXIMUM LENGTH 16'
SC1	"VD1", "CD1"	D1		MAXIMUM LENGTH 62'
IS	"VD3", "CD1"	D1		MAXIMUM LENGTH 74'
P2	"CD1", "VD1"	PU2		MAXIMUM LENGTH 49'
P2	"CD1", "VD1"	PU2	(2) HIGH VOLTAGE CABLES	MAXIMUM LENGTH 49'
P2	"CD1", "VD1"	SC3	MINIMUM BENDING RADIUS 3" ONLY WITH ARTIS dBA SYSTEM	MAXIMUM LENGTH 49'
PU2	UNDER CABINETS	PU1		MAXIMUM LENGTH 16'
LDC	"VD3", "CD1"	D1	DCS LARGE DISPLAY (STANDARD CABLE)	MAXIMUM LENGTH 82'
LDC	"VD3", "CD1", "VD1"	SC1	DCS LARGE DISPLAY (STANDARD CABLE)	MAXIMUM LENGTH 57'
LDC	"VD3"	IS	DCS LARGE DISPLAY (STANDARD CABLE)	MAXIMUM LENGTH 8'

FULLY SPRINKLERED
BID DOCUMENTS
FOR CONSTRUCTION

Revisions:	Date

CONSULTANTS:

ARCHITECT/ENGINEERS:

PARADIGM
ENGINEERS AND CONSTRUCTORS
200 Envoy Circle #201, Louisville KY 40299 – PH: 502.339.8511 – www.paradigmusa.com

STATE OF KENTUCKY
BLAISE CASSIUS VAN GANSBEKE
24,798
LICENSED
PROFESSIONAL ENGINEER
19 May 2015

Drawing Title	SIEMENS EQUIPMENT AND CONDUIT ROUTING SCHEDULE LAB #1 - EAST
Approved Project Director	
Control Number	VA256-13-C-0277
PO Number	635-C35336
Project Title	REMODEL CARDIAC CATH LAB SUITE
Location	OKLAHOMA CITY VAMC 921 N.E. 13TH STREET, OKLAHOMA CITY, OK 73104
Date	05-21-2015
Checked	WLM
Drawn	MMF
Project Number	635-CS1-102
Building Number	F
Drawing Number	E-602

Office of Construction and Facilities Management
Department of Veterans Affairs

VA FORM 08-6231

C1 EXISTING PANELS "L11A" AND "L11B" - ELECTRIC ROOM NO. 1F121
NO SCALE

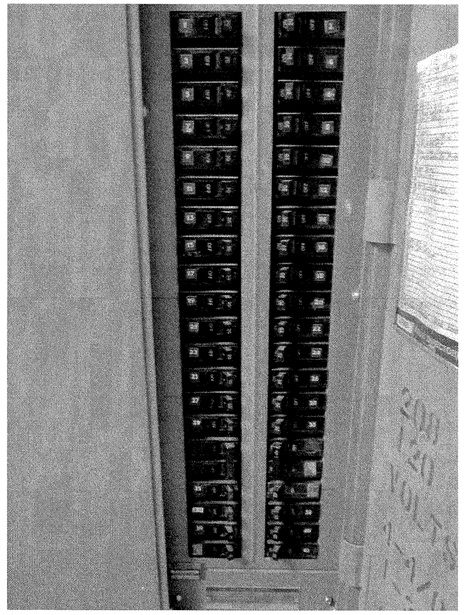

C3 EXISTING PANEL "L11B" - ELECTRIC ROOM NO. 1F121
NO SCALE

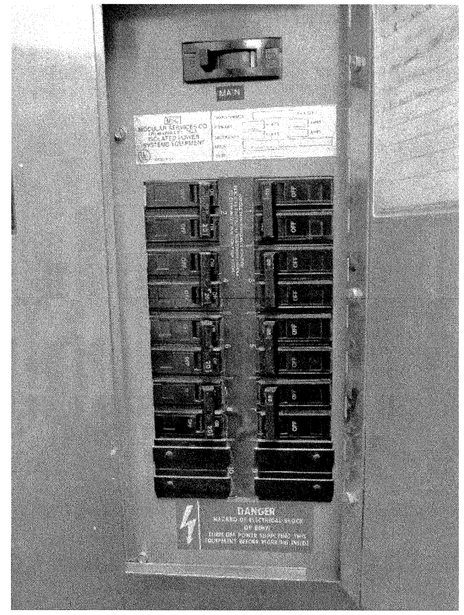

C5 EXISTING PANEL "IPU-7" TO BE REMOVED - LAB #2
NO SCALE

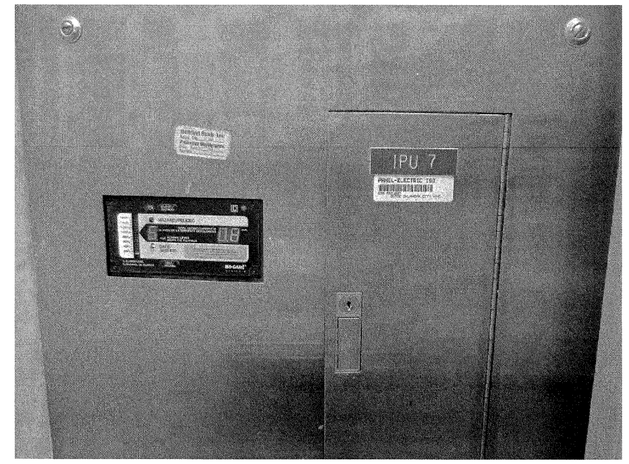

C7 EXISTING PANEL "IPU-7" TO BE REMOVED - LAB #2
NO SCALE

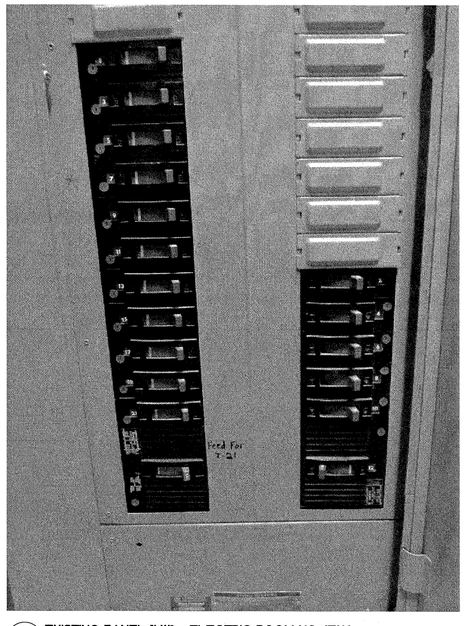

F1 EXISTING PANEL "H11" - ELECTRIC ROOM NO. 1F121
NO SCALE

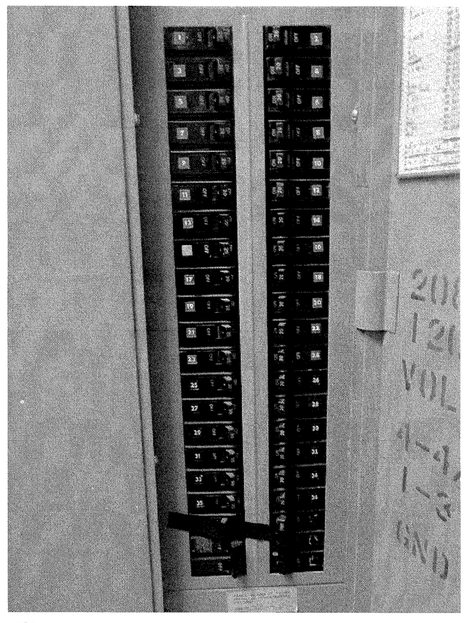

F3 EXISTING PANEL "L11A" - ELECTRIC ROOM NO. 1F121
NO SCALE

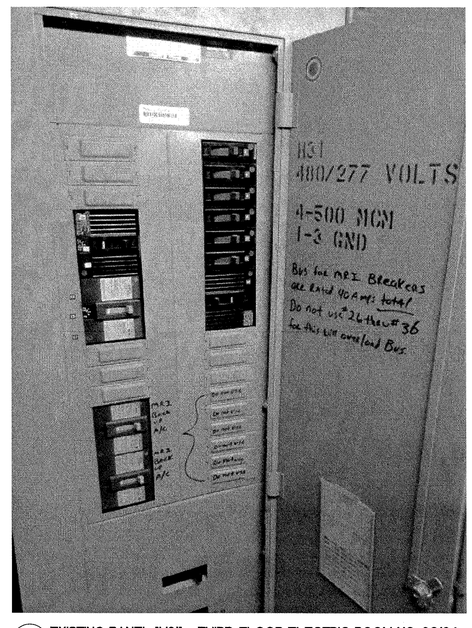

F5 EXISTING PANEL "H31" - THIRD FLOOR ELECTRIC ROOM NO. 3G104
NO SCALE

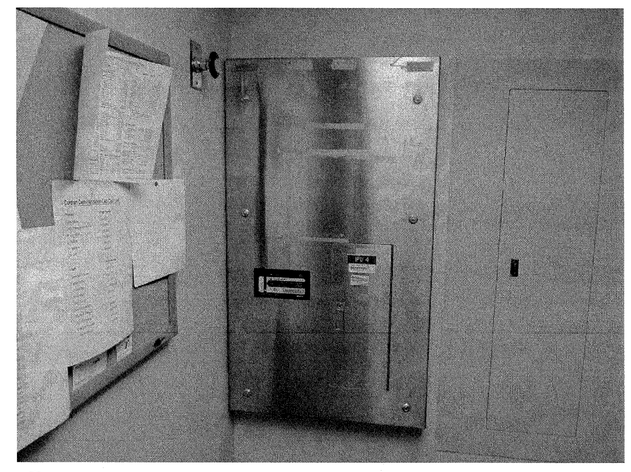

F7 EXISTING PANELS "IPU-4" AND "CB-1" TO BE REMOVED - LAB #1
NO SCALE

FULLY SPRINKLERED
BID DOCUMENTS
FOR CONSTRUCTION

Revisions	Date

CONSULTANTS:

ARCHITECT/ENGINEERS:

PARADIGM
ENGINEERS AND CONSTRUCTORS
200 Envoy Circle #201, Louisville KY 40299 – PH: 502.339.8511 – www.paradigmusa.com

STATE OF KENTUCKY
BLAIRE CARROLL VAN GAMBIENE
24,728
LICENSED
PROFESSIONAL ENGINEER
19 Mar 2015

Drawing Title: ELECTRICAL PHOTOGRAPHS	Project Title: REMODEL CARDIAC CATH LAB SUITE		Project Number: 635-CS1-102
			Building Number: F
Approved Project Director	Control Number: VA256-13-C-0277	Location: OKLAHOMA CITY VAMC, 921 NE 13TH STREET, OKLAHOMA CITY, OK 73104	Drawing Number: E-901
	PO Number: 635-C35336	Date: 05-21-2015 / Checked: WLM / Drawn: MMF	

Office of Construction and Facilities Management
Department of Veterans Affairs

VA FORM 08-6231

REFERENCE NOTES

REFER TO SHEET EL101 FOR LIGHTING WORK ON FIRST FLOOR.

REFER TO SHEETS EP101-A, EP101-B, AND EP102 FOR POWER WORK ON FIRST FLOOR.

REFER TO SHEET EP103 FOR POWER WORK AT BASEMENT LEVEL.

REFER TO SHEET EM101 FOR MECHANICAL EQUIPMENT POWER WORK ON FIRST FLOOR.

REFER TO SHEET EM102 FOR MECHANICAL EQUIPMENT POWER WORK ON THIRD FLOOR.

REFER TO SHEETS ET101 AND ET102 FOR TELECOMMUNICATIONS WORK ON FIRST FLOOR.

REFER TO SHEET EY101 FOR SYSTEMS WORK ON FIRST FLOOR.

REFER TO SHEET FA101 FOR FIRE ALARM WORK ON FIRST FLOOR..

GENERAL ELECTRICAL DEMOLITION PLAN NOTES

A. REFER TO E-001 FOR ELECTRICAL LEGEND, GENERAL NOTES, AND ABBREVIATIONS.

B. NOT ALL SYMBOLS INDICATED IN THE LEGEND, OR LISTED ABBREVIATIONS, APPEAR ON THE DRAWINGS. COORDINATE WORK ACCORDINGLY. COMPLY WITH SPECIFICATIONS AND NOTES BELOW AS APPLICABLE.

C. ALL WORK SHALL COMPLY WITH LATEST EDITION OF NFPA70, NFPA72, NFPA99, NFPA101, NEC & ALL FEDERAL, STATE & LOCAL REGULATIONS.

D. ALL PENETRATIONS THROUGH FLOORS, RATED WALLS AND PARTITIONS SHALL BE SEALED WITH UL APPROVED FIRE SEALANT MATERIAL TO MAINTAIN FIRE RATING FOR THE SEPARATION.

E. REFER TO MECHANICAL PLANS FOR EXISTING HVAC EQUIPMENT TO BE REMOVED.

F. ALL EXISTING WIRING TO DEMOLISHED DEVICES, EQUIPMENT, ETC. SHALL BE REMOVED BACK TO PANEL OR JUNCTION BOX NEAREST PANEL THAT IS REQUIRED TO REMAIN.

G. REMOVE ALL WALL BOXES AND CONDUITS IN EXTERIOR WALLS AS REQUIRED.

H. DISCONNECT AND REMOVE DEVICES, CONDUIT AND WIRING FROM DEVICE TO SOURCE, ALL DEVICES WITHIN AREA INDICATED ON DRAWING SHALL BE REMOVED. (TYPICAL)

I. ALL DEVICES SHOWN ON THIS FLOOR PLAN SHALL BE REMOVED UNLESS NOTED OTHERWISE.

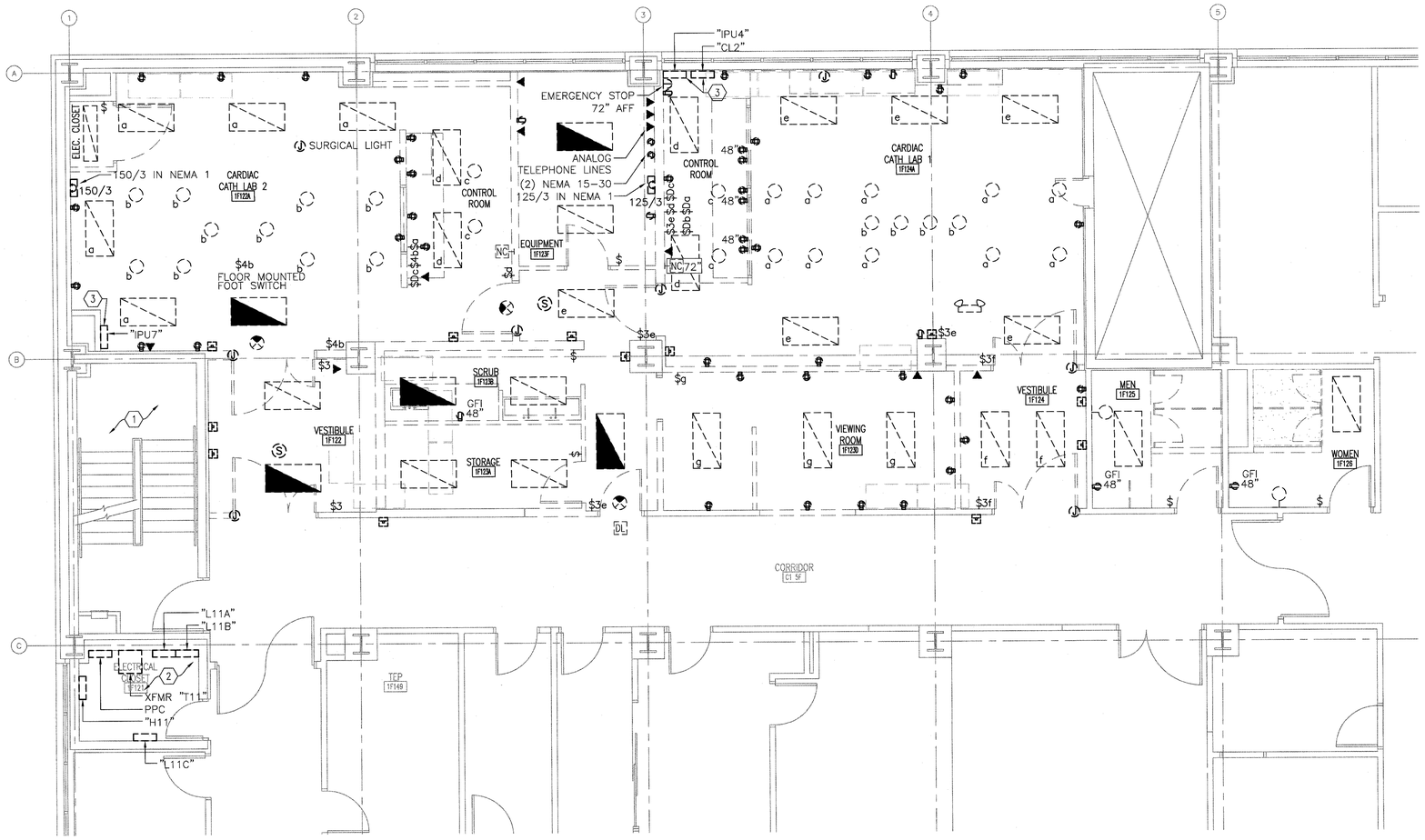

F1 PARTIAL FIRST FLOOR PLAN
SCALE 1/4" = 1'-0"

ELECTRICAL DEMOLITION PLAN NOTES

1. NO WORK IN THIS AREA.
2. ALL DEVICES LOCATED IN ELECTRICAL CLOSET NO. 1F121 ARE EXISTING TO REMAIN. REFER TO PANEL SCHEDULES ON SHEET EP603 AND RISER DIAGRAM ON SHEET EP502 FOR FURTHER INFORMATION.
3. EXISTING ELECTRICAL PANELS "CL2," "IPU4" AND "IPU7" ARE EXISTING TO BE RELOCATED. SEE SHEET EP101 FOR NEW LOCATIONS.

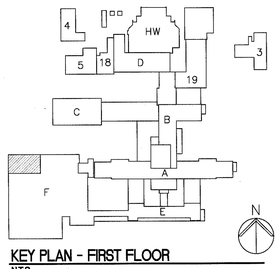

KEY PLAN - FIRST FLOOR
N.T.S.

FULLY SPRINKLERED
BID DOCUMENTS
FOR CONSTRUCTION

Revisions	Date

CONSULTANTS:

ARCHITECT/ENGINEERS:

PARADIGM
ENGINEERS AND CONSTRUCTORS
200 Envoy Circle #201, Louisville KY 40299 – PH: 502.339.8511 – www.paradigmusa.com

19 March 2015
STATE OF KENTUCKY
BLAIRE CARREL VAN GANSBEKE
24,768
LICENSED PROFESSIONAL ENGINEER

Drawing Title	ELECTRICAL DEMOLITION PLAN FIRST FLOOR
Project Title	REMODEL CARDIAC CATH LAB SUITE
Project Number	635-CS1-102
Building Number	F
Approved Project Director	
Control Number	VA256-13-C-0277
PO Number	635-C35336
Location	OKLAHOMA CITY VAMC, 921 N.E. 13TH STREET, OKLAHOMA CITY, OK 73104
Date	05-21-2015
Checked	WLM
Drawn	MMF
Drawing Number	ED101

Office of Construction and Facilities Management
Department of Veterans Affairs

VA FORM 08-6231

REFERENCE NOTES

REFER TO SHEER ED101 FOR DEMOLITION WORK ON FIRST FLOOR.

REFER TO SHEETS EP101–A, EP101–B, AND EP102 FOR POWER WORK ON FIRST FLOOR.

REFER TO SHEET EP103 FOR POWER WORK AT BASEMENT LEVEL.

REFER TO SHEET EM101 FOR MECHANICAL EQUIPMENT POWER WORK ON FIRST FLOOR.

REFER TO SHEET EM102 FOR MECHANICAL EQUIPMENT POWER WORK ON THIRD FLOOR.

REFER TO SHEETS ET101 AND ET102 FOR TELECOMMUNICATIONS WORK ON FIRST FLOOR.

REFER TO SHEET EY101 FOR SYSTEMS WORK ON FIRST FLOOR.

REFER TO SHEET FA101 FOR FIRE ALARM WORK ON FIRST FLOOR..

ELECTRICAL PANEL NOTES

CIRCUITS UTILIZED FOR NORMAL POWER SHALL ORIGINATE FROM EXISTING ELECTRICAL PANEL "L11C" LOCATED IN ROOM NO. 1F121.

CIRCUITS UTILIZED FOR LIFE SAFETY POWER SHALL ORIGINATE FROM NEW ELECTRICAL PANEL "L12LS" LOCATED IN ROOM NO. 1F121.

CIRCUITS UTILIZED FOR CRITICAL POWER SHALL ORIGINATE FROM EXISTING ELECTRICAL PANEL "L12CR" LOCATED IN ROOM NO. 1F185B.

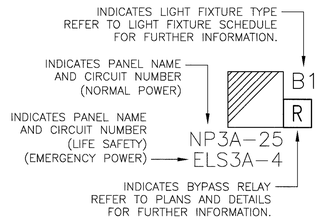

A7 EMERGENCY LIGHT FIXTURE DETAIL
SCALE: NOT TO SCALE

GENERAL ELECTRICAL LIGHTING PLAN NOTES

A. REFER TO E–001 FOR ELECTRICAL LEGEND, GENERAL NOTES, AND ABBREVIATIONS.

B. ALL LIGHTING SWITCHES SHALL BE INSTALLED AT 48" A.F.F. UNLESS OTHERWISE NOTED.

C. MOUNT OCCUPANCY SENSORS IN CENTER OF CEILING TILE.

D. CIRCUIT NUMBERS SHOWN NEXT TO LIGHTING CONTROLS OR LUMINAIRES INDICATE PANEL NAME AND CIRCUIT USED TO POWER LIGHTING IN THE AREA SHOWN.

E. ALL CONDUIT SHALL BE 3/4" CONDUIT MINIMUM.

F. REFER TO LUMINAIRE SCHEDULE ON DRAWING EL501 FOR MANUFACTURER AND MODEL NUMBERS OF LUMINAIRES.

G. CIRCUIT NUMBERS SHOWN FOR REFERENCE ONLY, COORDINATE EXACT CIRCUIT NUMBERS AT SITE.

H. COORDINATE EXACT LOCATIONS OF VENDOR EQUIPMENT WITH VENDOR AT SITE PRIOR TO INSTALLATION.

I. LIGHT FIXTURE TYPES "E" AND "E1" SHALL BE MANUFACTURED BY COOPER LIGHTING. SEE SHEET EL501 FOR FURTHER INFORMATION.

ELECTRICAL PLAN NOTES

1. PROVIDE MOMENTARY CONTACT SWITCH AS INDICATED. REFER TO DETAIL B1/EL502 FOR FURTHER INFORMATION.
2. PROVIDE "X–RAY IN USE" LIGHT AS INDICATED. REFER TO LUMINAIRE SCHEDULE ON DRAWING EL501 FOR FURTHER INFORMATION. LIGHT FIXTURE SHALL BE CONTROLLED VIA VENDOR CONTROL PANEL. REFER TO DETAIL F1/EL502 FOR FURTHER INFORMATION.
3. PROVIDE 24VAC RELAY MOUNTED ABOVE THE ACCESSIBLE CEILING SPACE. REFER TO DETAIL F1/EL502 FOR FURTHER INFORMATION.
4. PROVIDE 120VAC RELAY MOUNTED ABOVE THE ACCESSIBLE CEILING SPACE. REFER TO DETAIL D1/EL502 FOR FURTHER INFORMATION.
5. MAIN CONTROL PANEL "40E". REFER TO VENDOR DRAWINGS FROM PHILIPS AND DETAILS ON DRAWING EL502 FOR FURTHER INFORMATION.
6. CENTER TYPE "C" LIGHT FIXTURE ABOVE SINK.
7. REFER TO WIRING DIAGRAM D8/EL501 AND F8/EL501 FOR FURTHER INFORMATION.
8. PROVIDE LOCKED HANDLE CIRCUIT BREAKER IN PANEL.
9. ROUTE CIRCUITING TO EXISTING PANEL AS INDICATED. CONNECT TO EXISTING SPARE CIRCUIT BREAKER IN PANEL.
10. PROVIDE BYPASS SWITCH MANUFACTURED BY FUNCTIONAL DEVICES, INC. UL LISTED UL924 MODEL NO. ESRBE01CC (BASIS OF DESIGN OR EQUAL) SHALL COMPLY WITH NEC 700.3. MOUNT DEVICE AT LUMINAIRE. REFER TO DETAIL D5/EL501 FOR FURTHER INFORMATION.
11. LIGHTING IN LAB #1 SHALL BE CONTROLLED BY SIEMENS CONTROL PANEL "SC1". REFER TO DETAIL D7/EL502 AND SIEMENS VENDOR DRAWINGS FOR FURTHER INFORMATION.
12. LIGHTING IN LAB #2 SHALL BE CONTROLLED BY PHILIPS CONTROL PANEL "MA". REFER TO DETAILS B1/EL502 D1/EL502 AND F1/EL502 AND PHILIPS VENDOR DRAWINGS FOR FURTHER INFORMATION.
13. PROVIDE 24VAC MOUNTED RELAY MOUNTED ABOVE THE ACCESSIBLE CEILING SPACE. REFER TO DETAIL D7/EL502 FOR FURTHER INFORMATION.
14. PROVIDE MOMENTARY CONTACT SWITCH TO OPERATE LIGHT FIXTURES. REFER TO DETAIL D7/EL502 FOR FURTHER INFORMATION.
15. PROVIDE "X–RAY IN USE" LIGHT AS INDICATED, REFER TO LUMINAIRE SCHEDULE ON SHEET EL501 FOR FURTHER INFORMATION. LIGHT FIXTURE SHALL BE CONTROLLED BY VENDOR CONTROL PANEL. REFER TO DETAIL D7/EL502 FOR FURTHER INFORMATION.

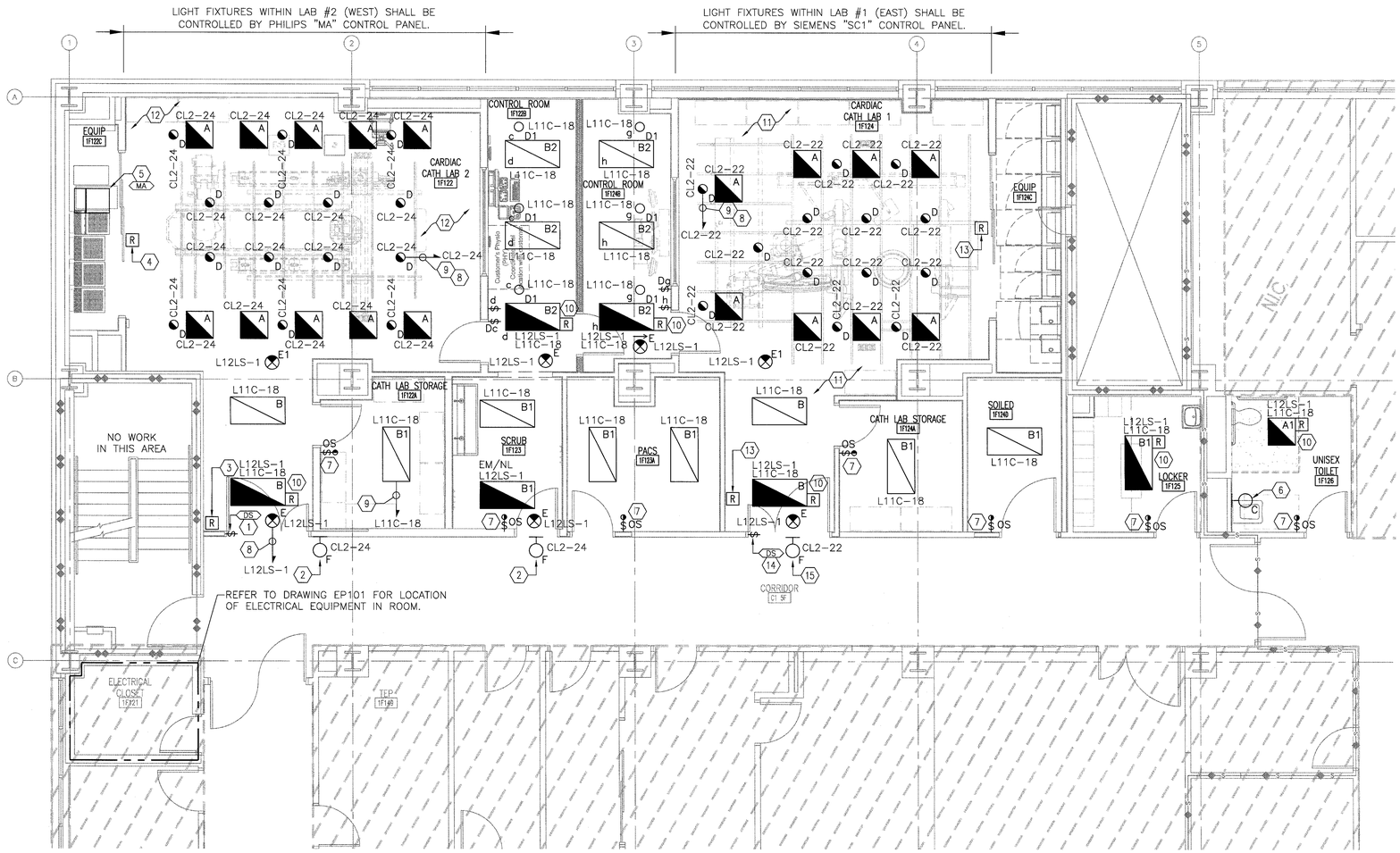

F1 PARTIAL FIRST FLOOR PLAN
SCALE 1/4" = 1'-0"

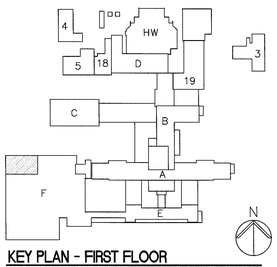

KEY PLAN - FIRST FLOOR
N.T.S.

FULLY SPRINKLERED
BID DOCUMENTS
FOR CONSTRUCTION

Revisions	Date

CONSULTANTS:

ARCHITECT/ENGINEERS:

PARADIGM
ENGINEERS AND CONSTRUCTORS
200 Envoy Circle #201, Louisville KY 40299 – PH: 502.339.8511 – www.paradigmusa.com

STATE OF KENTUCKY
BLAIRE CASSEL VAN GAMBRIEKE
24,759
LICENSED PROFESSIONAL ENGINEER
May 21, 2015

Drawing Title: ELECTRICAL LIGHTING PLAN FIRST FLOOR	Project Title: REMODEL CARDIAC CATH LAB SUITE		Project Number: 635-CS1-102
			Building Number: F
Approved Project Director	Control Number: VA256-13-C-0277	Location: OKLAHOMA CITY VAMC, 921 NE 13TH STREET, OKLAHOMA CITY, OK 73104	Drawing Number: EL101
	PO Number: 635-C35336	Date: 05-21-2015 / Checked: WLM / Drawn: MMF	

Office of Construction and Facilities Management
Department of Veterans Affairs

VA FORM 08–6231

LUMINAIRE SCHEDULE

ITEM	DESCRIPTION	LAMPS	INPUT WATTS	MOUNTING	VOLTAGE
A	2x2 LAY-IN LENSED TROFFER LIGHT FIXTURE 20 GUAGE CRS, HOLE FREE SEAM WELDED CONSTRUCTIONM WHITE TGIC POLYESTER POWDER COAT WHITE FINISH, 5-STAGE PRE-TREATMENT SALT SPRAY TEST OF 1,000 HOURS, 18 GUAGE CRS MITERED AND WELDED CORNERS THEN SPOT WELDED BEFORE PAINTING, LENS SHALL BE CLEAR ACRYLIC, WITH SILICONE GASKET, LENS SHALL BE (2) PIECE DESIGN, EXTERIOR SHALL BE .125" CLEARACRYLIC AND INTERIOR IS .30" THICK NICRO LINEAR PRISM, STAINLESS STEEL MESH FILTER.	LED INCLUDED 4,000K 80 CRI 8,066 LUMENS	100 WATTS	LAY-IN	120
A1	2 X 2 DIRECT / INDIRECT LIGHT FIXTURE 20 GUAGE CRS, POLYESTER POWDER COAT WHITE IN COLOR, CONSTANT CLASS 2 DRIVER, CENTER BASKET MOUNT OF LED LAMPS, WHITE PERFORATED WHITE CENTER BASKET. ALL PARTS PAINTER AFTER FABRICATION. 0 TO 10 VOLT DIMMING DRIVER	LED INCLUDED 4,000K 80 CRI 2,500 LUMENS	38 WATTS	LAY-IN	120
B	2 X 4 DIRECT / INDIRECT LIGHT FIXTURE 20 GUAGE CRS, POLYESTER POWDER COAT WHITE IN COLOR, CONSTANT CLASS 2 DRIVER, CENTER BASKET MOUNT OF LED LAMPS, WHITE PERFORATED WHITE CENTER BASKET. ALL PARTS PAINTER AFTER FABRICATION.	LED INCLUDED 3,500K 4,900 LUMENS 80 CRI	50 WATTS	LAY-IN	120
B1	2 X 4 DIRECT / INDIRECT LIGHT FIXTURE 20 GUAGE CRS, POLYESTER POWDER COAT WHITE IN COLOR, CONSTANT CLASS 2 DRIVER, CENTER BASKET MOUNT OF LED LAMPS, WHITE PERFORATED WHITE CENTER BASKET. ALL PARTS PAINTER AFTER FABRICATION.	LED INCLUDED 3,500K 3,500 LUMENS 80 CRI	41 WATTS	LAY-IN	120
B2	2 X 4 DIRECT / INDIRECT LIGHT FIXTURE 20 GUAGE CRS, POLYESTER POWDER COAT WHITE IN COLOR, CONSTANT CLASS 2 DRIVER, CENTER BASKET MOUNT OF LED LAMPS, WHITE PERFORATED WHITE CENTER BASKET. ALL PARTS PAINTER AFTER FABRICATION. 0 TO 10 VOLT DIMMING DRIVER	LED INCLUDED 3,500K 2,500 LUMENS 80 CRI	41 WATTS	LAY-IN	120
C	STAINLESS STEEL LED MIRROR LIGHT FIXTURE ONE PIECE 18 GUAGE, CRS, CORNERS CONTINUOUS SEAM WELDED AND SMOOTH, TGIC POLYESTER POWDER COAT GRAY, FIVE STAGE PRE-TREATMENT, SALY SPRAY TEST, 1,000 HOURS 304 STAINLESS STEEL WITH BRUSHED FINISH, 45 DEGREE BEVELED PERIMITER CONSTRUCTION WITH WELDED CORNERS, DOOR FRAME IS CONTINUOUS HINGE, .125: THICK ACRYLIC LENS, SILICONE SEALED DOOR FRAME TO HOUISNG OF LIGHT FIXTURE, CONTINUOUS SEALED.	LED INCLUDED 3,000K	38 WATTS	SURFACE WALL	120
D	RECESSED CAN DOWN LIGHT, 6" DIAMETER, LED LIGHT SOURCE, HOUSING SHALL BE .50" AL. SEAM WELDED CONSTRUCTION, REFLECTOR SHALL SPUN ALUMINUM WITH EFFECIENCY DIFFUSE WHITE COATING, TRIM SHALL BE 18 GUAGE CRS, TGIC POLYESTER POWDER COAT WHITE IN COLOR, ANTIMICROBIAL FINISH, TRIM SECURED TO HOUSING WITH CAPTIVE FLUSH MOUNTED PHILLIPS HEAD STAINLESS STEEL FASTENERS, STAINLESS STEEL MESH FILTER REDUCES RADIANT EMMISIONS. 0 TO 10 VOLT DIMMABLE DRIVER STANDARD.	LED INCLUDED 4,000K 80 CRI	26 WATTS	RECESSED	120
D1	RECESSED CAN DOWN LIGHT, 6" DIAMETER, LED CLEAR ALZAK FINISH, SPUN ALUMINUM REFLECTOR WHITE TRIM RING, OPEN REFLECTOR, 0 TO 10 VOLT DIMMING DRIVER, DIE-CAST ALUMINUM HOUSING UL DAMP LISTED.	LED INCLUDED 4,000K 80 CRI	26 WATTS	RECESSED	120
E	SINGLE FACE EXIT SIGN, EDGE LIT EXIT SIGN DIE-CAST ALUMINUM HOUSING WHITE IN COLOR RED STENCIL, AC POWERED ONLY, NO BATTERY, UNIVERSAL MOUNTING SYSTEM, REFER TO FLOOR PLAN FOR LOCATION OF KNOCK-OUT ARROWS. FIXTURE STYLE SHALL MATCH EXISTING STANDARD IN VA, COORDINATE STYLE WITH VA PRIOR TO BID.	LED INCLUDED	2 WATTS	UNIVERSAL	120
E1	SINGLE FACE EXIT SIGN, EDGE LIT EXIT SIGN UL WET LISTED ONE PIECE DIE-FORMED 16 GUAGE MATERIAL, CORNERS CONTINUOUSLY SEAM WELDED AND SMOOTH, WITH NO POST GRINDING, 5 STAGE PRE-TERATMENT SALT SPRAY TEST OF 1,000 HOURS, 18 GUAGE FIXTURE STYLE SHALL MATCH EXISTING STANDARD IN VA, COORDINATE STYLE WITH VA PRIOR TO BID.	LED INCLUDED	2 WATTS	UNIVERSAL	120
F	IN USE LIGHT FIXTURE, LED LIGHT SOURCE HIGH IMPACT POLYCARBONATE HOUSING, UL WET LISTED, WHITE HOUSING RED STENCIL, FOUR PIN FASTENERS SECURED TO WALL, WALL MOUNTED SYSTEM, INDIRECT LIGHT FIXTURE, COLOR SELECTED BY OWNER IF DESIRED COLOR OTHER THAN COLOR SPECIFIED, E.C. TO COORDINATE WITH OWNER.	LED INCLUDED 4,000K 80 CRI	20 WATTS	SURFACE WALL	120

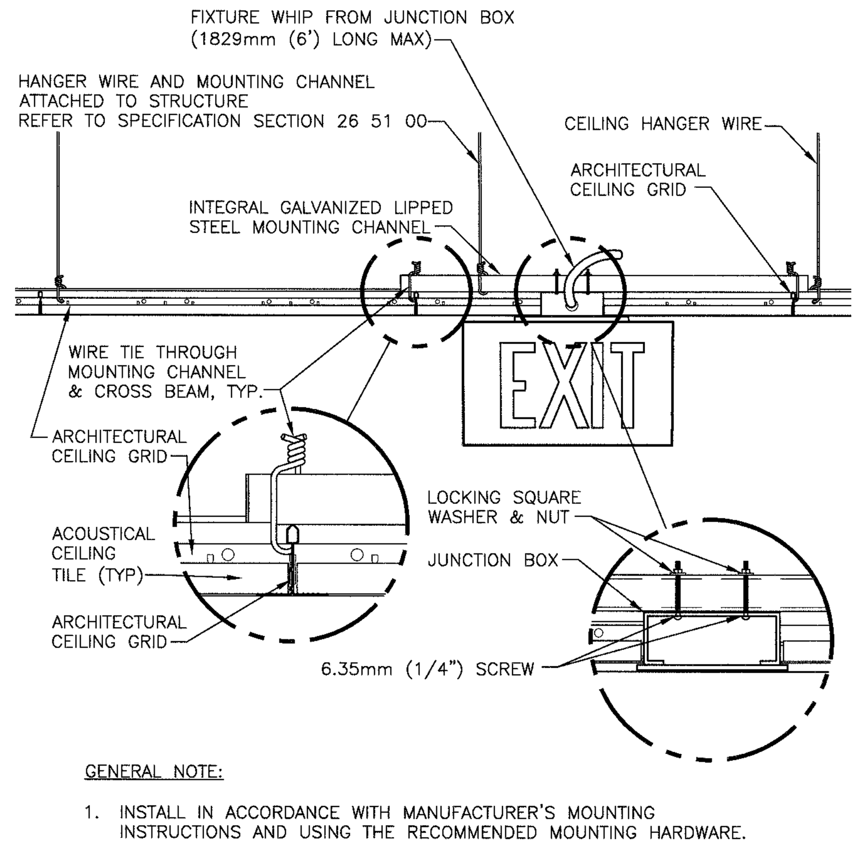

GENERAL NOTE:

1. INSTALL IN ACCORDANCE WITH MANUFACTURER'S MOUNTING INSTRUCTIONS AND USING THE RECOMMENDED MOUNTING HARDWARE.

B4 EXIT SIGN MOUNTING - LAY-IN CEILING
NTS

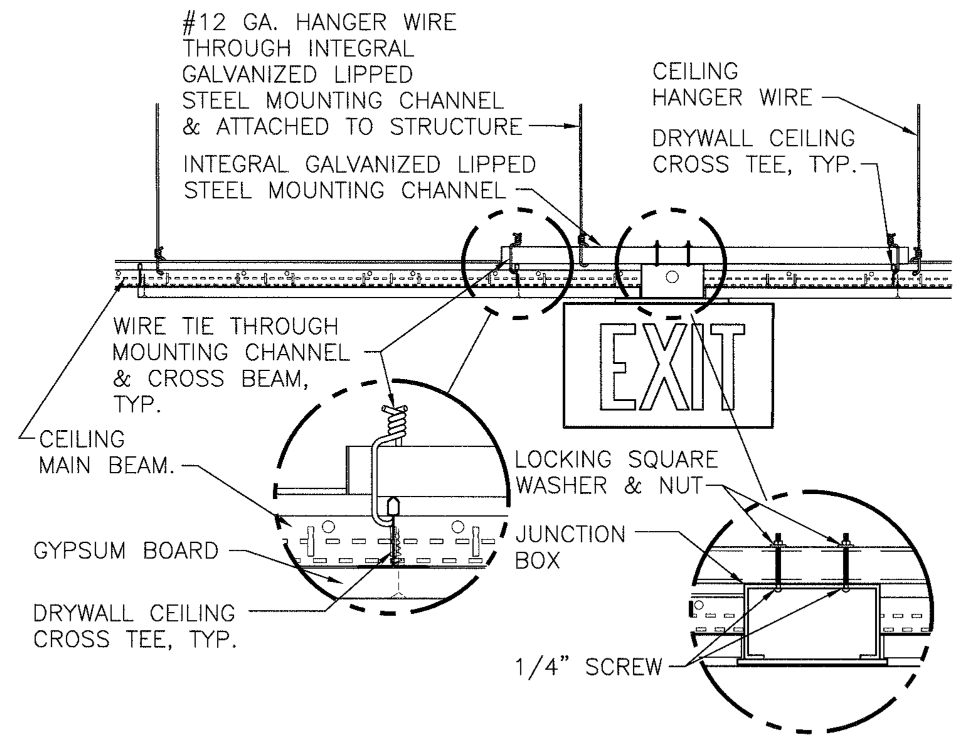

B6 EXIT SIGN MOUNTING - GYPBOARD CEILING
NOT TO SCALE

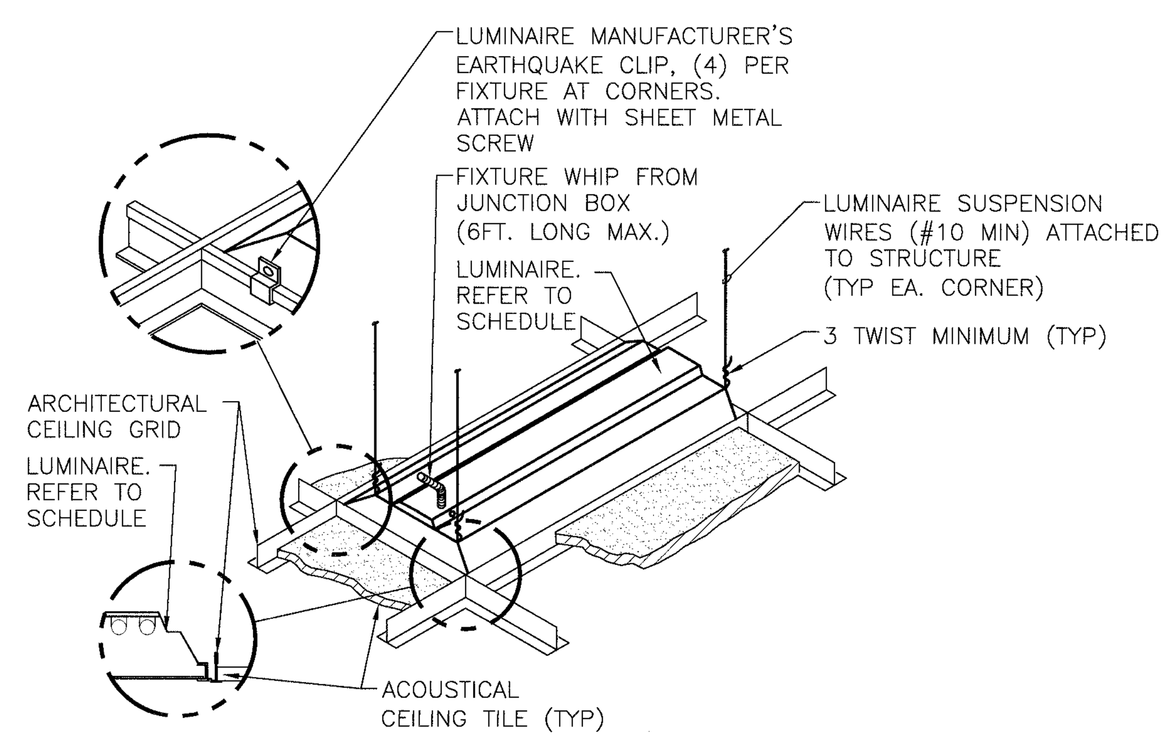

D3 LUMINAIRE MOUNTING - LAY-IN CEILING
NOT TO SCALE

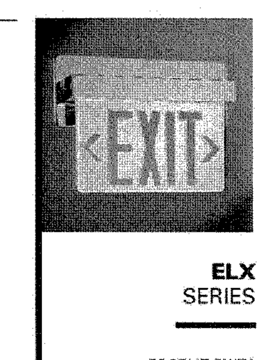

COOPER LIGHTING - SURE-LITES®

DESCRIPTION

The Sure-Lites ELX Series Recessed Exits are designed for architectural excellence and minimal presence. The crystal clear wedge shaped panel allows architectural details to shine through while providing excellent light distribution and exit visibility.

Catalog #		Type
Project		
Comments		Date
Prepared by		

SPECIFICATION FEATURES

Electrical
- Dual Voltage Input, 120/277 VAC or 120/347 VAC, 60Hz
- Long-life energy efficient LED lamps

2C Option
- Exits with 2C option are intended to be connected simultaneously to normal and emergency power circuits. UL Listed in category FTBR

Housing Construction
- 20-gauge steel housing with nine conduit knockouts
- Recessed housing available for ceiling, wall or end mounting
- Adjustable hanger bars
- Modular connectors facilitate installation and maintenance

Trim/Housing Plate
- Injection molded high-impact acrylic panel
- NFPA 101 compliant chevron directional indicators (when specified)
- Die cast trim plate in Brushed Aluminum (standard), Brass, Chrome, White, Black and Bronze
- Red or green letter colors
- Clear, mirror, or white insert background
- Mirror background standard on double face exits
- Molded letters and chevrons improve aesthetic appearance and increase visibility
- Torsion springs secure trim plate to housing - no visible mounting hardware
- Easily removable electronics tray

Code Compliance
- UL 924 Listed
- Damp Location Listed
- Life Safety NFPA 101
- NEC/OSHA
- Most State and Local Codes
- UL FTBR Listed with 2C Option

Warranty
- Exit: 1-year

Lamp Data
- AC LED, Red: 56 super-bright, long-life LEDs provide uniform illumination
- AC LED, Green: 96 super-bright, long-life LEDs provide uniform illumination

TOTALLY PREDICTABLE RELIABILITY

ELX SERIES

EDGELIT EXITS
AC ONLY
LED LAMPS
EXIT LIGHTING

ORDERING INFORMATION

CHEVRON CONFIGURATION

ENERGY DATA

COOPER Lighting www.cooperlighting.com

Specifications and dimensions subject to change without notice.
Consult your representative for additional options and finishes.

ADX041053 pc
2011-07-07 16:04:33

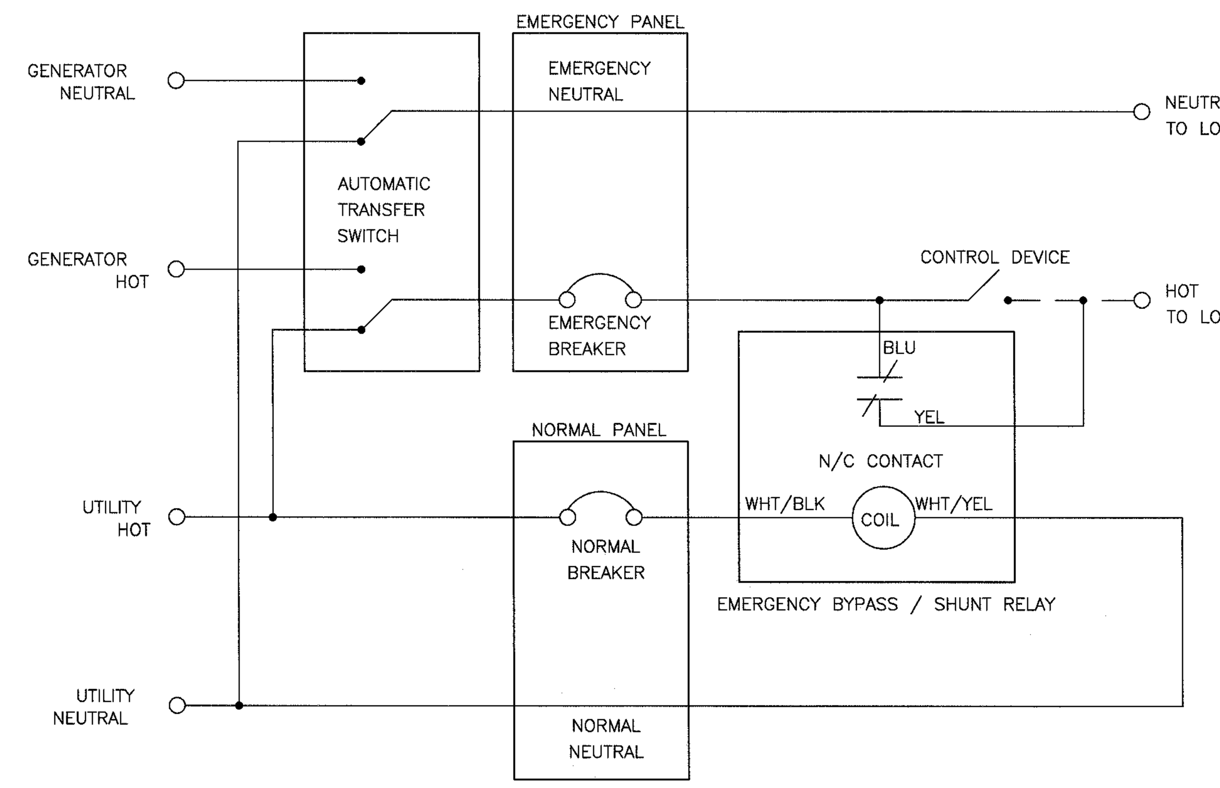

D5 EMERGENCY LIGHTING TRANSFER SWITCH DETAIL
NOT TO SCALE

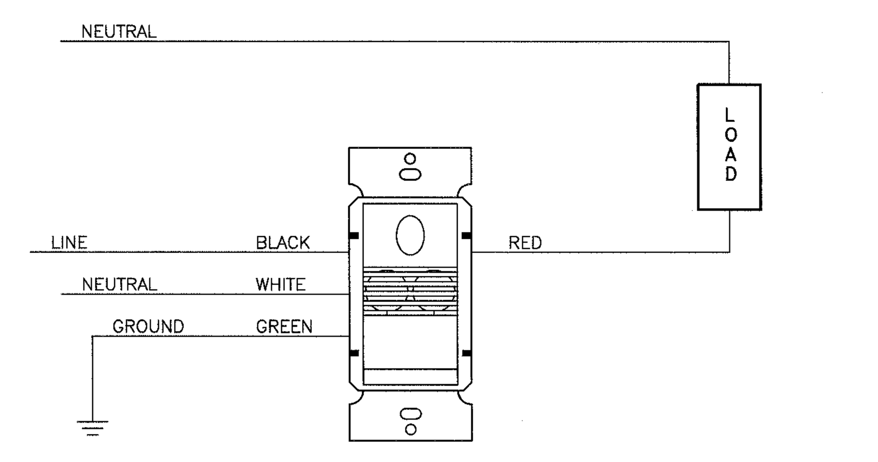

D8 WALL MOUNTED OCCUPANCY SENSOR DETAIL
NOT TO SCALE

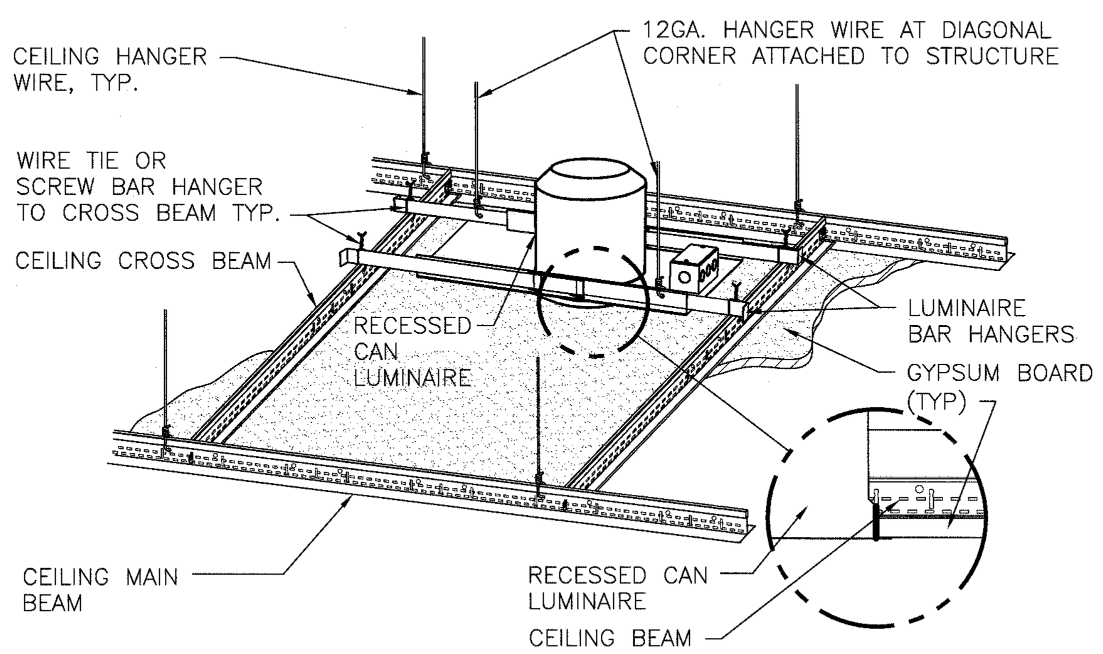

D5 DOWNLIGHT MOUNTING - GYPBOARD CEILING
NOT TO SCALE

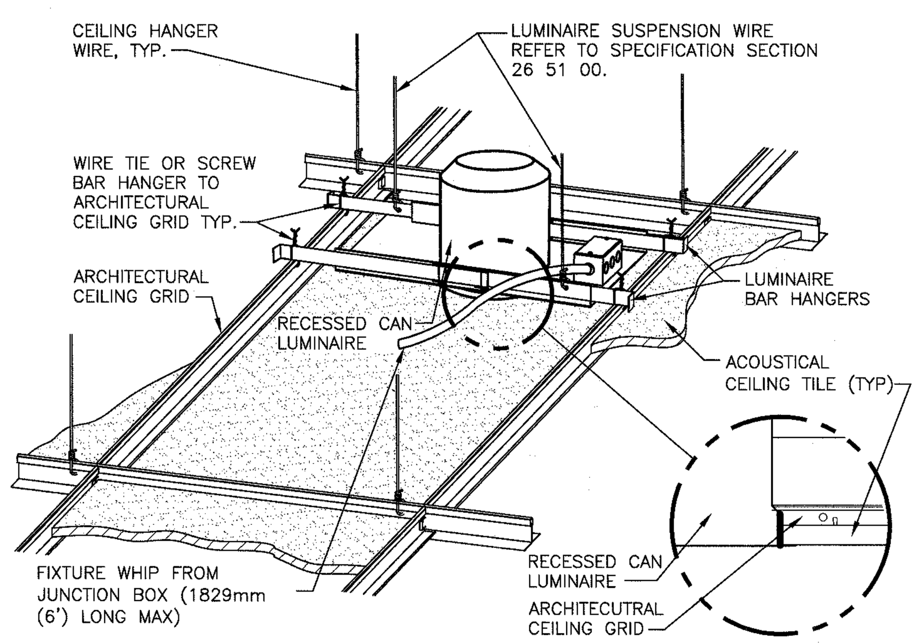

GENERAL NOTE:

1. INSTALL IN ACCORDANCE WITH MANUFACTURER'S MOUNTING INSTRUCTIONS AND USING RECOMMENDED MOUNTING HARDWARE

F6 DOWNLIGHT MOUNTING - LAY-IN CEILING
NTS

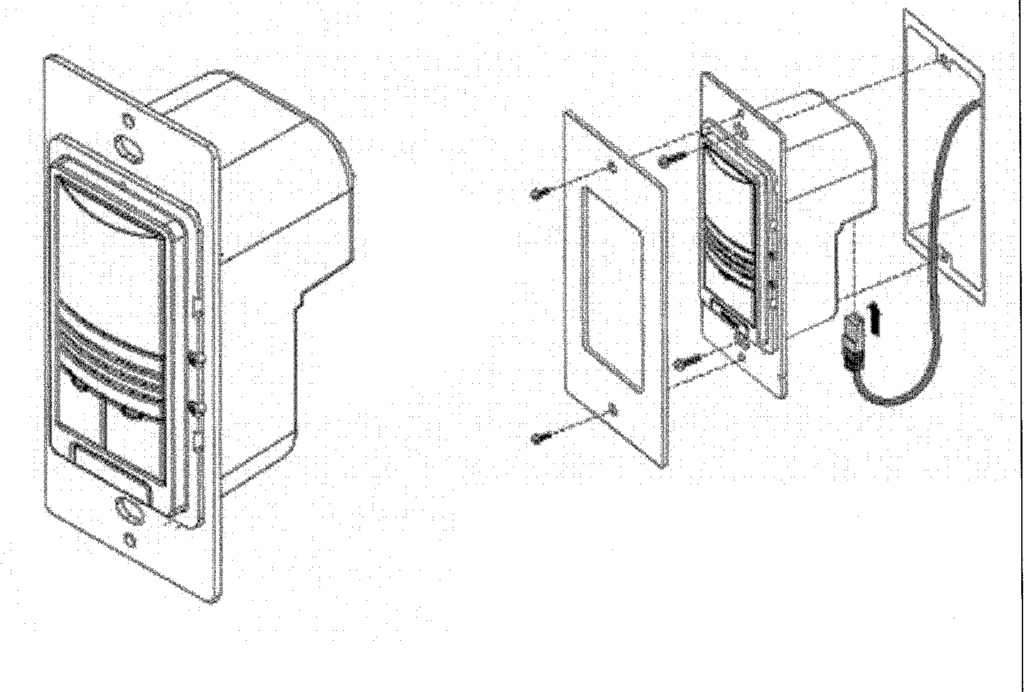

F8 WALL MOUNTED OCCUPANCY SENSOR - MOUNTING DETAIL
NOT TO SCALE

FULLY SPRINKLERED
BID DOCUMENTS
FOR CONSTRUCTION

Revisions:	Date

CONSULTANTS:

ARCHITECT/ENGINEERS:

PARADIGM ENGINEERS AND CONSTRUCTORS
200 Envoy Circle #201, Louisville KY 40299 – PH: 502.339.8511 – www.paradigmusa.com

19 May 2015 — STATE OF KENTUCKY — BLAINE CASSEL VAN GANSBEKE 24,738 — LICENSED PROFESSIONAL ENGINEER

Drawing Title: ELECTRICAL LIGHTING DETAILS AND SCHEDULES	Project Title: REMODEL CARDIAC CATH LAB SUITE	Project Number: 635-CS1-102	Office of Construction and Facilities Management
		Building Number: F	
Approved Project Director / Control Number: VA256-13-C-0277 / PO Number: 635-C35336	Location: OKLAHOMA CITY VAMC, 921 NE 13TH STREET, OKLAHOMA CITY, OK 73104	Drawing Number: EL501	Department of Veterans Affairs
	Date: 05-21-2015 / Checked: WLM / Drawn: MMF		

VA FORM 08-6231

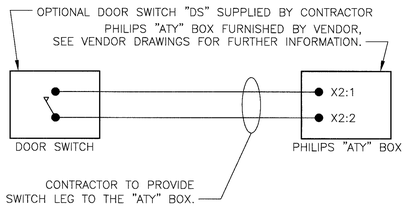

B1 OPTIONAL DOOR SWITCH DETAIL (PHILIPS LAB #2)
NOT TO SCALE

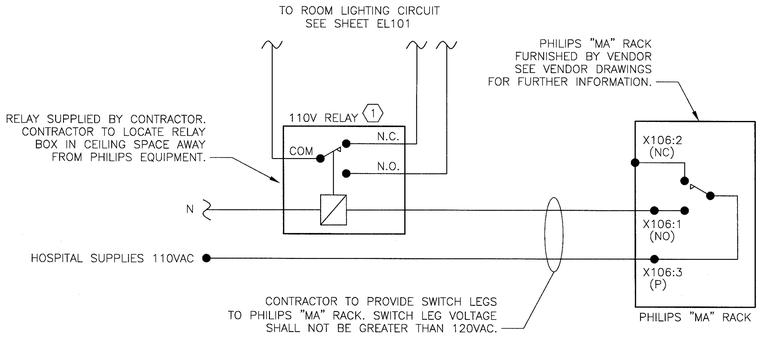

D1 GENERAL LIGHTING CONTROL DETAIL (PHILIPS LAB #2)
NOT TO SCALE

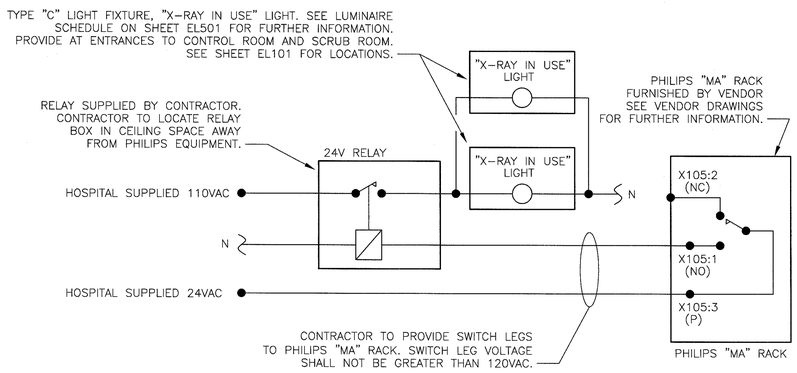

F1 'X-RAY IN USE' LIGHT CONTROL DETAIL (PHILIPS LAB #2)
NOT TO SCALE

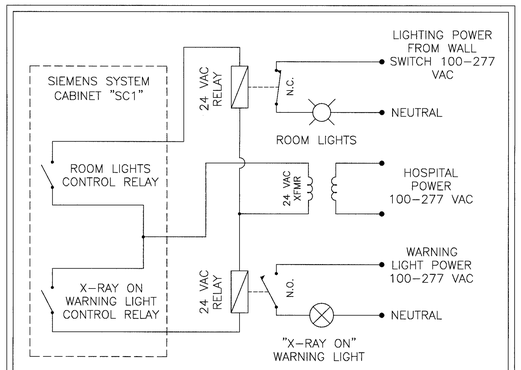

NOTES:

1. ALL ITEMS PROVIDED BY CUSTOMER ELECTRICAL CONTRACTOR EXCEPT CONTACTS INSIDE SIEMENS "SC1" CABINET (ITEMS INSIDE DOTTED LINES).
2. ALL WIRING THAT CONNECTS TO SIEMENS "SC1" CABINET MUST BE 14-18 AWG STRANDED WIRE.
3. ONLY 3 WIRES LABELED "24 VAC", "ROOM LIGHTS" AND "X-RAY ON" SHOULD BE SENT TO SIEMENS "SC1" CABINET.
4. 24 VAC RELAYS ARE TO BE SELECTED BY ELECTRICAL CONTRACTOR TO HANDLE THE VOLTAGE AND AMPERAGE OF LIGHTING CURCUIT.
5. IF NEEDED, A SWITCH TO BLOCK RADIATION CAN BE INSTALLED IN SERIES WITH THE DOOR CONTACT.
   * THE SWITCH (24 VDC / 20 MA) MUST BE PROVIDED ON SITE.
   * CONTROL USING +24 V FROM THE SYSTEM CONTROL CABINET
   * PLAN THE SWITCH SO THAT UNINTENTIONAL OPERATION IS NOT POSSIBLE.
   * THE SWITCH MUST BE PROVIDED WITH AN APPROPRIATE SYMBOL (OR DESIGNATION) FROM WHICH THE FUNCTION CAN BE RECOGNIZED.

D7 WARNING LIGHT / ROOM LIGHT SCHEMATIC (SIEMENS LAB #1)
NOT TO SCALE

FULLY SPRINKLERED
BID DOCUMENTS
FOR CONSTRUCTION

Revisions:	Date

CONSULTANTS:

ARCHITECT/ENGINEERS:
PARADIGM ENGINEERS AND CONSTRUCTORS
200 Envoy Circle #201, Louisville KY 40299 – PH: 502.339.8511 – www.paradigmusa.com

STATE OF KENTUCKY — BLAIRE CARROLL VAN GAMBERGE — 34,739 — LICENSED PROFESSIONAL ENGINEER — 9-11-2015

Drawing Title: ELECTRICAL LIGHTING DETAILS VENDOR EQUIPMENT	Project Title: REMODEL CARDIAC CATH LAB SUITE		Project Number: 635-CS1-102
Approved Project Director	Control Number: VA256-13-C-0277	Location: OKLAHOMA CITY VAMC, 921 NE 13TH STREET, OKLAHOMA CITY, OK 73104	Building Number: F
	PO Number: 635-C35336	Date: 05-21-2015 / Checked: WLM / Drawn: MMF	Drawing Number: EL502

Office of Construction and Facilities Management
Department of Veterans Affairs

VA FORM 08-6231

REFERENCE NOTES

REFER TO SHEER ED101 FOR DEMOLITION WORK ON FIRST FLOOR.

REFER TO SHEET EL101 FOR LIGHTING WORK ON FIRST FLOOR.

REFER TO SHEET EP103 FOR POWER WORK AT BASEMENT LEVEL.

REFER TO SHEET EM101 FOR MECHANICAL EQUIPMENT POWER WORK ON FIRST FLOOR.

REFER TO SHEET EM102 FOR MECHANICAL EQUIPMENT POWER WORK ON THIRD FLOOR.

REFER TO SHEETS ET101 AND ET102 FOR TELECOMMUNICATIONS WORK ON FIRST FLOOR.

REFER TO SHEET EY101 FOR SYSTEMS WORK ON FIRST FLOOR.

REFER TO SHEET FA101 FOR FIRE ALARM WORK ON FIRST FLOOR..

ELECTRICAL PANEL NOTES

CIRCUITS UTILIZED FOR NORMAL POWER SHALL ORIGINATE FROM EXISTING ELECTRICAL PANEL "L11C" LOCATED IN ROOM NO. 1F121.

CIRCUITS UTILIZED FOR LIFE SAFETY POWER SHALL ORIGINATE FROM NEW ELECTRICAL PANEL "L12LS" LOCATED IN ROOM NO. 1F121.

CIRCUITS UTILIZED FOR CRITICAL POWER SHALL ORIGINATE FROM EXISTING ELECTRICAL PANEL "L12CR" LOCATED IN ROOM NO. 1F185B.

EQUIPMENT SHOWN WITHIN LAB #2 (WEST) SHALL BE CONNECTED TO PHILIPS "MA" CONTROL PANEL. REFER TO SHEET E-601 FOR FURTHER INFORMATION.

EQUIPMENT SHOWN WITHIN LAB #1 (EAST) SHALL BE CONNECTED TO SIEMENS "SC1" CONTROL PANEL. REFER TO SHEET E-602 FOR FURTHER INFORMATION.

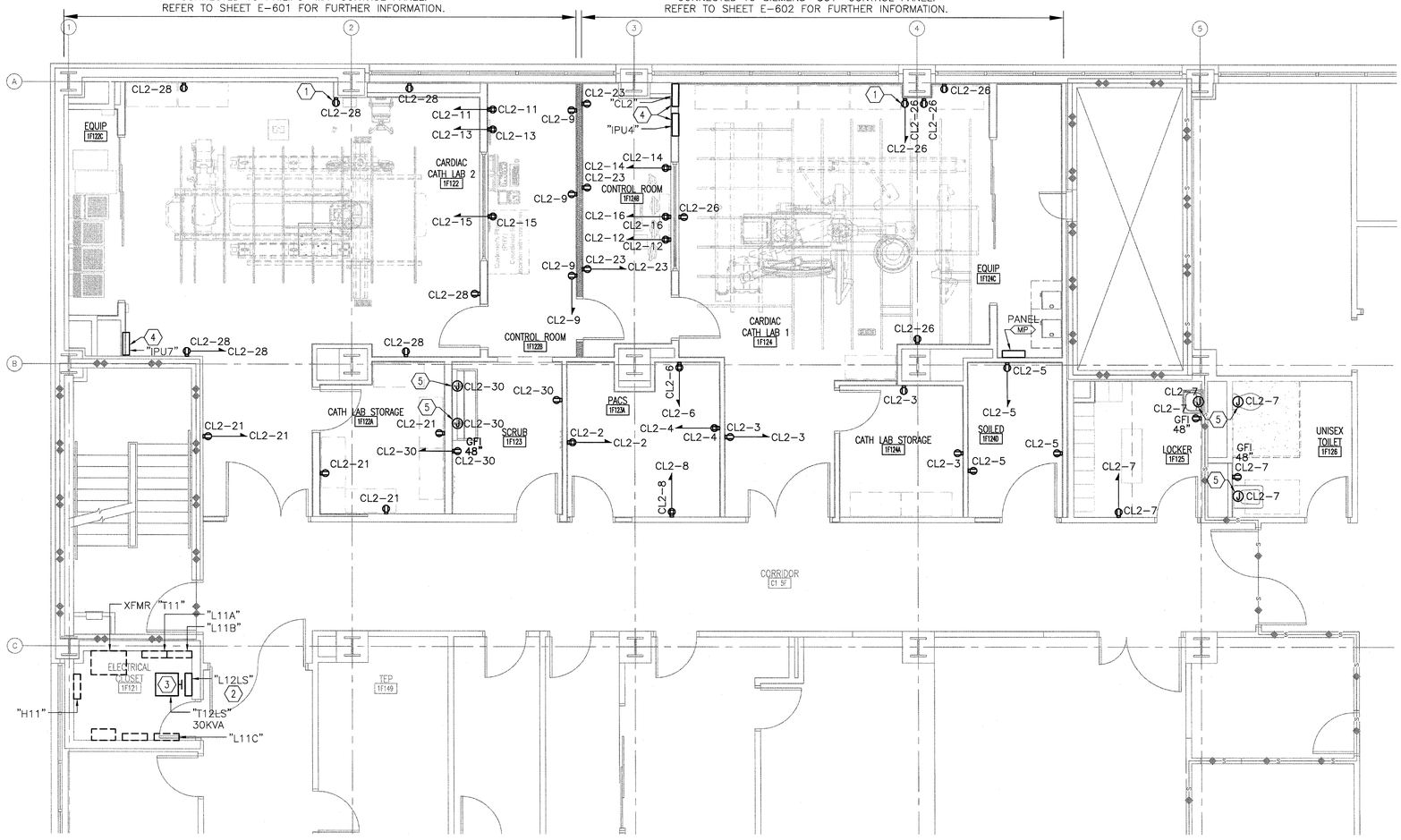

F1 PARTIAL FIRST FLOOR PLAN
SCALE 1/4" = 1'-0"

GENERAL ELECTRICAL PLAN NOTES

A. REFER TO E-001 FOR ELECTRICAL LEGEND, GENERAL NOTES, AND ABBREVIATIONS.

B. ALL RECEPTACLES SHALL BE INSTALLED AT 18" A.F.F. UNLESS OTHERWISE NOTED.

C. ALL CONDUITS TO BE CONCEALED WITHIN ALL WALLS UNLESS NOTED OTHERWISE.

D. ALL CONDUIT USED SHALL BE 3/4" MINIMUM.

E. SOME WORK UNDER THIS CONTRACT WILL REQUIRE WORK DUTIES TO BE PERFORMED AFTER NORMAL WORKING HOURS. DETERMINATION OF SPECIFIC WORK DUTIES TO BE PERFORMED AFTER HOURS SHALL BE MADE BY VA STAFF AT THEIR CONVENIENCE. POSSIBLE WORK REQUIRING AFTER HOURS APPROVAL INCLUDES, BUT IS NOT LIMITED TO: POWER OUTAGES, DISRUPTION OF SERVICES, EXTREME NOISE AND / OR VIBRATION, CUTTING AND PATCHING OF CONCRETE AND DELIVERIES OF EQUIPMENT.

F. SCOPE OF WORK SHALL BE LIMITED TO AREAS INDICATED ON FLOOR PLAN.

G. COORDINATE EXACT LOCATIONS OF MEDICAL EQUIPMENT WITH PHILIPS VENDOR DRAWINGS.

H. DEVICES AND EQUIPMENT SHOWN SHALL BE CONSIDERED NEW UNLESS NOTED OTHERWISE.

I. CIRCUIT NUMBERS SHOWN FOR REFERENCE ONLY, FIELD COORDINATE CIRCUIT NUMBERS AT SITE.

J. COORDINATE EXACT LOCATIONS OF VENDOR EQUIPMENT WITH VENDOR AT SITE PRIOR TO INSTALLATION.

K. REFER TO SHEETS E-601 AND E-602 FOR PHILIPS AND SIEMENS EQUIPMENT SCHEDULES.

L. BRANCH CIRCUIT WIRING SHALL BE COPPER AND STRANDED. SEE SPECIFICATION SECTION 260519 FOR FURTHER INFORMATION.

ELECTRICAL PLAN NOTES

1. PROVIDE RECEPTACLE FOR CLOCK TIMER AS INDICATED. VERIFY MOUNTING HEIGHT WITH VENDOR AND VA PRIOR TO INSTALLATION.
2. PROVIDE NEW ELECTRICAL PANEL AS INDICATED, REFER TO SHEET E-603 FOR FURTHER INFORMATION.
3. PROVIDE NEW TRANSFORMER: 30KVA, 480 – 120/208 VOLT. REFER TO SHEET EP501 FOR FURTHER INFORMATION.
4. EXISTING ELECTRICAL PANEL TO BE RELOCATED.
5. PROVIDE JUNCTION BOX WITH 120V POWER FROM INDICATED CIRCUIT FOR POWERED FLUSH AND SINK VALVES.

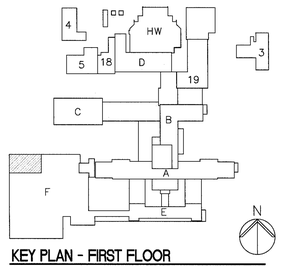

KEY PLAN - FIRST FLOOR
N.T.S.

FULLY SPRINKLERED
BID DOCUMENTS
FOR CONSTRUCTION

Revisions	Date

CONSULTANTS:

ARCHITECT/ENGINEERS:

PARADIGM ENGINEERS AND CONSTRUCTORS
200 Envoy Circle #201, Louisville KY 40299 – PH: 502.339.8511 – www.paradigmusa.com

STATE OF KENTUCKY — BLAINE CARROLL VAN GAMBEKE — 34,728 — LICENSED PROFESSIONAL ENGINEER

Drawing Title	ELECTRICAL POWER PLAN FIRST FLOOR
Approved Project Director	
Control Number	VA256-13-C-0277
PO Number	635-C35336
Project Title	REMODEL CARDIAC CATH LAB SUITE
Location	OKLAHOMA CITY VAMC, 921 N.E. 13TH STREET, OKLAHOMA CITY, OK 73104
Date	05-21-2015
Checked	WLM
Drawn	MMF
Project Number	635-CS1-102
Building Number	F
Drawing Number	EP101-A

Office of Construction and Facilities Management
Department of Veterans Affairs

VA FORM 08-6231

REFERENCE NOTES

REFER TO SHEER ED101 FOR DEMOLITION WORK ON FIRST FLOOR.

REFER TO SHEET EL101 FOR LIGHTING WORK ON FIRST FLOOR.

REFER TO SHEET EP103 FOR POWER WORK AT BASEMENT LEVEL.

REFER TO SHEET EM101 FOR MECHANICAL EQUIPMENT POWER WORK ON FIRST FLOOR.

REFER TO SHEET EM102 FOR MECHANICAL EQUIPMENT POWER WORK ON THIRD FLOOR.

REFER TO SHEETS ET101 AND ET102 FOR TELECOMMUNICATIONS WORK ON FIRST FLOOR.

REFER TO SHEET EY101 FOR SYSTEMS WORK ON FIRST FLOOR.

REFER TO SHEET FA101 FOR FIRE ALARM WORK ON FIRST FLOOR..

ELECTRICAL PANEL NOTES

CIRCUITS UTILIZED FOR NORMAL POWER SHALL ORIGINATE FROM EXISTING ELECTRICAL PANEL "L11C" LOCATED IN ROOM NO. 1F121.

CIRCUITS UTILIZED FOR LIFE SAFETY POWER SHALL ORIGINATE FROM NEW ELECTRICAL PANEL "L12LS" LOCATED IN ROOM NO. 1F121.

CIRCUITS UTILIZED FOR CRITICAL POWER SHALL ORIGINATE FROM EXISTING ELECTRICAL PANEL "L12CR" LOCATED IN ROOM NO. 1F185B.

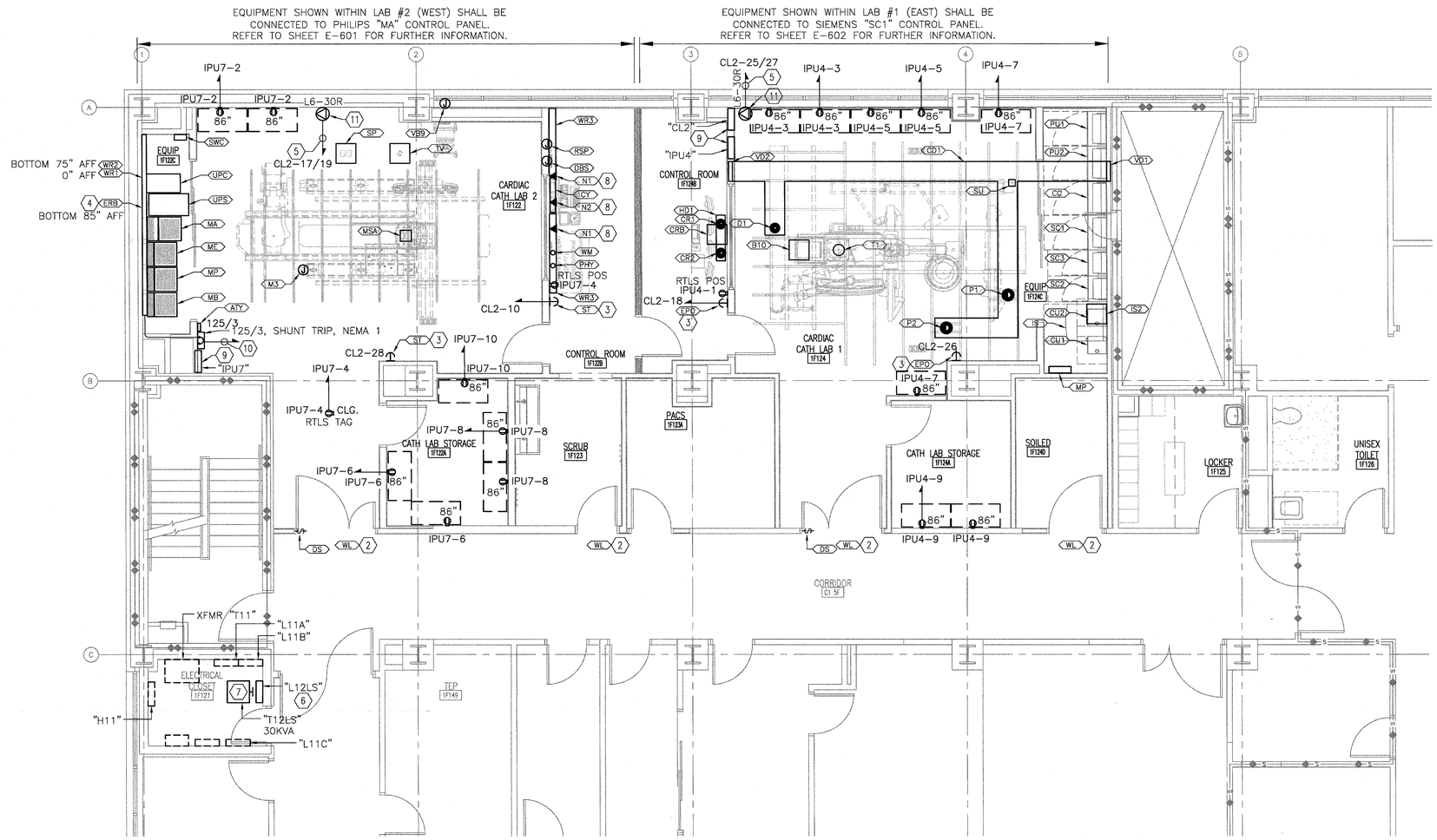

F1 PARTIAL FIRST FLOOR PLAN
SCALE 1/4" = 1'-0"

GENERAL ELECTRICAL PLAN NOTES

A. REFER TO E-001 FOR ELECTRICAL LEGEND, GENERAL NOTES, AND ABBREVIATIONS.

B. ALL RECEPTACLES SHALL BE INSTALLED AT 18" A.F.F. UNLESS OTHERWISE NOTED.

C. ALL CONDUITS TO BE CONCEALED WITHIN ALL WALLS UNLESS NOTED OTHERWISE.

D. ALL CONDUIT USED SHALL BE 3/4" MINIMUM.

E. SOME WORK UNDER THIS CONTRACT WILL REQUIRE WORK DUTIES TO BE PERFORMED AFTER NORMAL WORKING HOURS. DETERMINATION OF SPECIFIC WORK DUTIES TO BE PERFORMED AFTER HOURS SHALL BE MADE BY VA STAFF AT THEIR CONVENIENCE. POSSIBLE WORK REQUIRING AFTER HOURS APPROVAL INCLUDES, BUT IS NOT LIMITED TO: POWER OUTAGES, DISRUPTION OF SERVICES, EXTREME NOISE AND / OR VIBRATION, CUTTING AND PATCHING OF CONCRETE AND DELIVERIES OF EQUIPMENT.

F. SCOPE OF WORK SHALL BE LIMITED TO AREAS INDICATED ON FLOOR PLAN.

G. COORDINATE EXACT LOCATIONS OF MEDICAL EQUIPMENT WITH PHILIPS VENDOR DRAWINGS.

H. DEVICES AND EQUIPMENT SHOWN SHALL BE CONSIDERED NEW UNLESS NOTED OTHERWISE.

I. CIRCUIT NUMBERS SHOWN FOR REFERENCE ONLY, FIELD COORDINATE CIRCUIT NUMBERS AT SITE.

J. COORDINATE EXACT LOCATIONS OF VENDOR EQUIPMENT WITH VENDOR AT SITE PRIOR TO INSTALLATION.

K. REFER TO SHEETS E-601 AND E-602 FOR PHILIPS AND SIEMENS EQUIPMENT SCHEDULES.

L. BRANCH CIRCUIT WIRING SHALL BE COPPER AND STRANDED. SEE SPECIFICATION SECTION 260519 FOR FURTHER INFORMATION.

ELECTRICAL PLAN NOTES

1. NOT USED
2. "X-RAY IN USE" LIGHT FIXTURE, REFER TO SHEET EL101 AND EL502 FOR FURTHER INFORMATION.
3. THE ELECTRICAL CONTRACTOR SHALL PROVIDE MUSHROOM HEAD PUSH BUTTON TO ACTIVATE SHUNT TRIP IN MAIN CIRCUIT BREAKER. REFER TO DETAIL B6/E-501 AND SHEET E-502.
4. GROUND BUSS BAR FURNISHED BY VENDOR, INSTALLED AND WIRED BY ELECTRICAL CONTRACTOR, REFER TO SHEETS E-501 AND E-502 FOR FURTHER INFORMATION.
5. ROUTE 3/4" CONDUIT WITH (4) #10 AND (1) #10 GND. TO PANEL "CL2". ROUTE CONDUIT OVERHEAD IN ACCESSIBLE CEILING SPACE. PROVIDE NEW 30 AMP 2-POLE MOLDED CASE BREAKER WITHIN PANEL "CL2". SEE PANEL SCHEDULE ON SHEET EP601 FOR FURTHER INFORMATION.
6. PROVIDE NEW ELECTRICAL PANEL AS INDICATED, REFER TO SHEET E-603 FOR FURTHER INFORMATION.
7. PROVIDE NEW TRANSFORMER: 30KVA, 480 – 120/208 VOLT. REFER TO SHEET EP501 FOR FURTHER INFORMATION.
8. REFER TO SHEET ET101 AND PHILIPS VENDOR DRAWINGS FOR ADDITIONAL INFORMATION REGARDING "N1" AND "N2" DATA OUTLETS.
9. EXISTING ELECTRICAL PANEL TO BE RELOCATED.
10. REPLACE EXISTING 150/3 CIRCUIT BREAKER WITHIN PANEL "H2X" WITH A NEW 125/3 CIRCUIT BREAKER IN SAME LOCATION. RE-USE EXISTING CONDUIT AND FEEDER CONDUCTORS. SEE RISER DIAGRAM F1/EP502 FOR FURTHER INFORMATION.
11. PROVIDE NEMA L6-30R TWIST-LOCK RECEPTACLE FOR LASER SYSTEM. COORDINATE EXACT LOCATION WITH VA PRIOR TO INSTALLATION.

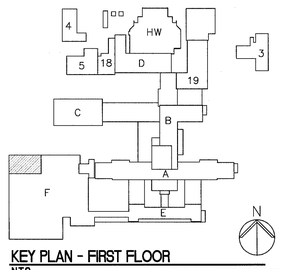

KEY PLAN - FIRST FLOOR
N.T.S.

FULLY SPRINKLERED
BID DOCUMENTS
FOR CONSTRUCTION

Revisions	Date

CONSULTANTS:

ARCHITECT/ENGINEERS:

PARADIGM ENGINEERS AND CONSTRUCTORS
200 Envoy Circle #201, Louisville KY 40299 – PH: 502.339.8511 – www.paradigmusa.com

STATE OF KENTUCKY 2015 BLAISE CARRIE VAN GAMBEKE 34,789 LICENSED PROFESSIONAL ENGINEER

Drawing Title	ELECTRICAL POWER PLAN RADIOLOGY EQUIPMENT FIRST FLOOR
Project Title	REMODEL CARDIAC CATH LAB SUITE
Project Number	635-CSI-102
Building Number	F
Approved Project Director	
Control Number	VA256-13-C-0277
PO Number	635-C35336
Location	OKLAHOMA CITY VAMC, 921 N.E. 13TH STREET, OKLAHOMA CITY, OK 73104
Date	05-21-2015
Checked	WLM
Drawn	MMF
Drawing Number	EP101-B

Office of Construction and Facilities Management
Department of Veterans Affairs

VA FORM 08-6231

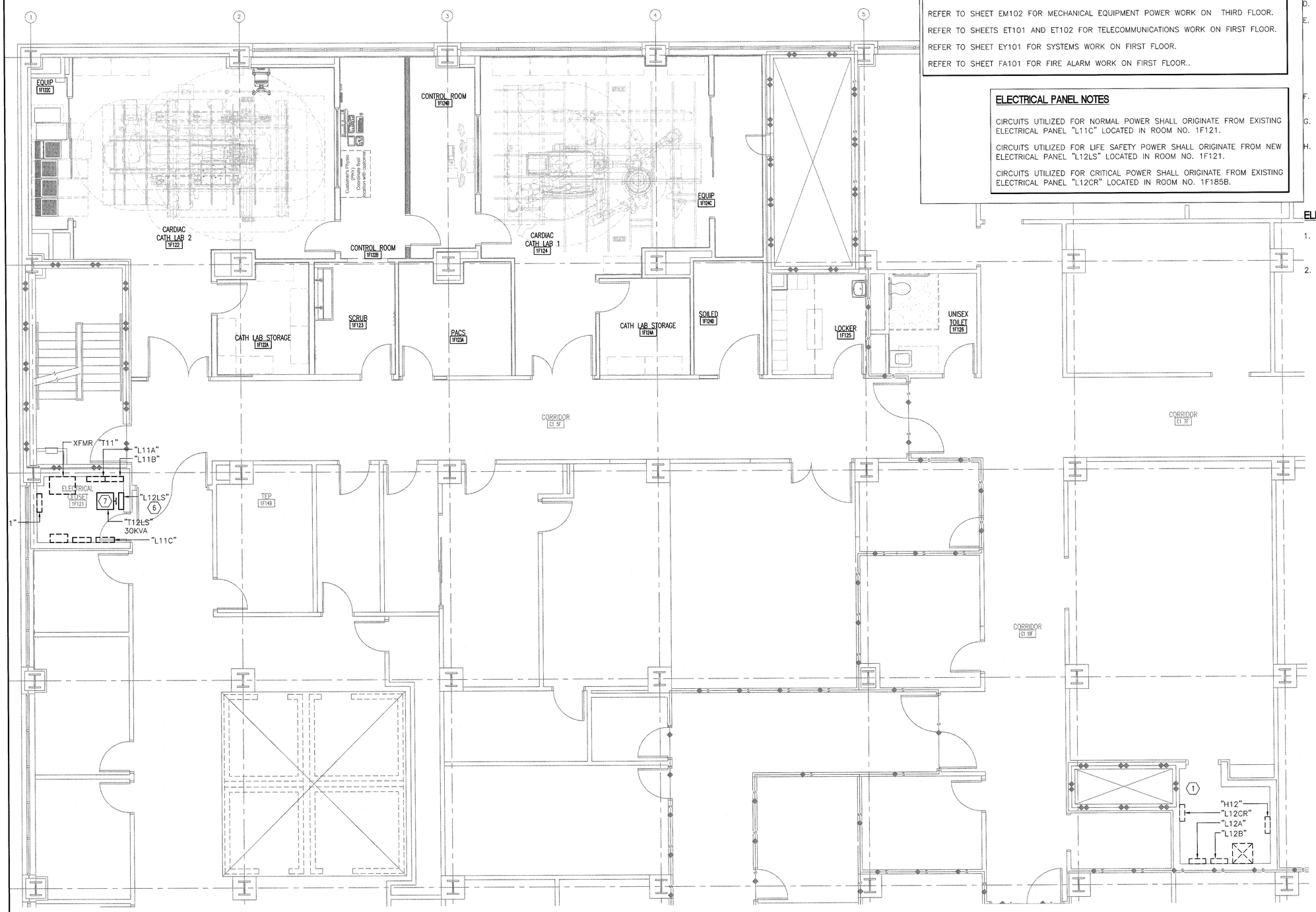

F1 PARTIAL FIRST FLOOR PLAN
SCALE 1/4" = 1'-0"

REFERENCE NOTES

REFER TO SHEER ED101 FOR DEMOLITION WORK ON FIRST FLOOR.

REFER TO SHEET EL101 FOR LIGHTING WORK ON FIRST FLOOR.

REFER TO SHEET EP103 FOR POWER WORK AT BASEMENT LEVEL.

REFER TO SHEET EM101 FOR MECHANICAL EQUIPMENT POWER WORK ON FIRST FLOOR.

REFER TO SHEET EM102 FOR MECHANICAL EQUIPMENT POWER WORK ON THIRD FLOOR.

REFER TO SHEETS ET101 AND ET102 FOR TELECOMMUNICATIONS WORK ON FIRST FLOOR.

REFER TO SHEET EY101 FOR SYSTEMS WORK ON FIRST FLOOR.

REFER TO SHEET FA101 FOR FIRE ALARM WORK ON FIRST FLOOR..

ELECTRICAL PANEL NOTES

CIRCUITS UTILIZED FOR NORMAL POWER SHALL ORIGINATE FROM EXISTING ELECTRICAL PANEL "L11C" LOCATED IN ROOM NO. 1F121.

CIRCUITS UTILIZED FOR LIFE SAFETY POWER SHALL ORIGINATE FROM NEW ELECTRICAL PANEL "L12LS" LOCATED IN ROOM NO. 1F121.

CIRCUITS UTILIZED FOR CRITICAL POWER SHALL ORIGINATE FROM EXISTING ELECTRICAL PANEL "L12CR" LOCATED IN ROOM NO. 1F185B.

GENERAL ELECTRICAL PLAN NOTES

A. REFER TO E-001 FOR ELECTRICAL LEGEND, GENERAL NOTES, AND ABBREVIATIONS.

B. ALL RECEPTACLES SHALL BE INSTALLED AT 18" A.F.F. UNLESS OTHERWISE NOTED.

C. ALL CONDUITS TO BE CONCEALED WITHIN ALL WALLS UNLESS NOTED OTHERWISE.

D. ALL CONDUIT USED SHALL BE 3/4" MINIMUM.

E. SOME WORK UNDER THIS CONTRACT WILL REQUIRE WORK DUTIES TO BE PERFORMED AFTER NORMAL WORKING HOURS. DETERMINATION OF SPECIFIC WORK DUTIES TO BE PERFORMED AFTER HOURS SHALL BE MADE BY VA STAFF AT THEIR CONVENIENCE. POSSIBLE WORK REQUIRING AFTER HOURS APPROVAL INCLUDES, BUT IS NOT LIMITED TO: POWER OUTAGES, DISRUPTION OF SERVICES, EXTREME NOISE AND / OR VIBRATION, CUTTING AND PATCHING OF CONCRETE AND DELIVERIES OF EQUIPMENT.

F. SCOPE OF WORK SHALL BE LIMITED TO AREAS INDICATED ON FLOOR PLAN.

G. COORDINATE EXACT LOCATIONS OF MEDICAL EQUIPMENT WITH PHILIPS VENDOR DRAWINGS.

H. DEVICES AND EQUIPMENT SHOWN SHALL BE CONSIDERED EXISTING TO REMAIN UNLESS NOTED OTHERWISE.

ELECTRICAL PLAN NOTES

1. ELECTRICAL PANELS IN THIS ROOM ARE EXISTING TO REMAIN, SHOWN FOR REFERENCE ONLY. REFER TO SHEET EP502 FOR FURTHER INFORMATION.
2. PROVIDE NEW TRANSFORMER AND PANEL AS INDICATED, REFER TO SHEET EP501 FOR FURTHER INFORMATION.

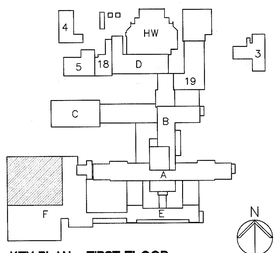

KEY PLAN - FIRST FLOOR
N.T.S.

FULLY SPRINKLERED
BID DOCUMENTS
FOR CONSTRUCTION

Revisions:	Date

CONSULTANTS:

ARCHITECT/ENGINEERS:

PARADIGM
ENGINEERS AND CONSTRUCTORS
200 Envoy Circle #201, Louisville KY 40299 – PH: 502.339.8511 – www.paradigmusa.com

STATE OF KENTUCKY — BLAINE CARROL VAN GARRENEKE 24,738 LICENSED PROFESSIONAL ENGINEER

Drawing Title: ELECTRICAL POWER PLAN FIRST FLOOR CRITICAL POWER ROUTING	Project Title: REMODEL CARDIAC CATH LAB SUITE	Project Number: 635-CS1-102	Office of Construction and Facilities Management
		Building Number: F	
Approved Project Director	Control Number: VA256-13-C-0277	Location: OKLAHOMA CITY VAMC, 921 NE 13TH STREET, OKLAHOMA CITY, OK 73104	Drawing Number: EP102
	PO Number: 635-C35336	Date: 05-21-2015 / Checked: WLM / Drawn: MMF	Department of Veterans Affairs

VA FORM 08-6231

REFERENCE NOTES

REFER TO SHEER ED101 FOR DEMOLITION WORK ON FIRST FLOOR.

REFER TO SHEET EL101 FOR LIGHTING WORK ON FIRST FLOOR.

REFER TO SHEETS EP101-A, EP101-B, AND EP102 FOR POWER WORK ON FIRST FLOOR.

REFER TO SHEET EM101 FOR MECHANICAL EQUIPMENT POWER WORK ON FIRST FLOOR.

REFER TO SHEET EM102 FOR MECHANICAL EQUIPMENT POWER WORK ON THIRD FLOOR.

REFER TO SHEETS ET101 AND ET102 FOR TELECOMMUNICATIONS WORK ON FIRST FLOOR.

REFER TO SHEET EY101 FOR SYSTEMS WORK ON FIRST FLOOR.

REFER TO SHEET FA101 FOR FIRE ALARM WORK ON FIRST FLOOR..

GENERAL ELECTRICAL PLAN NOTES

A. REFER TO E-001 FOR ELECTRICAL LEGEND, GENERAL NOTES, AND ABBREVIATIONS.

B. ALL CONDUITS TO BE CONCEALED WITHIN ALL WALLS UNLESS NOTED OTHERWISE.

C. SOME WORK UNDER THIS CONTRACT WILL REQUIRE WORK DUTIES TO BE PERFORMED AFTER NORMAL WORKING HOURS. DETERMINATION OF SPECIFIC WORK DUTIES TO BE PERFORMED AFTER HOURS SHALL BE MADE BY VA STAFF AT THEIR CONVENIENCE. POSSIBLE WORK REQUIRING AFTER HOURS APPROVAL INCLUDES, BUT IS NOT LIMITED TO: POWER OUTAGES, DISRUPTION OF SERVICES, EXTREME NOISE AND / OR VIBRATION, CUTTING AND PATCHING OF CONCRETE AND DELIVERIES OF EQUIPMENT.

D. SCOPE OF WORK SHALL BE LIMITED TO AREAS INDICATED ON FLOOR PLAN.

E. DEVICES AND EQUIPMENT SHOWN SHALL BE CONSIDERED EXISTING TO REMAIN UNLESS NOTED OTHERWISE.

F. PROVIDE FIRE STOPPING AT EACH FLOOR PENETRATION.

ELECTRICAL PLAN NOTES

1. EXISTING ELECTRICAL EQUIPMENT. NO WORK REQUIRED. SHOWN FOR REFERENCE ONLY. TYPICAL UNLESS NOTED OTHERWISE.
2. ROUTE NEW FEEDER CONDUCTORS AND CONDUIT FROM PANEL "DPCR" TO PHILIPS AND SIEMENS CONTROL PANELS. REFER TO SHEET EP501 FOR CONDUIT AND FEEDER SIZES
3. ROUTE NEW CONDUIT AND FEEDER CONDUCTOR FROM EXISTING PANEL "DPLS" TO NEW TRANSFORMER "T-L12LS" ON FIRST FLOOR. REFER TO SHEET EP501 FOR FURTHER INFORMATION. ROUTE CONDUIT AND FEEDER CONDUCTORS ALONG CEILING DECK.
4. ROUTE CONDUIT AND FEEDER CONDUCTORS UP TO FIRST FLOOR, PROVIDE FIRE STOPPING AT EACH FLOOR PENETRATION. REFER TO DETAIL E1/EP501 FOR FURTHER INFORMATION.

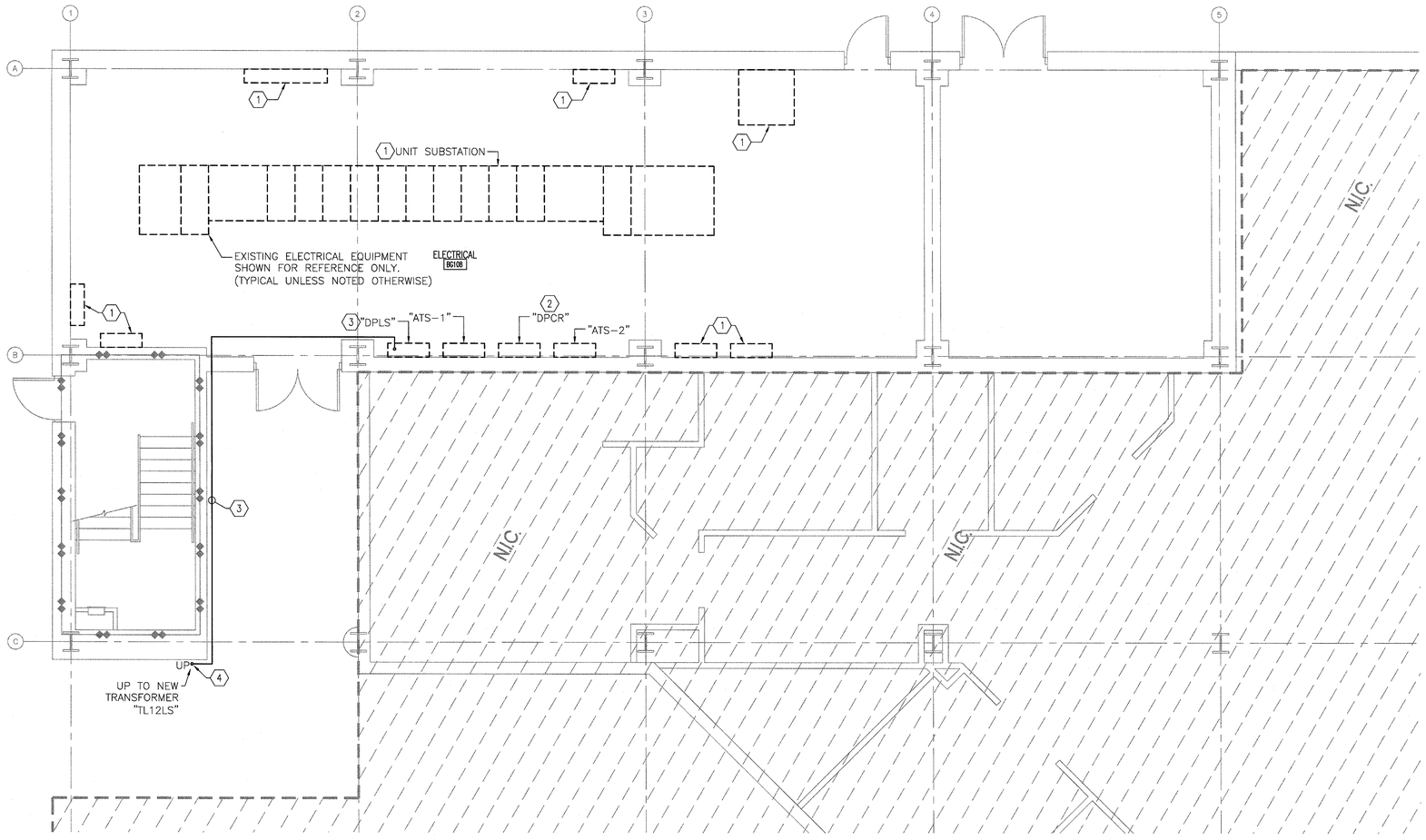

F1 PARTIAL BASEMENT FLOOR PLAN
SCALE 1/4" = 1'-0"

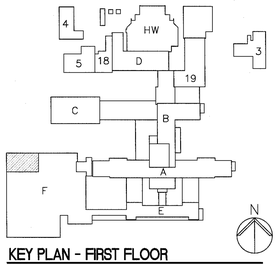

KEY PLAN - FIRST FLOOR
N.T.S.

FULLY SPRINKLERED
BID DOCUMENTS
FOR CONSTRUCTION

Revisions:	Date

CONSULTANTS:

ARCHITECT/ENGINEERS:

PARADIGM
ENGINEERS AND CONSTRUCTORS
200 Envoy Circle #201, Louisville KY 40299 – PH: 502.339.8511 – www.paradigmusa.com

STATE OF KENTUCKY
BLAINE CASSEL VAN GANSBEKE
24,708
LICENSED
PROFESSIONAL ENGINEER

Drawing Title: ELECTRICAL POWER PLAN BASEMENT	Project Title: REMODEL CARDIAC CATH LAB SUITE	Project Number: 635-CS1-102	Office of Construction and Facilities Management
Approved Project Director	Control Number: VA256-13-C-0277	Building Number: F	
	PO Number: 635-C35336	Location: OKLAHOMA CITY VAMC, 921 N.E. 13TH STREET, OKLAHOMA CITY, OK 73104	Drawing Number: EP103
		Date: 05-21-2015 / Checked: WLM / Drawn: MMF	Department of Veterans Affairs

VA FORM 08-6231

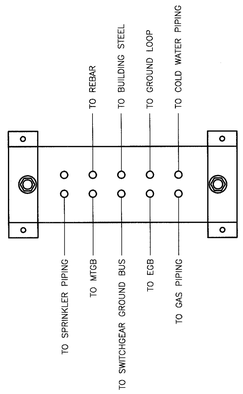

NOTES

A. ALL GROUNDING CONNECTIONS SHALL BE IN CONFORMANCE WITH NEC 250

B. PROVIDE QUANTITY OF PREDRILLED STANDARD NEMA BOLT HOLES SIZED AND SPACED AS REQUIRED FOR ALL REQUIRED CONNECTIONS

C. FOR ALL ADDITIONAL CONNECTION REQUIREMENTS REFER TO SPEC SECTION 260526

C1 MAIN ELECTRICAL GROUND BUS CONNECTIONS
NTS

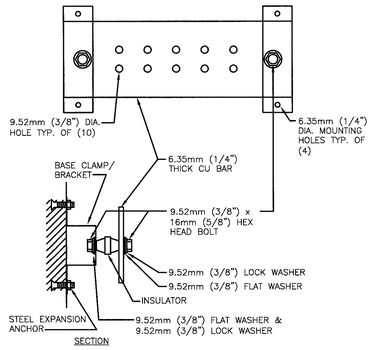

GENERAL NOTES:

1. ALL HARDWARE SHALL BE STAINLESS STEEL.
2. PROVIDE 1 MOUNTING POINT PER 305mm (12") OF BAR LENGTH.
3. HOLES MAY BE ADDED IF REQUIRED.

C3 GROUNDING BAR DETAIL
NTS

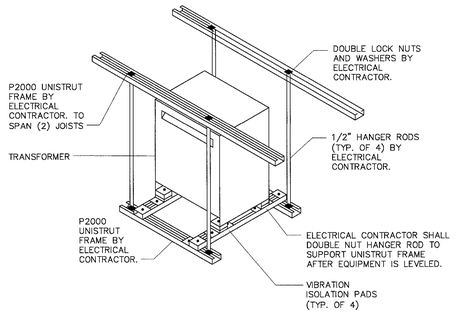

C5 TRAPEZE TRANSFORMER MOUNTING DETAIL
NTS

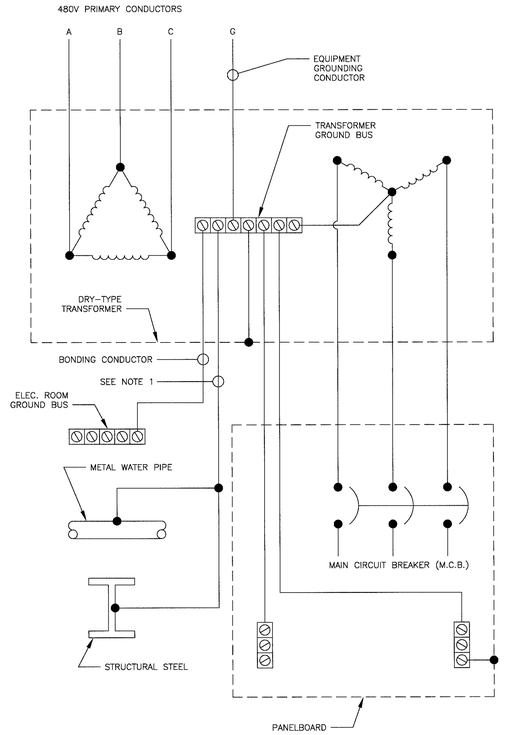

NOTES

1. SEPARATELY DERIVED AC SYSTEM GROUNDING ELECTRODE CONDUCTOR IN CONDUIT, SIZED IN ACCORDANCE WITH N.E.C. ARTICLE 250. BOND TO ALL GROUNDING ELECTRODES (ELECTRICAL GROUND BUS, METAL WATER PIPE, STRUCTURAL STEEL, ETC.) IN AREA.
2. ALL GROUNDED CONDUCTORS SHALL BE SIZED IN ACCORDANCE WITH FEEDER SCHEDULE FOR THE DERIVED PHASE CONDUCTORS

D8 TYPICAL 480V-208Y/120 DRY TYPE DRANSFORMER GROUNDING DETAIL
NTS

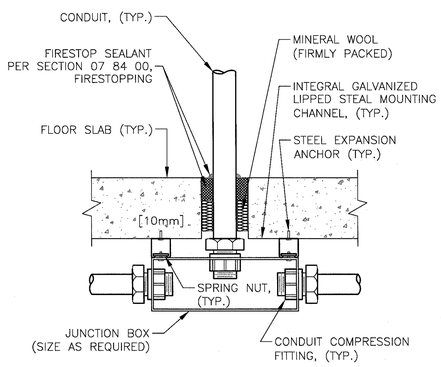

E1 FLOOR SLAB PENETRATION DETAIL
NOT TO SCALE

FULLY SPRINKLERED
BID DOCUMENTS
FOR CONSTRUCTION

Revisions	Date

CONSULTANTS:

ARCHITECT/ENGINEERS:

PARADIGM
ENGINEERS AND CONSTRUCTORS
200 Envoy Circle #201, Louisville KY 40299 – PH: 502.339.8511 – www.paradigmuso.com

STATE OF KENTUCKY — BLAISE CARRIE VAN GANSBEKE 34,759 — LICENSED PROFESSIONAL ENGINEER

Drawing Title: ELECTRICAL POWER DETAILS	Project Title: REMODEL CARDIAC CATH LAB SUITE		Project Number: 635-CS1-102
			Building Number: F
Approved Project Director	Control Number: VA256-13-C-0277	Location: OKLAHOMA CITY VAMC, 921 N.E. 13TH STREET, OKLAHOMA CITY, OK 73104	Drawing Number: EP501
	PO Number: 635-C35336	Date: 05-21-2015 / Checked: WLM / Drawn: MMF	

Office of Construction and Facilities Management
Department of Veterans Affairs

VA FORM 08-6231

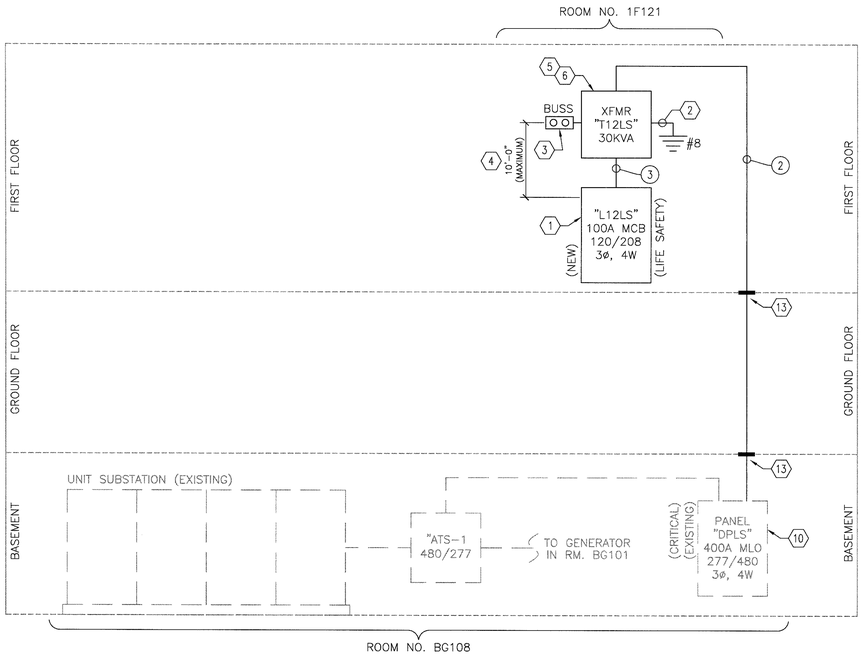

C1 PARTIAL RISER DIAGRAM - 'LIFE SAFETY' BRANCH
NO SCALE

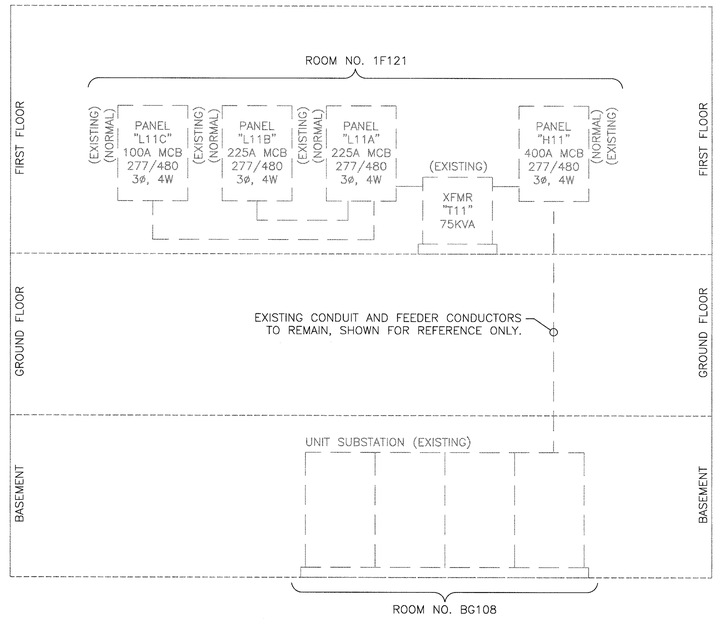

C5 PARTIAL RISER DIAGRAM - 'NORMAL' BRANCH
NO SCALE

ITEM	VOLTAGE	AMPS	SETS	CONDUIT SIZE	FEEDER SIZE	GROUND SIZE
1	120/208	30	1	3/4"	(4) #10	(1) #10
2	480/277	50	1	3/4"	(3) #8	(1) #10
3	120/208	100	1	1-1/4"	(4) #3	(1) #8
4	480/277	100	1	1-1/4"	(3) #3	(1) #8
5	480/277	150	1	2"	(4) #1/0	(1) #6
6	480/277	225	1	2"	(4) # 4/0	(1) #4
7	480/277	50	1	1	(4) #8	(1) #10

A7 FEEDER SCHEDULE
NO SCALE

ITEM	KVA	TYPE	MOUNTING	PRIMARY	SECONDARY	GROUND
T12LS	30	DRY	TRAPEZE	480	120-208	1#8

B8 TRANSFORMER SCHEDULE
NO SCALE

ELECTRICAL RISER DIAGRAM NOTES

1. PROVIDE NEW ELECTRICAL PANEL AS INDICATED, REFER TO PANEL BOARD SCHEDULE FOR FURTHER INFORMATION.
2. PROVIDE GROUNDING ELECTRODE AS INDICATED. INSTALL PER ARTICLE 250.66 OF THE NEC. REFER TO GROUNDING DETAIL D8/EP501 FOR FURTHER INFORMATION.
3. PROVIDE GROUND AND BUSS BAR AS INDICATED. REFER TO GROUNDING DETAILS C1/EP501 AND C3/EP501 FOR FURTHER INFORMATION.
4. FEEDER CONDUCTOR LENGTH SHALL NOT EXCEED 10'-0" FROM TERMINATION POINT WITHIN TRANSFORMER "T-EP4C" TO TERMINATION POINT WITHIN PANEL "EP4C". INSTALLATION SHALL COMPLY WITH NEC ARTICLE 450.3.(B).
5. PROVIDE TRAPEZE MOUNTING BRACKET FOR TRANSFORMER "T12LS". REFER TO DETAIL C5/EP501
6. PROVIDE DRY-TYPE TRANSFORMER. REFER TO TRANSFORMER SCHEDULE ON THIS SHEET FOR FURTHER INFORMATION.
7. PROVIDE NEW 125A 3-POLE SHUNT TRIP MOLDED CASE CIRCUIT BREAKER IN NEMA 1 ENCLOSURE.
8. REPLACE EXISTING 150A 3-POLE CIRCUIT BREAKER FEEDING EXISTING CATH LAB WEST PHILIPS EQUIPMENT WITH A 125A 3-POLE CIRCUIT BREAKER FOR NEW CATH LAB WEST PHILIPS EQUIPMENT. REPLACE EXISTING CIRCUIT BREAKER FEEDING EXISTING CATH LAB EAST PHILIPS EQUIPMENT WITH NEW 300A 3-POLE CIRCUIT BREAKER FOR NEW PANEL "MP"
9. ELECTRICAL CONTRACTOR SHALL INTERCEPT EXISTING CONDUIT AND FEEDER CONDUCTORS, AND PROVIDE MOLDED CASE CIRCUIT BREAKER AS INDICATED.
10. PROVIDE NEW 50/3 CIRCUIT BREAKER WITHIN EXISTING PANEL, NEW CIRCUIT BREAKER TYPE SHALL MATCH EXISTING.
11. PANEL FURNISHED BY ELECTRICAL CONTRACTOR.
12. FURNISHED BY PHILIPS VENDOR.
13. PROVIDE FIRE STOPPING AT EACH FLOOR PENETRATION. REFER TO DETAIL E1/EP501 FOR FURTHER INFORMATION.

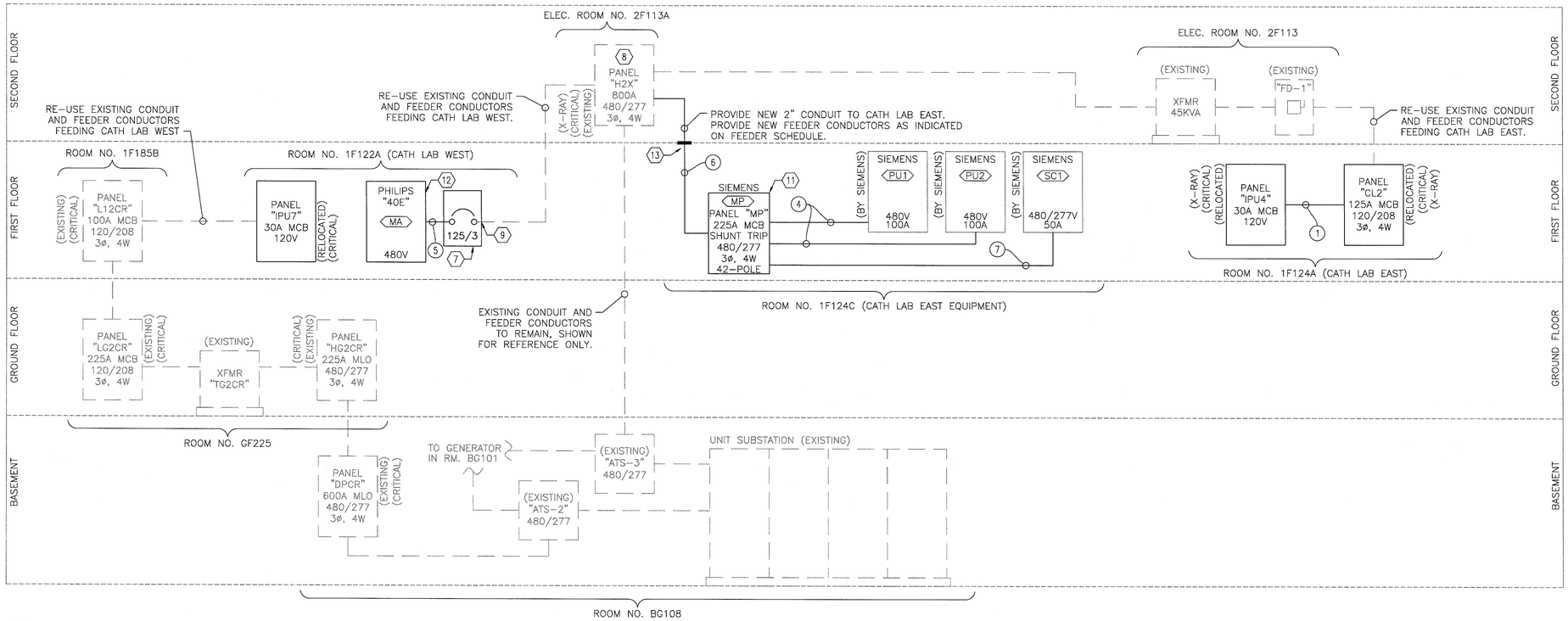

F1 PARTIAL RISER DIAGRAM - 'CRITICAL' AND 'X-RAY CRITICAL' BRANCHES
NO SCALE

FULLY SPRINKLERED
BID DOCUMENTS
FOR CONSTRUCTION

Revisions	Date

CONSULTANTS:

ARCHITECT/ENGINEERS:

PARADIGM
ENGINEERS AND CONSTRUCTORS
200 Envoy Circle #201, Louisville KY 40299 – PH: 502.339.8511 – www.paradigmusa.com

STATE OF KENTUCKY — BLAKE CARRIE VAN GAMBERKE — 34,788 — LICENSED PROFESSIONAL ENGINEER — 10-21-2015

Drawing Title	ELECTRICAL RISER DIAGRAMS
Project Title	REMODEL CARDIAC CATH LAB SUITE
Project Number	635-CS1-102
Building Number	F
Approved Project Director	
Control Number	VA256-13-C-0277
PO Number	635-C35336
Location	OKLAHOMA CITY VAMC, 921 NE. 13TH STREET, OKLAHOMA CITY, OK 73104
Date	05-21-2015
Checked	WLM
Drawn	MMF
Drawing Number	EP502

Office of Construction and Facilities Management
Department of Veterans Affairs

VA FORM 08-6231

PANEL "H2X"

CRITICAL X-RAY POWER

EXISTING PANEL

PANEL INFORMATION

MAIN TYPE	800A MLO		
VOLTAGE	277/ 480	VOLTS	3PH-4W
MOUNTING			
AIC RATING			
ENCLOSURE TYPE			

PANEL RATING & FEEDER

PANEL AMPACITY:		800 AMPS
PHASE CONDUTORS:	(3)	[EXISTING] THWN
NEUTRAL	(1)	[EXISTING] THWN
# OF SETS		[EXISTING]
SOURCE	SEE RISER	

CKT	DESCRIPTION	CB AMPS	WIRE SIZE	LOAD IN VOLT AMPS (VA) LTG (125%)	RECEPT.	KITCHEN	HVAC	MISC	PHASE	LOAD IN VOLT AMPS (VA) MISC	HVAC	KITCHEN	RECEPT.	LTG (125%)	WIRE SIZE	CB AMPS	DESCRIPTON	CKT
1								33240	A	44320					#4/0	400	[EXISTING LOAD]	2
3	[EXISTING LOAD]	300	#4/0					33240	B	44320								4
5								33240	C	44320								6
7								11000	A	16620					#1	125	RE-USE BREAKER FOR NEW PHILIPS EQUIP. (WEST CATH LAB) **	8
9	[EXISTING LOAD]	100	#3					11000	B	16620								10
11								11000	C	16620								12
13								8864	A	22160					#3/0	200	[EXISTING LOAD]	14
15	[EXISTING LOAD]	80	#4					8864	B	22160								16
17								8864	C	22160								18
19								16620	A	22160					#3/0	200	[EXISTING LOAD]	20
21	[EXISTING LOAD]	150	#1/0					16620	B	22160								22
23								16620	C	22160								24
25								13850	A	6648					#6	60	[EXISTING LOAD]	26
27	[EXISTING LOAD]	125	#1					13850	B	6648								28
29								13850	C	6648								30
31									A						–	–	SPACE	32
33	SPARE	350	#4/0						B									34
35									C									36
37									A	6533					#4/0	300	PANEL "MP" SIEMENS EQUIP. (EAST CATH LAB)	38
39	SPACE	–	–						B	6533								40
41									C	6533								42
TOTAL LOADS				0	0	0	0	250722		355323	0	0	0	0			TOTAL LOADS	

PANEL NOTES

** EXISTING PHILIPS EQUIPMENT FOR CATH LAB WEST IS NOT INDICATED ON EXISTING PANEL SCHEDULE. ELECTRICAL CONTRACTOR SHALL VERIFY ON SITE WHICH BREAKER FEEDS EXISTING PHILIPS EQUIPMENT IN CATH LAB WEST AND SHALL RE-USE THE EXISTING BREAKER AS INDICATED ON THIS SCHEDULE AND ON SHEETS EP101 AND EP502.

NEW CIRCUIT BREAKER TYPE SHALL MATCH EXISTING.

LOAD CALCULATION (NEC 2008 – ARTICLE 220)

LOAD TYPE	LOAD (kVA)	DEMAND %	DEMAND LOAD	kW
LIGHTING	0.00	1.25	0.0	kW
RECEPTALCES	0.00	1.00	0.0	kW
RECEPTACLES > 10000	0.00	0.50		
KITCHEN EQUIPMENT	0.00	0.65	0.0	kW
MISC.	606.05	1.00	606.0	kW
HVAC	0.00	1.00	0.0	kW
TOTAL kW DEMAND			606.0	kW
TOTAL DEMAND AMPS	@ 100%		728.96	AMPS

PANEL "MP"

CRITICAL X-RAY POWER

NEW PANEL

PANEL INFORMATION

MAIN TYPE	225A MCB	(SHUNT TRIP)	
VOLTAGE	277/ 480	VOLTS	3PH-4W
MOUNTING	SURFACE	MOUNT	
AIC RATING	14000 AIC		
ENCLOSURE TYPE	NEMA-1		

PANEL RATING & FEEDER

PANEL AMPACITY:		225 AMPS
PHASE CONDUTORS:	(3)	300MCM THWN
NEUTRAL	(1)	#4 THWN
# OF SETS		1
SOURCE	SEE RISER	

CKT	DESCRIPTION	CB AMPS	WIRE SIZE	LOAD IN VOLT AMPS (VA) LTG (125%)	RECEPT.	KITCHEN	HVAC	MISC	PHASE	LOAD IN VOLT AMPS (VA) MISC	HVAC	KITCHEN	RECEPT.	LTG (125%)	WIRE SIZE	CB AMPS	DESCRIPTON	CKT
1								2667	A	2667					#3	100	"PU2" SIEMENS POLY A100 CABINET	2
3	"PU1" SIEMENS POLY A100 CABINET	100	#3					2667	B	2667								4
5								2667	C	2667								6
7								1200	A						–	–	SPACE	8
9	"SC1" SIEMENS SYSTEM CABINET	50	#8					1200	B						–	–	SPACE	10
11								1200	C						–	–	SPACE	12
13	SPACE	–	–						A						–	–	SPACE	14
15	SPACE	–	–						B						–	–	SPACE	16
17	SPACE	–	–						C						–	–	SPACE	18
19	SPACE	–	–						A						–	–	SPACE	20
21	SPACE	–	–						B						–	–	SPACE	22
23	SPACE	–	–						C						–	–	SPACE	24
25	SPACE	–	–						A						–	–	SPACE	26
27	SPACE	–	–						B						–	–	SPACE	28
29	SPACE	–	–						C						–	–	SPACE	30
31	SPACE	–	–						A						–	–	SPACE	32
33	SPACE	–	–						B						–	–	SPACE	34
35	SPACE	–	–						C						–	–	SPACE	36
37	SPACE	–	–						A						–	–	SPACE	38
39	SPACE	–	–						B						–	–	SPACE	40
41	SPACE	–	–						C						–	–	SPACE	42
TOTAL LOADS				0	0	0	0	11601		8001	0	0	0	0			TOTAL LOADS	

PANEL NOTES

MAIN CIRCUIT BREAKER SHALL BE SHUNT TRIP.

LOAD CALCULATION (NEC 2008 – ARTICLE 220)

LOAD TYPE	LOAD (kVA)	DEMAND %	DEMAND LOAD	kW
LIGHTING	0.00	1.25	0.0	kW
RECEPTALCES	0.00	1.00	0.0	kW
RECEPTACLES > 10000	0.00	0.50		
KITCHEN EQUIPMENT	0.00	0.65	0.0	kW
MISC.	19.60	1.00	19.6	kW
HVAC	0.00	1.00	0.0	kW
TOTAL kW DEMAND			19.6	kW
TOTAL DEMAND AMPS	@ 100%		23.58	AMPS

FULLY SPRINKLERED
BID DOCUMENTS
FOR CONSTRUCTION

Revisions: Date

CONSULTANTS:

ARCHITECT/ENGINEERS:

PARADIGM
ENGINEERS AND CONSTRUCTORS
200 Envoy Circle #201, Louisville KY 40299 – PH: 502.339.8511 – www.paradigmuso.com

Drawing Title: ELECTRICAL PANEL SCHEDULES

Approved Project Director

Control Number: VA256-13-C-0277

PO Number: 635-C35336

Project Title: REMODEL CARDIAC CATH LAB SUITE

Location: OKLAHOMA CITY VAMC, 921 NE 13TH STREET, OKLAHOMA CITY, OK 73104

Date: 05-21-2015 | Checked: WLM | Drawn: MMF

Project Number: 635-CS1-102

Building Number: F

Drawing Number: EP601

Office of Construction and Facilities Management
Department of Veterans Affairs

VA FORM 08-6231

PANEL "CL2"

CRITICAL X-RAY POWER

EXISTING RELOCATED PANEL

PANEL INFORMATION

MAIN TYPE	125A MCB		
VOLTAGE	120/ 208	VOLTS	3PH-4W
MOUNTING	RECESSED	MOUNT	
AIC RATING	10000	AIC	
ENCLOSURE TYPE	NEMA-1		

PANEL RATING & FEEDER

PANEL AMPACITY:		125 AMPS
PHASE CONDUTORS:	(3)	#1 THWN
NEUTRAL	(1)	#6 THWN
# OF SETS		(1 SET)
SOURCE	SEE RISER	

				LOAD IN VOLT AMPS (VA)						LOAD IN VOLT AMPS (VA)									
CKT	DESCRIPTION	CB AMPS	WIRE SIZE	LTG (125%)	RECEPT.	KITCHEN	HVAC	MISC	PHASE	MISC	HVAC	KITCHEN	RECEPT.	LTG (125%)	WIRE SIZE	CB AMPS	DESCRIPTON	CKT
1	PANEL "IPU4"	30	#10						A				360		#12	20	RECEPT, DEDICATED – PACS 1F123A	2
3	RECEPT – CATH LAB EAST STORAGE 1F124A	20	#12		720				B				360		#12	20	RECEPT, DEDICATED – PACS 1F123A	4
5	RECEPT – SOILED STORAGE 1F124D	20	#12		540				C				360		#12	20	RECEPT, DEDICATED – PACS 1F123A	6
7	RECEPT – LOCKER + TOILET – 1F125 + 1F126	20	#12		540				A				360		#12	20	RECEPT, DEDICATED – PACS 1F123A	8
9	RECEPT, CONVENIENCE – WEST CTRL 1F122B	20	#12		540				B						#12	20	EMERGENCY STOP BUTTON – WEST CTRL 1F122B	10
11	RECEPT, DEDICATED – WEST CTRL 1F122B	20	#12		360				C				360		#12	20	RECEPT, DEDICATED – EAST CTRL 1F124B	12
13	RECEPT, DEDICATED – WEST CTRL 1F122B	20	#12		360				A				360		#12	20	RECEPT, DEDICATED – EAST CTRL 1F124B	14
15	RECEPT, DEDICATED – WEST CTRL 1F122B	20	#12		360				B				360		#12	20	RECEPT, DEDICATED – EAST CTRL 1F124B	16
17	RECEPT, DEDICATED, LASER – WEST LAB 1F122	30	#10					2500	C						#12	20	EMERGENCY STOP BUTTON – EAST CTRL 1F124B	18
19								2500	A	180					#12	20	AHU-17 DDC PANEL *	20
21	RECEPT – CATH LAB WEST STORAGE 1F122A	20	#12		540				B					1158	#12	20	CATH LAB EAST LIGHTING *	22
23	RECEPT, CONVENIENCE – EAST CTRL 1F124B	20	#12		540				C					1404	#12	20	CATH LAB WEST LIGHTING *	24
25	RECEPT, DEDICATED, LASER – EAST LAB 1F124	30	#10					2500	A				1080		#12	20	RECEPT, CATH LAB EAST + EMERGENCY STOP	26
27								2500	B				1080		#12	20	RECEPT, CATH LAB WEST + EMERGENCY STOP	28
29	SPACE	–	–						C				410		#12	20	RECEPT, SCRUB ROOM + AUTO SINKS	30
TOTAL LOADS				0	4500	0	0	10000		180	0	0	5090	2562			TOTAL LOADS	

PANEL NOTES

* PROVIDE LOCKED HANDLE CIRCUIT BREAKER
NEW CIRCUIT BREAKER TYPE SHALL MATCH EXISTING.

LOAD CALCULATION (NEC 2008 – ARTICLE 220)

LOAD TYPE	LOAD (kVA)	DEMAND %	DEMAND LOAD	kW
LIGHTING	2.56	1.25	3.2	kW
RECEPTALCES	9.59	1.00	9.6	kW
RECEPTACLES > 10000	0.00	0.50		
KITCHEN EQUIPMENT	0.00	0.65	0.0	kW
MISC.	10.18	1.00	10.2	kW
HVAC	0.00	1.00	0.0	kW
TOTAL kW DEMAND			23.0	kW
TOTAL DEMAND AMPS	@ 100%		63.77	AMPS

PANEL "IPU4"

CRITICAL X-RAY POWER

EXISTING RELOCATED PANEL

PANEL INFORMATION

MAIN TYPE	30A MCB		
VOLTAGE	120/ 208	VOLTS	3PH-4W
MOUNTING	SURFACE	MOUNT	
AIC RATING	10000	AIC	
ENCLOSURE TYPE	NEMA-1		

PANEL RATING & FEEDER

PANEL AMPACITY:		30 AMPS
PHASE CONDUTORS:		[EXISTING] THWN
NEUTRAL		[EXISTING] THWN
# OF SETS		[EXISTING]
SOURCE	SEE RISER	

				LOAD IN VOLT AMPS (VA)						LOAD IN VOLT AMPS (VA)									
CKT	DESCRIPTION	CB AMPS	WIRE SIZE	LTG (125%)	RECEPT.	KITCHEN	HVAC	MISC	PHASE	MISC	HVAC	KITCHEN	RECEPT.	LTG (125%)	WIRE SIZE	CB AMPS	DESCRIPTON	CKT
1	RTLS AUTOMATED SUPPLY COMPUTER	20	#12					200	A						#12	20	SPARE	2
									A									
3	RTLS AUTOMATED SUPPLY	20	#12					700	A						#12	20	SPARE	4
									A									
5	RTLS AUTOMATED SUPPLY	20	#12					700	A						#12	20	SPARE	6
									A									
7	RTLS AUTOMATED SUPPLY	20	#12					700	A						#12	20	SPARE	8
									A									
9	RTLS AUTOMATED SUPPLY	20	#12					700	A						#12	20	SPARE	10
									A									

PANEL NOTES

EXISTING PANEL TO BE RELOCATED

THIS PANEL "IPU4" IS A 30-AMP MAIN WITH (1) HOT AND (1) NEUTRAL FEED FROM A 40-AMP MAIN. THE 2-POLE 30 AMP BREAKER IS FED WITH A HOT AND A NEUTRAL AND FEEDS A 3KVA TRANSFORMER, WHICH FEEDS THE BUSS BAR AND THE TRANSFORMER PRODUCES ITS OWN GROUND. EACH CIRCUIT NEEDS (2) SPACES, ONE FOR HOT AND ONE FOR NEUTRAL.

LOAD CALCULATION (NEC 2008 – ARTICLE 220)

LOAD TYPE	LOAD (kVA)	DEMAND %	DEMAND LOAD	kW
LIGHTING	0.00	1.25	0.0	kW
RECEPTACLES	0.00	1.00	0.0	kW
RECEPTACLES > 10000	0.00	0.50		
KITCHEN EQUIPMENT	0.00	0.65	0.0	kW
MISC.	3.00	1.00	3.0	kW
HVAC	0.00	1.00	0.0	kW
TOTAL kW DEMAND			3.0	kW
TOTAL DEMAND AMPS	@ 100%		8.33	AMPS

PANEL "IPU7"

CRITICAL X-RAY POWER

EXISTING RELOCATED PANEL

PANEL INFORMATION

MAIN TYPE	30A MCB		
VOLTAGE	120/ 208	VOLTS	3PH-4W
MOUNTING	SURFACE	MOUNT	
AIC RATING	10000	AIC	
ENCLOSURE TYPE	NEMA-1		

PANEL RATING & FEEDER

PANEL AMPACITY:		30 AMPS
PHASE CONDUTORS:		[EXISTING] THWN
NEUTRAL		[EXISTING] THWN
# OF SETS		[EXISTING]
SOURCE	SEE RISER	

				LOAD IN VOLT AMPS (VA)						LOAD IN VOLT AMPS (VA)									
CKT	DESCRIPTION	CB AMPS	WIRE SIZE	LTG (125%)	RECEPT.	KITCHEN	HVAC	MISC	PHASE	MISC	HVAC	KITCHEN	RECEPT.	LTG (125%)	WIRE SIZE	CB AMPS	DESCRIPTON	CKT
1	SPARE	20	#12						A	700					#12	20	RTLS AUTOMATED SUPPLY	2
									A									
3	SPARE	20	#12						A	400					#12	20	RTLS AUTOMATED SUPPLY COMPUTERS	4
									A									
5	SPARE	20	#12						A	700					#12	20	RTLS AUTOMATED SUPPLY	6
									A									
7	SPARE	20	#12						A	700					#12	20	RTLS AUTOMATED SUPPLY	8
									A									
9	SPARE	20	#12						A	350					#12	20	RTLS AUTOMATED SUPPLY	10
									A									

PANEL NOTES

EXISTING PANEL TO BE RELOCATED

THIS PANEL "IPU7" IS A 30-AMP MAIN WITH (1) HOT AND (1) NEUTRAL FEED FROM A 40-AMP MAIN. THE 2-POLE 30 AMP BREAKER IS FED WITH A HOT AND A NEUTRAL AND FEEDS A 3KVA TRANSFORMER, WHICH FEEDS THE BUSS BAR AND THE TRANSFORMER PRODUCES ITS OWN GROUND. EACH CIRCUIT NEEDS (2) SPACES, ONE FOR HOT AND ONE FOR NEUTRAL.

LOAD CALCULATION (NEC 2008 – ARTICLE 220)

LOAD TYPE	LOAD (kVA)	DEMAND %	DEMAND LOAD	kW
LIGHTING	0.00	1.25	0.0	kW
RECEPTACLES	0.00	1.00	0.0	kW
RECEPTACLES > 10000	0.00	0.50		
KITCHEN EQUIPMENT	0.00	0.65	0.0	kW
MISC.	2.85	1.00	2.9	kW
HVAC	0.00	1.00	0.0	kW
TOTAL kW DEMAND			2.9	kW
TOTAL DEMAND AMPS	@ 100%		7.91	AMPS

FULLY SPRINKLERED
BID DOCUMENTS
FOR CONSTRUCTION

Revisions	Date

CONSULTANTS:

ARCHITECT/ENGINEERS:

PARADIGM
ENGINEERS AND CONSTRUCTORS
200 Envoy Circle #201, Louisville KY 40299 – PH: 502.339.8511 – www.paradigmusa.com

19 May 2015
STATE OF KENTUCKY
WILLIAM LEE MOORE
VAN GUILDER, LEE
24,728
LICENSED
PROFESSIONAL ENGINEER

Drawing Title: ELECTRICAL PANEL SCHEDULES	Project Title: REMODEL CARDIAC CATH LAB SUITE	Project Number: 635-CS1-102	Office of Construction and Facilities Management
		Building Number: F	
Approved Project Director	Control Number: VA256-13-C-0277	Location: OKLAHOMA CITY VAMC, 921 NE 13TH STREET, OKLAHOMA CITY, OK 73104	Drawing Number: EP602
	PO Number: 635-C35336	Date: 05-21-2015 / Checked: WLM / Drawn: MMF	Department of Veterans Affairs

VA FORM 08-6231

PANEL "L11C"

NORMAL POWER

EXISTING PANEL

PANEL INFORMATION

MAIN TYPE	100A MCB		
VOLTAGE	120/ 208	VOLTS	3PH-4W
MOUNTING	SURFACE	MOUNT	
AIC RATING	10000	AIC	
ENCLOSURE TYPE	NEMA-1		

PANEL RATING & FEEDER

PANEL AMPACITY:		125 AMPS
PHASE CONDUTORS:	(3)	#1 THWN
NEUTRAL	(1)	#6 THWN
# OF SETS		(1 SET)
SOURCE	SEE RISER	

			LOAD IN VOLT AMPS (VA)						LOAD IN VOLT AMPS (VA)								
CKT	DESCRIPTION	CB AMPS	WIRE SIZE	LTG (125%)	RECEPT.	KITCHEN	HVAC	MISC	PHASE	MISC	HVAC	KITCHEN	RECEPT.	LTG (125%)	WIRE SIZE	CB AMPS	DESCRIPTON	CKT
1	[EXISTING LOAD]	20	#12		1080				A				1080		#12	20	[EXISTING LOAD]	2
3	[EXISTING LOAD]	20	#12		1080				B				1080		#12	20	[EXISTING LOAD]	4
5	[EXISTING LOAD]	20	#12		1080				C				1080		#12	20	[EXISTING LOAD]	6
7	[EXISTING LOAD]	20	#12					1000	A				1080		#12	20	[EXISTING LOAD]	8
9								1000	B				1080		#12	20	[EXISTING LOAD]	10
11	[EXISTING LOAD]	20	#12		1080				C				1080		#12	20	[EXISTING LOAD]	12
13	[EXISTING LOAD]	20	#12		1080				A	1000					#8	50	[EXISTING LOAD]	14
15	[EXISTING LOAD]	20	#12		1080				B	1000								16
17	[EXISTING LOAD]	20	#12		1080				C					666	#12	20	[NEW] CATH LAB LIGHTING *	18
19	[EXISTING LOAD]	20	#12		1080				A				180		#12	20	3RD FLOOR MECHANICAL CONVENIENCE RECEPTACLE *	20
21	[EXISTING LOAD]	20	#12		1080				B						–	–	SPACE	22
23	[EXISTING LOAD]	20	#12		1080				C						–	–	SPACE	24
25	[EXISTING LOAD]	20	#12		1080				A						–	–	SPACE	26
27	[EXISTING LOAD]	20	#12		1080				B						–	–	SPACE	28
29	[EXISTING LOAD]	20	#12		1080				C						–	–	SPACE	30
TOTAL LOADS				0	14040	0	0	2000		2000	0	0	6660	666			TOTAL LOADS	

PANEL NOTES

* PROVIDE NEW CIRCUIT BREAKER IN EXISTING PANEL.
NEW CIRCUIT BREAKER TYPE SHALL MATCH EXISTING.

LOAD CALCULATION (NEC 2008 – ARTICLE 220)

LOAD TYPE	LOAD (kVA)	DEMAND %	DEMAND LOAD	kW
LIGHTING	0.67	1.25	0.8	kW
RECEPTALCES	10.00	1.00	15.4	kW
RECEPTACLES > 10000	10.70	0.50		
KITCHEN EQUIPMENT	0.00	0.65	0.0	kW
MISC.	4.00	1.00	4.0	kW
HVAC	0.00	1.00	0.0	kW
TOTAL kW DEMAND			20.2	kW
TOTAL DEMAND AMPS	@ 100%		56.02	AMPS

PANEL "DPLS"

LIFE SAFETY POWER

EXISTING DISTRIBUTION PANEL

PANEL INFORMATION

MAIN TYPE	400A MLO		
VOLTAGE	277/ 480	VOLTS	3PH-4W
MOUNTING	SURFACE	MOUNT	
AIC RATING	14000 AIC		
ENCLOSURE TYPE	NEMA-1		

PANEL RATING & FEEDER

PANEL AMPACITY:	400 AMPS
PHASE CONDUTORS:	[EXISTING] THWN
NEUTRAL	[EXISTING] THWN
# OF SETS	[EXISTING]
SOURCE	

			LOAD IN VOLT AMPS (VA)						LOAD IN VOLT AMPS (VA)								
CKT	DESCRIPTION	CB AMPS	WIRE SIZE	LTG (125%)	RECEPT.	KITCHEN	HVAC	MISC	PHASE	MISC	HVAC	KITCHEN	RECEPT.	LTG (125%)	WIRE SIZE	CB AMPS	DESCRIPTON	CKT
1	SPACE	–	–						A						–	–	SPACE	2
3	SPACE	–	–						B						–	–	SPACE	4
5	SPACE	–	–						C						–	–	SPACE	6
7	SPACE	–	–						A						–	–	SPACE	8
9	SPACE	–	–						B						–	–	SPACE	10
11	SPACE	–	–						C						–	–	SPACE	12
13	SPACE	–	–						A						–	–	SPACE	14
15	SPACE	–	–						B						–	–	SPACE	16
17	SPACE	–	–						C						–	–	SPACE	18
19								133	A					6648				20
21	NEW XFMR "T12LS" FOR NEW PANEL "L12LS"	50	#8					133	B					6648	#6	60	PANEL "HB2LS"	22
23								133	C					6648				24
25								8864	A					11000				26
27	PANEL "HG2LS"	80	#4					8864	B					11000	#3	100	PANEL "H42LS"	28
29								8864	C					11000				30
31								11000	A					11000				32
33	PANEL "H22LS"	100	#3					11000	B					11000	#3	100	PANEL "H33LS"	34
35								11000	C					11000				36
37								11000	A					11000				38
39	PANEL "HB3LS"	100	#3					11000	B					11000	#3	100	[EXISTING LOAD]	40
41								11000	C					11000				42
TOTAL LOADS				0	0	0	0	92991		0	0	0	0	118944			TOTAL LOADS	

PANEL NOTES

EXISTING PANEL

NEW CIRCUIT BREAKER TYPE SHALL MATCH EXISTING.

LOAD CALCULATION (NEC 2008 – ARTICLE 220)

LOAD TYPE	LOAD (kVA)	DEMAND %	DEMAND LOAD	kW
LIGHTING	118.94	1.25	148.7	kW
RECEPTALCES	0.00	1.00	0.0	kW
RECEPTACLES > 10000	0.00	0.50		
KITCHEN EQUIPMENT	0.00	0.65	0.0	kW
MISC.	92.99	1.00	93.0	kW
HVAC	0.00	1.00	0.0	kW
TOTAL kW DEMAND			241.7	kW
TOTAL DEMAND AMPS	@ 100%		290.69	AMPS

PANEL "L12LS"

LIFE SAFETY POWER

(NEW PANEL)

PANEL INFORMATION

MAIN TYPE	100A MCB		
VOLTAGE	120/ 208	VOLTS	3PH-4W
MOUNTING	SURFACE	MOUNT	
AIC RATING	10000	AIC	
ENCLOSURE TYPE	NEMA-1		

PANEL RATING & FEEDER

PANEL AMPACITY:		100 AMPS
PHASE CONDUTORS:	(3)	#3 THWN
NEUTRAL	(1)	#3 THWN
# OF SETS		(1 SET)
SOURCE	SEE RISER	

			LOAD IN VOLT AMPS (VA)						LOAD IN VOLT AMPS (VA)								
CKT	DESCRIPTION	CB AMPS	WIRE SIZE	LTG (125%)	RECEPT.	KITCHEN	HVAC	MISC	PHASE	MISC	HVAC	KITCHEN	RECEPT.	LTG (125%)	WIRE SIZE	CB AMPS	DESCRIPTON	CKT
1	CATH LAB EMERGENCY LIGHTING**	20	#12	316					A						–	–	SPACE	2
3	SPACE	–	–						B						–	–	SPACE	4
5	SPACE	–	–						C						–	–	SPACE	6
7	SPACE	–	–						A						–	–	SPACE	8
9	SPACE	–	–						B						–	–	SPACE	10
11	SPACE	–	–						C						–	–	SPACE	12
13	SPACE	–	–						A						–	–	SPACE	14
15	SPACE	–	–						B						–	–	SPACE	16
17	SPACE	–	–						C						–	–	SPACE	18
19	SPACE	–	–						A						–	–	SPACE	20
21	SPACE	–	–						B						–	–	SPACE	22
23	SPACE	–	–						C						–	–	SPACE	24
TOTAL LOADS				316	0	0	0	0		0	0	0	0	0			TOTAL LOADS	

PANEL NOTES

NEW PANEL
LABEL BRANCHES FEEDING EMERGENCY LIGHTS
** LOCKED HANDLE CIRCUIT BREAKER

REFER TO SPECIFICATION 262416 FOR
ADDITIONAL PANELBOARD INFORMATION.

LOAD CALCULATION (NEC 2008 – ARTICLE 220)

LOAD TYPE	LOAD (kVA)	DEMAND %	DEMAND LOAD	kW
LIGHTING	0.32	1.25	0.4	kW
RECEPTALCES	0.00	1.00	0.0	kW
RECEPTACLES > 10000	0.00	0.50		
KITCHEN EQUIPMENT	0.00	0.65	0.0	kW
MISC.	0.00	1.00	0.0	kW
HVAC	0.00	1.00	0.0	kW
TOTAL kW DEMAND			0.4	kW
TOTAL DEMAND AMPS	@ 100%		1.10	AMPS

FULLY SPRINKLERED
BID DOCUMENTS
FOR CONSTRUCTION

Revisions:	Date

CONSULTANTS:

ARCHITECT/ENGINEERS:

PARADIGM
ENGINEERS AND CONSTRUCTORS
200 Envoy Circle #201, Louisville KY 40299 – PH: 502.339.8511 – www.paradigmusa.com

STATE OF KENTUCKY – BLAIRE C. VAN GANSBEKE – 34,739 – LICENSED PROFESSIONAL ENGINEER – 19 MAY 2015

Drawing Title: ELECTRICAL PANEL SCHEDULES	Project Title: REMODEL CARDIAC CATH LAB SUITE	Project Number: 635-CS1-102	Office of Construction and Facilities Management
		Building Number: F	
Approved Project Director	Control Number: VA256-13-C-0277	Location: OKLAHOMA CITY VAMC, 921 N.E. 13TH STREET, OKLAHOMA CITY, OK 73104	Drawing Number: EP603
	PO Number: 635-C35336	Date: 05-21-2015 / Checked: WLM / Drawn: MMF	Department of Veterans Affairs

VA FORM 08-6231

REFERENCE NOTES

REFER TO SHEER ED101 FOR DEMOLITION WORK ON FIRST FLOOR.

REFER TO SHEET EL101 FOR LIGHTING WORK ON FIRST FLOOR.

REFER TO SHEETS EP101-A, EP101-B, AND EP102 FOR POWER WORK ON FIRST FLOOR.

REFER TO SHEET EP103 FOR POWER WORK AT BASEMENT LEVEL.

REFER TO SHEET EM102 FOR MECHANICAL EQUIPMENT POWER WORK ON THIRD FLOOR.

REFER TO SHEETS ET101 AND ET102 FOR TELECOMMUNICATIONS WORK ON FIRST FLOOR.

REFER TO SHEET EY101 FOR SYSTEMS WORK ON FIRST FLOOR.

REFER TO SHEET FA101 FOR FIRE ALARM WORK ON FIRST FLOOR..

NOTES

A. REFER TO DWG. E-001 FOR LEGEND, ABBREVIATIONS, AND GENERAL NOTES RELATED TO THIS SHEET.

KEY NOTES

1. PROVIDE JUNCTION BOX WITH 120 VOLT CONNECTION TO AIR TERMINAL BOX AS INDICATED, FIELD COORDINATE EXACT LOCATION WITH MECHANICAL CONTRACTOR PRIOR TO INSTALLATION. PROVIDE MANUAL MOTOR STARTER SWITCH AS INDICATED, REFER TO SHEET EP503 FOR FURTHER INFORMATION. (TYPICAL)

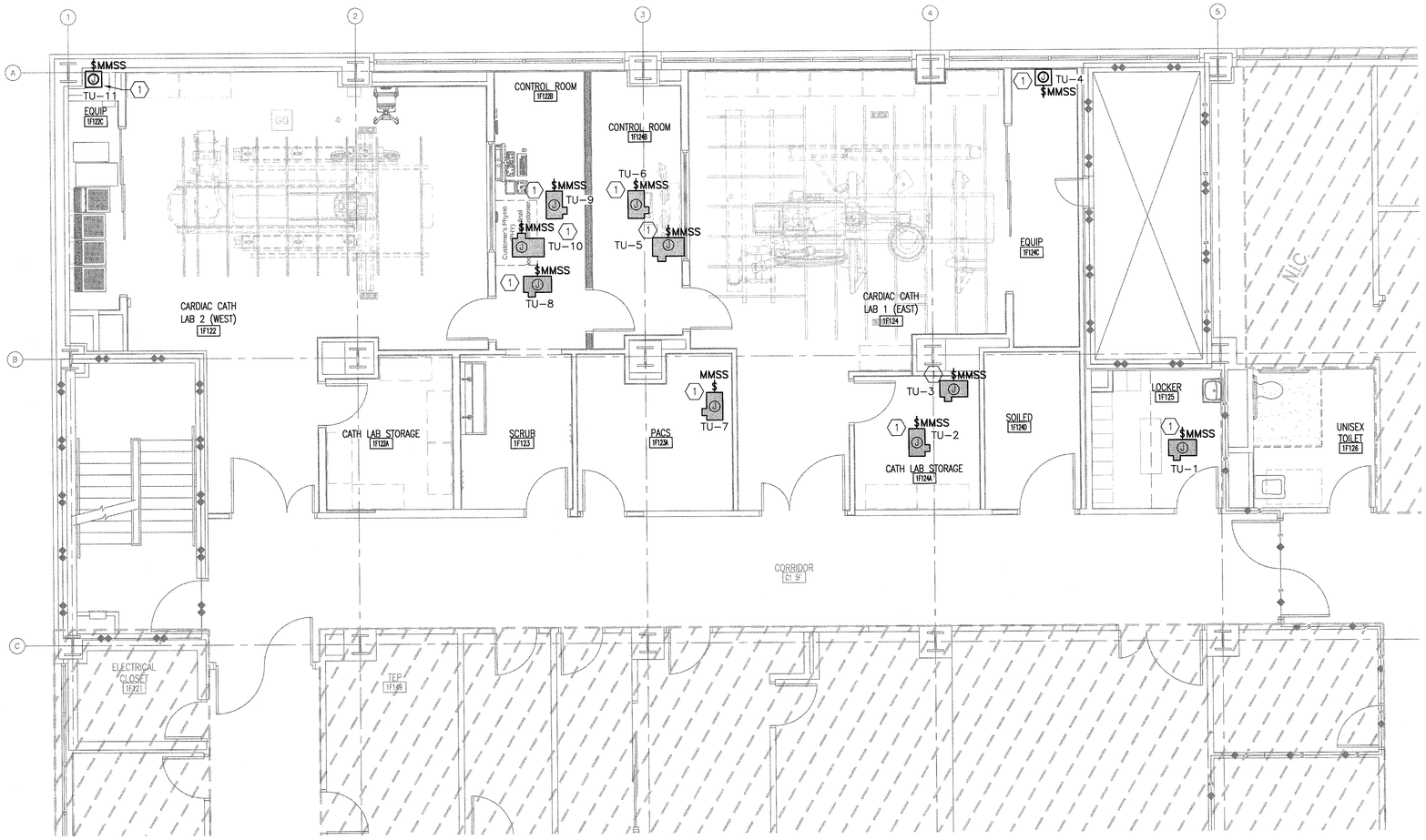

F1 PARTIAL FIRST FLOOR PLAN
SCALE 1/4" = 1'-0"

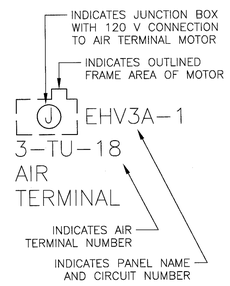

D8 AIR TERMINAL DETAIL
SCALE: NOT TO SCALE

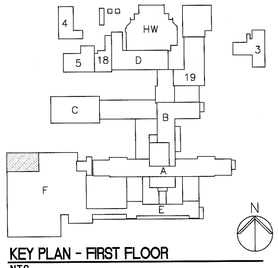

KEY PLAN - FIRST FLOOR
N.T.S.

FULLY SPRINKLERED
BID DOCUMENTS
FOR CONSTRUCTION

Revisions:	Date

CONSULTANTS:

ARCHITECT/ENGINEERS:

PARADIGM
ENGINEERS AND CONSTRUCTORS
200 Envoy Circle #201, Louisville KY 40299 – PH: 502.339.8511 – www.paradigmusa.com

STATE OF KENTUCKY
BLAINE CASSEL VAN GANSBEKE
24,738
LICENSED PROFESSIONAL ENGINEER

Drawing Title: ELECTRICAL POWER PLAN MECHANICAL EQUIPMENT FIRST FLOOR	Project Title: REMODEL CARDIAC CATH LAB SUITE	Project Number: 635-CS1-102	Office of Construction and Facilities Management
Approved Project Director	Control Number: VA256-13-C-0277	Building Number: F	
	PO Number: 635-C35336	Location: OKLAHOMA CITY VAMC, 921 N.E. 13TH STREET, OKLAHOMA CITY, OK 73104	Drawing Number: EM101
		Date: 05-21-2015 / Checked: WLM / Drawn: MMF	Department of Veterans Affairs

VA FORM 08-6231

REFERENCE NOTES

REFER TO SHEER ED101 FOR DEMOLITION WORK ON FIRST FLOOR.

REFER TO SHEET EL101 FOR LIGHTING WORK ON FIRST FLOOR.

REFER TO SHEETS EP101–A, EP101–B, AND EP102 FOR POWER WORK ON FIRST FLOOR.

REFER TO SHEET EP103 FOR POWER WORK AT BASEMENT LEVEL.

REFER TO SHEET EM101 FOR MECHANICAL EQUIPMENT POWER WORK ON FIRST FLOOR.

REFER TO SHEETS ET101 AND ET102 FOR TELECOMMUNICATIONS WORK ON FIRST FLOOR.

REFER TO SHEET EY101 FOR SYSTEMS WORK ON FIRST FLOOR.

REFER TO SHEET FA101 FOR FIRE ALARM WORK ON FIRST FLOOR..

GENERAL ELECTRICAL POWER PLAN NOTES

A. REFER TO E–001 FOR ELECTRICAL LEGEND, GENERAL NOTES, AND ABBREVIATIONS.

B. COORDINATE EXACT LOCATIONS OF MECHANICAL EQUIPMENT WITH MECHANICAL CONTRACTOR AT SITE PRIOR TO INSTALLATION.

ELECTRICAL POWER PLAN NOTES

1. LOCATIONS OF EQUIPMENT SHOWN ARE APPROXIMATE, COORDINATE EXACT LOCATIONS AT SITE WITH EQUIPMENT PROVIDER PRIOR TO INSTALLATION (TYPICAL)
2. PROVIDE GFI RECEPTACLE MOUNTED AT UNIT, COORDINATE EXACT LOCATION AT SITE PRIOR TO INSTALLATION.
3. PROVIDE LOCKED HANDLE CIRCUIT BREAKER WITHIN PANEL.
4. VFD FURNISHED AND INSTALLED BY ELECTRICAL CONTRACTOR, SEE SHEET EM601 FOR ADDITIONAL INFORMATION.
5. DISCONNECT EXISTING BRANCH CIRCUIT FROM EXISTING MOTOR AND RE–CONNECT TO NEW MOTOR AS INDICATED.
6. DISCONNECT AND REMOVE EXISTING CIRCUIT BREAKER FEEDING CIRCUITS 25,27,29 AND REPLACE WITH NEW 15 AMP 3–POLE CIRCUIT BREAKER. CONNECT NEW CIRCUIT BREAKER TO EXISTING BRANCH CIRCUITS IN PANEL.

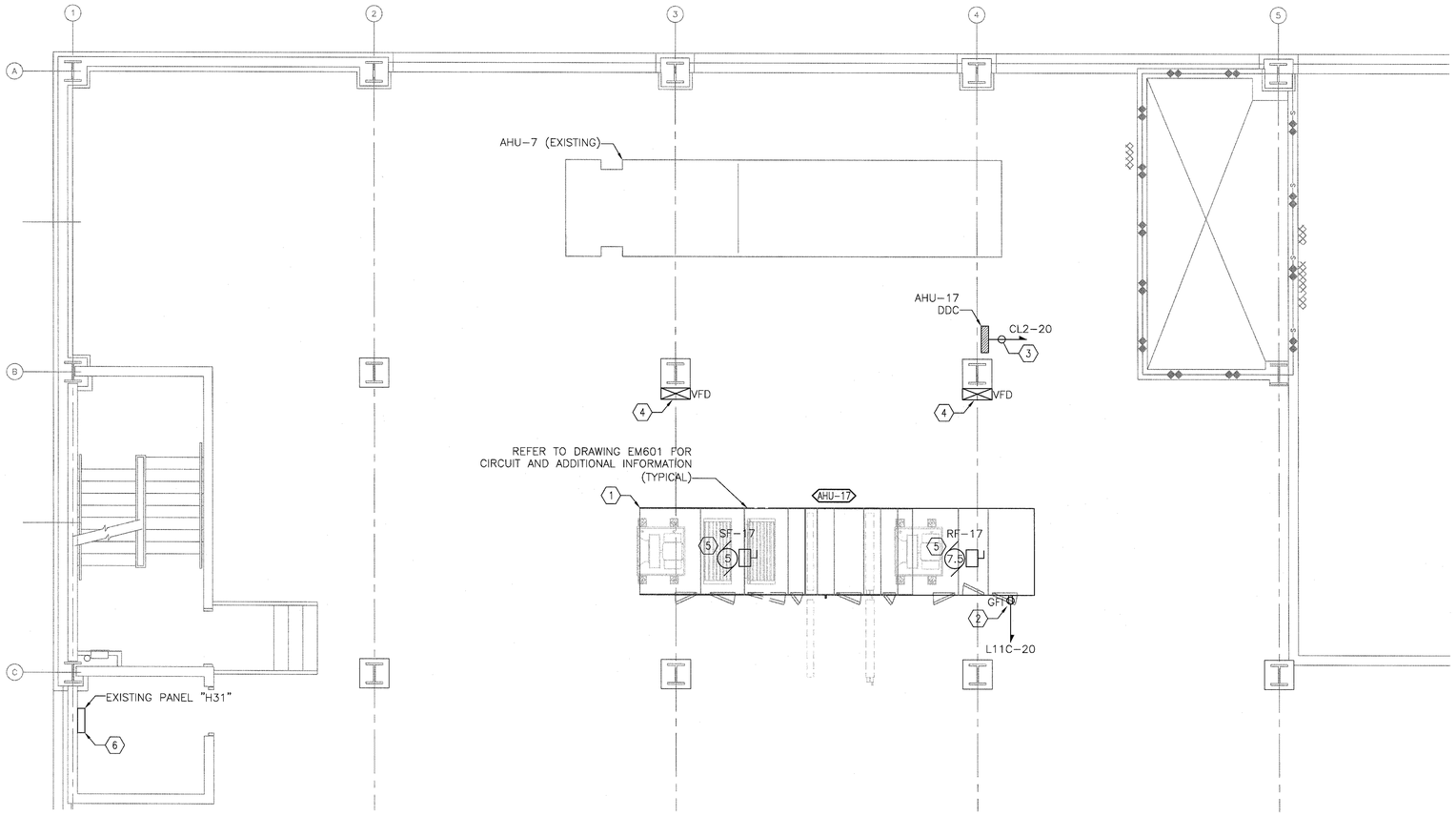

F1 PARTIAL THIRD FLOOR PLAN
SCALE 1/4" = 1'-0"

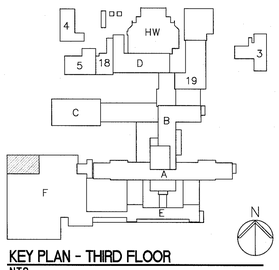

KEY PLAN - THIRD FLOOR
N.T.S.

FULLY SPRINKLERED
BID DOCUMENTS
FOR CONSTRUCTION

Revisions:	Date

CONSULTANTS:

ARCHITECT/ENGINEERS:

PARADIGM
ENGINEERS AND CONSTRUCTORS
200 Envoy Circle #201, Louisville KY 40299 – PH: 502.339.8511 – www.paradigmusa.com

Drawing Title	ELECTRICAL POWER PLAN MECHANICAL EQUIPMENT THIRD FLOOR
Approved Project Director	
Control Number	VA256-13-C-0277
PO Number	635-C35336
Project Title	REMODEL CARDIAC CATH LAB SUITE
Location	OKLAHOMA CITY VAMC, 921 N.E. 13TH STREET, OKLAHOMA CITY, OK 73104
Date	05-21-2015
Checked	WLM
Drawn	MMF
Project Number	635-CS1-102
Building Number	F
Drawing Number	EM102

Office of Construction and Facilities Management
Department of Veterans Affairs

VA FORM 08–6231

AIR TERMINAL UNIT SCHEDULE

ITEM	DESCRIPTION	VOLTAGE	PHASE	CONNECTION TYPE	MOUNTING HEIGHT	PANEL FED FROM	CIRCUIT NUMBER	DISCONNECTING MEANS	NEMA TYPE	CONDUIT SIZE	WIRE SIZE	GROUND SIZE	CIRCUIT BREAKER	NOTES:
TU-1	SINGLE DUCT AIR TERMINAL (NEW)	120	1	HARD WIRED CONNECTION TO JUNCTION BOX	ACCESSIBLE CEILING SPACE	EMERGENCY EQUIPMENT BRANCH	FIELD COORDINATE AT SITE	20 AMP MANUAL MOTOR STARTER SWITCH	NEMA 1	3/4"	2#12	1#12	20/1	1,2
TU-2	SINGLE DUCT AIR TERMINAL (NEW)	120	1	HARD WIRED CONNECTION TO JUNCTION BOX	ACCESSIBLE CEILING SPACE	EMERGENCY EQUIPMENT BRANCH	FIELD COORDINATE AT SITE	20 AMP MANUAL MOTOR STARTER SWITCH	NEMA 1	3/4"	2#12	1#12	20/1	1,2
TU-3	SINGLE DUCT AIR TERMINAL (NEW)	120	1	HARD WIRED CONNECTION TO JUNCTION BOX	ACCESSIBLE CEILING SPACE	EMERGENCY EQUIPMENT BRANCH	FIELD COORDINATE AT SITE	20 AMP MANUAL MOTOR STARTER SWITCH	NEMA 1	3/4"	2#12	1#12	20/1	1,2
TU-4	SINGLE DUCT AIR TERMINAL (NEW)	120	1	HARD WIRED CONNECTION TO JUNCTION BOX	ACCESSIBLE CEILING SPACE	EMERGENCY EQUIPMENT BRANCH	FIELD COORDINATE AT SITE	20 AMP MANUAL MOTOR STARTER SWITCH	NEMA 1	3/4"	2#12	1#12	20/1	1,2
TU-5	SINGLE DUCT AIR TERMINAL (NEW)	120	1	HARD WIRED CONNECTION TO JUNCTION BOX	ACCESSIBLE CEILING SPACE	EMERGENCY EQUIPMENT BRANCH	FIELD COORDINATE AT SITE	20 AMP MANUAL MOTOR STARTER SWITCH	NEMA 1	3/4"	2#12	1#12	20/1	1,2
TU-6	SINGLE DUCT AIR TERMINAL (NEW)	120	1	HARD WIRED CONNECTION TO JUNCTION BOX	ACCESSIBLE CEILING SPACE	EMERGENCY EQUIPMENT BRANCH	FIELD COORDINATE AT SITE	20 AMP MANUAL MOTOR STARTER SWITCH	NEMA 1	3/4"	2#12	1#12	20/1	1,2
TU-7	SINGLE DUCT AIR TERMINAL (NEW)	120	1	HARD WIRED CONNECTION TO JUNCTION BOX	ACCESSIBLE CEILING SPACE	EMERGENCY EQUIPMENT BRANCH	FIELD COORDINATE AT SITE	20 AMP MANUAL MOTOR STARTER SWITCH	NEMA 1	3/4"	2#12	1#12	20/1	1,2
TU-8	SINGLE DUCT AIR TERMINAL (NEW)	120	1	HARD WIRED CONNECTION TO JUNCTION BOX	ACCESSIBLE CEILING SPACE	EMERGENCY EQUIPMENT BRANCH	FIELD COORDINATE AT SITE	20 AMP MANUAL MOTOR STARTER SWITCH	NEMA 1	3/4"	2#12	1#12	20/1	1,2
TU-9	SINGLE DUCT AIR TERMINAL (NEW)	120	1	HARD WIRED CONNECTION TO JUNCTION BOX	ACCESSIBLE CEILING SPACE	EMERGENCY EQUIPMENT BRANCH	FIELD COORDINATE AT SITE	20 AMP MANUAL MOTOR STARTER SWITCH	NEMA 1	3/4"	2#12	1#12	20/1	1,2
TU-10	SINGLE DUCT AIR TERMINAL (NEW)	120	1	HARD WIRED CONNECTION TO JUNCTION BOX	ACCESSIBLE CEILING SPACE	EMERGENCY EQUIPMENT BRANCH	FIELD COORDINATE AT SITE	20 AMP MANUAL MOTOR STARTER SWITCH	NEMA 1	3/4"	2#12	1#12	20/1	1,2
TU-11	SINGLE DUCT AIR TERMINAL (NEW)	120	1	HARD WIRED CONNECTION TO JUNCTION BOX	ACCESSIBLE CEILING SPACE	EMERGENCY EQUIPMENT BRANCH	FIELD COORDINATE AT SITE	20 AMP MANUAL MOTOR STARTER SWITCH	NEMA 1	3/4"	2#12	1#12	20/1	1,2

NOTES:
1. CONNECT NEW TERMINAL UNIT TO EXISTING EMERGENCY EQUIPMENT BRANCH ELECTRICAL PANEL, FIELD COORDINATE AT SITE THE CIRCUIT NUMBER.
2. PROVIDE 20 AMP, MANUAL MOTOR STARTER SWITCH WITH THERMAL OVER LOADS AT MOTOR.

MOTOR SCHEDULE

ITEM	DESCRIPTION	VOLTAGE	PHASE	HP	STARTER	DISCONNECT SWITCH	NEMA TYPE	CONNECTION TYPE	MOUNTING HEIGHT	PANEL FED FROM	CIRCUIT NUMBER	CONDUIT SIZE	WIRE SIZE	GROUND SIZE	NOTE
SF-17	SUPPLY FAN	480	3	5	VARIABLE SPEED DRIVE BY E.C.	30A N/F DISCONNECT AT MOTOR	NEMA 1	FLEXIBLE CONDUIT FROM DISCONNECT SWITCH TO MOTOR	COORDINATE AT SITE	SEE NOTE 1	SEE NOTE 1	EXISTING	(3)#12	EXISTING	1
RF-17	RETURN FAN	480	3	7.5	VARIABLE SPEED DRIVE BY E.C.	30A N/F DISCONNECT AT MOTOR	NEMA 1	FLEXIBLE CONDUIT FROM DISCONNECT SWITCH TO MOTOR	COORDINATE AT SITE	SEE NOTE 1	SEE NOTE 1	EXISTING	(3)#12	EXISTING	1

NOTES:
1. THE ELECTRICAL CONTRACTOR SHALL RE-USE EXISTING CIRCUITING AT SITE WHERE APPLICABLE, FIELD COORDINATE AT SITE.

GENERAL NOTES

A. THE ELECTRICAL CONTRACTOR SHALL PROVIDE EMPTY CONDUITS AS INDICATED ON SCHEDULE. ELECTRICAL CONTRACTOR SHALL PROVIDE PULL STRINGS IN ALL CONDUITS.

B. PULLING OF CABLE SHALL BE BY OTHERS. REFER TO PHILIPS VENDOR DRAWINGS ORDER NUMBER 6600223712.010000, DRAWING NUMBER N-WES140206A, SHEETS E3 AND E4 FOR WIRE TYPE AND ADDITIONAL INFORMATION.

C. ALL CONDUIT RUNS SHALL EMANATE FROM EQUIPMENT TAG AS INDICATED ON SCHEDULE.

D. REFER TO DRAWING EP101 FOR LOCATIONS OF MEDICAL EQUIPMENT.

E. MEDICAL EQUIPMENT LISTED SHALL BE PROVIDED BY MEDICAL EQUIPMENT SUPPLIER UNLESS NOTED OTHERWISE.

FULLY SPRINKLERED
BID DOCUMENTS
FOR CONSTRUCTION

Revisions: | Date

CONSULTANTS:

ARCHITECT/ENGINEERS:

PARADIGM
ENGINEERS AND CONSTRUCTORS
200 Envoy Circle #201, Louisville KY 40299 – PH: 502.339.8511 – www.paradigmusa.com

19 May 2015
STATE OF KENTUCKY
BLAINE CASSEL VAN GAMBEKE
24,723
LICENSED
PROFESSIONAL ENGINEER

Drawing Title	ELECTRICAL POWER SCHEDULES MECHANICAL EQUIPMENT
Approved Project Director	
Control Number	VA256-13-C-0277
PO Number	635-C35336
Project Title	REMODEL CARDIAC CATH LAB SUITE
Location	OKLAHOMA CITY VAMC, 921 N.E. 13TH STREET, OKLAHOMA CITY, OK 73104
Date	05-21-2015
Checked	WLM
Drawn	MMF
Project Number	635-CS1-102
Building Number	F
Drawing Number	EM601

Office of Construction and Facilities Management
Department of Veterans Affairs

VA FORM 08-6231

REFERENCE NOTES

REFER TO SHEER ED101 FOR DEMOLITION WORK ON FIRST FLOOR.

REFER TO SHEET EL101 FOR LIGHTING WORK ON FIRST FLOOR.

REFER TO SHEETS EP101–A, EP101–B, AND EP102 FOR POWER WORK ON FIRST FLOOR.

REFER TO SHEET EP103 FOR POWER WORK AT BASEMENT LEVEL.

REFER TO SHEET EM101 FOR MECHANICAL EQUIPMENT POWER WORK ON FIRST FLOOR.

REFER TO SHEET EM102 FOR MECHANICAL EQUIPMENT POWER WORK ON THIRD FLOOR.

REFER TO SHEET EY101 FOR SYSTEMS WORK ON FIRST FLOOR.

REFER TO SHEET FA101 FOR FIRE ALARM WORK ON FIRST FLOOR..

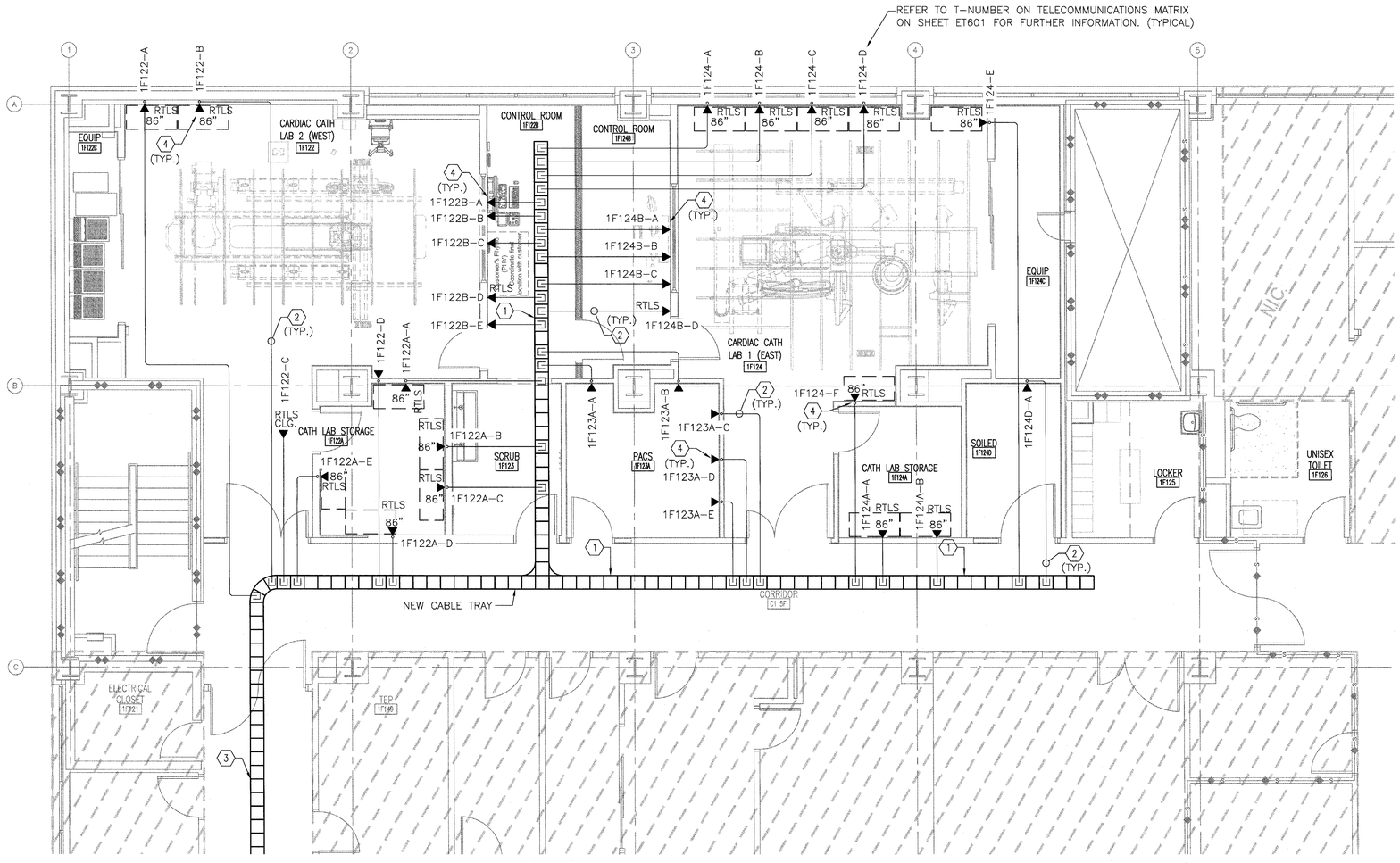

F1 PARTIAL FIRST FLOOR PLAN
SCALE 1/4" = 1'-0"

GENERAL ELECTRICAL TELECOMMUNICATIONS PLAN NOTES

A. REFER TO SHEET E–001 FOR ELECTRICAL LEGEND, GENERAL NOTES, AND ABBREVIATIONS.

B. ALL PHONE/DATA LOCATIONS TO BE (4) JACK PACE PLATES; REFER TO SPECIFICATION 270511 FOR DETAILS.

C. ALL CABLE TRAYS TO BE 12" WIDE UNLESS NOTED OTHERWISE.

D. CONDUIT USED SHALL BE 1" EMT.

E. PROVIDE GROUNDING SYSTEM PER NEC 250.96.

F. THE ELECTRICAL CONTRACTOR SHALL COORDINATE AND PROVIDE A COMPLETE ASSEMBLY INCLUDING MOUNTING BRACKETS, THREADED RODS, MOUNTING ASSEMBLIES, RADIUS FITTINGS AND ALL OTHER FOR A COMPLETE INSTALLATION OF THE NEW CABLE TRAY SYSTEM.

G. THE ELECTRICAL CONTRACTOR SHALL PROVIDE JUNCTION BOX AT EACH DATA OUTLET LOCATION AND ROUTE 1 INCH EMPTY CONDUIT FROM JUNCTION BOX (DATA OUTLET) UP INTO THE ACCESSIBLE CEILING SPACE WITH BUSH CONDUIT END AND PULL STRINGS WITHIN THE EMPTY CONDUIT SYSTEM.

H. THE TELE / COMMUNICATIONS CONTRACTOR SHALL PROVIDE FINISH COVER PLATE AT EACH DATA OUTLET, REFER TO DRAWING ET501 FOR FURTHER INFORMATION.

I. THE TELE / COMMUNICATIONS CONTRACTOR SHALL PROVIDE FULLY ENGINEERED SHOP DRAWING SUBMITTALS OF PROPOSED WORK PRIOR TO BEGINNING CONSTRUCTION. THE SHOP DRAWING SUBMITTALS SHALL BE SIGNED BY LICENSED RCDD (REGISTERED COMMUNICATIONS DISTRIBUTION DESIGNER).

J. REFER TO TELECOMMUNICATIONS MATRIX ON SHEET ET601 FOR FURTHER INFORMATION.

ELECTRICAL TELECOMMUNICATIONS PLAN NOTES ⟨⟩

1. PROVIDE NEW CABLE TRAY AS INDICATED. BASIS OF DESIGN: LEGRAND MODEL NO. 7A20B SERIES. CABLE TRAY SHALL BE CONSTRUCTED OF ALUMINUM AND SHALL BE 12" WIDE X 6" HIGH WITH LADDER SUPPORTS EVERY 12" ON CENTER.

2. THE ELECTRICAL CONTRACTOR SHALL ROUTE 1 INCH EMPTY CONDUIT FROM JUNCTION BOX (DATA OUTLET) UP INTO THE ACCESSIBLE SPACE OVER TO CABLE TRAY WITH BUSH CONDUIT END, PROVIDE PULL STRINGS WITHIN THE EMPTY CONDUIT SYSTEM (TYPICAL). THE TELE / COMMUNICATIONS CONTRACTOR SHALL PULL CATEGORY 6 CABLE FROM EACH DATA OUTLET TO EXISTING SERVER EQUIPMENT AND MAKE FINAL TERMINATIONS, PROVIDE FINISH COVER PLATE AT EACH DATA OUTLET. REFER TO DETAILS ON DRAWING ET501 FOR FURTHER INFORMATION.

3. REFER TO SHEET ET102 FOR CONTINUATION OF NEW CABLE TRAY SYSTEM TO IDF ROOM NO. 1F161A.

4. PROVIDE (4) PORT COVERPLATE. REFER TO DETAIL E6/ET501 FOR FURTHER INFORMATION. (TYPICAL)

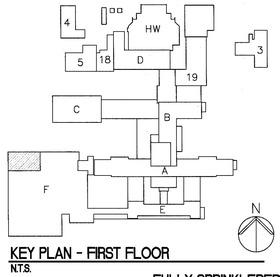

KEY PLAN - FIRST FLOOR
N.T.S.

FULLY SPRINKLERED
BID DOCUMENTS
FOR CONSTRUCTION

Revisions:	Date

CONSULTANTS:

ARCHITECT/ENGINEERS:

PARADIGM ENGINEERS AND CONSTRUCTORS
200 Envoy Circle #201, Louisville KY 40299 – PH: 502.339.8511 – www.paradigmusa.com

STATE OF KENTUCKY — BLAIRE CARROLL VAN GAMBEKE — 24,738 — LICENSED PROFESSIONAL ENGINEER

Drawing Title: TELECOMMUNICATIONS PLAN FIRST FLOOR		Project Title: REMODEL CARDIAC CATH LAB SUITE	Project Number: 635-CS1-102
			Building Number: F
Approved Project Director	Control Number: VA256-13-C-0277	Location: OKLAHOMA CITY VAMC, 921 N.E. 13TH STREET, OKLAHOMA CITY, OK 73104	Drawing Number: ET101
	PO Number: 635-C35336	Date: 05-21-2015 / Checked: WLM / Drawn: MMF	

Office of Construction and Facilities Management
Department of Veterans Affairs

VA FORM 08–6231

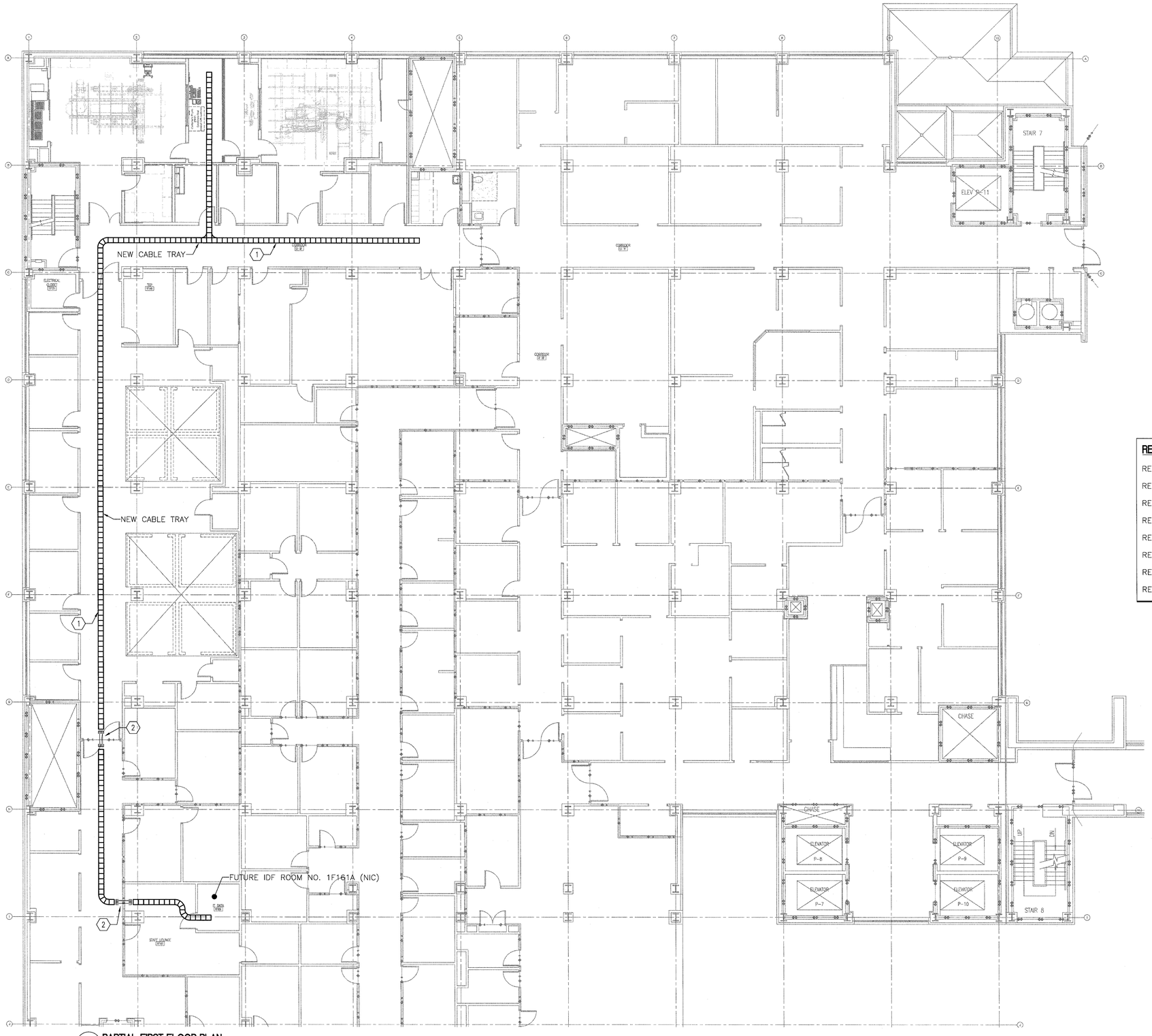

F1 PARTIAL FIRST FLOOR PLAN
SCALE 1/4" = 1'-0"

GENERAL ELECTRICAL TELECOMMUNICATIONS PLAN NOTES

A. REFER TO SHEET E-001 FOR ELECTRICAL LEGEND, GENERAL NOTES, AND ABBREVIATIONS.

B. ALL PHONE/DATA LOCATIONS TO BE (4) JACK PACE PLATES; REFER TO SPECIFICATION 270511 FOR DETAILS.

C. ALL CABLE TRAYS TO BE 12" WIDE UNLESS NOTED OTHERWISE.

D. CONDUIT USED SHALL BE 1" EMT.

E. PROVIDE GROUNDING SYSTEM PER NEC 250.96.

F. THE ELECTRICAL CONTRACTOR SHALL COORDINATE AND PROVIDE A COMPLETE ASSEMBLY INCLUDING MOUNTING BRACKETS, THREADED RODS, MOUNTING ASSEMBLIES, RADIUS FITTINGS AND ALL OTHER FOR A COMPLETE INSTALLATION OF THE NEW CABLE TRAY SYSTEM.

G. THE ELECTRICAL CONTRACTOR SHALL PROVIDE JUNCTION BOX AT EACH DATA OUTLET LOCATION AND ROUTE 1 INCH EMPTY CONDUIT FROM JUNCTION BOX (DATA OUTLET) UP INTO THE ACCESSIBLE CEILING SPACE WITH BUSH CONDUIT END AND PULL STRINGS WITHIN THE EMPTY CONDUIT SYSTEM.

H. THE TELE / COMMUNICATIONS CONTRACTOR SHALL PROVIDE FINISH COVER PLATE AT EACH DATA OUTLET, REFER TO DRAWING ET501 FOR FURTHER INFORMATION.

I. THE TELE / COMMUNICATIONS CONTRACTOR SHALL PROVIDE FULLY ENGINEERED SHOP DRAWING SUBMITTALS OF PROPOSED WORK PRIOR TO BEGINNING CONSTRUCTION. THE SHOP DRAWING SUBMITTALS SHALL BE SIGNED BY LICENSED RCDD (REGISTERED COMMUNICATIONS DISTRIBUTION DESIGNER).

ELECTRICAL TELECOMMUNICATIONS PLAN NOTES

1. PROVIDE NEW CABLE TRAY AS INDICATED. BASIS OF DESIGN: LEGRAND MODEL NO. 7A20B SERIES. CABLE TRAY SHALL BE CONSTRUCTED OF ALUMINUM AND SHALL BE 12" WIDE X 6" HIGH WITH LADDER SUPPORTS EVERY 12" ON CENTER.

2. PROVIDE (2) 4" EMPTY CONDUIT SLEEVES THROUGH FIRE RATED PARTITION. PROVIDE PULL STRINGS WITHIN THE EMPTY CONDUITS. PROVIDE FIRE STOPPING WHEN PASSING THROUGH FIRE RATED PARTITION.

REFERENCE NOTES

REFER TO SHEER ED101 FOR DEMOLITION WORK ON FIRST FLOOR.

REFER TO SHEET EL101 FOR LIGHTING WORK ON FIRST FLOOR.

REFER TO SHEETS EP101-A, EP101-B, AND EP102 FOR POWER WORK ON FIRST FLOOR.

REFER TO SHEET EP103 FOR POWER WORK AT BASEMENT LEVEL.

REFER TO SHEET EM101 FOR MECHANICAL EQUIPMENT POWER WORK ON FIRST FLOOR.

REFER TO SHEET EM102 FOR MECHANICAL EQUIPMENT POWER WORK ON THIRD FLOOR.

REFER TO SHEET EY101 FOR SYSTEMS WORK ON FIRST FLOOR.

REFER TO SHEET FA101 FOR FIRE ALARM WORK ON FIRST FLOOR..

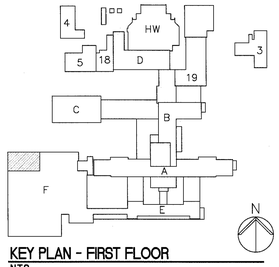

KEY PLAN - FIRST FLOOR
N.T.S.

FULLY SPRINKLERED
BID DOCUMENTS
FOR CONSTRUCTION

Revisions:	Date

CONSULTANTS:

ARCHITECT/ENGINEERS:

PARADIGM
ENGINEERS AND CONSTRUCTORS
200 Envoy Circle #201, Louisville KY 40299 – PH: 502.339.8511 – www.paradigmusa.com

STATE OF KENTUCKY
BLAIRE CASSEL VAN GANSBEKE
24,738
LICENSED
PROFESSIONAL ENGINEER
18 May 2015

Drawing Title	Project Title	Project Number
TELECOMMUNICATIONS ROUTING PLAN FIRST FLOOR	REMODEL CARDIAC CATH LAB SUITE	635-CS1-102
Approved Project Director	Control Number VA256-13-C-0277	Building Number F
	PO Number 635-C35336	Location OKLAHOMA CITY VAMC 921 N.E. 13TH STREET, OKLAHOMA CITY, OK 73104
		Date 05-21-2015 / Checked WLM / Drawn MMF
		Drawing Number ET102

Office of Construction and Facilities Management
Department of Veterans Affairs

VA FORM 08-6231

GENERAL ELECTRICAL TELECOMMUNICATIONS NOTES

A. REFER TO E-001 FOR ELECTRICAL LEGEND, GENERAL NOTES, AND ABBREVIATIONS.

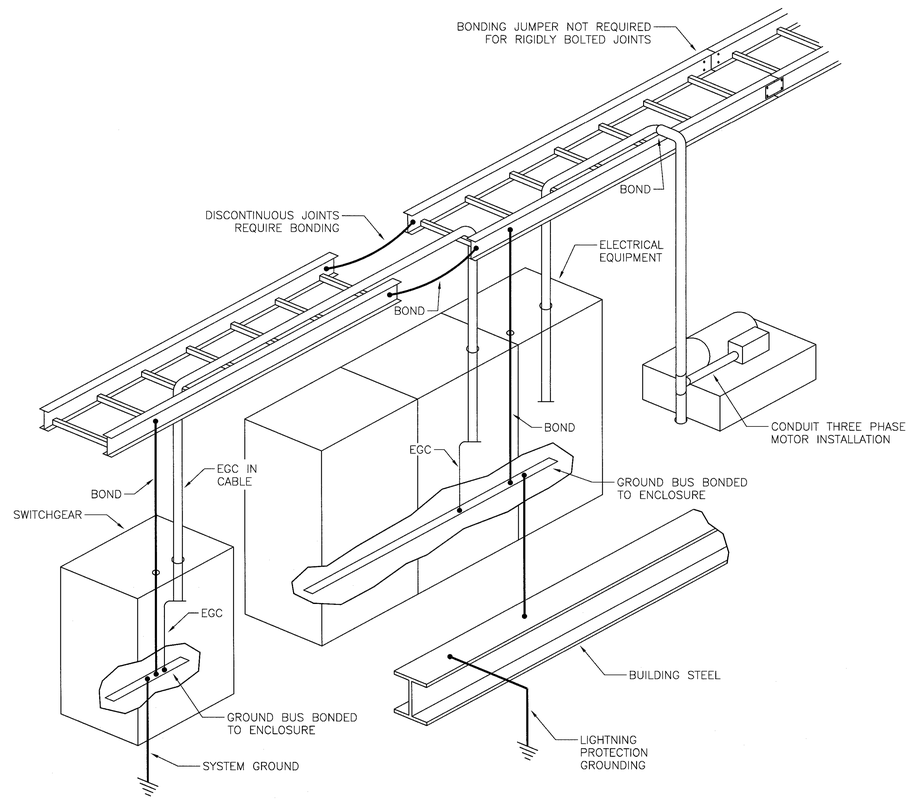

E2 CABLE TRAY GROUNDING DETAIL
NOT TO SCALE

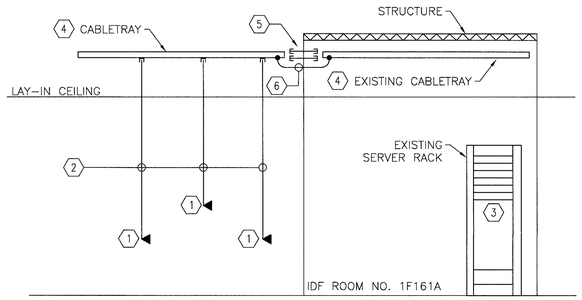

B5 PARTIAL VOICE AND DATA RISER DIAGRAM
NOT TO SCALE

PARTIAL VOICE AND DATA RISER DIAGRAM NOTES

1. DATA OUTLET. SEE SPECIFICATIONS FOR FURTHER INFORMATION.
2. THE ELECTRICAL CONTRACTOR SHALL PROVIDE JUNCTION BOX WITH 1 INCH EMPTY CONDUIT ROUTED UP INTO THE ACCESSIBLE CEILING SPACE WITH BUSH CONDUIT END AND PROVIDE PULL STRINGS WITHIN THE EMPTY CONDUIT SYSTEM. THE TELE / COMMUNICATIONS CONTRACTOR SHALL PULL CATEGORY 6 CABLE FROM EACH DATA OUTLET TO EXISTING SERVER IN ROOM 1F161 AND MAKE FINAL TERMINATION ON THE SERVER EQUIPMENT.
3. SERVER RACK BY OTHERS, IN SEPARATE CONTRACT.
4. PROVIDE GROUNDING SYSTEM FOR CABLE TRAY SYSTEM PER NEC 250.96. SEE DETAIL E2 THIS SHEET.
5. EMPTY CONDUIT SLEEVES.
6. PROVIDE BONDING JUMPER BETWEEN NEW AND EXISTING CABLE TRAY SYSTEMS. SIZE BONDING JUMPER PER NEC 250.96

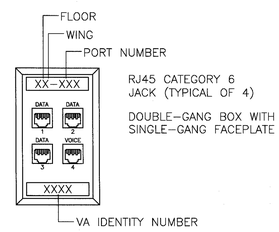

E6 TEL/DATA FACE PLATE DETAIL
NOT TO SCALE

FULLY SPRINKLERED
BID DOCUMENTS
FOR CONSTRUCTION

Revisions:	Date

CONSULTANTS:

ARCHITECT/ENGINEERS:

PARADIGM
ENGINEERS AND CONSTRUCTORS
200 Envoy Circle #201, Louisville KY 40299 – PH: 502.339.8511 – www.paradigmusa.com

STATE OF KENTUCKY
BLAINE CASSEL VAN GANSBEKE
24,738
LICENSED PROFESSIONAL ENGINEER
May 2015

Drawing Title: TELECOMMUNICATIONS DETAILS	Project Title: REMODEL CARDIAC CATH LAB SUITE	Project Number: 635-CS1-102	Office of Construction and Facilities Management
		Building Number: F	
Approved Project Director	Control Number: VA256-13-C-0277	Location: OKLAHOMA CITY VAMC, 921 N.E. 13TH STREET, OKLAHOMA CITY, OK 73104	Drawing Number: ET501
	PO Number: 635-C35336	Date: 05-21-2015 / Checked: WLM / Drawn: MMF	Department of Veterans Affairs

VA FORM 08-6231

GENERAL ELECTRICAL TELECOMMUNICATIONS NOTES

A. REFER TO E-001 FOR ELECTRICAL LEGEND, GENERAL NOTES, AND ABBREVIATIONS.

TELECOMMUNICATIONS MATRIX

T-NUMBER	MOUNTING HEIGHT	ORIGIN ROOM NO.	ORIGIN ROOM NAME	CABLE TYPE	CABLE FURNISHED BY	CONDUIT SIZE *	CONDUIT FURNISHED BY *	ROUTE CABLE WITHIN	TERMINATION ROOM
1F122-A	86"	1F122	CARDIAC CATH LAB 2 (WEST)	CAT6	T.C.C.	1"	E.C.	CABLE TRAY	1F161A
1F122-B	86"	1F122	CARDIAC CATH LAB 2 (WEST)	CAT6	T.C.C.	1"	E.C.	CABLE TRAY	1F161A
1F122-C	CEILING	1F122	CARDIAC CATH LAB 2 (WEST)	CAT6	T.C.C.	1"	E.C.	CABLE TRAY	1F161A
1F122-D	86"	1F122	CARDIAC CATH LAB 2 (WEST)	CAT6	T.C.C.	1"	E.C.	CABLE TRAY	1F161A
1F122A-A	86"	1F122A	CATH LAB STORAGE	CAT6	T.C.C.	1"	E.C.	CABLE TRAY	1F161A
1F122A-B	86"	1F122A	CATH LAB STORAGE	CAT6	T.C.C.	1"	E.C.	CABLE TRAY	1F161A
1F122A-C	86"	1F122A	CATH LAB STORAGE	CAT6	T.C.C.	1"	E.C.	CABLE TRAY	1F161A
1F122A-D	86"	1F122A	CATH LAB STORAGE	CAT6	T.C.C.	1"	E.C.	CABLE TRAY	1F161A
1F122A-E	86"	1F122A	CATH LAB STORAGE	CAT6	T.C.C.	1"	E.C.	CABLE TRAY	1F161A
1F122B-A	18"	1F122B	CONTROL ROOM	CAT6	T.C.C.	1"	E.C.	CABLE TRAY	1F161A
1F122B-B	18"	1F122B	CONTROL ROOM	CAT6	T.C.C.	1"	E.C.	CABLE TRAY	1F161A
1F122B-C	18"	1F122B	CONTROL ROOM	CAT6	T.C.C.	1"	E.C.	CABLE TRAY	1F161A
1F122B-D	18"	1F122B	CONTROL ROOM	CAT6	T.C.C.	1"	E.C.	CABLE TRAY	1F161A
1F122B-E	18"	1F122B	CONTROL ROOM	CAT6	T.C.C.	1"	E.C.	CABLE TRAY	1F161A
1F124-A	86"	1F124	CARDIAC CATH LAB 1 (EAST)	CAT6	T.C.C.	1"	E.C.	CABLE TRAY	1F161A
1F124-B	86"	1F124	CARDIAC CATH LAB 1 (EAST)	CAT6	T.C.C.	1"	E.C.	CABLE TRAY	1F161A
1F124-C	86"	1F124	CARDIAC CATH LAB 1 (EAST)	CAT6	T.C.C.	1"	E.C.	CABLE TRAY	1F161A
1F124-D	86"	1F124	CARDIAC CATH LAB 1 (EAST)	CAT6	T.C.C.	1"	E.C.	CABLE TRAY	1F161A
1F124-E	86"	1F124	CARDIAC CATH LAB 1 (EAST)	CAT6	T.C.C.	1"	E.C.	CABLE TRAY	1F161A
1F124-F	86"	1F124	CARDIAC CATH LAB 1 (EAST)	CAT6	T.C.C.	1"	E.C.	CABLE TRAY	1F161A
1F124A-A	86"	1F124A	CATH LAB STORAGE	CAT6	T.C.C.	1"	E.C.	CABLE TRAY	1F161A
1F124A-B	86"	1F124A	CATH LAB STORAGE	CAT6	T.C.C.	1"	E.C.	CABLE TRAY	1F161A
1F124B-A	18"	1F124B	CONTROL ROOM	CAT6	T.C.C.	1"	E.C.	CABLE TRAY	1F161A
1F124B-B	18"	1F124B	CONTROL ROOM	CAT6	T.C.C.	1"	E.C.	CABLE TRAY	1F161A
1F124B-C	18"	1F124B	CONTROL ROOM	CAT6	T.C.C.	1"	E.C.	CABLE TRAY	1F161A
1F124B-D	18"	1F124B	CONTROL ROOM	CAT6	T.C.C.	1"	E.C.	CABLE TRAY	1F161A
1F124D-A	18"	1F124D	SOILED	CAT6	T.C.C.	1"	E.C.	CABLE TRAY	1F161A
1F123A-A	18"	1F123A	PACS	CAT6	T.C.C.	1"	E.C.	CABLE TRAY	1F161A
1F123A-B	18"	1F123A	PACS	CAT6	T.C.C.	1"	E.C.	CABLE TRAY	1F161A
1F123A-C	18"	1F123A	PACS	CAT6	T.C.C.	1"	E.C.	CABLE TRAY	1F161A
1F123A-D	18"	1F123A	PACS	CAT6	T.C.C.	1"	E.C.	CABLE TRAY	1F161A
1F123A-E	18"	1F123A	PACS	CAT6	T.C.C.	1"	E.C.	CABLE TRAY	1F161A

DEFINITIONS:
T.C.C. = TELE / COMMUNICATIONS CONTRACTOR.
E.C. = ELECTRICAL CONTRACTOR

NOTES:
* PROVIDE PULL STRINGS WITHIN EMPTY CONDUIT.

FULLY SPRINKLERED
BID DOCUMENTS
FOR CONSTRUCTION

Revisions	Date

CONSULTANTS:

ARCHITECT/ENGINEERS:
PARADIGM
ENGINEERS AND CONSTRUCTORS
200 Envoy Circle #201, Louisville KY 40299 – PH: 502.339.8511 – www.paradigmusa.com

STATE OF KENTUCKY
BLAIRE CASSIL VAN GAMBEKE
24,788
LICENSED
PROFESSIONAL ENGINEER

Drawing Title: TELECOMMUNICATIONS MATRIX	Project Title: REMODEL CARDIAC CATH LAB SUITE	Project Number: 635-CS1-102	Office of Construction and Facilities Management
Approved Project Director	Control Number: VA256-13-C-0277	Building Number: F	
	Location: OKLAHOMA CITY VAMC, 921 NE 13TH STREET, OKLAHOMA CITY, OK 73104	Drawing Number: ET601	
	PO Number: 635-C35336	Date: 05-21-2015 / Checked: WLM / Drawn: MMF	Department of Veterans Affairs

VA FORM 08-6231

REFERENCE NOTES

REFER TO SHEER ED101 FOR DEMOLITION WORK ON FIRST FLOOR.

REFER TO SHEET EL101 FOR LIGHTING WORK ON FIRST FLOOR.

REFER TO SHEETS EP101–A, EP101–B, AND EP102 FOR POWER WORK ON FIRST FLOOR.

REFER TO SHEET EP103 FOR POWER WORK AT BASEMENT LEVEL.

REFER TO SHEET EM101 FOR MECHANICAL EQUIPMENT POWER WORK ON FIRST FLOOR.

REFER TO SHEET EM102 FOR MECHANICAL EQUIPMENT POWER WORK ON THIRD FLOOR.

REFER TO SHEETS ET101 AND ET102 FOR TELECOMMUNICATIONS WORK ON FIRST FLOOR.

REFER TO SHEET FA101 FOR FIRE ALARM WORK ON FIRST FLOOR..

NURSE CALL LEGEND

NC — NURSE CALL STATION
'HW' INDICATES PATIENT HEADWALL NURSE CALL FURNISHED WITH HEADWALL

'PS' INDICATES PULL STATION NURSE CALL

'W' INDICATES WALL MOUNTED NURSE CALL

'CB' INDICATES CODE BLUE

NOTE: WIRING SHALL BE IN EMT.

SECURITY LEGEND

W T — CARD ACCESS READER – WALL MOUNTED TOKEN TECHNOLOGY

CAMERA — VIDEO CAMERA

NOTE: WIRING SHALL BE IN EMT.

PUBLIC ADDRESS LEGEND

S SPEAKER — SPEAKER

NOTE: WIRING SHALL BE IN EMT.

GENERAL ELECTRICAL SYSTEMS PLAN NOTES

A. REFER TO E–001 FOR ELECTRICAL LEGEND, GENERAL NOTES, AND ABBREVIATIONS.

B. THE ELECTRICAL CONTRACTOR SHALL PROVIDE JUNCTION BOX AT NURSE CALL DEVICES WITH 3/4 INCH EMPTY CONDUIT ROUTED THROUGHOUT, PROVIDE PULL STRINGS WITHIN THE EMPTY CONDUIT SYSTEM.

B. THE NURSE CALL CONTRACTOR SHALL PULL LOW VOLTAGE WIRE FROM JUNCTION BOX (NURSE CALL DEVICE) THROUGHOUT AND EXTEND TO EXISTING NURSE CALL SYSTEM.

C. THE NURSE CALL CONTRACTOR SHALL PROVIDE FINISH COVER PLATES FOR THE NURSE CALL DEVICES.

D. THE NURSE CALL CONTRACTOR SHALL MAKE ADJUSTMENTS TO THE EXISTING NURSE CALL SYSTEM AS REQUIRED IN ORDER TO ACCOMMODATE NEW NURSE CALL DEVICES.

E. THE ELECTRICAL CONTRACTOR SHALL PROVIDE JUNCTION BOX AT SECURITY DEVICE WITH 3/4 INCH EMPTY CONDUIT ROUTED THROUGHOUT AND PROVIDE PULL STRINGS WITHIN THE EMPTY CONDUIT SYSTEM.

F. THE SECURITY CONTRACTOR SHALL PULL LOW VOLTAGE WIRIE FROM JUNCTION BOX (SECURITY DEVICE) THROUGHOUT AND EXTEND TO EXISTING SECURITY SYSTEM.

G. THE SECURITY CONTRACTOR SHALL PROVIDE FINISH COVER PLATES FOR THE SECURITY DEVICES.

H. THE SECURITY CONTRACTOR SHALL MAKE ADJUSTMENTS TO THE EXISTING SECURITY SYSTEM AS REQUIRED IN ORDER TO ACCOMMODATE NEW SECURITY DEVICES.

I. THE ELECTRICAL CONTRACTOR SHALL PROVIDE JUNCTION BOX AT PUBLIC ADDRESS DEVICES WITH 3/4 INCH EMPTY CONDUIT ROUTED UP INTO THE ACCESSIBLE CEILING SPACE AND THROUGHOUT, PROVIDE PULL STRINGS WITHIN THE EMPTY CONDUIT SYSTEM.

J. THE PUBLIC ADDRESS CONTRACTOR SHALL PULL LOW VOLTAGE WIRE FROM JUNCTION BOX THROUGHOUT AND TO THE EXISTING PUBLIC ADDRESS SYSTEM.

K. THE PUBLIC ADDRESS CONTRACTOR SHALL PROVIDE FINISH COVER PLATES FOR THE PUBLIC ADDRESS DEVICES.

L. THE PUBLIC ADDRESS CONTRACTOR SHALL MAKE ADJUSTMENTS TO THE EXISTING PUBLIC ADDRESS SYSTEM AS REQUIRED IN ORDER TO ACCOMMODATE NEW PUBLIC ADDRESS DEVICES.

ELECTRICAL POWER PLAN NOTES

1. THE PUBLIC ADDRESS CONTRACTOR SHALL PROVIDE (2) STAND ALONE INTERCOM SYSTEMS. EACH SYSTEM SHALL CONSIST OF A PUSH BUTTON INTERCOM SYSTEM AND SPEAKER MOUNTED IN THE CEILING. THE PUSH BUTTON SHALL BE MOUNTED AT 42" AFF. THE PUBLIC ADDRESS CONTRACTOR SHALL PROVIDE ALL WIRING.

2. CONNECT TO EXISTING PUBLIC ADDRESS SYSTEM. REFER TO WIRING DIAGRAM ON SHEET EY501 FOR FURTHER INFORMATION.

3. CONNECT NEW NURSE CALL / CODE BLUE DEVICES TO EXISTING NURSE CALL SYSTEM. REFER TO WIRING DIAGRAM ON SHEET EY501 FOR FURTHER INFORMATION.

4. CONNECT NEW CARD READERS TO THE EXISTING SECURITY SYSTEM. REFER TO WIRING DIAGRAM ON SHEET EY501 FOR FURTHER INFORMATION.

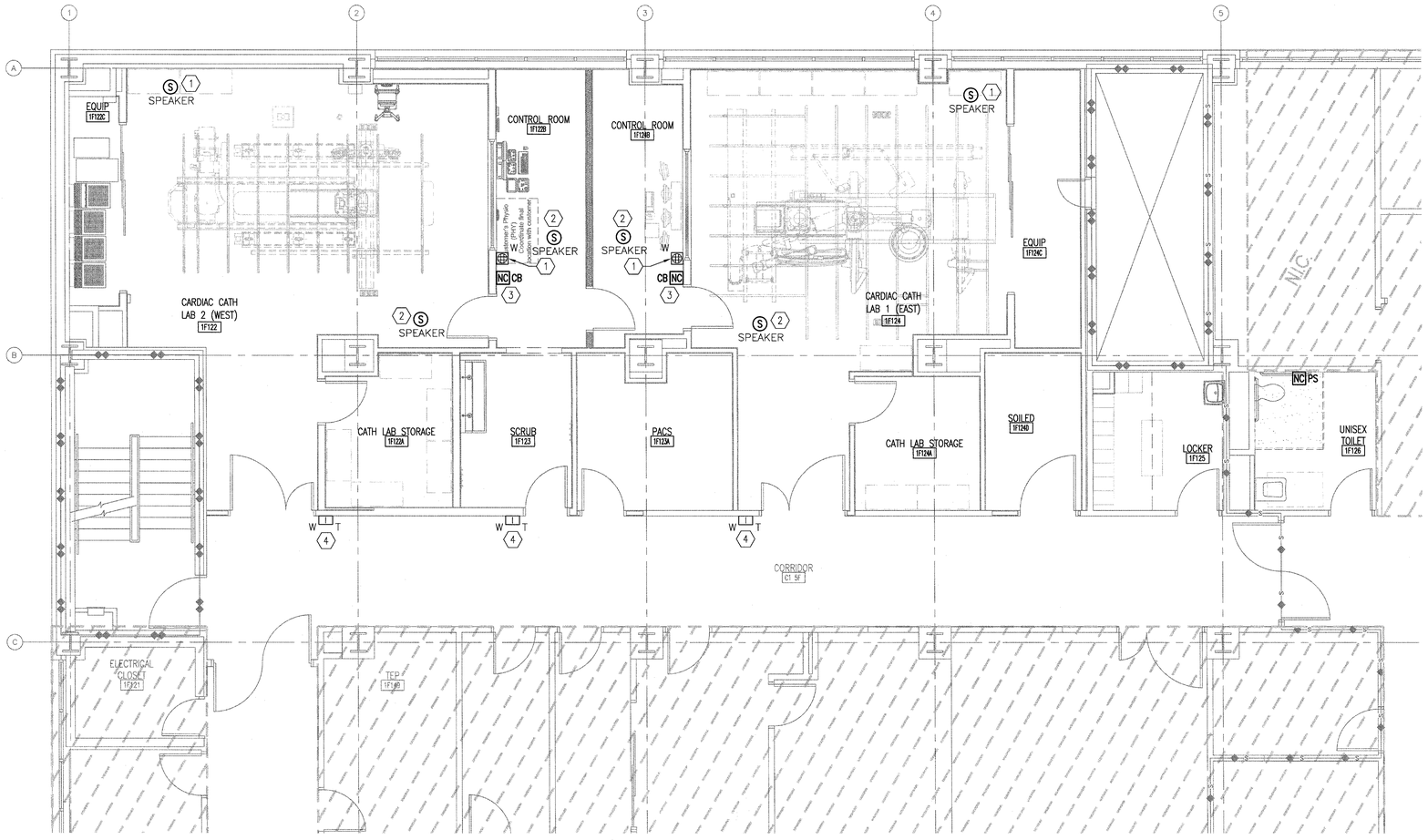

F1 PARTIAL FIRST FLOOR PLAN
SCALE 1/4" = 1'-0"

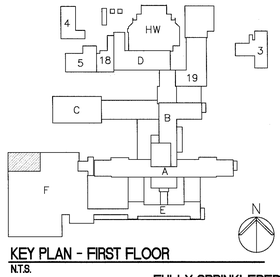

KEY PLAN - FIRST FLOOR
N.T.S.

FULLY SPRINKLERED
BID DOCUMENTS
FOR CONSTRUCTION

Revisions	Date

CONSULTANTS:

ARCHITECT/ENGINEERS:

PARADIGM ENGINEERS AND CONSTRUCTORS
200 Envoy Circle #201, Louisville KY 40299 – PH: 502.339.8511 – www.paradigmusa.com

STATE OF KENTUCKY — BLAIRE CARREL VAN GAMBERKE — 24,739 — LICENSED PROFESSIONAL ENGINEER

Drawing Title: ELECTRICAL SYSTEMS PLAN FIRST FLOOR	Project Title: REMODEL CARDIAC CATH LAB SUITE		Project Number: 635-CS1-102
			Building Number: F
Approved Project Director	Control Number: VA256-13-C-0277	Location: OKLAHOMA CITY VAMC, 921 N.E. 13TH STREET, OKLAHOMA CITY, OK 73104	Drawing Number: EY101
	PO Number: 635-C35336	Date: 05-21-2015 / Checked: WLM / Drawn: MMF	

Office of Construction and Facilities Management
Department of Veterans Affairs

VA FORM 08–6231

GENERAL ELECTRICAL TELECOMMUNICATIONS NOTES

A. REFER TO E-001 FOR ELECTRICAL LEGEND, GENERAL NOTES, AND ABBREVIATIONS.

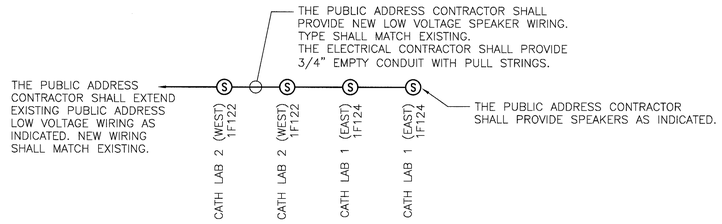

B1 PUBLIC ADDRESS WIRING DIAGRAM
NO SCALE

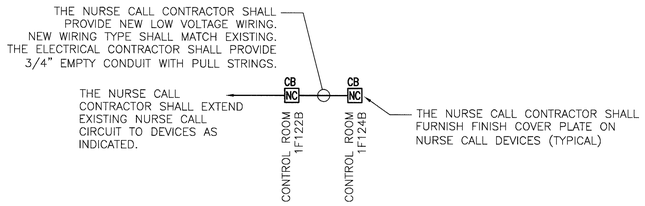

C1 NURSE CALL WIRING DIAGRAM
NO SCALE

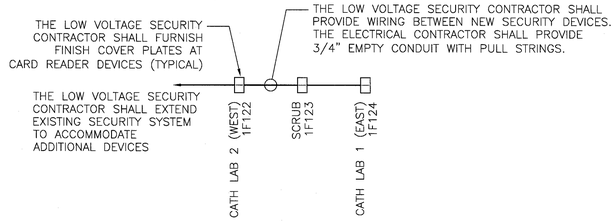

E1 PUBLIC ADDRESS WIRING DIAGRAM
NO SCALE

FULLY SPRINKLERED
BID DOCUMENTS
FOR CONSTRUCTION

Revisions	Date

CONSULTANTS:

ARCHITECT/ENGINEERS:

PARADIGM
ENGINEERS AND CONSTRUCTORS
200 Envoy Circle #201, Louisville KY 40299 – PH: 502.339.8511 – www.paradigmusa.com

STATE OF KENTUCKY
BLAINE CASSEL VAN GANSBEKE
24,738
LICENSED
PROFESSIONAL ENGINEER
Nov. 2015

Drawing Title: ELECTRICAL SYSTEMS DETAILS	Project Title: REMODEL CARDIAC CATH LAB SUITE	Project Number: 635-CS1-102	Office of Construction and Facilities Management
Approved Project Director	Control Number: VA256-13-C-0277	Building Number: F	
	PO Number: 635-C35336	Location: OKLAHOMA CITY VAMC, 921 N.E. 13TH STREET, OKLAHOMA CITY, OK 73104	Drawing Number: EY501
		Date: 05-21-2015 / Checked: WLM / Drawn: MMF	Department of Veterans Affairs

VA FORM 08-6231