GENERAL NOTES

1. SCHEDULE WORK IN EXISTING BUILDINGS WITH THE OWNER. MINIMIZE DISRUPTION OF NORMAL OPERATIONS.
2. REMOVE WIRING DEVICES, FIXTURES, COMPONENTS, ELECTRICAL EQUIPMENT, AND BOXES NOT REQUIRED TO REMAIN IN SERVICE IN REMODELED AREAS WHEN THIS PROJECT IS COMPLETE.
    a. REMOVE WIRE, CONDUITS, AND BOXES FOR SUCH DEVICES BACK TO SOURCE. WHERE A CIRCUIT IS INTERRUPTED BY SUCH REMOVAL OF A DEVICE OR FIXTURE FROM THAT CIRCUIT, INSTALL WIRE AND CONDUIT AS REQUIRED TO RESTORE SERVICE TO THE REMAINING DEVICES AND FIXTURES ON THAT CIRCUIT.
    b. WHERE THIS WORK IS NOT POSSIBLE WITHOUT DISTURBING AREAS NOT BEING RENOVATED, CONSULT WITH THE ARCHITECT BEFORE PERFORMING THE WORK.
    c. LEAVE IN PLACE CONCEALED CONDUIT LOCATED IN PARTITIONS OR HARD CEILING NOT TO BE DEMOLISHED. REMOVE CONDUCTORS FROM SUCH CONDUITS. USE PERMANENT FELT TIP MARKER PENS TO LABEL SUCH CONDUITS AS "ABANDONED" AT EACH END, AND NOTE WHERE IT REEMERGES FROM THE CONCEALED AREA. CAP SUCH CONDUITS.
    d. WHERE ELECTRICAL CIRCUITS, FEEDERS, OR WIRING RUNS THROUGH A SPACE TO BE DEMOLISHED, MAINTAIN THEM. REPAIR ANY DAMAGE CAUSED BY DEMOLITION OR CONSTRUCTION PERFORMED UNDER THIS CONTRACT.
    e. WHERE ELECTRICAL CIRCUITS, FEEDERS, OR WIRING RUNS SERVING OTHER AREAS ARE SERVED FROM THE SPACE TO BE DEMOLISHED, RECONNECT THEM TO OTHER SOURCES AS REQUIRED TO MAINTAIN SERVICE TO THE EXISTING DEVICES.
3. WHERE DRAWINGS INDICATE EXISTING ELECTRICAL EQUIPMENT OR DEVICES TO REMAIN IN SERVICE, BE RELOCATED, OR BE RE-USED, REFURBISH THEM. CLEAN SUCH ITEMS AND NOTIFY ARCHITECT OF ANY DEFECTS IN SUCH INSTALLATIONS. REPAIR ANY EXISTING DAMAGE, AND ANY DAMAGE CAUSED BY DEMOLITION OR CONSTRUCTION PERFORMED UNDER THIS CONTRACT.
4. DO NOT INSTALL ELECTRICAL BOXES IN RATED WALLS CLOSER TO EACH OTHER THAN 2'-0". PROVIDE "PADDY" PADS OR EQUIVALENT ON EACH BOX INSTALLED.
5. SEAL EXISTING PENETRATIONS OF EXISTING WALLS. SEAL PENETRATIONS OF EXISTING WALLS MADE UNDER THIS CONTRACT. SEAL PENETRATIONS OF NEW WALLS BY CONDUITS PROVIDED UNDER THIS CONTRACT. SEAL PENETRATIONS OF NEW WALLS BY EXISTING CONDUITS.
6. VISIT THE SITE BEFORE SUBMITTING A BID TO OBSERVE EXISTING CONDITIONS.
7. SEE ARCHITECTURAL ELEVATIONS FOR EXACT LOCATIONS OF ALL DEVICES.
8. REFER TO MECHANICAL EQUIPMENT ELECTRICAL FEEDER AND PANEL SCHEDULE FOR EQUIPMENT CONNECTION.
9. WIRE COUNTS; FOR EACH 20 AMP 120 VOLT OR 277 VOLT CIRCUIT, PROVIDE 1 #12 PHASE CONDUCTOR, 1 #12 NEUTRAL CONDUCTOR, AND 1 #12 GROUNDING CONDUCTOR.
10. FURNISH ALL LABOR, MATERIALS, EQUIPMENT & SERVICES NECESSARY TO CONSTRUCT AND INSTALL COMPLETE & OPERATIONAL ELECTRICAL SYSTEMS INDICATED ON THE DRAWINGS & IN THE SPECIFICATIONS.
11. CONCEAL ALL CONDUIT UNLESS OTHERWISE SHOWN.
12. PROVIDE SEPARATE RACEWAYS FOR EMERGENCY SYSTEM LIFE SAFETY BRANCH AND CRITICAL BRANCH WIRING PER THE REQUIREMENTS OF CEC 517.30(C). LIFE SAFETY BRANCH AND CRITICAL BRANCH OF THE EMERGENCY SYSTEM SHALL BE KEPT ENTIRELY INDEPENDENT OF ALL OTHER WIRING AND EQUIPMENT AND SHALL NOT ENTER THE SAME RACEWAYS, BOXES OR CABINETS WITH EACH OTHER OR OTHER WIRING, EXCEPT AS PERMITTED BY CEC. PROVIDE PERMANENT SEPARATION BARRIERS PER CEC 314.28(D) OR SEPARATE TERMINAL BOXES PER CEC 300.15 TO SEPARATE WIRING PER CEC 517.30(C).
13. PROVIDE SEPARATE RACEWAYS AND BOXES FOR CONDUCTORS OF 120/208 VOLT SYSTEM AND 277/480 VOLT SYSTEM AND LOW VOLTAGE WIRING SYSTEM, UNLESS OTHERWISE NOTED. EMERGENCY WIRING SHALL BE PROVIDED WITH SEPARATE RACEWAY AND BOX.
14. ALL EQUIPMENT TO BE INSTALLED OR CONNECTED MUST BE LISTED. LABELED OR CERTIFIED FOR ITS USE BY NATIONALLY RECOGNIZED TESTING LABORATORY (NRTL) AS RECOGNIZED BY THE US DEPARTMENT OF LABOR, OCCUPATIONAL SAFETY HEALTH ADMINISTRATION. OWNER FURNISHED EQUIPMENT SHALL BE LISTED, LABELED OR CERTIFIED FOR ITS USE BY A NATIONALLY RECOGNIZED TESTING LABORATORY.
15. EXISTING AND NEW PIPING, DUCTS AND OTHER FOREIGN EQUIPMENT ARE NOT OVER AFFECTED SWITCHBOARD AND PANELBOARDS.
18. CURRENT ELECTRICAL CODE IS CEC 2013: THE 2011 NEC WITH 2010 CALIFORNIA AMENDMENTS, ALSO KNOWN AS THE 2013 CALIFORNIA ELECTRICAL CODE.

LUMINAIRE SCHEDULE

FIXTURE TYPE	MANUFACTURER/CATALOG NUMBER	VOLTS	LAMP TYPE/LUMENS	WATTAGE	BALLAST/DRIVER	NOTES
A	TECH LIGHTING - CORONADO 700WSCORHZ-LED277	277	LED 600LM	16	0-10v	
B	FOCAL POINT FAPL-22-xx-277-DW-4	277	LED	40	0-10v DIM	
C	HUBBARDTON FORGE 139602 16.1" DIA. ADJUSTABLE PENDANT	120	LED MED. BASE	32		1,2
D	HUBBARDTON FORGE 132205 (GLASS SHADE)	120	LED G-9 SOCKET	4 - 10		1,2
D1	HUBBARDTON FORGE 139590	120	LED MED. BASE	32	0-10v	1,2
E	BORDEN LIGHTING 1D-2577-MOD-18	277	LED 1060LM	4 - 10	0-10v DIM	
F	GE ALBEO ALC41T47D4SVW	277		30	0-10v	
F1	PARAMOUNT STARDUSTER C2142S3	277	LED 1200 LM/FT	40	0-10V	
G	LIGHTOLIER P6RD15NZ1OUVB (8CRI 3500K-CL-P)	277	LED 1500LM	16	0-10v DIM	
H	HUBBARDTON FORGE 18870	120	LED CANDELABRA	10		1,2
J	FINELITE HP-4 ID (UPLIGHT) 50-1719/DOWNLIGHT SO 1408 PER 4FT. (16'-0" TOTAL)	277	LED 3500K	144	0-10v DIM	
K	BEGA L6853	277	LED	53	0-10v DIM	
L	LIGHTOLIER 1050LRN 0609D235 DL CDW	277	LED 900LM	16	0-10v DIM	
M	TECH LIGHTING - SOLACE 700BCSLC26WZ	277	CFL	26	ELECTRONIC	
N	FINELITE HPR-1-2X2-RCO LED S0	277	LED 3460LM	37	0-10v DIM	
Q	HUBBARTONFORGE 19463000	120	LED MED BASE	32		1,2
R	HUBBARDTONFORGE 305994 - 20-G-37	120	LED GU24 800LM	12		1,2
S	LIGHTOLIER 1050LRN 0690D2 35 DLCDW	277	LED 900LM	15	0-10V DIM	
T	BEGA 2261	277	LED 291	7	0-10v	
U	LIGHTOLIER P6RD15NZ1OUVB (8CRI 3500K-CL-P) LENSED WALL WASHED	277	LED 1000 LM	10	0-10v DIM	
V	WILA P608569DA6095 CG PENDANT CANOPY/SWIVEL	277	LED 1000 LM	23	0-10v	
W	LUMUX PL3014/46 LED 277 BLACK B1-U1-G0 14 FT. x 7.25" x 7.25" IP65 ETL FOR WET LOCATION	277	LED 1693 LM	46	0-10v	
X1	COOPER INJECTION MOLDED COLOR STABLE HIGH IMBACT VL 94 - 5VA RATES POLYCARBONATE. SINGLE FALE	277	LED	5	0-10v	
X2	COOPER INJECTION MOLDED COLOR STABLE HIGH IMBACT VL 94 - 5VA RATES POLYCARBONATE. DOUBLE FACE	277	LED	5	0-10v	

LUMINAIRE SCHEDULE GENERAL NOTES

A. THIS LUMINAIRE SCHEDULE IS NOT COMPLETE WITHOUT A COPY OF THE CONSTRUCTION DOCUMENTS CONTAINING THE ELECTRICAL SPECIFICATIONS.
B. LUMINAIRES: COMPLY WITH CEC 517.22 REQUIREMENTS.
C. DIMMING CONTROL PROTOCOL (0-10VDC, LINE VOLTAGE, DALI, ETC.) COMPATIBLE WITH LIGHTING CONTROL SYSTEM AS SPECIFIED AND SHOWN ON DRAWINGS.
D. PROVIDE +/- 12 INCH ADJUSTABILITY IN AIRCRAFT CABLE LENGTH WHERE USED
E. COORDINATE ALL CEILING TYPES WITH LUMINAIRE LOCATIONS PRIOR TO ORDERING LUMINAIRES. COORDINATE INSTALLATION WITH REFLECTED CEILING PLAN
F. SPECIFIED MANUFACTURERS ARE APPROVED TO SUBMIT BID. INCLUSION DOES NOT RELIEVE MANUFACTURER FROM SUPPLYING PRODUCT AS DESCRIBED.
G. VERIFY LUMINAIRE VOLTAGE WITH BRANCH CIRCUIT SUPPLYING POWER TO LUMINAIRE PRIOR TO ORDERING.
F. PROVIDE SUBMITTALS THAT INCLUDE THE LUMINAIRE, LAMP AND BALLAST INFORMATION OF EACH LUMINAIRE, WITH APPLICABLE OPTIONS CLEARLY CHECKED OR HIGHLIGHTED. SUBMITTALS NOT INCLUDING THIS INFORMATION WILL BE RETURNED AS REJECTED BY THE ENGINEER OF RECORD.

NOTES:
1. REFER TO ARCHITECTULAR DRAWING FOR EXACT MOUNTING HEIGHT TO DETERMINE EXACT PENDANT/CORD LENGTH REQUIRED.
2. FIXTURE IS ROUTED VIA 277V TO 120V STEP DOWN TRANSFORMER

ELECTRICAL SYMBOL SCHEDULE (SOME SYMBOLS MAY NOT BE USED)

SYMBOLS	WIRING DEVICE SYMBOLS	NOTES
	20A, 125V, DUPLEX RECEPTACLE OUTLET; +18" A.F.F. TO CENTERLINE. (*=PLUG LOAD CONNECTED)	SEE SHEET E4.00
	20A, 125V, DOUBLE DUPLEX RECEPTACLE OUTLET; +18" A.F.F. TO CENTERLINE (*=PLUG LOAD CONNECTED)	SEE SHEET E4.00
	20A, 125V, DOUBLE DUPLEX RECEPTACLE OUTLET; SPECIAL MOUNTING HEIGHT; MOUNT AS NOTED ON PLANS OR SEE SPECIFICATIONS	
	20A,125V, DUPLEX RECEPTACLE; SPECIAL MOUNTING HEIGHT; MOUNT AS NOTED ON PLANS OR SEE SPECIFICATION	
	PLUG STRIP - TYPE , OUTLETS, SPACING AND FINISH AS NOTED	
	20A, 125V, SINGLE RECEPTACLE OUTLET; +18" A.F.F. TO CENTERLINE	
	20A, 125V, SINGLE RECEPTACLE OUTLET; SPECIAL MOUNTING HEIGHT; MOUNT AS NOTED ON PLANS OR SEE SPECIFICATIONS	
IG	20A,125V, DUPLEX RECEPTACLE WITH ISOLATED GROUND; +18" A.F.F. TO CENTERLINE	
WP	20A,125V, DUPLEX RECEPTACLE GFCI WITH WEATHER PROOF COVER; +18" A.F.F. TO CENTERLINE	
	20A, 125V, DUPLEX RECEPTACLE; CEILING MOUNTED	
	20A,125V, DUPLEX RECEPTACLE; GFCI TYPE; +18" A.F.F. TO CENTERLINE	
	20A,125V, DUPLEX RECEPTACLE; GFCI TYPE; SPECIAL MOUNTING HEIGHT; +48"AFF/AFG UON.	
	20A,125V, DOUBLE DUPLEX RECEPTACLE; GFCI TYPE; +18" A.F.F. TO CENTERLINE	
	20A,125V, DOUBLE DUPLEX RECEPTACLE; GFCI TYPE; SPECIAL MOUNTING HEIGHT; MOUNT AS NOTED ON PLANS OR SEE SPECIFICATIONS	
	SPECIAL PURPOSE RECEPTACLE. RATING AS NOTED ON PLANS.	
	DATA/WALL PHONE COMBO — WITH 3/4"C STUB TO CEILING SPACE	
	WALL PHONE — WITH 3/4"C STUB TO CEILING SPACE	
	DATA — WITH 3/4"C STUB TO CEILING SPACE	
S	SINGLE POLE SWITCH	
S S	TWO SINGLE POLE SWITCHES UNDER COMMON FACEPLATE; EACH SWITCH OPERATES ONE BALLAST IN FIXTURES IT CONTROLS	
S_3	THREE WAY SWITCH	
S_D	DIMMER SWITCH	
S_{WP}	SINGLE POLE WEATHERPROOF SWITCH	
S_M	MOMENTARY CONTACT SWITCH	
S_T	MOTOR RATED SWITCH WITH THERMAL OVERLOAD. MOUNT ADJACENT TO MOTOR	
OS	OCCUPANCY LIGHT CONTROL SWITCH; CEILING MOUNTED	
OS	OCCUPANCY LIGHT CONTROL SWITCH; WALL MOUNTED	
OS_D	OCCUPANCY LIGHT CONTROL DIMMER SWITCH; WALL MOUNTED	
PC	PHOTOCELL/DAYLIGHT SENSOR; CEILING MOUNTED	
R	LIGHTING RELAY UL924 DEVICE	
	EXIT SIGN WALL MOUNTED; ARROWS INDICATE DIRECTIONS	
	EXIT SIGN CEILING MOUNTED; ARROWS INDICATE DIRECTIONS	

SYMBOLS	DESIGNATION SYMBOLS	NOTES
A	COLUMN LINE	
150NG	FEEDER DESIGNATION TAG	
1	KEY NOTE TAG	
E14	EQUIPMENT TAG	
A / E1.1	DETAIL REFERENCE BUBBLE DETAIL NUMBER SHEET BEARING DETAIL	
EF 1	MOTOR DESIGNATION TAG	
A 22 a	FIXTURE DESIGNATION UPPER CASE LETTER INDICATES FIXTURE TYPE. LOWER CASE LETTER INDICATES SWITCH LEG NUMBER INDICATES CIRCUIT NUMBER (WHERE SHOWN).	
S_a	LETTER INDICATES FIXTURES CONTROL (WHERE SHOWN)	
22	NUMBER INDICATES CIRCUIT NUMBER (WHERE SHOWN)	
	SPACE FOR CODE REQUIRED CLEARANCE.	

SYMBOLS	CONDUIT SYMBOLS	NOTES
	CONDUIT INSTALLED CONCEALED ABOVE CEILINGS OR IN WALLS IN FINISHED AREAS OR EXPOSED IN UNFINISHED AREAS	
	CONDUIT INSTALLED BELOW FINISHED FLOOR OR BELOW GRADE	
	INDICATES CONDUIT TURNING UP	
	INDICATES CONDUIT TURNING DOWN	
	CONDUIT STUBBED OUT WITH BUSHING	
	CONDUIT STUBBED OUT AND CAPPED	
	FLEXIBLE CONDUIT WITH SINGLE POINT OF CONNECTION AT ELECTRICAL EQUIPMENT	
LV	LOW VOLTAGE WIRING	
G	GROUNDING CONDUCTOR	
	CONDUIT HOMERUN; ROUTE TO PANELBOARD, CABINET, OR TERMINAL BOARD INDICATED, AND TERMINATE CONDUCTORS TO CIRCUIT OVER CURRENT PROTECTIVE DEVICE	
	NEUTRAL CONDUCTOR - NUMBER AS SHOWN ON PLANS HOT CONDUCTOR - NUMBER AS SHOWN ON PLANS	

SYMBOLS	POWER SYMBOLS	NOTES
M	MOTOR OUTLET	
AF	FUSED DISCONNECT SWITCH SWITCH XX/XX/XX = AMP SWITCH/POLES/AMP FUSE — AF=30A FUSED, BF=60A FUSED, CF=100A FUSED, DF=200AFUSED	
	HEAVY DUTY NON-FUSED DISCONNECT SWITCH SWITCH XX/XX = AMP SWITCH/POLES	
	COMBINATION MOTOR STARTER	
S_T	MANUAL MOTOR STARTER WITH THERMAL OVERLOAD	
T1 45KVA	TRANSFORMER DESIGNATION TRANSFORMER RATING TRANSFORMER	
T	TRANSFORMER	
	TRANSFORMER	
	STATIONARY - CIRCUIT BREAKER; RATING AS SHOWN ON PLANS	
J , J	JUNCTION BOX	
J J	JUNCTION BOX WITH KEYNOTE INDICATES THAT THE JUNCTION BOX IS CONNECTED WITH A WHIP FOR A HARDWIRE CONNECTION PER EQUIPMENT REQUIREMENTS INDICATED IN THE KEYNOTE.	
	PUSH BUTTON STATION	
FSD	FIRE SMOKE DAMPER	
	SURFACE MOUNTED PANELBOARD OR TERMINAL CABINET	
	FLUSH MOUNTED PANELBOARD OR TERMINAL CABINET	
M	METER	
GFI	GROUND FAULT INTERUPTOR	
GFM	GROUND FAULT MONITOR	
EPO	EMERGENCY POWER OFF	
VFD	VARIABLE FREQUENCY DRIVE	
ATS	AUTOMATIC TRANSFER SWITCH	
	AUTOMATIC TRANSFER SWITCH	
N E	AUTOMATIC TRANSFER SWITCH WITH BY-PASS ISOLATION SWITCH	
	DRAWOUT CIRCUIT BREAKER; RATING AS SHOWN ON PLANS	
	SWITCH AND FUSE; RATING AS SHOWN ON PLANS	
	SWITCH AND FUSE; RATING AS SHOWN ON PLANS	
	GROUND ROD IN GROUND WELL	

	ABBREVIATIONS	NOTES
A, AMP	AMPERE	
AC	ALTERNATING CURRENT	
AIC	AMPERE INTERRUPTING CAPACITY	
AFF	ABOVE FINISHED FLOOR	
AFG	ABOVE FINISHED GROUND	
AF	FRAME RATING IN AMPERES	
AS	SWITCH RATING IN AMPERES	
AT	TRIP RATING IN AMPERES	
AWG	AMERICAN WIRE GAUGE	
AV	AUDIO VISUAL	
C	CONDUIT	
CL	CENTERLINE	
CEC	CALIFORNIA ELECTRICAL CODE	
CKT	CIRCUIT	
CLG	CEILING	
DC	DIRECT CURRENT	
DIST	DISTRIBUTION	
(E)	EXISTING TO REMAIN	
(ER)	REMOVE EXISTING.	
(EL)	RELOCATE EXISTING.	
EC	EMPTY CONDUIT	
ELEC	ELECTRICAL	
EMER	EMERGENCY	
EMT	ELECTRICAL METALLIC TUBING	
EWH	ELECTRIC WATER HEATER	
FA	FIRE ALARM	
FAAP	FIRE ALARM ANNUNCIATOR PANEL	
FACP	FIRE ALARM CONTROL PANEL	
FATC	FIRE ALARM TERMINAL CABINET	
FARA	FIRE ALARM REMOTE ANNUNCIATOR	
FCIP	FIRE ALARM CONTROL AND INDICATING PANEL	
VCS	FIRE ALARM VOICE COMMUNICATION PANEL	
GFCI	GROUND FAULT CIRCUIT INTERRUPTING	
GFP	GROUND FAULT RELAY	
G, GND	GROUND	
IG	ISOLATED GROUND.	
HP	HORSEPOWER	
LRC	LIGHTING RELAY CABINET	
MECH	MECHANICAL	
MCB	MAIN CIRCUIT BREAKER	
NC	NORMALLY CLOSED	
NEC	NATIONAL ELECTRIC CODE	
NEMA	NATIONAL ELECTRICAL MANUFACTURER'S ASSOCIATION	
NO	NORMALLY OPEN	
NTS	NOT TO SCALE	
OFCI	OWNER FURNISHED CONTRACTOR INSTALLED	
PB	PULL BOX	
Ø, PH	PHASE	
PNL	PANEL	
PWR	POWER	
RSC	RIGID STEEL CONDUIT	
SWBD	SWITCHBOARD	
SYS	SYSTEM	
TEL	TELEPHONE	
TYP	TYPICAL	
UON	UNLESS OTHERWISE NOTED	
V	VOLT	
VA	VOLT AMPERES	
W	WATT	
XFMR	TRANSFORMER	

DRAWING INDEX

SHEET SCHEDULE

SHEET NO.	DESCRIPTION	SCALE
ES001	LEGEND, ABBREVIATIONS, GENERAL NOTES, SHEET INDEX	NONE
ES100	ELECTRICAL SITE PLAN - BASE SCHEME	1/32" = 1'-0"
EP101	POWER PLAN - NORTH WING	1/8" = 1'-0"
EP102	POWER PLAN - WEST WING	1/8" = 1'-0"
EP103	POWER ROOF PLAN - NORTH WING	1/8" = 1'-0"
EP104	POWER ROOF PLAN - WEST WING	1/8" = 1'-0"
EP105	ENGLARGED ELECTRICAL ROOM POWER PLAN	1/4" = 1'-0"
EP106	DEDUCTIVE ALTERNATE PLANS - POWER	1/8" = 1'-0"
EL201	LIGHTING PLAN - NORTH WING	1/8" = 1'-0"
EL202	LIGHTING PLAN - WEST WING	1/8" = 1'-0"
EL203	DEDUCTIVE ALTERNATE PLANS - LIGHTING	1/8" = 1'-0"
ES500	SINGLE-LINE DIAGRAM, SCHEDULES - BASE SCHEME	NONE
ES501	PANEL SCHEDULES AND SINGLE-LINE DIAGRAM	NONE
ES502	ELECTRICAL DETAILS	NONE
ES503	ELECTRICAL DETAILS	NONE

100% CONSTRUCTION DOCUMENTS
NOVEMBER 19, 2015

Revisions: | Date

CONSULTANTS:

MAZZETTI
220 Montgomery Street, Suite 650
San Francisco, CA 94104
TEL: 415.362.3266
www.mazzetti.com
Project Number: 120-099

REGISTERED PROFESSIONAL ENGINEER
WALTER N. VERNON
No. E013790
EXP. 12/31/2015
ELECTRICAL
STATE OF CALIFORNIA

ARCHITECT/ENGINEERS:

POLYTECH ASSOCIATES INC
POLYTECH ASSOCIATES INC.
235 Pine Street, 17th Floor
San Francisco, CA 94104
TEL (415) 397-3117
FAX (415) 397-1517

Drawing Title: LEGEND, ABBREVIATIONS, GENERAL NOTES & SHEET INDEX

Approved: Project Director

Project Title: EXPAND COMMUNITY LIVING CENTER PHASE 1

Location: 2615 E. CLINTON AVE. FRESNO, CA 93703-2223

Date: OCTOBER 29, 2015 | Checked: MT | Drawn: NS/GL

Project Number: 570-218

Building Number: 31

Drawing Number: ES001

Dwg. of

Office of Construction and Facilities Management

Department of Veterans Affairs

VA FORM 08-6231

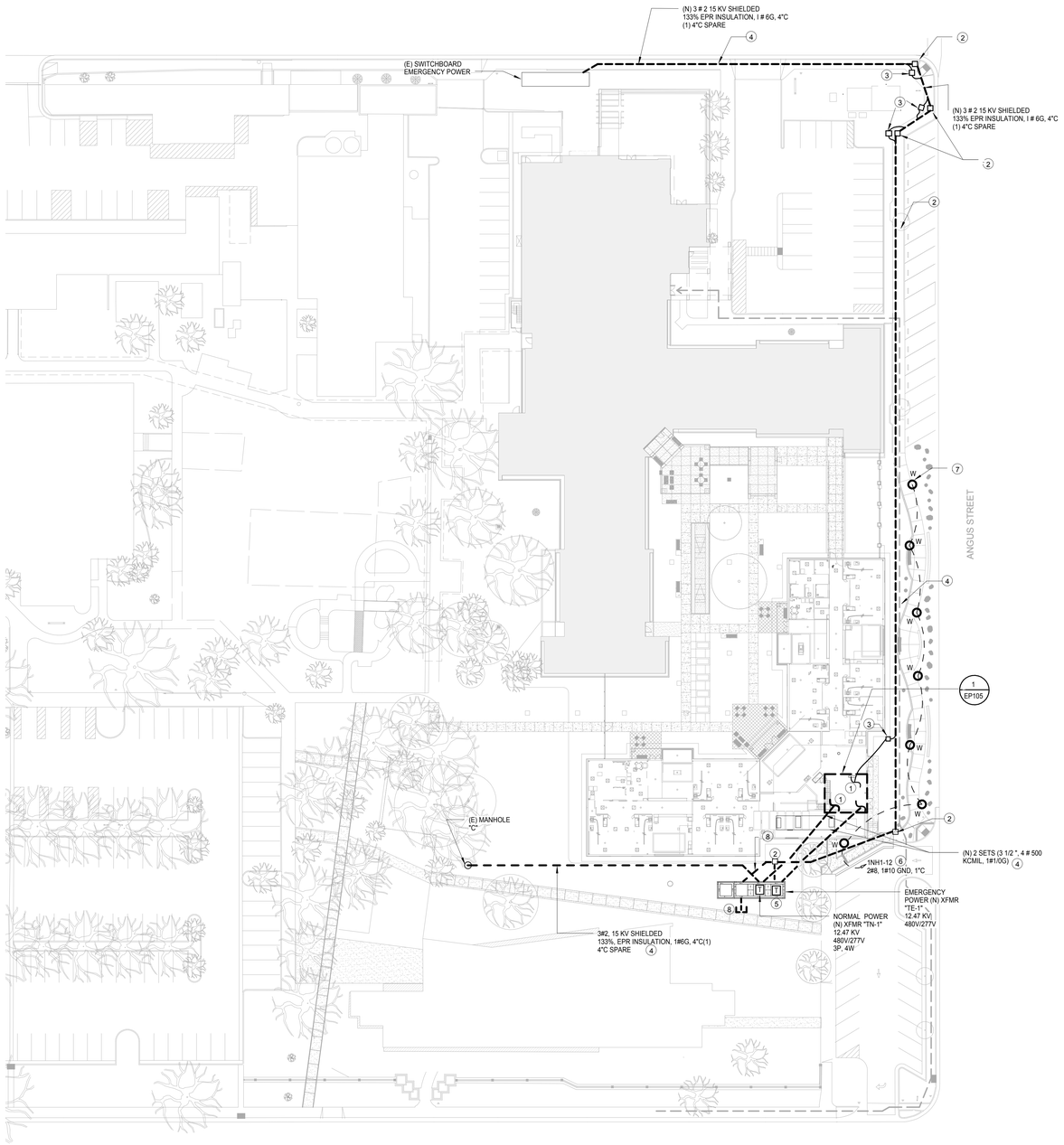

1 ELECTRICAL SITE PLAN - BASE SCHEME
1/32" = 1'-0"

N

GENERAL SHEET NOTES

A. STRICTLY ADHERE TO VA 12KV ELECTRICAL SYSTEM SHUTDOWN.

B. REFER TO SHEET ES500 FOR ADDITIONAL INFORMATION THAT PERTAIN TO EXISTING MAIN SWITCHGEAR CIRCUIT #S6.

C. REFER TO ARCHITECTURAL, LANDSCAPE, CIVIL AND STRUCTURAL DRAWINGS FOR LOCATIONS OF TRANSFORMER PAD, MANHOLES AND EXTERIOR POLE MOUNTED LUMINAIRE. REFER TO THE STRUCTURAL DRAWING FOR TRANSFORMER PAD DETAILS.

KEY NOTES

1. EMERGENCY POWER AND NORMALPOWER TERMINATES INTO ATS IN THE CLC MAIN ELECTRICAL ROOM.
2. 6'-4"Wx9'-4"Lx8'-0"D PULLBOX LOCKABLE FOR 15kV EMERGENCY FEEDER.
3. 3'Wx3'Lx3'D PULLBOX LOCKABLE FOR ATS SIGNAL.
4. SEE SHEET ES500 FOR DUCT BANK DETAIL.
5. SEE SHEET ES500 SHEET NOTES #1.
6. ROUTE HOMERUN VIA LCP.
7. REFER TO SHEET ES503 DETAIL #5. INSTALL SUCH THAT ONE GLASS SIDE OF THE LUMINAIRE SHALL BE ORIENTED TOWARDS THE PATH WALK. LIGHT FALLS DIRECTLY OUT OF THE GLASS AREA ON TO THE GROUND.
8. SPARE 2"-4"C CONCRETE ENCASED.

KEY PLAN

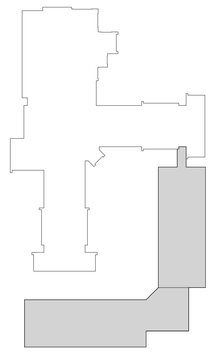

100% CONSTRUCTION DOCUMENTS
NOVEMBER 19, 2015

Revisions:	Date

CONSULTANTS:

MAZZETTI
220 Montgomery Street, Suite 650
San Francisco, CA 94104
TEL: 415.632.3266
www.mazzetti.com

PROJECT NUMBER: 120-099

ARCHITECT/ENGINEERS:

POLYTECH ASSOCIATES INC.

235 Pine Street, 17th Floor
San Francisco, CA 94104
TEL (415) 397-3117
FAX (415) 397-1517

Drawing Title	ELECTRICAL SITE PLAN - BASE SCHEME
Approved: Project Director	
Project Title	EXPAND COMMUNITY LIVING CENTER PHASE 1
Location	2615 E. CLINTON AVE. FRESNO, CA 93703-2223
Date	OCTOBER 29, 2015
Checked	MT
Drawn	NS/GL
Project Number	570-218
Building Number	31
Drawing Number	ES100
Dwg. of	

Office of Construction and Facilities Management

Department of Veterans Affairs

VA FORM 08-6231

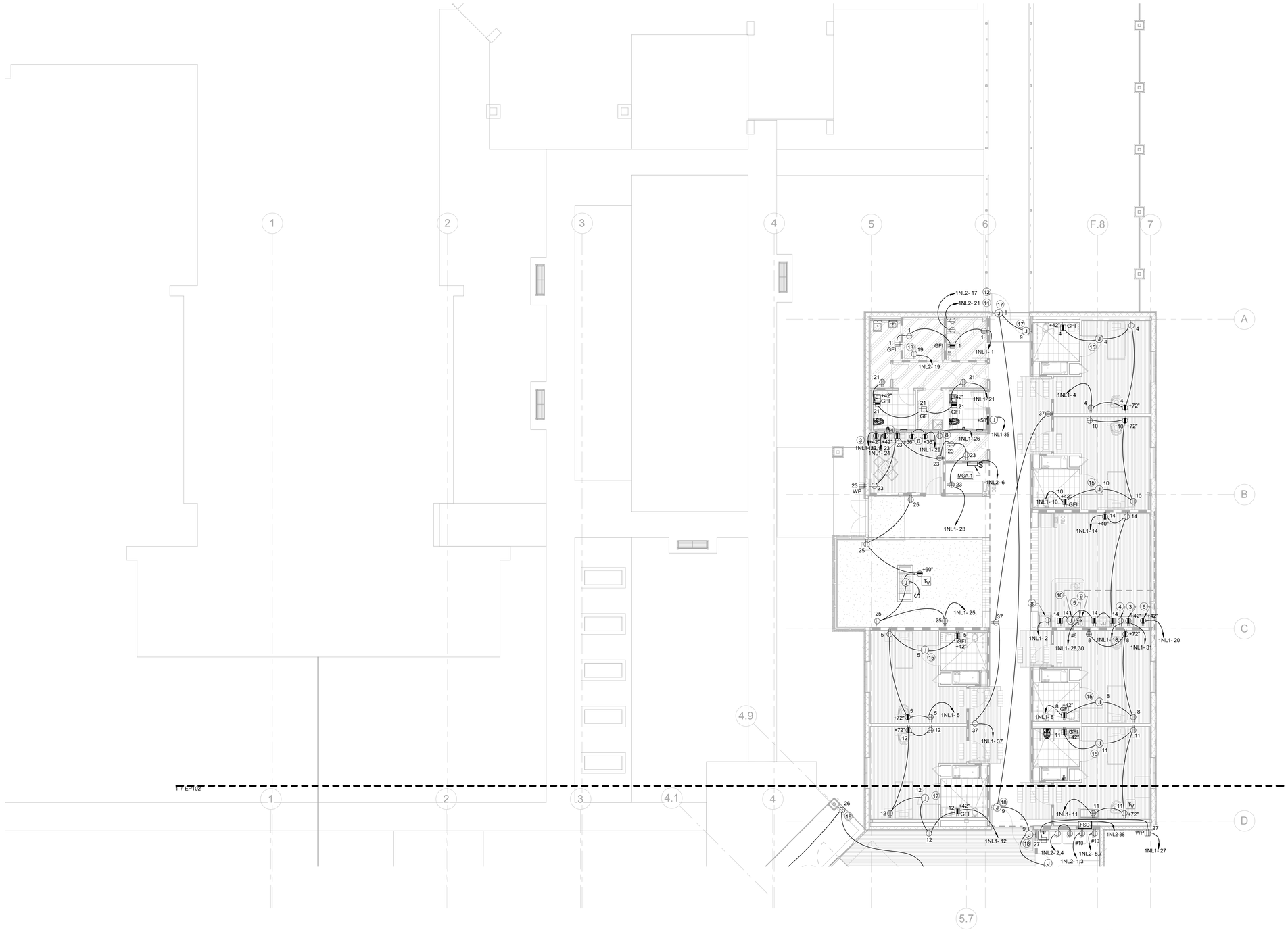

1 POWER PLAN - NORTH WING
1/8" = 1'-0"

GENERAL SHEET NOTES

A. REFER TO THE ARCHITECTURAL DRAWINGS FOR EXACT EQUIPMENT AND DEVICE LOCATION.

B. SPEC. SECTION 262726 3.1 M SHALL READ: PROVIDE ENGRAVED FACEPLATE WITH PANEL AND CIRCUIT NUMBER.

KEY NOTES

1. FOR FURNITURE SYSTEM, 120V.
2. FOR COFFEE MAKER; 120V, 15A, 1-PH.
3. FOR MICROWAVE; 120V 13.4A, 1-PH.
4. FOR DISHWASHER, 120V.
5. FOR RANGE, 120V.
6. FOR REFRIGERATOR, 120V.
7. PROVIDE 120V POWER FOR AUTO DOOR.
8. ICE MAKER; 115V,18.3A, 1-PH.
9. OVEN; 208V, 2.7A, 1-PH.
10. RANGE HOOD.
11. PYXIS 120V.
12. OMNI CELL 120V.
13. BLANKET WARMER 120V.
14. TOASTER.
15. LIFT CEILING SYSTEM 120V.
16. 120V POWER FOR AUTO DOOR.
17. JUNCTION BOX FOR DOOR MAGNET HOLDER SEE FIRE ALARM DWG.

KEY PLAN

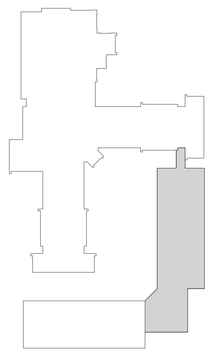

100% CONSTRUCTION DOCUMENTS
NOVEMBER 19, 2015

Revisions:	Date

CONSULTANTS:

MAZZETTI
220 Montgomery Street, Suite 650
San Francisco, CA 94104
TEL: 415.632.3266
www.mazzetti.com

PROJECT NUMBER: 120-099

ARCHITECT/ENGINEERS:

POLYTECH ASSOCIATES INC.

235 Pine Street, 17th Floor
San Francisco, CA 94104
TEL (415) 397-3117
FAX (415) 397-1517

Drawing Title: POWER PLAN - NORTH WING	Project Title: EXPAND COMMUNITY LIVING CENTER PHASE 1		Project Number: 570-218
Approved: Project Director	Location: 2615 E. CLINTON AVE. FRESNO, CA 93703-2223		Building Number: 31
	Date: OCTOBER 29, 2015	Checked: MT / Drawn: NS/GL	Drawing Number: EP101 Dwg. of

Office of Construction and Facilities Management

Department of Veterans Affairs

VA FORM 08-6231

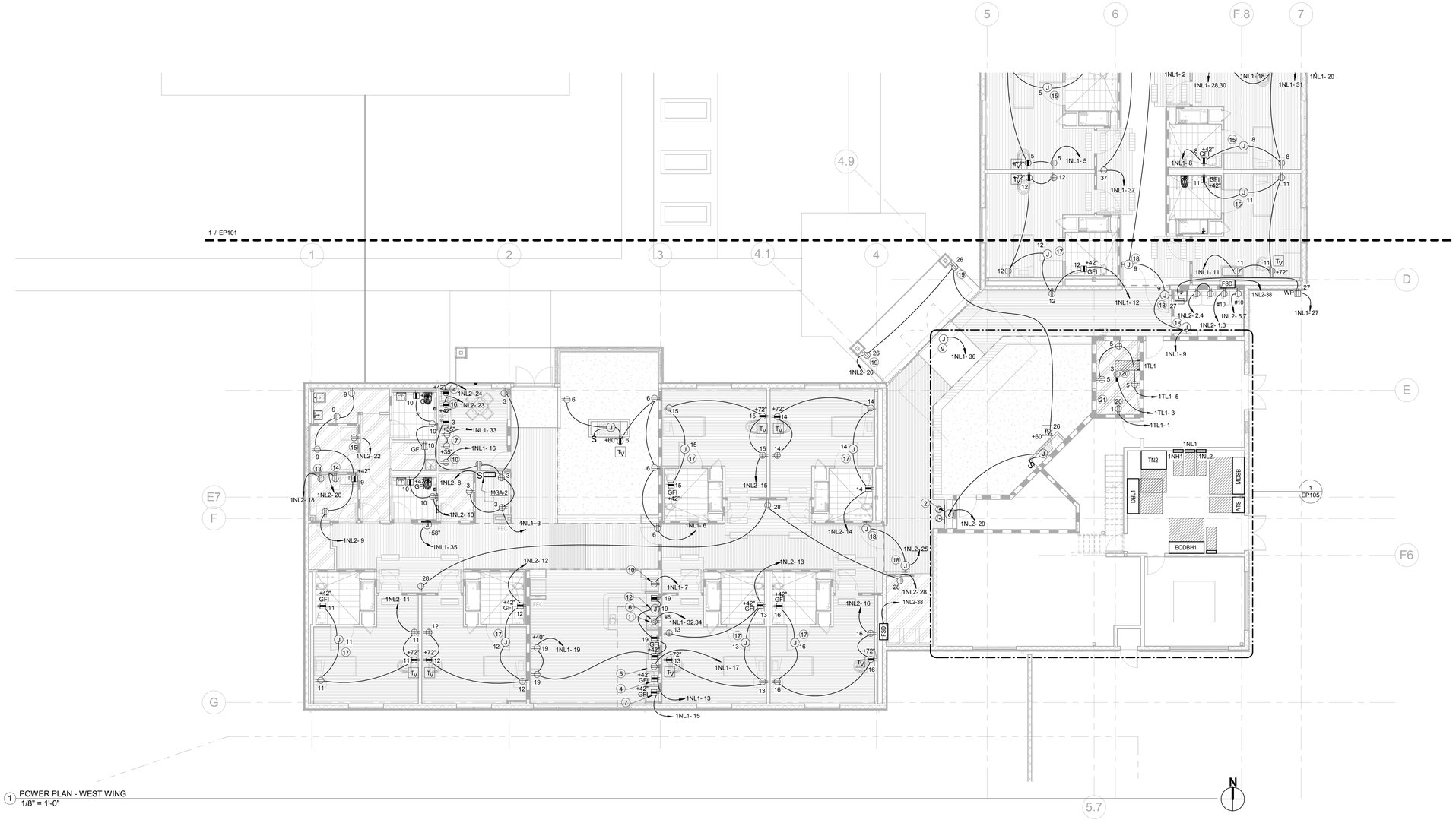

1 POWER PLAN - WEST WING
1/8" = 1'-0"

GENERAL SHEET NOTES

A. REFER TO THE ARCHITECTURAL DRAWINGS FOR EXACT EQUIPMENT AND DEVICE LOCATION.

B. SPEC. SECTION 262726 3.1 M SHALL READ: PROVIDE ENGRAVED FACEPLATE WITH PANEL AND CIRCUIT NUMBER.

C. DEDUCTIVE ALTERNATE: AT GRIDLINES 1-4 AND GRIDLINES G-E, PROVIDE 2 CONVENIENCE OUTLET; MOUNT (1) OUTLET ADJACENT EACH DOOR LOCATION. OUTLETS SHALL BE CIRCUITED WITH 2#12, 3/4"C TO PANEL 1NL2.

KEY NOTES

1. FOR FURNITURE SYSTEM, 120V.
2. FOR ELECTRIC WATER COOLER 120V. COORDINATE REQUIREMENTS AND CONNECTION LOCATION WITH PLUMBING.
3. FOR COFFEE MAKER, 120V.
4. FOR MICROWAVE, 120V.
5. FOR DISHWASHER, 120V.
6. FOR RANGE, 120V.
7. FOR REFRIGERATOR, 120V.
8. FOR WASHER/DRYER COMBO, 208V-1PH.
9. 120V POWER FOR AUTO DOOR.
10. ICE MAKER; 120V, 18.3A, 1-PH
11. OVEN; 208V, 2.7A, 1-PH.
12. RANGE HOOD; 120V
13. PYXIS 120V.
14. OMNI CELL 120V.
15. BLANKET WARMER 120V.
16. TOASTER.
17. LIFT CEILING SYSTEM 120V.
18. JUNCTION BOX FOR DOOR MAGNETIC HOLDER SEE FIRE ALARM DWG.
19. FOR HOLIDAY LIGHTS.
20. LS-20R MOUNTED AT TOP OF THE I.T. RACK
21. PROVIDE 3/4" THICK 8'-0" H PLYWOOD. WRAP AROUND THE I.T. ROOM.

KEY PLAN

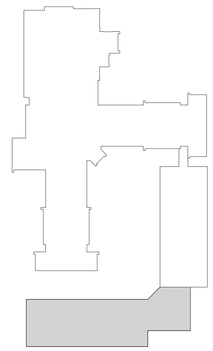

100% CONSTRUCTION DOCUMENTS
NOVEMBER 19, 2015

Revisions:	Date

CONSULTANTS:

MAZZETTI
220 Montgomery Street, Suite 650
San Francisco, CA 94104
TEL: 415.632.3266
www.mazzetti.com

PROJECT NUMBER: 120-099

ARCHITECT/ENGINEERS:

POLYTECH ASSOCIATES INC.
235 Pine Street, 17th Floor
San Francisco, CA 94104
TEL (415) 397-3117
FAX (415) 397-1517

Drawing Title	POWER PLAN - WEST WING
Approved: Project Director	
Project Title	EXPAND COMMUNITY LIVING CENTER PHASE 1
Location	2615 E. CLINTON AVE. FRESNO, CA 93703-2223
Date	OCTOBER 29, 2015
Checked	MT
Drawn	NS/GL
Project Number	570-218
Building Number	31
Drawing Number	EP102
Dwg. of	

Office of Construction and Facilities Management

Department of Veterans Affairs

VA FORM 08-6231

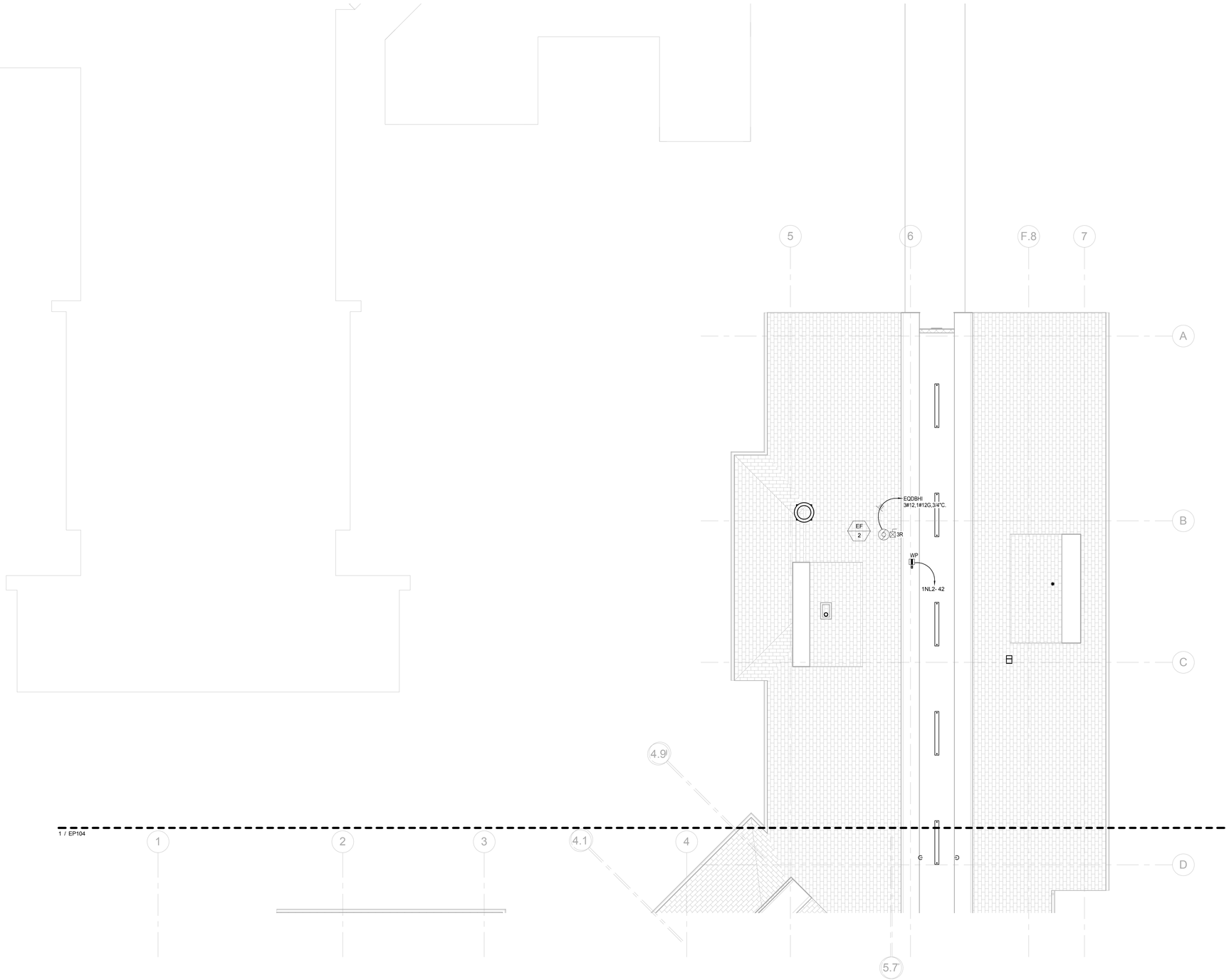

1 POWER ROOF PLAN - NORTH WING
1/8" = 1'-0"

N

100% CONSTRUCTION DOCUMENTS
NOVEMBER 19, 2015

GENERAL SHEET NOTES

A. REFER TO MECHANICAL AND ARCHITECTURAL DRAWINGS FOR EXACT EQUIPMENT LOCATION.

B. SPEC. SECTION 262726 3.1 M SHALL READ: PROVIDE ENGRAVED FACEPLATE WITH PANEL AND CIRCUIT NUMBER.

KEY NOTES

KEY PLAN

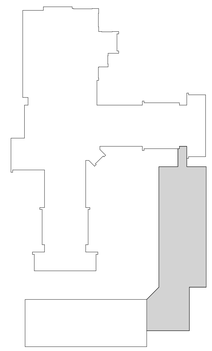

Revisions:	Date

CONSULTANTS:

MAZZETTI
220 Montgomery Street, Suite 650
San Francisco, CA 94104
TEL 415.632.3266
www.mazzetti.com

PROJECT NUMBER: 120-099

ARCHITECT/ENGINEERS:

POLYTECH ASSOCIATES INC.

235 Pine Street, 17th Floor
San Francisco, CA 94104
TEL (415) 397-3117
FAX (415) 397-1517

Drawing Title: POWER ROOF PLAN - NORTH WING

Approved: Project Director

Project Title: EXPAND COMMUNITY LIVING CENTER PHASE 1

Location: 2615 E. CLINTON AVE. FRESNO, CA 93703-2223

Date: OCTOBER 29, 2015 | Checked: MT | Drawn: NS/GL

Project Number: 570-218

Building Number: 31

Drawing Number: EP103

Dwg. of

Office of Construction and Facilities Management

Department of Veterans Affairs

VA FORM 08-6231

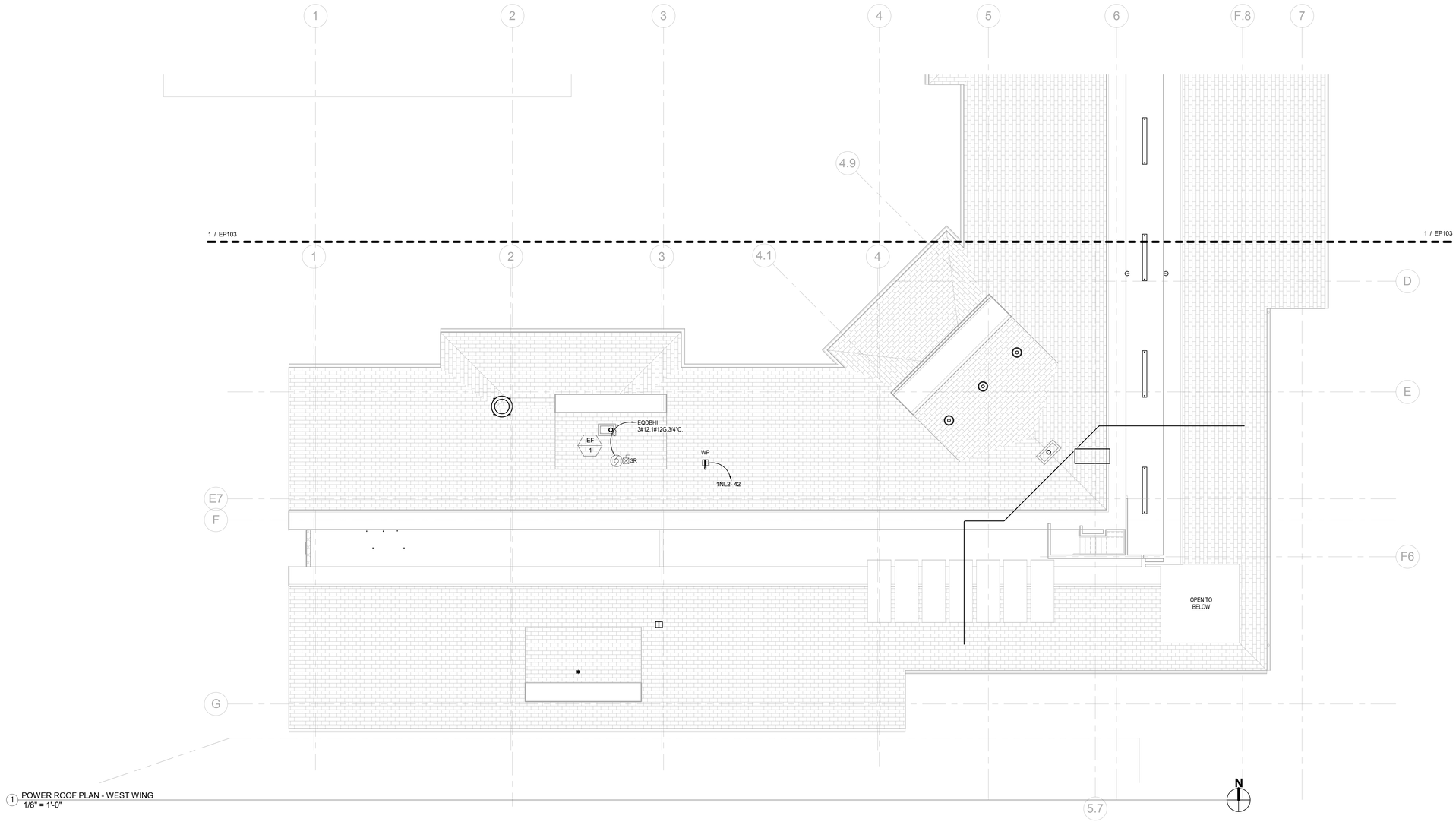

1 POWER ROOF PLAN - WEST WING
1/8" = 1'-0"

GENERAL SHEET NOTES

A. REFER TO MECHANICAL AND ARCHITECTURAL DRAWINGS FOR EXACT EQUIPMENT LOCATION.

B. SPEC. SECTION 262726 3.1 M SHALL READ: PROVIDE ENGRAVED FACEPLATE WITH PANEL AND CIRCUIT NUMBER.

KEY NOTES

KEY PLAN

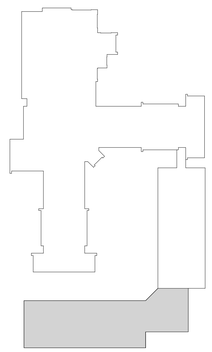

100% CONSTRUCTION DOCUMENTS
NOVEMBER 19, 2015

Revisions:	Date

CONSULTANTS:

MAZZETTI
220 Montgomery Street, Suite 650
San Francisco, CA 94104
TEL: 415.632.3266
www.mazzetti.com

PROJECT NUMBER: 120-099

ARCHITECT/ENGINEERS:

POLYTECH ASSOCIATES INC.

235 Pine Street, 17th Floor
San Francisco, CA 94104
TEL (415) 397-3117
FAX (415) 397-1517

Drawing Title: POWER ROOF PLAN - WEST WING

Approved: Project Director

Project Title: EXPAND COMMUNITY LIVING CENTER PHASE 1

Location: 2615 E. CLINTON AVE. FRESNO, CA 93703-2223

Date: OCTOBER 29, 2015 | Checked: MT | Drawn: NS/GL

Project Number: 570-218

Building Number: 31

Drawing Number: EP104

Dwg. of

Office of Construction and Facilities Management

Department of Veterans Affairs

VA FORM 08-6231

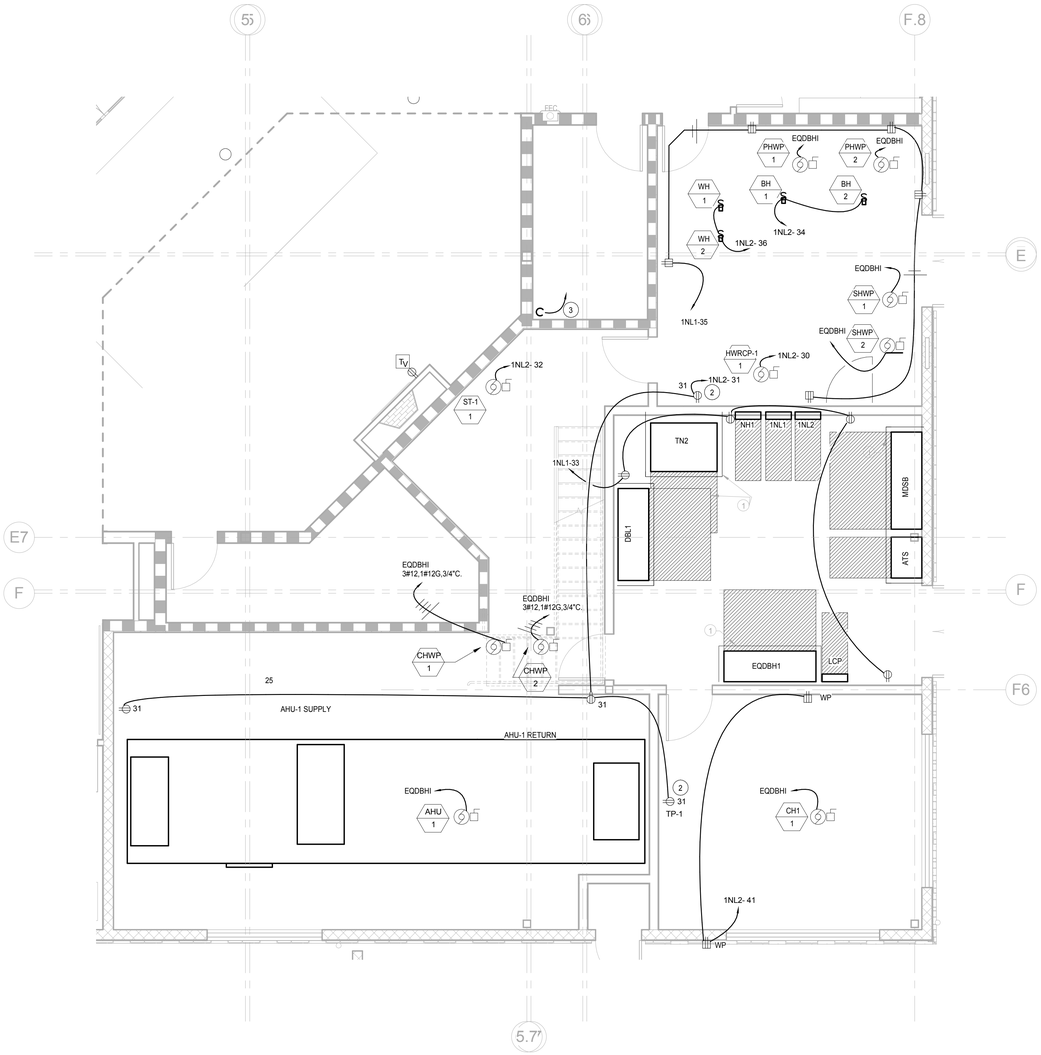

1 ENLARGED MECHANICAL ROOM POWER PLAN
1/4" = 1'-0"

GENERAL SHEET NOTES

A. REFER TO MECHANICAL AND PLUMBING DRAWINGS FOR EXACT EQUIPMENT LOCATION

B. SPEC. SECTION 262726 3.1 M SHALL READ: PROVIDE ENGRAVED FACEPLATE WITH PANEL AND CIRCUIT NUMBER.

KEY NOTES

1. 4" HOUSE KEEPING CONCRETE PAD I.E. 4" FROM EACH SIDE OF THE EQUIPMENT TO THE EDGE OF THE PAD.
2. TAP PRIMER 120V.
2. 2"C ROUTED UP TO ROOF.

KEY PLAN

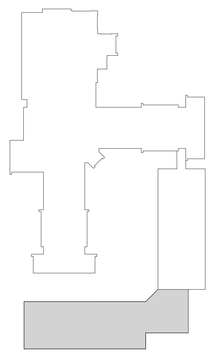

100% CONSTRUCTION DOCUMENTS
NOVEMBER 19, 2015

Revisions:	Date

CONSULTANTS:

MAZZETTI
220 Montgomery Street, Suite 650
San Francisco, CA 94104
TEL: 415.632.3266
www.mazzetti.com

PROJECT NUMBER: 120-099

ARCHITECT/ENGINEERS:

POLYTECH ASSOCIATES INC.

235 Pine Street, 17th Floor
San Francisco, CA 94104
TEL (415) 397-3117
FAX (415) 397-1517

Drawing Title	ENGLARGED ELECTRICAL ROOM POWER PLAN
Approved: Project Director	
Project Title	EXPAND COMMUNITY LIVING CENTER PHASE 1
Location	2615 E. CLINTON AVE. FRESNO, CA 93703-2223
Date	OCTOBER 29, 2015
Checked	MT
Drawn	NS/GL
Project Number	570-218
Building Number	31
Drawing Number	EP105
Dwg. of	

Office of Construction and Facilities Management

Department of Veterans Affairs

VA FORM 08-6231

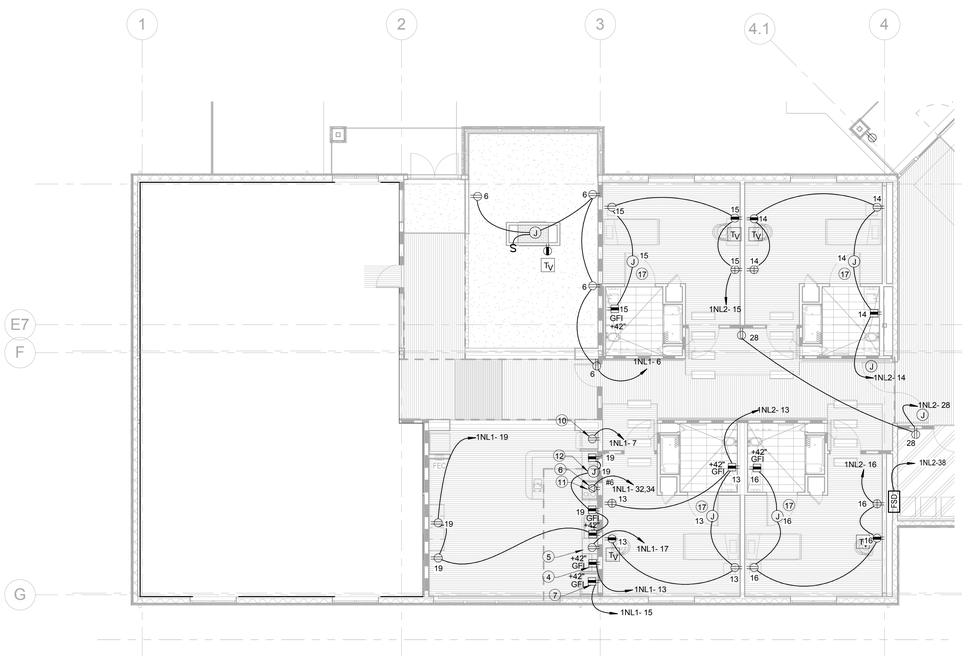

DEDUCT ALT #2 - WEST WING
UNASSIGNED SPACE POWER PLAN
2 1/8" = 1'-0"

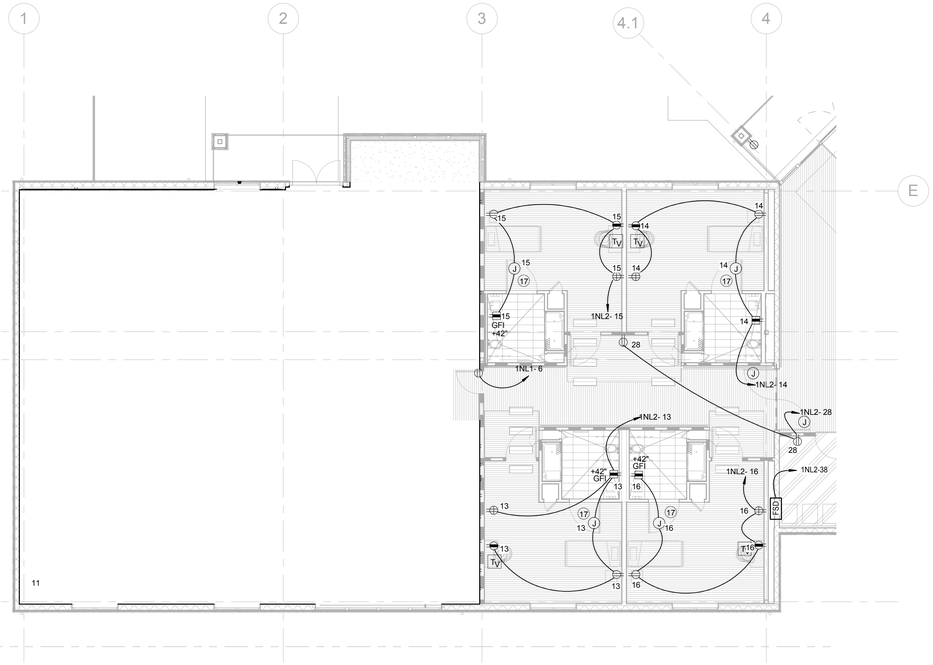

DEDUCT ALT #2, #5 - WEST WING
UNASSIGNED SPACE POWER PLAN
1 1/8" = 1'-0"

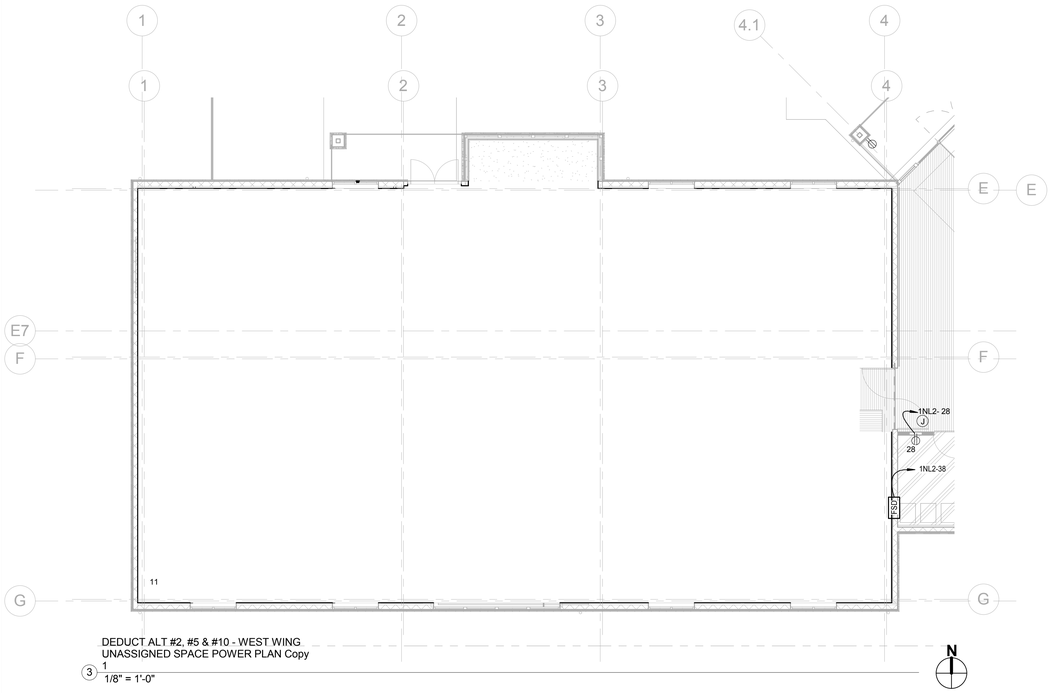

DEDUCT ALT #2, #5 & #10 - WEST WING
UNASSIGNED SPACE POWER PLAN Copy 1
3 1/8" = 1'-0"

GENERAL SHEET NOTES

A. DEDUCTIVE ALTERNATE: AT GRIDLINES 1-4 AND GRIDLINES G-E, PROVIDE 2 CONVENIENCE OUTLET; MOUNT (1) OUTLET ADJACENT EACH DOOR LOCATION. OUTLETS SHALL BE CIRCUITED WITH 2#12, 3/4"C TO PANEL 1NL2.

B. REFER TO THE ARCHITECTURAL DRAWINGS FOR EXACT EQUIPMENT AND DEVICE LOCATION.

C. SPEC. SECTION 262726 3.1 M SHALL READ: PROVIDE ENGRAVED FACEPLATE WITH PANEL AND CIRCUIT NUMBER.

KEY NOTES

1. FOR FURNITURE SYSTEM, 120V.
2. FOR ELECTRIC WATER COOLER 120V. COORDINATE REQUIREMENTS AND CONNECTION LOCATION WITH PLUMBING.
3. FOR COFFEE MAKER, 120V.
4. FOR MICROWAVE, 120V.
5. FOR DISHWASHER, 120V.
6. FOR RANGE, 120V.
7. FOR REFRIGERATOR, 120V.
8. FOR WASHER/DRYER COMBO, 208V-1PH.
9. 120V POWER FOR AUTO DOOR.
10. ICE MAKER; 120V, 18.3A, 1-PH
11. OVEN; 208V, 2.7A, 1-PH.
12. RANGE HOOD; 120V
13. PYXIS 120V.
14. OMNI CELL 120V.
15. BLANKET WARMER 120V.
16. TOASTER.
17. LIFT CEILING SYSTEM 120V.
18. JUNCTION BOX FOR DOOR MAGNETIC HOLDER SEE FIRE ALARM DWG.
19. FOR HOLIDAY LIGHTS.

100% CONSTRUCTION DOCUMENTS
NOVEMBER 19, 2015

Revisions:	Date

CONSULTANTS:

MAZZETTI
220 Montgomery Street, Suite 650
San Francisco, CA 94104
TEL: 415.632.3266
www.mazzetti.com

PROJECT NUMBER: 120-099

REGISTERED PROFESSIONAL ENGINEER
WALTER W. FUNG
No. E013790
EXP. 12/31/2015
ELECTRICAL
STATE OF CALIFORNIA

ARCHITECT/ENGINEERS:

POLYTECH ASSOCIATES INC

POLYTECH ASSOCIATES INC.
235 Pine Street, 17th Floor
San Francisco, CA 94104
TEL (415) 397-3117
FAX (415) 397-1517

Drawing Title	DEDUCTIVE ALTERNATE PLANS - POWER
Approved: Project Director	
Project Title	EXPAND COMMUNITY LIVING CENTER PHASE 1
Location	2615 E. CLINTON AVE. FRESNO, CA 93703-2223
Date	OCTOBER 29, 2015
Checked	MT
Drawn	NS/GL
Project Number	570-218
Building Number	31
Drawing Number	EP106
Dwg.	of

Office of Construction and Facilities Management

Department of Veterans Affairs

VA FORM 08-6231

1 LIGHTING PLAN - NORTH WING
1/8" = 1'-0"

N

100% CONSTRUCTION DOCUMENTS
NOVEMBER 19, 2015

GENERAL SHEET NOTES

A. REFER TO THE ARCHITECTURAL DRAWINGS REFLECTED CEILING PLAN FOR EXACT LUMINAIRE LOCATIONS.

B. ALL CONTROL SWITCHES AND SWITCHING ARE LOW VOLTAGE WIRING. REFER TO SHEET E4.00 FOR LIGHTING CONTROL SWITCHING DIAGRAMS.

C. REFER TO LIGHTING CONTROL RELAY PANEL SCHEDULE FOR ADDITIONAL INFORMATION ON LOW VOLTAGE CONTROL SWITCHING AND LIGHTING RELAY INTERFACE. SEE SHEET ES 602

D. PROVIDE FIXTURE TYPE F AT ATTIC SPACE AT 16 FEET ON CENTER. PROVIDE CONTROL SWITCH AT ATTIC SPACE DOOR/STAIRS ACCESS. CONNECT TO CIRCUIT 1NH1-10.

E. AT EACH RESIDENT BEDROOM, PROVIDE (1) JUNCTION BOX FOR 277/480V CIRCUIT AND (1) JUNCTION BOX FOR 120V/208V CIRCUIT. LOCATE JUNCTION BOX ABOVE THE DOOR CEILING SPACE.

KEY NOTES

1. ROUTE HOMERUN VIA LIGHTING CONTROL RELAY PANEL 'LCP'
2. LOW VOLTAGE CONTROL SWITCH TO RELAY AT LCP CONNECTED TO PANEL 1NH1-4 SERVING CORRIDOR 1D-1.
3. LOW VOLTAGE CONTROL SWITCH TO RELAY AT LCP SERVING LIVING ROOM 1D16.

KEY PLAN

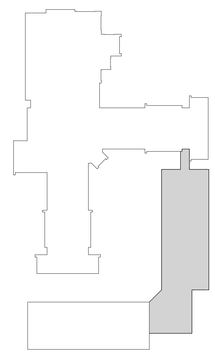

Revisions:	Date

CONSULTANTS:

MAZZETTI
220 Montgomery Street, Suite 650
San Francisco, CA 94104
TEL 415.632.3266
www.mazzetti.com

PROJECT NUMBER: 120-099

ARCHITECT/ENGINEERS:

POLYTECH ASSOCIATES INC.

POLYTECH ASSOCIATES INC
235 Pine Street, 17th Floor
San Francisco, CA 94104
TEL (415) 397-3117
FAX (415) 397-1517

Drawing Title	LIGHTING PLAN - NORTH WING
Approved: Project Director	
Project Title	EXPAND COMMUNITY LIVING CENTER PHASE 1
Location	2615 E. CLINTON AVE. FRESNO, CA 93703-2223
Date	OCTOBER 29, 2015
Checked	MT
Drawn	NS/GL
Project Number	570-218
Building Number	31
Drawing Number	EL201
Dwg. of	

Office of Construction and Facilities Management

Department of Veterans Affairs

VA FORM 08-6231

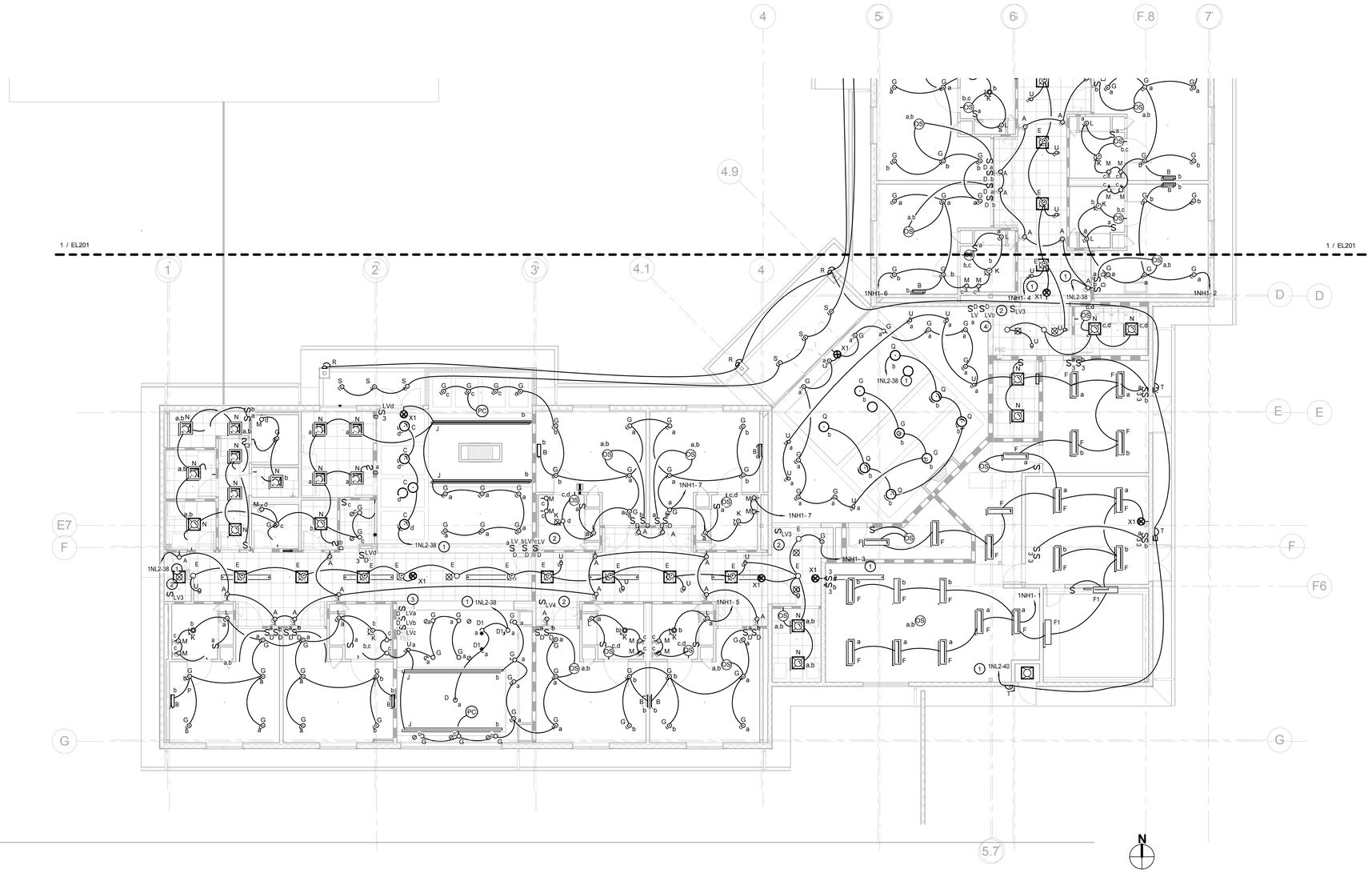

1 LIGHTING PLAN - WEST WING
1/8" = 1'-0"

GENERAL SHEET NOTES

A. REFER TO THE ARCHITECTURAL DRAWINGS REFLECTED CEILING PLAN FOR EXACT LUMINAIRE LOCATIONS.

B. ALL CONTROL SWITCHES AND SWITCHING ARE LOW VOLTAGE WIRING. REFER TO SHEET E4.00 FOR LIGHTING CONTROL SWITCHING DIAGRAMS.

C. REFER TO LIGHTING CONTROL RELAY PANEL SCHEDULE FOR ADDITIONAL INFORMATION ON LOW VOLTAGE CONTROL SWITCHING AND LIGHTING RELAY INTERFACE. SEE SHEET ES 602.

D. PROVIDE FIXTURE TYPE F AT ATTIC SPACE. SEE SHEET AS311 DETAIL #2. PROVIDE CONTROL SWITCH AT ATTIC SPACE DOOR/STAIRS ACCESS. CONNECT TO CIRCUIT 1NH1-10.

E. AT EACH RESIDENT BEDROOM, PROVIDE (1) JUNCTION BOX FOR 277/480V CIRCUIT AND (1) JUNCTION BOX FOR 120V/208V CIRCUIT. LOCATE JUNCTION BOX ABOVE THE DOOR CEILING SPACE.

KEY NOTES

1. ROUTE HOMERUN VIA LIGHTING CONTROL RELAY PANEL 'LCP'
2. LOW VOLTAGE CONTROL SWITCH TO RELAY AT LCP CONNECTED TO PANEL 1NH1-4 SERVING CORRIDOR 1E-1.
3. LOW VOLTAGE CONTROL SWITCH TO RELAY AT LCP SERVING LIVING ROOM 1E12.
4. LOW VOLTAGE CONTROL SWITCH TO RELAY AT LCP SERVING LIVING ROOM 1E16.
5. PHILIPS DAYBRITE STRIPLIGHT FLUORESCENT FIXTURE CAT. T232UNV1/2EB- WITH (2) 32 T8 LAMPS 4 FEET.
6. EXIT SIGN THOMAS BETTS WG1-E LED

KEY PLAN

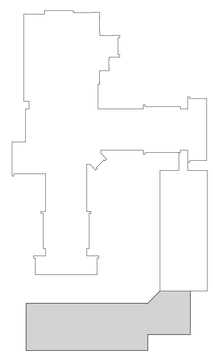

100% CONSTRUCTION DOCUMENTS
NOVEMBER 19, 2015

Revisions:	Date

CONSULTANTS:

MAZZETTI
220 Montgomery Street, Suite 650
San Francisco, CA 94104
TEL: 415.632.3266
www.mazzetti.com

PROJECT NUMBER: 120-099

ARCHITECT/ENGINEERS:

POLYTECH ASSOCIATES INC.

235 Pine Street, 17th Floor
San Francisco, CA 94104
TEL (415) 397-3117
FAX (415) 397-1517

Drawing Title	LIGHTING PLAN - WEST WING
Approved: Project Director	
Project Title	EXPAND COMMUNITY LIVING CENTER PHASE 1
Location	2615 E. CLINTON AVE. FRESNO, CA 93703-2223
Date	OCTOBER 29, 2015
Checked	MT
Drawn	NS/GL
Project Number	570-218
Building Number	31
Drawing Number	EL202
Dwg. of	

Office of Construction and Facilities Management

Department of Veterans Affairs

VA FORM 08-6231

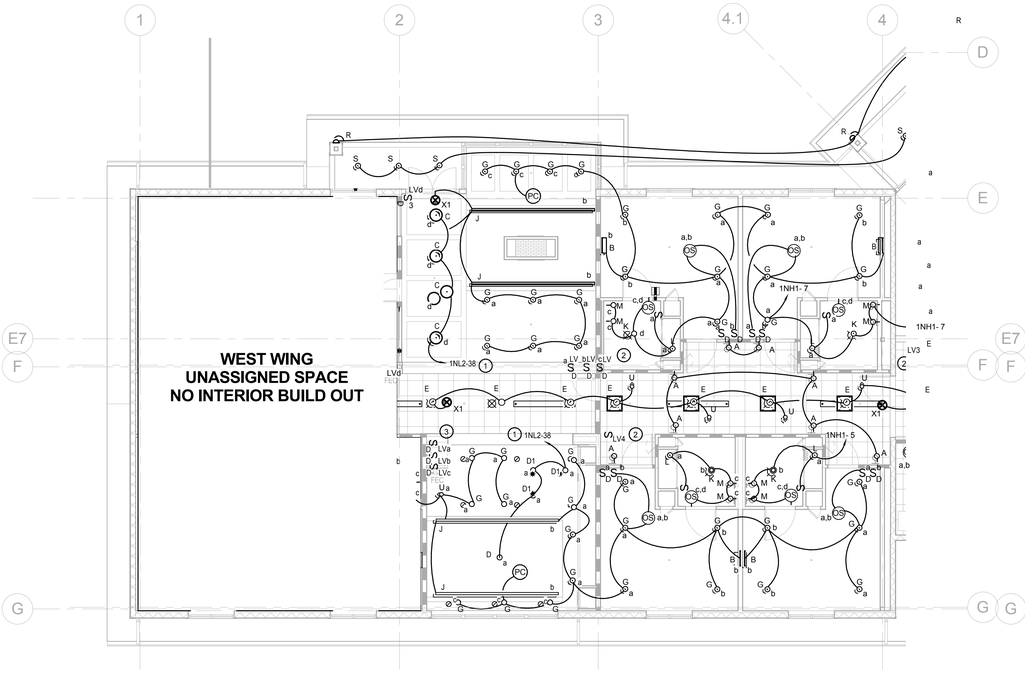

1 DEDUCT ALT #2, #5 - WEST WING
UNASSIGNED SPACE LIGHTING PLAN
1/8" = 1'-0"

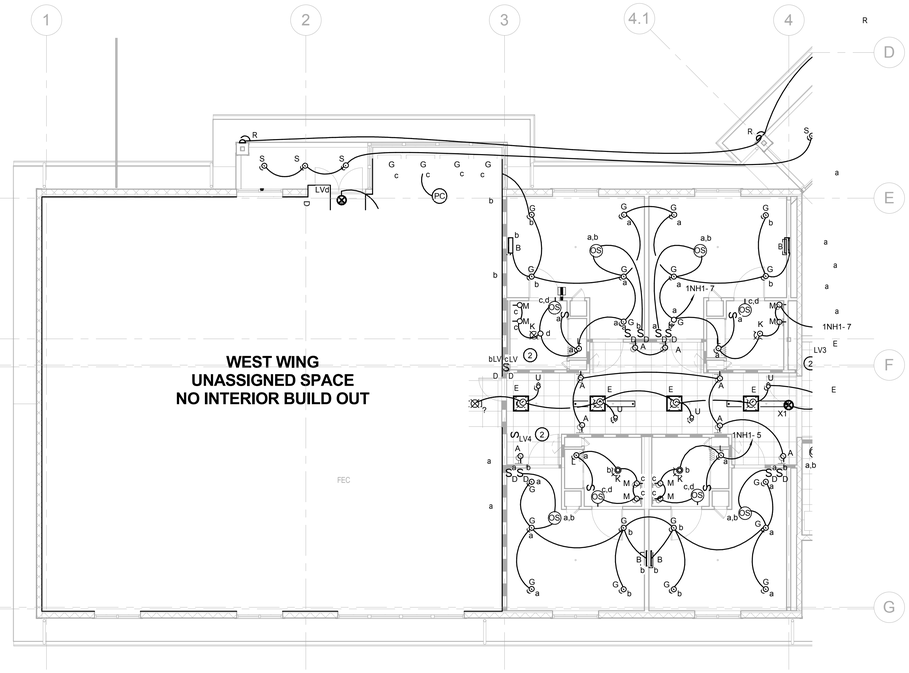

2 DEDUCT ALT #2 - WEST WING
UNASSIGNED SPACE LIGHTING PLAN
1/8" = 1'-0"

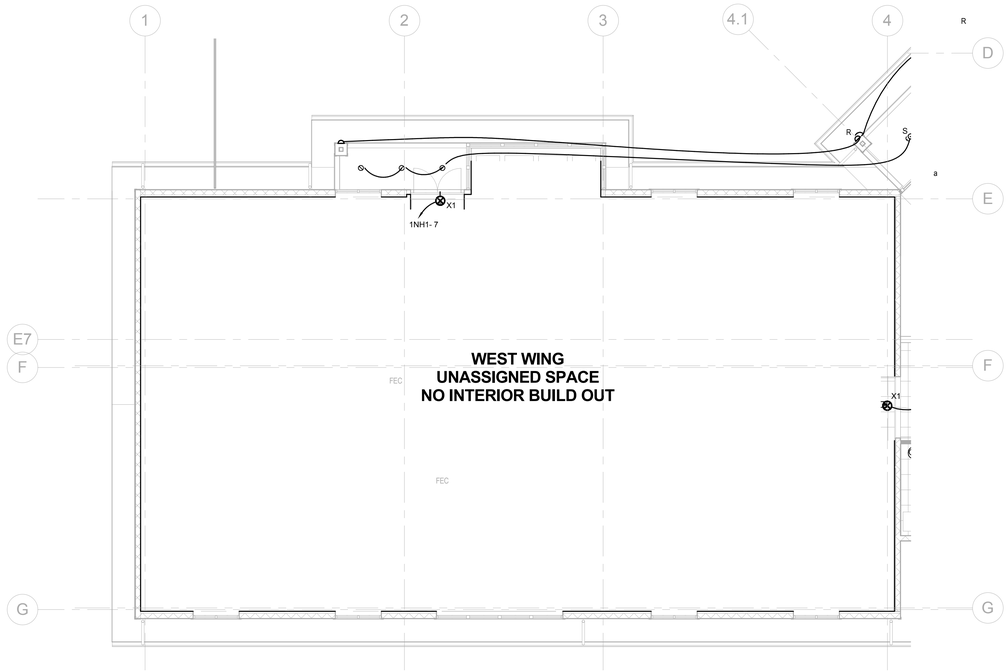

3 DEDUCT ALT #2 , # 5 & 10 - WEST WING
UNASSIGNED SPACE LIGHTING PLAN
1/8" = 1'-0"

GENERAL SHEET NOTES

A. REFER TO THE ARCHITECTURAL DRAWINGS REFLECTED CEILING PLAN FOR EXACT LUMINAIRE LOCATIONS.

B. ALL CONTROL SWITCHES AND SWITCHING ARE LOW VOLTAGE WIRING. REFER TO SHEET E4.00 FOR LIGHTING CONTROL SWITCHING DIAGRAMS.

C. REFER TO LIGHTING CONTROL RELAY PANEL SCHEDULE FOR ADDITIONAL INFORMATION ON LOW VOLTAGE CONTROL SWITCHING AND LIGHTING RELAY INTERFACE. SEE SHEET ES 602.

D. PROVIDE FIXTURE TYPE F AT ATTIC SPACE AT 16 FEET ON CENTER. PROVIDE CONTROL SWITCH AT ATTIC SPACE DOOR/STAIRS ACCESS. CONNECT TO CIRCUIT 1NH1-10.

E. AT EACH RESIDENT BEDROOM, PROVIDE (1) JUNCTION BOX FOR 277/480V CIRCUIT AND (1) JUNCTION BOX FOR 120V/208V CIRCUIT. LOCATES JUNCTION BOX ABOVE THE DOOR CEILING SPACE.

KEY NOTES

1. ROUTE HOMERUN VIA LIGHTING CONTROL RELAY PANEL 'LCP'
2. LOW VOLTAGE CONTROL SWITCH TO RELAY AT LCP CONNECTED TO PANEL 1NH1-4 SERVING CORRIDOR 1E-1.
3. LOW VOLTAGE CONTROL SWITCH TO RELAY AT LCP SERVING LIVING ROOM 1E12.
4. LOW VOLTAGE CONTROL SWITCH TO RELAY AT LCP SERVING LIVING ROOM 1E16.
5. PHILIPS DAYBRITE STRIPLIGHT FLUORESCENT FIXTURE CAT. T232UNV1/2EB- WITH (2) 32 T8 LAMPS 4 FEET.
6. EXIT SIGN THOMAS BETTS WG1-E LED

100% CONSTRUCTION DOCUMENTS
NOVEMBER 19, 2015

Revisions: | Date

CONSULTANTS:

MAZZETTI
220 Montgomery Street, Suite 650
San Francisco, CA 94104
TEL: 415.632.3266
www.mazzetti.com
PROJECT NUMBER: 120-099

REGISTERED PROFESSIONAL ENGINEER
JOHN MCARTHUR
No. M31122
EXP. 09/30/15
MECHANICAL
STATE OF CALIFORNIA

ARCHITECT/ENGINEERS:

POLYTECH ASSOCIATES INC

POLYTECH ASSOCIATES INC.
235 Pine Street, 17th Floor
San Francisco, CA 94104
TEL (415) 397-3117
FAX (415) 397-1517

Drawing Title: DEDUCTIVE ALTERNATE PLANS - LIGHTING

Approved: Project Director

Project Title: EXPAND COMMUNITY LIVING CENTER PHASE 1

Location: 2615 E. CLINTON AVE. FRESNO, CA 93703-2223

Date: OCTOBER 29, 2015 | Checked: MT | Drawn: NS/GL

Project Number: 570-218

Building Number: 31

Drawing Number: EL203

Dwg. of

Office of Construction and Facilities Management

Department of Veterans Affairs

VA FORM 08-6231

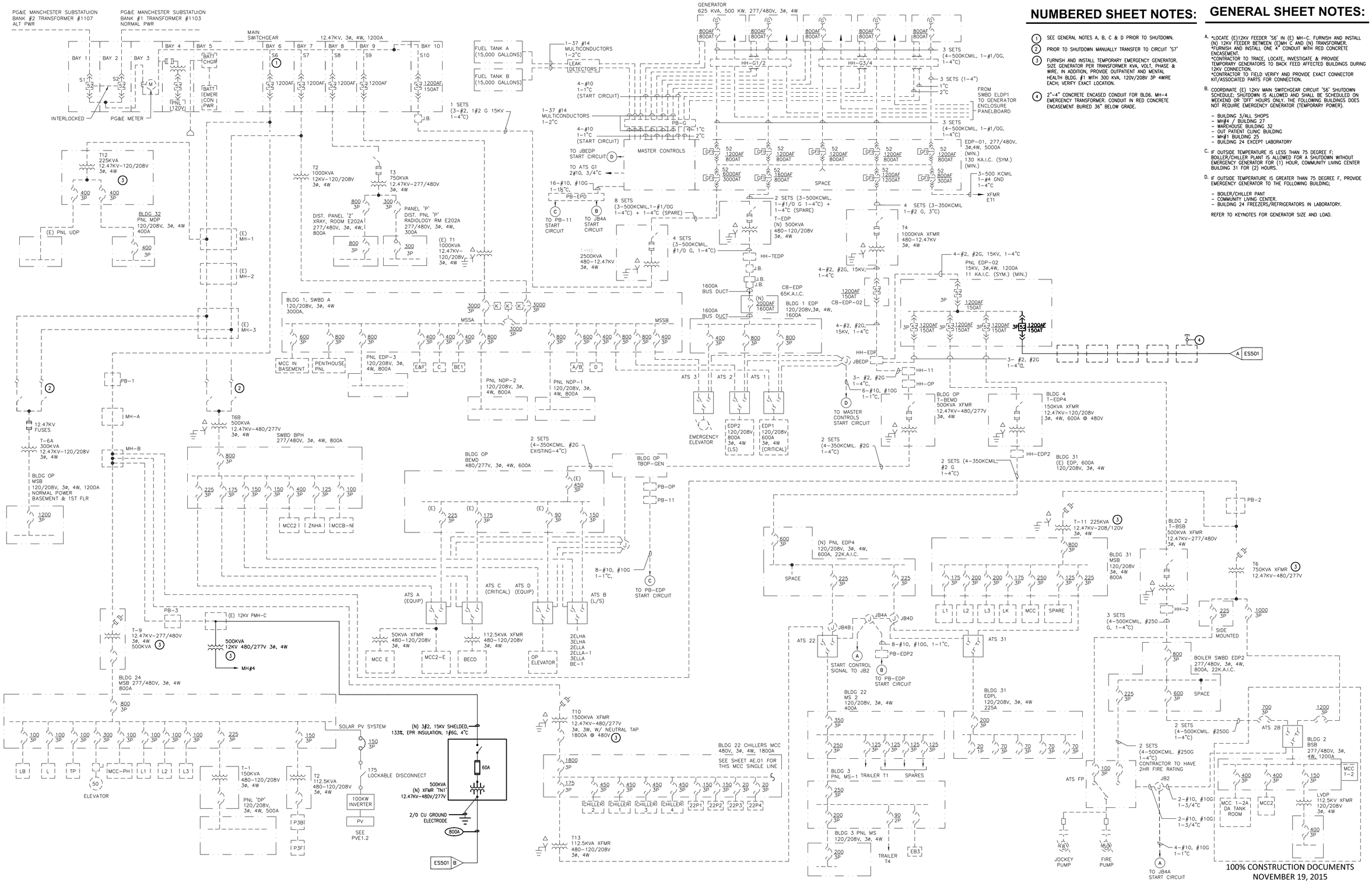

NUMBERED SHEET NOTES:

1. SEE GENERAL NOTES A, B, C & D PRIOR TO SHUTDOWN.
2. PRIOR TO SHUTDOWN MANUALLY TRANSFER TO CIRCUIT "S7"
3. FURNISH AND INSTALL TEMPORARY EMERGENCY GENERATOR. SIZE GENERATOR PER TRANSFORMER KVA, VOLT, PHASE & WIRE. IN ADDITION, PROVIDE OUTPATIENT AND MENTAL HEALTH BLDG. #1 WITH 300 KVA, 120V/208V 3P 4WIRE EACH; VERIFY EXACT LOCATION.
4. 2"-4" CONCRETE ENCASED CONDUIT FOR BLD6. MH-4 EMERGENCY TRANSFORMER. CONDUIT IN RED CONCRETE ENCASEMENT BURIED 36" BELOW GRADE.

GENERAL SHEET NOTES:

A. *LOCATE (E)12KV FEEDER 'S6' IN (E) MH-C. FURNISH AND INSTALL (N) 12KV FEEDER BETWEEN (E)MH C AND (N) TRANSFORMER.
*FURNISH AND INSTALL ONE 4" CONDUIT WITH RED CONCRETE ENCASEMENT
*CONTRACTOR TO TRACE, LOCATE, INVESTIGATE & PROVIDE TEMPORARY GENERATORS TO BACK FEED AFFECTED BUILDINGS DURING 12KV CONNECTION.
*CONTRACTOR TO FIELD VERIFY AND PROVIDE EXACT CONNECTOR KIT/ASSOCIATED PARTS FOR CONNECTION.

B. COORDINATE (E) 12KV MAIN SWITCHGEAR CIRCUIT 'S6' SHUTDOWN SCHEDULE; SHUTDOWN IS ALLOWED AND SHALL BE SCHEDULED ON WEEKEND OR 'OFF' HOURS ONLY. THE FOLLOWING BUILDINGS DOES NOT REQUIRE EMERGENCY GENERATOR (TEMPORARY POWER).

- BUILDING 3/ALL SHOPS
- MH#4 / BUILDING 27
- WAREHOUSE BUILDING 32
- OUT PATIENT CLINIC BUILDING
- MH#1 BUILDING 25
- BUILDING 24 EXCEPT LABORATORY

C. IF OUTSIDE TEMPERATURE IS LESS THAN 75 DEGREE F; BOILER/CHILLER PLANT IS ALLOWED FOR A SHUTDOWN WITHOUT EMERGENCY GENERATOR FOR (1) HOUR, COMMUNITY LIVING CENTER BUILDING 31 FOR (2) HOURS.

D. IF OUTSIDE TEMPERATURE IS GREATER THAN 75 DEGREE F, PROVIDE EMERGENCY GENERATOR TO THE FOLLOWING BUILDING;

- BOILER/CHILLER PANT
- COMMUNITY LIVING CENTER.
- BUILDING 24 FREEZERS/REFRIGERATORS IN LABORATORY.

REFER TO KEYNOTES FOR GENERATOR SIZE AND LOAD.

100% CONSTRUCTION DOCUMENTS
NOVEMBER 19, 2015

Revisions:	Date

CONSULTANTS:

MAZZETTI
220 Montgomery Street, Suite 650
San Francisco, CA 94104
TEL: 415.362.3266
www.mazzetti.com
Project Number: 120-099

REGISTERED PROFESSIONAL ENGINEER — WALTER N. VERNON — No. E013790 — EXP. 12/31/2015 — ELECTRICAL — STATE OF CALIFORNIA

ARCHITECT/ENGINEERS:

POLYTECH ASSOCIATES INC
POLYTECH ASSOCIATES INC.
235 Pine Street, 17th Floor
San Francisco, CA 94104
TEL (415) 397-3117
FAX (415) 397-1517

Drawing Title	SINGLE-LINE DIAGRAM
Approved: Project Director	
Project Title	EXPAND COMMUNITY LIVING CENTER PHASE 1
Location	2615 E. CLINTON AVE. FRESNO, CA 93703-2223
Date	OCTOBER 29, 2015
Checked	MT WV
Drawn	NS/GL RP
Project Number	570-218
Building Number	31
Drawing Number	ES500
Dwg. of	

Office of Construction and Facilities Management

P:\120\120-099 VA Fresno Expand Community Living Center\Dwgs\ELEC\ES500\ES500\ES502\ES503.dwg - ES500 - eapaterson - Nov 19, 2015 - 4:21pm

VA FORM 08-6231

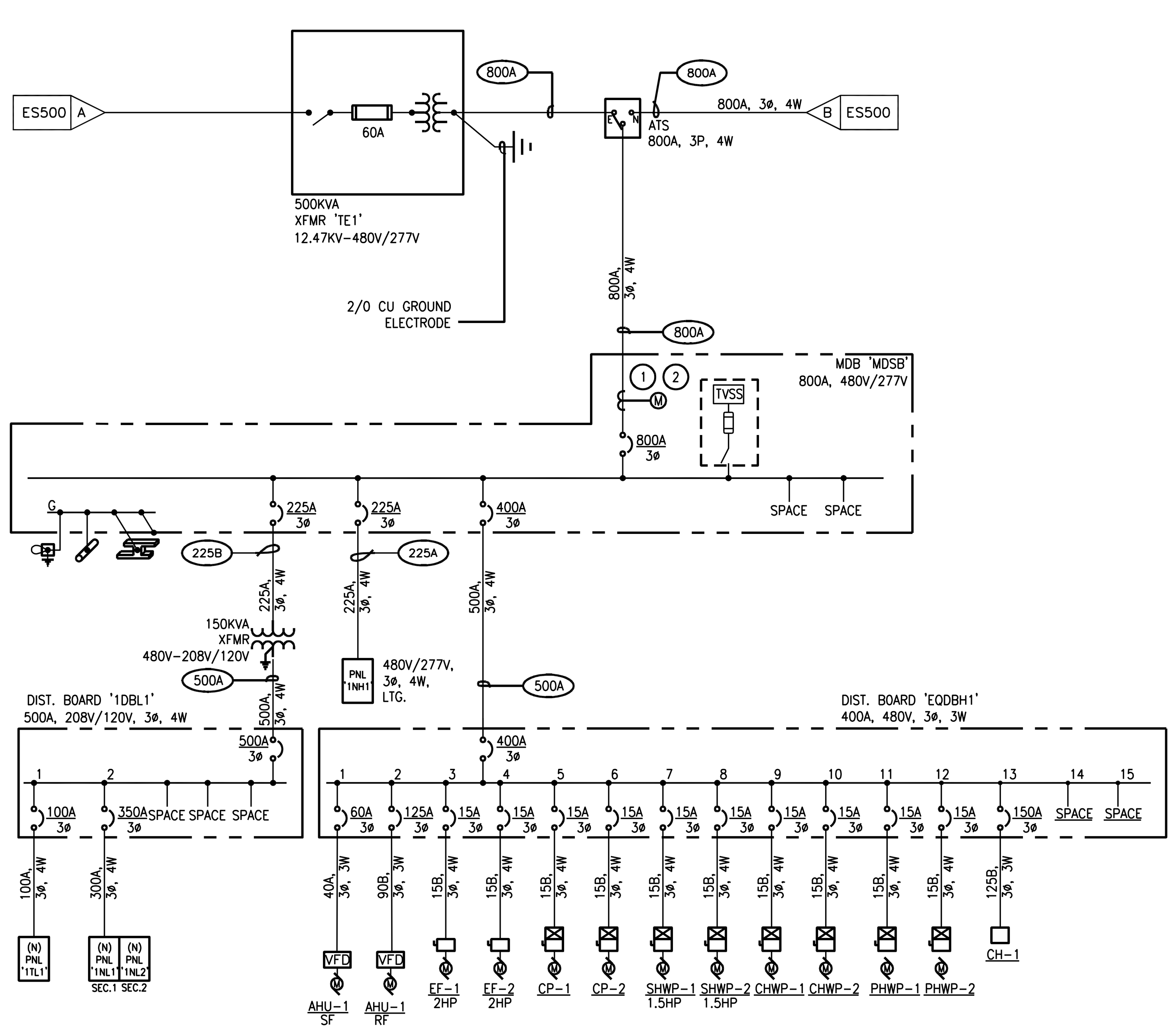

1 / ES501 PARTIAL SINGLE-LINE DIAGRAM

NOT TO SCALE

KEYNOTES (PARTIAL SINGLE LINE DIAGRAM)

(1) GENERAL ELECTRIC EPM 9900 ADVANCED POWER QUALITY METER REFER TO SPEC SECTION 251010.

(2) PROVIDE 1 1/4" AND CABLES TO BMS SYSTEM PANEL.

FEEDER SCHEDULE (COPPER CONDUCTORS)

FEEDER DESIGNATION	CONDUCTOR SIZE (PROVIDE FOR 3-PHASE CONDUCTORS)	NEUTRAL SIZE	GROUND SIZE	CONDUIT (3C & G)	CONDUIT (3C+N+G)
800A	2 #500 MCM PER PHASE	2 #500 MCM	2#1/0	(2)4"	(2) 4"
500A	2 #250 MCM PER PHASE	2 #250 MCM	2#2	(2)2 1/2"	(2)3"
300B	500 MCM	500 MCM	2	3"	3 1/2"
225A	4/0 AWG	4/0 AWG	4	2"	2 1/2"
225B	4/0 AWG	4/0 AWG	4	2"	2 1/2"
125B	1 AWG	1 AWG	8	1 1/2"	2"
100A	1 AWG	1 AWG	8	1 1/2"	2"
90A	2 AWG	2 AWG	8	1 1/4"	1 1/2"
40A	8 AWG	8 AWG	10	1"	1"
15B	12 AWG	12 AWG	12	3/4"	3/4"

FEEDER SCHEDULE NOTES:

1. FEEDER DESIGNATION WITH SUBSCRIPT "G" INDICATES THREE PHASE CONDUCTORS, AND ONE GROUNDING CONDUCTOR.
2. FEEDER DESIGNATION WITH SUBSCRIPT "NG" INDICATES THREE PHASE CONDUCTORS, ONE NEUTRAL CONDUCTOR, & ONE GROUNDING CONDUCTOR.
3. FEEDER DESIGNATION WITH SUBSCRIPT "NNG" INDICATES THREE PHASE CONDUCTORS, TWO NEUTRAL CONDUCTORS, & ONE GROUNDING CONDUCTOR.

1NL1

Main: 350
Enclosure: NEMA 1, SURFACE
AIC Rating: 22,000
Bus Rating (Amps): 400
Volts (L-L): 208
Phase: 3
Wires: 4

Ckt	Description	Load Type	Load (KVA)	OC Device Amps	OC Device Poles	Phase	OC Device Amps	OC Device Poles	Load (KVA)	Load Type	Description	Ckt
1	RECEPTACLES RM. 1D10, 1D11A	2	1.2	20	1	A	20	1	2.0	5	ICEMAKER	2
3	RECEPTACLES RM. 1E04, 1E05	2	1.5	20	1	B	20	1	1.1	2	RECEPTACLES RM. 1D05	4
5	RECEPTACLES RM. 1D17	2	1.3	20	1	C	20	1	0.9	2	RECEPTACLES RM. 1E03	6
7	ICEMAKER	5	0.6	20	1	A	20	1	1.1	2	RECEPTACLES RM. 1D02	8
9	AUTO DOOR	7	1.6	40	1	B	20	1	1.1	2	RECEPTACLES RM. 1D04	10
11	RECEPTACLES RM. 1D01	2	1.1	20	1	C	20	1	1.3	2	RECEPTACLES RM. 1D18	12
13	MICROWAVE	5	1.0	20	1	A	20	1	1.1	2	RECEPTACLES RM. 1D03	14
15	REFRIGERATOR	5	0.6	20	1	B	20	1	0.6	5	ICE MAKER	16
17	DISHWASHER	5	1.2	20	1	C	20	1	1.2	5	DISHWASHER	18
19	RECEPTACLES RM. 1E12	2	1.9	20	1	A	20	1	0.6	5	REFRIGERATOR	20
21	RECEPTACLES RM. 1D12, 1D11	2	0.9	20	1	B	20	1	1.0	5	MICROWAVE	22
23	RECEPTACLES 1D13, 1D15	2	1.5	20	1	C	20	1	1.0	5	TOASTER	24
25	RECEPTACLES 1D16	2	1.1	20	1	A	20	1	0.6	5	NURSE ICE MAKER	26
27	RECEPTACLES 1E18	2	0.4	20	2	B	50	2	4.2	5	COMBO OVEN RANGE	28
29	REFRIGERATOR	5	1.2	20		C			4.2	5	--	30
31	MICROWAVE	5	1.0	20	2	A	50	2	4.2	5	COMBO OVEN RANGE	32
33	REFRIGERATOR	5	1.2	20		B			4.2	5	--	34
35	TRACKER SYSTEM	7	0.40	20	1	C	20	1	1.0	5	AUTO DOOR	36
37	SPARE			20	1	A					SPACE	38
39	SPARE			20	1	B					SPACE	40
41	SPARE			20	1	C					SPACE	42

LOAD TYPE (NUMBER)	0	1	2	3	4	5	6	7	
LOAD TYPE (DESCRIPTION)	P.Rm.L	Lighting	Receps	Motors	L. Mot.	Kitch	Elevator	Equip	Total
TOTAL CONNECTED LOAD	0.00	0.00	17.48	0.00	0.00	31.60	0.00	2.00	51.1

*Type 2 (receptacles) formula is as follows: If the Total Connected Load is greater than 10KVA, Then the demand load is ((Connected Load - 10) * .5) +10, Else Demand Load equals Connected Load.

NOTES:
1 - THROUGH FEED LUGS FOR SECT 3
2 -
3 -

1NL2

Main: MLO
Enclosure: NEMA 1, SURFACE
AIC Rating: 22,000
Bus Rating (Amps): 400
Volts (L-L): 208
Phase: 3
Wires: 4

Ckt	Description	Load Type	Load (KVA)	OC Device Amps	OC Device Poles	Phase	OC Device Amps	OC Device Poles	Load (KVA)	Load Type	Description	Ckt
1	DRYER	7	2.5	30	2	A	20	1	1.2	7	WASHER	2
3	--	7	2.5	30	--	B	20	1	1.2	7	WASHER	4
5	DRYER	7	2.5	30	2	C	20	1	1.0	7	MGA-1	6
7	--	7	2.5	30	--	A	20	1	1.0	7	MGA-2	8
9	RECEPTACLES RM. 1E08, 1E09	2	0.9	20	2	B	20	1	0.9	2	RECEPTACLES RM. 1E08, 1E07	10
11	RECEPTACLES RM. 1E10	2	1.3	20	--	C	20	1	1.1	2	RECEPTACLES RM. 1E11	12
13	RECEPTACLES RM. 1E13	2	1.1	20	1	A	20	1	1.1	2	RECEPTACLES RM. 1E01	14
15	RECEPTACLES RM. 1E02	2	1.1	20	1	B	20	1	1.3	2	RECEPTACLES RM. 1E14	16
17	OMNI CELL	7	1.0	20	1	C	20	1	0.2	7	PYXIS	18
19	BLANKET WARMER	7	1.0	20	1	A	20	1	1.0	7	OMNI CELL	20
21	PYXIS	7	1.0	20	1	B	20	1	1.0	7	BLANKET WARMER	22
23	TOASTER	5	1.0	20	1	C	20	1	1.0	7	MICROWAVE	24
25	SPARE			20	1	A	20	1	0.0		SPARE	26
27	SPARE			20	1	B	20	1	0.0		SPARE	28
29	ELECTRIC WATER COOLER		1.0	20	1	C	20	1	1.0	3	HWRCP-1	30
31	REC. MECH. EQUIP. AREAS		1.1	20	1	A	20	1	1.0	3	ST-1	32
33	SPARE			20	1	B	20	1	1.5	3	BH-1, BH-2	34
35	SPARE			20	1	C	20	1	0.5	3	WH-1, WH-2	36
37	SPARE			20	1	A	20	1	1.50	1	LTG. INTERIOR	38
39	SPARE			20	1	B	20	1	1.00	2	LTG. EXTERIOR	40
41	WP RECEPTACLES CHILLER AREA		0.7	20	1	C	20	1	0.40	2	WP RECEPTRACLES ROOF	42

LOAD TYPE (NUMBER)	0	1	2	3	4	5	6	7	
LOAD TYPE (DESCRIPTION)	P.Rm.L	Lighting	Receps	Motors	L. Mot.	Kitch	Elevator	Equip	Total
TOTAL CONNECTED LOAD	0.00	1.50	10.20	4.00	0.00	1.00	0.00	20.60	37.3

*Type 2 (receptacles) formula is as follows: If the Total Connected Load is greater than 10KVA, Then the demand load is ((Connected Load - 10) * .5) +10, Else Demand Load equals Connected Load.

NOTES:
1 - THROUGH FEED LUGS FOR SECT 3
2 -
3 -

1NH1

Main: MLO
Enclosure: NEMA 1, SURFACE
AIC Rating: 22,000
Bus Rating (Amps): 225
Volts (L-L): 208
Phase: 3
Wires: 4

Ckt	Description	Load Type	Load (KVA)	OC Device Amps	OC Device Poles	Phase	OC Device Amps	OC Device Poles	Load (KVA)	Load Type	Description	Ckt
1	LTG. WEST WING EAST AREA	1	1.9	20	1	A	20	1	1.2	1	LTG. NORTH WIN EAST AREA	2
3	LTG. WEST WING CORRIDOR	1	2.1	20	1	B	20	1	2.3	1	LTG. NORTH WING CORRIDOR	4
5	LTG. WEST WING SOUTH AREA	1	1.2	20	1	C	20	1	1.7	1	LTG. NORTH WING WEST AREA	6
7	LTG. WEST WING NORTH AREA	1	1.6	20	1	A	20	1	0.6	1	EXT. LTG.	8
9	SPARE			20	1	B	20	1	1.0	1	LTG. ATTIC SPACE	10
11	SPARE			20	1	C	20	1	0.3	1	LTG. EXTERIORS	12
13	SPARE			20	1	A	20				SPARE	14
15	SPARE			20	1	B	20				SPARE	16
17	SPARE			20	1	C	20				SPARE	18
19	SPARE			20	1	A	20				SPARE	20
21	SPARE			20	1	B	20				SPARE	22
23	SPACE				1	C					SPACE	24
25	SPACE				1	A					SPACE	26
27	SPACE				1	B					SPACE	28
29	SPACE				1	C					SPACE	30
31	SPACE				1	A					SPACE	32
33	SPACE				1	B					SPACE	34
35	SPACE				1	C					SPACE	36
37	SPACE				1	A					SPACE	38
39	SPACE				1	B					SPACE	40
41	SPACE				1	C					SPACE	42

LOAD TYPE (NUMBER)	0	1	2	3	4	5	6	7	
LOAD TYPE (DESCRIPTION)	P.Rm.L	Lighting	Receps	Motors	L. Mot.	Kitch	Elevator	Equip	Total
TOTAL CONNECTED LOAD	0.00	13.80	0.00	0.00	0.00	0.00	0.00	0.00	13.8

*Type 2 (receptacles) formula is as follows: If the Total Connected Load is greater than 10KVA, Then the demand load is ((Connected Load - 10) * .5) +10, Else Demand Load equals Connected Load.

NOTES:
1 - THROUGH FEED LUGS FOR SECT 3
2 -
3 -

1TL1

Main: MLO
Enclosure: NEMA 1, SURFACE
AIC Rating: 22,000
Bus Rating (Amps): 100
Volts (L-L): 208
Phase: 3
Wires: 4

Ckt	Description	Load Type	Load (KVA)	OC Device Amps	OC Device Poles	Phase	OC Device Amps	OC Device Poles	Load (KVA)	Load Type	Description	Ckt
1	RECEPTACLE IT	2	1.0	20	1	A	20				SPARE	2
3	RECEPTACLE IT	2	1.0	20	1	B	20				SPARE	4
5	RECEPTACLE IT	2	1.1	20	1	C	20				SPARE	6
7	SPARE			20	1	A	20				SPARE	8
9	SPARE			20	1	B	20				SPARE	10
11	SPARE			20	1	C	20				SPARE	12
13	SPARE			20	1	A	20				SPARE	14
15	SPARE			20	1	B	20				SPARE	16
17	SPARE			20	1	C	20				SPARE	18
19	SPARE			20	1	A	20				SPARE	20
21	SPARE			20	1	B	20				SPARE	22
23	SPARE			20	1	C	20				SPARE	24
25	SPARE			20	1	A	20				SPARE	26
27	SPARE			20	1	B	20				SPARE	28
29	SPARE			20	1	C	20				SPARE	30
31	SPARE			20	1	A	20				SPARE	32
33	SPACE					B					SPACE	34
35	SPACE					C					SPACE	36
37	SPACE					A					SPACE	38
39	SPACE					B					SPACE	40
41	SPACE					C					SPACE	42

LOAD TYPE (NUMBER)	0	1	2	3	4	5	6	7	
LOAD TYPE (DESCRIPTION)	P.Rm.Lt	Lighting	Receps	Motors	L. Mot.	Kitch	Elevator	Equip	Total
TOTAL CONNECTED LOAD	0.00	0.00	3.08	0.00	0.00	0.00	0.00	0.00	3.1

*Type 2 (receptacles) formula is as follows: If the Total Connected Load is greater than 10KVA, Then the demand load is ((Connected Load - 10) * .5) +10, Else Demand Load equals Connected Load.

NOTES:
1 - THROUGH FEED LUGS FOR SECT 3
2 -
3 -

LIGHTING RELAY PANEL SCHEDULE

PANEL DESIGNATION: LCP
LOCATION: IT ROOM
TRANSF VOLTAGE: 120/277V-24V

RELAY #	PANEL & CIRCUIT	DESCRIPTION	SWITCHBANK/SWITCH#	OTHER CONTROLS *
1	1NH1-4	DECK 2ND FLOOR	$LV	
2	1NH1-6	DECK 2ND FLOOR	$LV	TC/PC
3	1NH1-1	CORRIDOR 2ND FLOOR	$LV	
4	1NH1-3	CORRIDOR 2ND FLOOR	$LV	
5	1NH1-5	CORRIDOR 2ND FLOOR	$LV	TC/PC
6	1NH1-8	CORRIDOR 2ND FLOOR	$LV	TC/PC
7	1NH1-12	EXTERIOR		TC/PC
8		SPARE		
9		SPARE		
10		SPARE		
11	1NL2-38	LIVING RM. 1E03	$LV	TC
12	1NL2-38	DINING AREA 1E12	$LV	TC
13	1NL2-38	CORRIDOR 1E-1	$LV	TC
14	1NL2-38	LOBBY 1E16	$LV	TC
15	1NL2-38	LIVING ROOM 1D16	$LV	TC
16	1NL2-38	CORRIDOR 1D-1	$LV	TC

* OTHER CONTROLS TYPICALLY INCLUDE: TIME CLOCK (TC), PHOTOCELL (PC), SWITCH-MASTER (SM), SWITCH-FLICK WARN (SF), SWITCH-CLEANING (SC), SWITCH-SHED (SS), OR PHONE (P)

100% CONSTRUCTION DOCUMENTS
NOVEMBER 19, 2015

Revisions: | Date

CONSULTANTS:

MAZZETTI
220 Montgomery Street, Suite 650
San Francisco, CA 94104
TEL: 415.362.3266
www.mazzetti.com
Project Number: 120-099

REGISTERED PROFESSIONAL ENGINEER WALTER N. VERNON No. E013790 EXP. 12/31/2015 ELECTRICAL STATE OF CALIFORNIA

ARCHITECT/ENGINEERS:

POLYTECH ASSOCIATES INC
POLYTECH ASSOCIATES INC.
235 Pine Street, 17th Floor
San Francisco, CA 94104
TEL (415) 397-3117
FAX (415) 397-1517

Drawing Title: PANEL SCHEDULES AND PARTIAL SINGLE-LINE DIAGRAM

Approved: Project Director

Project Title: EXPAND COMMUNITY LIVING CENTER PHASE 1

Location: 2615 E. CLINTON AVE. FRESNO, CA 93703-2223

Date: OCTOBER 29, 2015

Checked: MT WV

Drawn: NS/GL RP

Project Number: 570-218

Building Number: 31

Drawing Number: ES501

Dwg. of

Office of Construction and Facilities Management

Department of Veterans Affairs

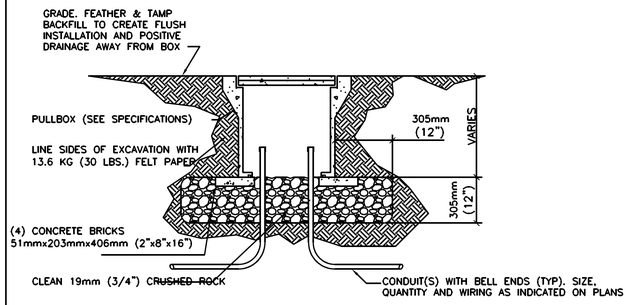

1 ES502 UNDERGROUND CONCRETE PULLBOX -

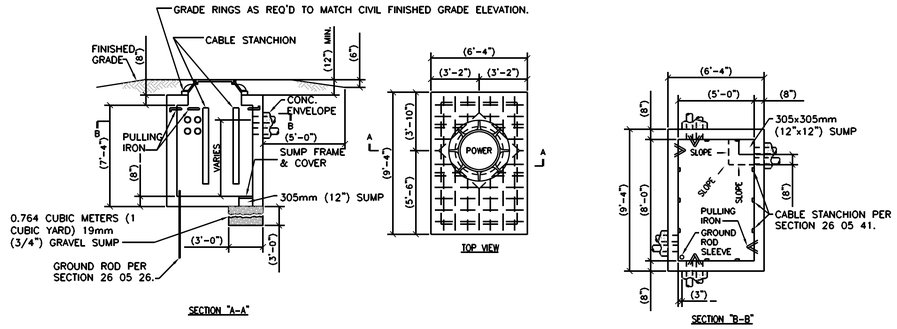

GENERAL NOTE:

1. INCLUDE ALUMINUM LADDER (NOT SHOWN FOR CLARITY)

2 ES502 POWER MANHOLE DETAILS

NTS

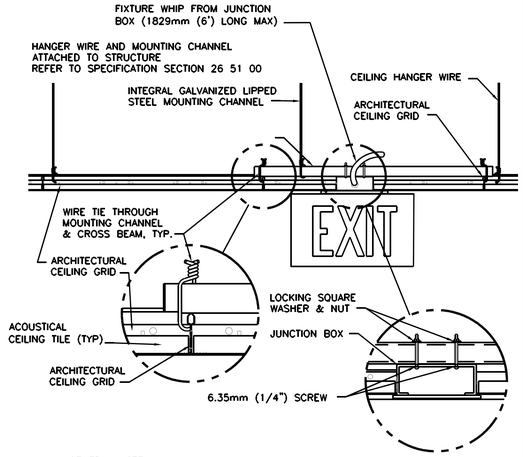

GENERAL NOTE:

1. INSTALL IN ACCORDANCE WITH MANUFACTURER'S MOUNTING INSTRUCTIONS AND USING THE RECOMMENDED MOUNTING HARDWARE.

3 ES502 EXIT SIGN MOUNTING - LAY-IN CEILING

NTS

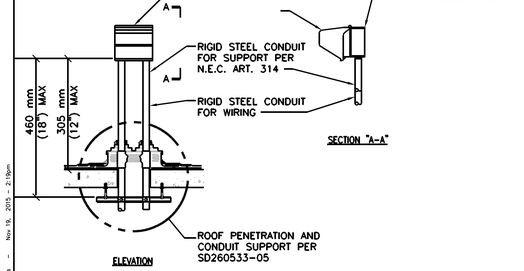

4 ES502 RECEPTACLE ROOF MOUNTING DETAIL

NTS

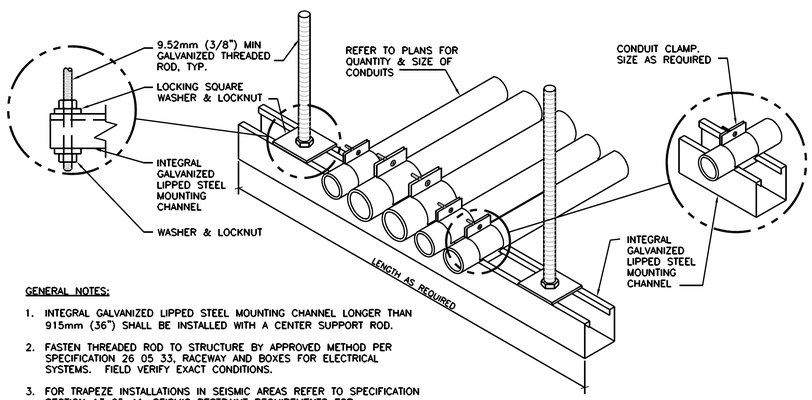

GENERAL NOTES:

1. INTEGRAL GALVANIZED LIPPED STEEL MOUNTING CHANNEL LONGER THAN 915mm (36") SHALL BE INSTALLED WITH A CENTER SUPPORT ROD.
2. FASTEN THREADED ROD TO STRUCTURE BY APPROVED METHOD PER SPECIFICATION 26 05 33, RACEWAY AND BOXES FOR ELECTRICAL SYSTEMS. FIELD VERIFY EXACT CONDITIONS.
3. FOR TRAPEZE INSTALLATIONS IN SEISMIC AREAS REFER TO SPECIFICATION SECTION 13 05 41, SEISMIC RESTRAINT REQUIREMENTS FOR NON-STRUCTURAL COMPONENTS.

5 ES502 CONDUIT TRAPEZE MOUNTING DETAIL

NTS

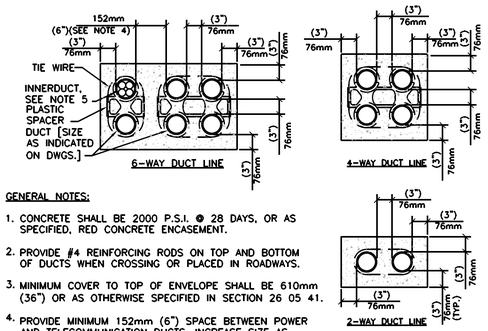

GENERAL NOTES:

1. CONCRETE SHALL BE 2000 P.S.I. @ 28 DAYS, OR AS SPECIFIED, RED CONCRETE ENCASEMENT.
2. PROVIDE #4 REINFORCING RODS ON TOP AND BOTTOM OF DUCTS WHEN CROSSING OR PLACED IN ROADWAYS.
3. MINIMUM COVER TO TOP OF ENVELOPE SHALL BE 610mm (36") OR AS OTHERWISE SPECIFIED IN SECTION 26 05 41.
4. PROVIDE MINIMUM 152mm (6") SPACE BETWEEN POWER AND TELECOMMUNICATION DUCTS. INCREASE SIZE AS REQUIRED.
5. INNERDUCT QUANTITY AND SIZE AS INDICATED ON PLANS.

6 ES502 DUCT BANK DETAILS

NTS

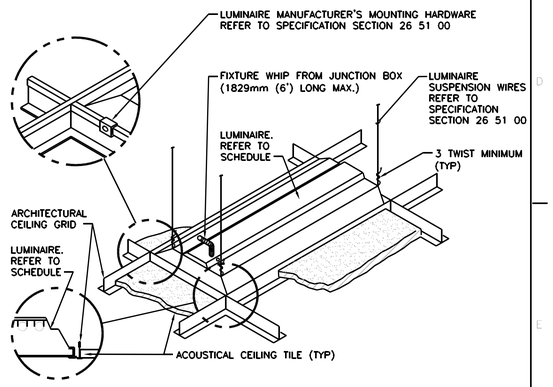

GENERAL NOTE:

1. INSTALL IN ACCORDANCE WITH MANUFACTURER'S MOUNTING INSTRUCTIONS AND USING THE RECOMMENDED MOUNTING HARDWARE.

7 ES502 LUMINAIRE MOUNTING - LAY-IN CEILING

NTS

100% CONSTRUCTION DOCUMENTS
NOVEMBER 19, 2015

Revisions:	Date

CONSULTANTS:

MAZZETTI
220 Montgomery Street, Suite 650
San Francisco, CA 94104
TEL: 415.362.3266
www.mazzetti.com
Project Number: 120-099

REGISTERED PROFESSIONAL ENGINEER No. E013790 EXP. 12/31/2015 ELECTRICAL STATE OF CALIFORNIA

ARCHITECT/ENGINEERS:

POLYTECH ASSOCIATES INC
POLYTECH ASSOCIATES INC.
235 Pine Street, 17th Floor
San Francisco, CA 94104
TEL (415) 397-3117
FAX (415) 397-1517

Drawing Title: ELECTRICAL DETAILS

Approved: Project Director

Project Title: EXPAND COMMUNITY LIVING CENTER PHASE 1

Location: 2615 E. CLINTON AVE. FRESNO, CA 93703-2223

Date: OCTOBER 29, 2015 | Checked: MT WV | Drawn: NS/GL RP

Project Number: 570-218

Building Number: 31

Drawing Number: ES502

Dwg. of

Office of Construction and Facilities Management

State of California

A:\X\X20-099 VA Fresno Expand Community Living Center\Dwgs\ELEC\ES500\ES501\ES502\ES503.dwg - ES502 - Geoplotrots - Nov 19, 2015 - 2:19pm

VA FORM 08-6231

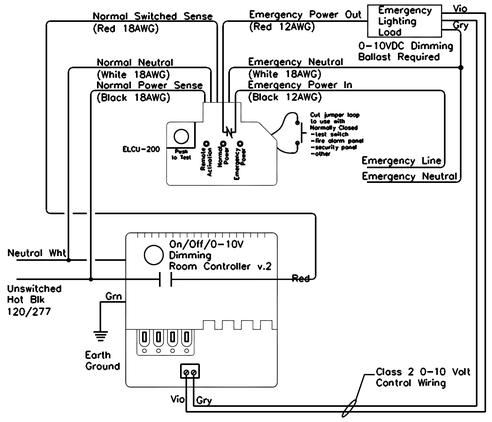

NOTE:

WATT STOPPER DLM LMRC ROOM CONTROLLER WITH ELCU-200 SHUNT RELAY. UPON THE LOSS OF NORMAL POWER, THE ELCU-200 WILL BYPASS THE ROOM CONTROLLER AND FORCE THE EMERGENCY LIGHTS TO FULL ON. THE DIMMING ROOM CONTROLLER WILL FORCE THE DIMMED EMERGENCY FIXTURES TO 100% FULL ON. THE ELCU-200 IS UL924 LISTED.

1 ES503 TYPICAL LIGHTING AND PLUG LOAD WIRING DIAGRAM

SCALE: NTS

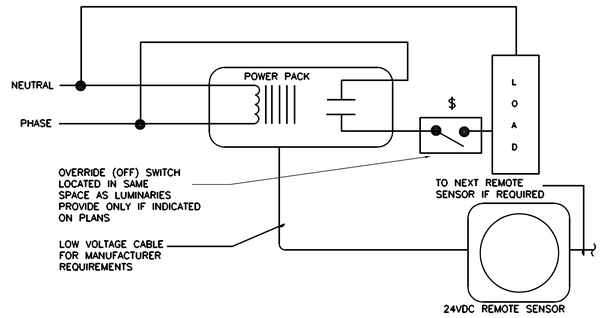

2 ES503 CEILING-MOUNTED OCCUPANCY SENSOR CONTROL DIAGRAM

SCALE: NTS

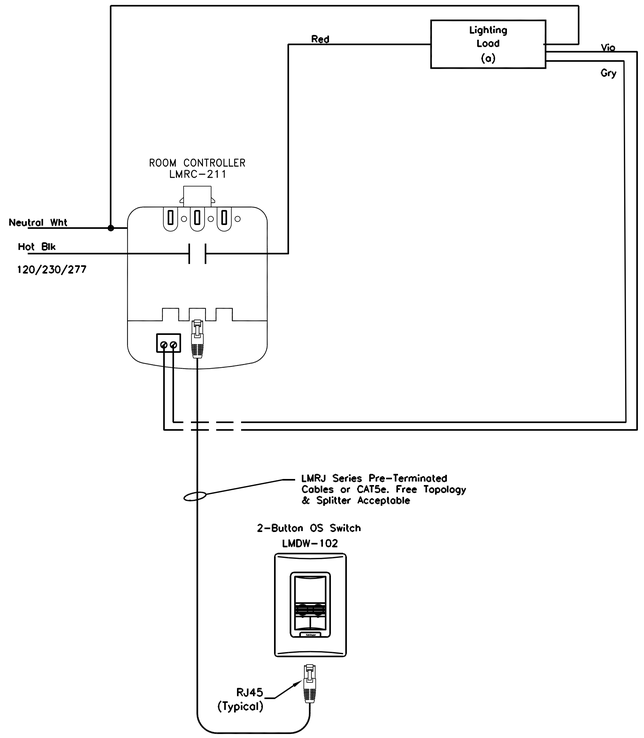

3 ES503 CEILING-MOUNTED OCCUPANCY SENSOR CONTROL DIAGRAM

SCALE: NTS

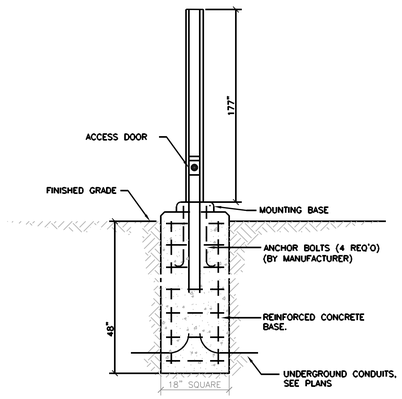

GENERAL NOTES:

1. BACKFILL, CONCRETE, REINFORCING STEEL, AND ANCHOR BOLTS ARE SHOWN FOR REFERENCE ONLY. STRUCTURAL DESIGN IS SHOWN ON STRUCTURAL DRAWINGS.
2. REFER TO SPECIFICATIONS SECTION 26 56 00 FOR MOUNTING AND LEVELING REQUIREMENTS.

5 ES503 WALK LIGHT MOUNTING DETAIL

NTS

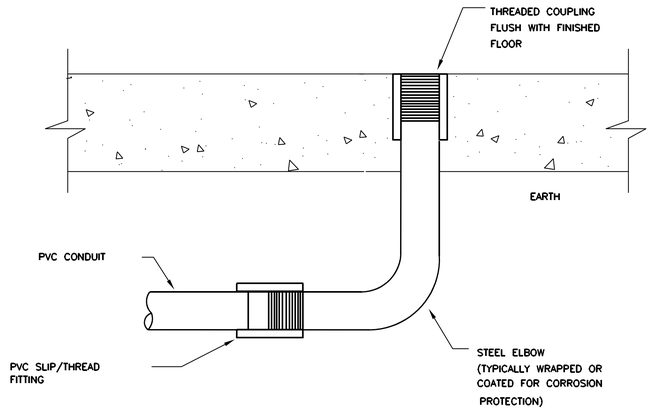

4 ES503 CONDUIT STUB-UP DETAIL

NTS

100% CONSTRUCTION DOCUMENTS
NOVEMBER 19, 2015

Revisions:	Date

CONSULTANTS:

MAZZETTI
220 Montgomery Street, Suite 650
San Francisco, CA 94104
TEL: 415.362.3266
www.mazzetti.com
Project Number: 120-099

REGISTERED PROFESSIONAL ENGINEER
WALTER N. VERMUL
No. E013790
EXP. 12/31/2015
ELECTRICAL
STATE OF CALIFORNIA

ARCHITECT/ENGINEERS:

POLYTECH ASSOCIATES INC

POLYTECH ASSOCIATES INC.
235 Pine Street, 17th Floor
San Francisco, CA 94104
TEL (415) 397-3117
FAX (415) 397-1517

Drawing Title: ELECTRICAL DETAILS

Approved: Project Director

Project Title: EXPAND COMMUNITY LIVING CENTER PHASE 1

Location: 2615 E. CLINTON AVE. FRESNO, CA 93703-2223

Date: OCTOBER 29, 2015 | Checked: MT WV | Drawn: NS/GL RP

Project Number: 570-218

Building Number: 31

Drawing Number: ES503

Dwg. of

Office of Construction and Facilities Management

P:\120\120-099 VA Fresno Expand Community Living Center\Dwgs\ES\ES503\ES503\ES503.dwg - ES503 - sgoodstein - Nov 19, 2015 - 2:19pm

VA FORM 08-6221