PLUMBING ABBREVIATIONS

A	AQUASTAT
@	AT
&	AND
'	FEET, FOOT
"	INCHES
A/E	ARCHITECT / ENGINEER
AD	AREA DRAIN
AFF	ABOVE FINISH FLOOR
AFG	ABOVE FINISH GRADE
AG	AIR GAP
AP	ACCESS PANEL
ASME	AMERICAN SOCIETY MECHANICAL ENGINEERS
BFP	REDUCED PRESSURE BACKFLOW PREVENTER
BTU	BRITISH THERMAL UNIT
BTUH	BRITISH THERMAL UNIT PER HOUR
BV	BALL VALVE
C	CELSIUS
CI	CAST IRON
CFS	CUBIC FEET PER SECOND
CO	CLEANOUT
COR	CONTRACTING OFFICER'S REPRESENTATIVE
CS	CLINICAL SINK
CT	CURRENT TRANSFER
CTOG	CLEANOUT TO GRADE
CW	COLD WATER
CWFU	COLD WATER FIXTURE UNIT
DCW	DOMESTIC COLD WATER
DET	DOMESTIC EXPANSION TANK
DFU	DRAINAGE FIXTURE UNIT
DHW	DOMESTIC HOT WATER
DHWR	DOMESTIC HOT WATER RECIRCULATION
DN	DOWN
DOE	DEPARTMENT OF ENERGY
DS	DOWNSPOUT
DW	DISHWASHER
DWG	DRAWING
DWH	DOMESTIC WATER HEATER
DWS	DOMESTIC WATER SERVICE
DWV	DRAIN WASTE VENT
DSN	DOWN SPOUT NOZZLE
EL	ELEVATION
ESH	EMERGENCY SHOWER
ET	EXPANSION TANK
EWC	ELECTRIC WATER COOLER
EWH	ELECTRIC WATER HEATER
EWS	EYE WASH STATION
(E)	EXISTING
F	FAHRENHEIT
FCO	FLOOR CLEANOUT
FD	FLOOR DRAIN
FM	FLOW METER
FS	FLOOR SINK
FS	FLOW SWITCH
FU	FIXTURE UNITS
GPD	GALLONS PER DAY
GPH	GALLONS PER HOUR
GPM	GALLONS PER MINUTE
H&CW	HOT AND COLD WATER
HB	HOSE BIBB
HD	HUB DRAIN
HP	HORSEPOWER
HS	HAND SINK
HT	HEAT MAINTENANCE TAPE
HW	HOT WATER
HWCP	HOT WATER CIRCULATING PUMP
HWFU	HOT WATER FIXTURE UNIT
HZ	HERTZ
ICW	INDUSTRIAL COLD WATER
INV	INVERT
IRW	IRRIGATION WATER
IW	INDIRECT WASTE
KW	KILOWATT
L	LAVATORY
LBS	POUNDS
LAV	LAVATORY
M	METER
MAV	MANUAL AIR VENT
MH	MANHOLE
NC	NORMALLY CLOSED
NIC	NOT IN CONTRACT
NO	NORMALLY OPEN
NPW	NON POTABLE WATER
NTC	NOT TO SCALE
ORD	OVERFLOW ROOF DRAIN
PH	PHASE
P	PLUMBING
PD	PLUMBING DEMOLITION
PRV	PRESSURE REDUCING VALVE
PSI	POUNDS PER SQUARE INCH
PSIA	POUNDS PER SQUARE INCH ATMOSPHERE
PSIG	POUNDS PER SQUARE INCH GAUGE
RD	ROOF DRAIN
RDL	ROOF DRAIN LEADER
RL	ROOF LEADER
RWL	RAIN WATER LEADER
SAN	SANITARY SEWER
SD	STORM DRAIN
SOV	SHUT OFF VALVE
SP	SUMP PUMP
SQFT	SQUARE FEET
S/S	STOP/START
SVCI	SERVICE WEIGHT CAST IRON
SW	STORM WATER
TDH	TOTAL DYNAMIC HEAD
TMV	THERMOSTATIC MIXING VALVE
TP	TRAP PRIMER
TW	TEMPERED WATER
TYP	TYPICAL
UPC	UNIFORM PLUMBING CODE
V	VENT
VAC	VACUUM
VB	VACUUM BREAKER
VS	VENT STACK
VTR	VENT THROUGH ROOF
W	WASTE
WC	WATER CLOSET
WCO	WALL CLEANOUT
WH	WALL HYDRANT
WH	WATER HEATER
WHA	WATER HAMMER ARRESTER
WM	WATER METER
WS	WASTE STACK
WSFU	WATER SUPPLY FIXTURE UNIT
YCO	YARD CLEANOUT
YH	YARD HYDRANT

DRAWING SYMBOLS

2 / PL105	DETAIL NUMBER DRAWING NUMBER WHERE DRAWN
A / PL105	SECTION LETTER DRAWING NUMBER WHERE SHOWN
40A-P-3	BUILDING NO. WHERE EQUIPMENT IS LOCATED. EQUIPMENT ABBREVIATION (PUMP) PUMP NO.3 IN BUILDING NO.26 TYPICAL UNIT NO.
	POINT OF CONNECTION BETWEEN NEW AND EXISTING WORK
	LIMIT OF DEMOLITION
P-XXX	PLUMBING FIXURE NUMBER
DWV / X	SANITARY SEWER DWV WASTE/VENT STACK
DW / X	DOMESTIC WATER RISER
RWL / X	RAINWATER LEADER & OVERFLOW LEADER

GENERAL PLUMBING SYMBOLS

	DIRECTION OF PIPE PITCH (DOWN)
	DIRECTION OF FLOW
	ANCHOR
	REDUCER OR INCREASER
	ECCENTRIC REDUCER
	TOP CONNECTION, 45° OR 90°
	BOTTOM CONNECTION, 45° OR 90°
	SIDE CONNECTION
	CAPPED OUTLET
	RISE OR DROP IN PIPE
	UNION
	PIPE UP
	PIPE DOWN
	STRAINER
	THERMOMETER
	PRESSURE GAGE
FCO	FLOOR CLEAN OUT
	HOSE BIB - INTERIOR
	WALL HYDRANT - EXTERIOR
FD	FLOOR DRAIN
OSD	OPEN SITE DRAIN
RD	ROOF DRAIN
ORD	OVERFLOW ROOF DRAIN
WM	WATER METER
COTG	CLEANOUT TO GRADE
COP	CLEANOUT PLUG
WCO	WALL CLEANOUT
	CAPPED-OFF CONNECTION FOR FUTURE
	PUMP
	SHOCK ARRESTOR

PLUMBING PIPING SYMBOLS

	DOMESTIC COLD WATER, COLD WATER
	DOMESTIC HOT WATER, HOT WATER
	DOMESTIC HOW WATER RETURN, HOT WATER RETURN
D	DRAIN
ORD	OVERFLOW ROOF DRAIN
RWL	RAINWATER LEADER
SAN	SANITARY SEWER
SAN	SANITARY SEWER, BELOW GRADE
SD	STORM DRAIN
SD	STORM DRAIN, BELOW GRADE
	DOMESTIC WATER, BELOW GRADE
	EXISTING PIPING
	EXISTING PIPING TO BE REMOVED

PLUMBING VALVE SYMBOLS

	GATE VALVE
	GLOBE VALVE
	CHECK VALVE
	BUTTERFLY VALVE
	BALL VALVE
	PRESSURE REGULATING VALVE
	AUTOMATIC FLOW CONTROL VALVE
	PRESSURE RELIEF VALVE
	TEST PLUG (PRESSURE/TEMPERATURE)
AV	AUTOMATIC AIR VENT
	THERMOSTATIC MIXING VALVE
	DRAIN VALVE
	WYE STRAINER WITH BALL BALVE & THREADED CAPPED CONNECTION.
BPF	BACKFLOW PREVENTER

PLUMBING CONTROLS

AI	ANALOG INPUT TO DDC
AO	ANALOG OUTPUT TO DDC
DO	DIGITAL OUTPUT TO DDC
DI	DIGITAL INPUT TO DDC

GENERAL PLUMBING NOTES

A. ALL WORK AND MATERIALS PROVIDED FCTHIS PROJECT SHALL BE IN ACCORDANCE WITH DIVISION 22 SPECIFICATIONS.

B. CONTRACTOR SHALL PROVIDE COMPLETE LAYOUT DRAWINGS IN ACCORDANCE WITH DIVISION 22 SPECIFICATIONS. NO WORK SHALL PROCEED UNTIL ALL OF THE LAYOUT DRAWINGS HAVE BEEN APPROVED.

C. PROJECT PHASING: CONTRACTOR SHALL PHASE DEMOLITION AND NEW WORK IN ACCORDANCE WITH INFORMATION SHOWN ON PLUMBINSHEET PD-100 AND ARCHITECTURAL SHEET AD-100.

D. ALL WORK IN BLDG 40E SHALL BE COORDINATED & SCHEDULED WITH COR, NO EXCEPTIONS.

E. COORDINATE EXACT LOCATIONS AND ELEVATIONS OF ELECTRICAL DEVICES WITH DIVISION 26 CONTRACTOR.

F. CONTRACTOR SHALL COORDINATE EXACT LOCATION AND ELEVATION OF ALL SHEAR ALL PENETRATIONS WITH STRUCTURAL ENGINEER.

G. ALL DOMESTIC WATER BRANCH LINES SHALL BE PROVIDED WITH BALL VALVE SHUT-OFFS IN ACCESSIBLE LOCATIONS.

SHEET INDEX

PL001	PLUMBING SYMBOLS LISTS AND SHEET INDEX
PD100	BUILDING 8 DEMOLITION PLAN - PLUMBING
PL099	BELOW GRADE PLUMBING PLAN
PL100	BASEMENT LEVEL PLUMBING PLAN
PL101	LEVEL 1 PLUMBING PLAN
PL102	LEVEL 2 PLUMBING PLAN
PL150	ROOF PLUMBING PLAN
PL401	PARTIAL FLOOR PLANS - PLUMBING
PL402	PARTIAL FLOOR PLAN - PLUMBING
PL501	PLUMBING DETAILS
PL601	PLUMBING RISER DIAGRAMS
PL602	PLUMBING RISER DIAGRAMS
PL603	PLUMBING RISER DIAGRAMS
PL610	PLUMBING SCHEDULES

BID DOCUMENT
NOVEMBER/02/2015

Revisions	ISSUES	Date
	BID DOCUMENT	11/02/2015
	100% CONSTRUCTION DOCUMENT	1/26/2015
		12/30/14
	99% CONSTRUCTION DOCUMENT	12/17/14
	95% CONSTRUCTION DOCUMENT	10/13/14
	65% DESIGN DEVELOPMENT	6/27/14
	SCHEMATIC DESIGN	3/28/14

CONSULTANTS:

PROJECT 2013-0512
CONTACT John McMichael
INTERFACE ENGINEERING
100 SW Main Street
Suite 1600
Portland, OR 97204
TEL 503.382.2266
FAX 503.382.2262
www.interfaceengineering.com

EXP. 4/13/16 11/02/15

ARCHITECT/ENGINEERS:

KMA INC. ARCHITECTS
14410 SE Petrovitsky Rd. Suite 206
Renton, WA 98058
425-291-7078

Drawing Title
PLUMBING SYMBOLS LISTS AND SHEET INDEX

Approved: Project Director
Approver

Project Title
INTENSIVE OUTPATIENT MENTAL HEALTH AND EDUCATION BUILDING
SPOKANE VA MEDICAL CENTER
SPOKANE, WASHINGTON 99205

Location
SPOKANE, WASHINGTON 99205

Issue Date **11/02/2015** | Checked **JRM** | Drawn **IEI**

Project Number 668-313
Building Number 40A
Drawing Number **PL001**
Dwg. of

Office of Construction and Facilities Management
Department of Veterans Affairs

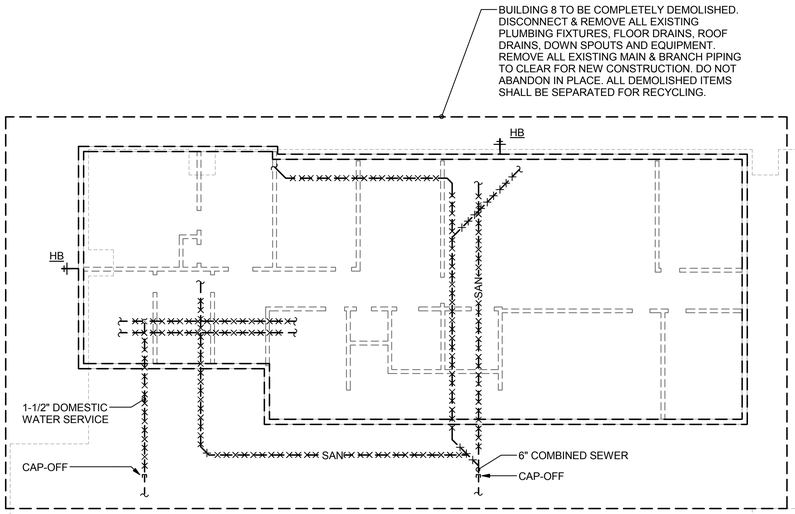

BUILDING 8

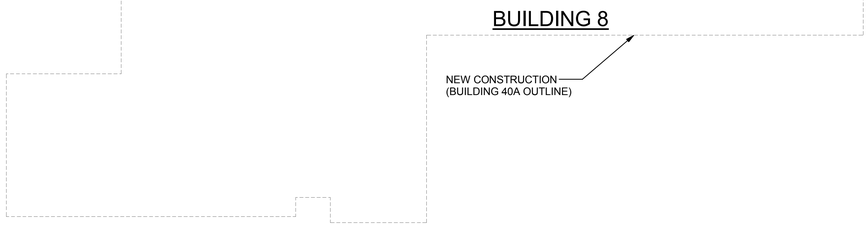

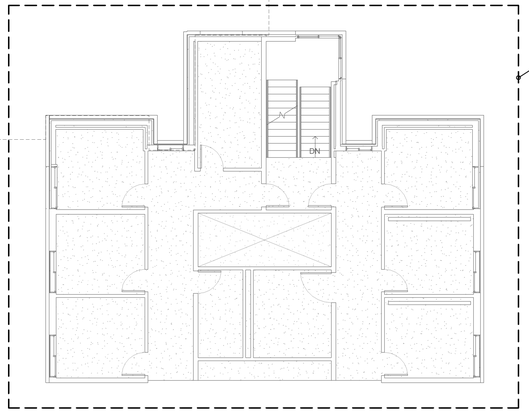

BUILDING 40

BUILDING 40 PLUMBING SYSTEMS TO REMAIN INTACT AND UNDISTURBED EXCEPT BASEMENT LEVEL MECHANICAL ROOM. REFER TO DRAWING PL401 AND PL402 FOR DETAILS.

TRUE NORTH

PLAN NORTH

1 BUILDING 8 DEMOLITION PLAN - PLUMBING

1/8" = 1'-0"

BID DOCUMENT
NOVEMBER/02/2015

Revisions	ISSUES	Date
	BID DOCUMENT	11/02/2015
	100% CONSTRUCTION DOCUMENT	1/26/2015
		12/30/14
	99% CONSTRUCTION DOCUMENT	12/17/14
	95% CONSTRUCTION DOCUMENT	10/13/14
	65% DESIGN DEVELOPMENT	6/27/14
	SCHEMATIC DESIGN	3/28/14

CONSULTANTS:

PROJECT 2013-0512
CONTACT John McMichael
INTERFACE ENGINEERING
100 SW Main Street
Suite 1600
Portland, OR 97204
TEL 503.382.2266
FAX 503.382.2262
www.interfaceengineering.com

JOHN R. McMICHAEL — STATE OF WASHINGTON — 22711 — REGISTERED PROFESSIONAL ENGINEER
EXP. 4/13/16 11/02/15

ARCHITECT/ENGINEERS:

SDVOSB
KMA INC. ARCHITECTS
14410 SE Petrovitsky Rd. Suite 206
Renton, WA 98058
425-291-7078

Drawing Title
BUILDING 8 DEMOLITION PLAN - PLUMBING

Approved: Project Director
Approver

Project Title
INTENSIVE OUTPATIENT MENTAL HEALTH AND EDUCATION BUILDING
SPOKANE VA MEDICAL CENTER
SPOKANE, WASHINGTON 99205

Location
SPOKANE, WASHINGTON 99205

Issue Date **11/02/2015** | Checked **JRM** | Drawn **IEI**

Project Number 668-313
Building Number 40A
Drawing Number **PD100**
Dwg. of

Office of Construction and Facilities Management
Department of Veterans Affairs

GENERAL SHEET NOTES

A. SANITARY SEWER MAIN SHALL RUN @ 1%. BRANCH LINES SHALL BE RUN @ 2%.

B. ALL FLOOR & OPEN SIZE DRAINS SHALL BE PRIMED.

C. FLOOR DRAINS IN MECHANICAL ROOM SHALL HAVE DEEP SEAL TRAPS.

SHEET KEYNOTES

1. FLOOR DRAIN STRAINER SHALL BE SET @ 1" BELOW FINISHED FLOOR ELEVATION. COORDINATION SLOPING OF CONCRETE WITH DIVISION 3 WORK.
2. VERIFY EXACT LOCATION OF EXISTING 6" SANITARY SEWER LATERAL FROM BLDG 40A. REMOVE EXISTING PIPING TO CLEAR FOR NEW CONSTRUCTION. DO NOT ABANDON IN PLACE. COORDINATE WITH CIVIL WORK TO PROVIDE TEMPORARY CONNECTION OF SANITARY SEWER DURING CONTRUCTION OF BUILDING 40A.
3. COORDINATE RE-ROUTING OF BUILDING 40E SANITARY SEWER WITH COR & FACILITIES MANAGER.

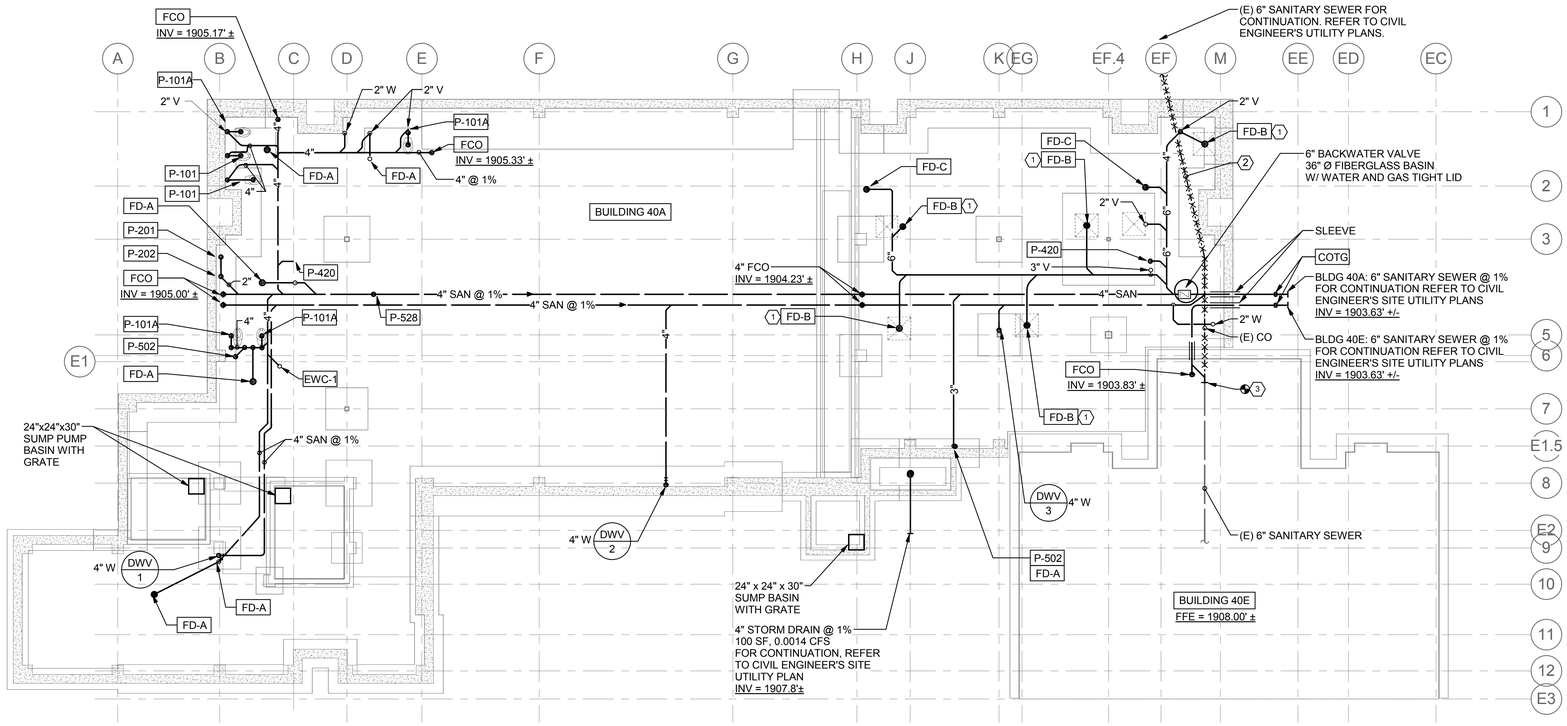

TRUE NORTH PLAN NORTH

1 BELOW GRADE PLUMBING PLAN
1/8" = 1'-0"

FFE = 1907' - 4"

BID DOCUMENT
NOVEMBER/02/2015

Revisions	ISSUES	Date
	BID DOCUMENT	11/02/2015
	100% CONSTRUCTION DOCUMENT	1/26/2015
		12/30/14
	99% CONSTRUCTION DOCUMENT	12/17/14
	95% CONSTRUCTION DOCUMENT	10/13/14
	65% DESIGN DEVELOPMENT	6/27/14
	SCHEMATIC DESIGN	3/28/14

CONSULTANTS:

PROJECT 2013-0512
CONTACT John McMichael
INTERFACE ENGINEERING
100 SW Main Street
Suite 1600
Portland, OR 97204
TEL 503.382.2266
FAX 503.382.2262
www.interfaceengineering.com

JOHN R. McMICHAEL — STATE OF WASHINGTON — 21751 — REGISTERED PROFESSIONAL ENGINEER
EXP. 4/13/16 11/02/15

ARCHITECT/ENGINEERS:

SDVOSB
KMA INC. ARCHITECTS
14410 SE Petrovitsky Rd. Suite 206
Renton, WA 98058
425-291-7078

Drawing Title
BELOW GRADE PLUMBING PLAN

Approved: Project Director
Approver

Project Title
INTENSIVE OUTPATIENT MENTAL HEALTH AND EDUCATION BUILDING
SPOKANE VA MEDICAL CENTER
SPOKANE, WASHINGTON 99205

Location
SPOKANE, WASHINGTON 99205

Issue Date **11/02/2015** | Checked **JRM** | Drawn **IEI**

Project Number 668-313
Building Number 40A
Drawing Number **PL099**
Dwg. of

Office of Construction and Facilities Management
Department of Veterans Affairs

DEDUCTIVE ALTERNATE BID AREA #1
CONSTRUCTION NOTES:

1. DELETE ALL PLUMBING FIXTURES AND DRAINS FROM SCOPE OF WORK EXCEPT P-801 WALL HYDRANTS. PROVIDE ALL WATER AND WASTE PIPING SERVING FLOORS ABOVE.
2. ROUGH-IN ONLY, FOR ALL PLUMBING FIXTURES AND DRAINS SHOWN IN ALTERNATE BID AREA #1.

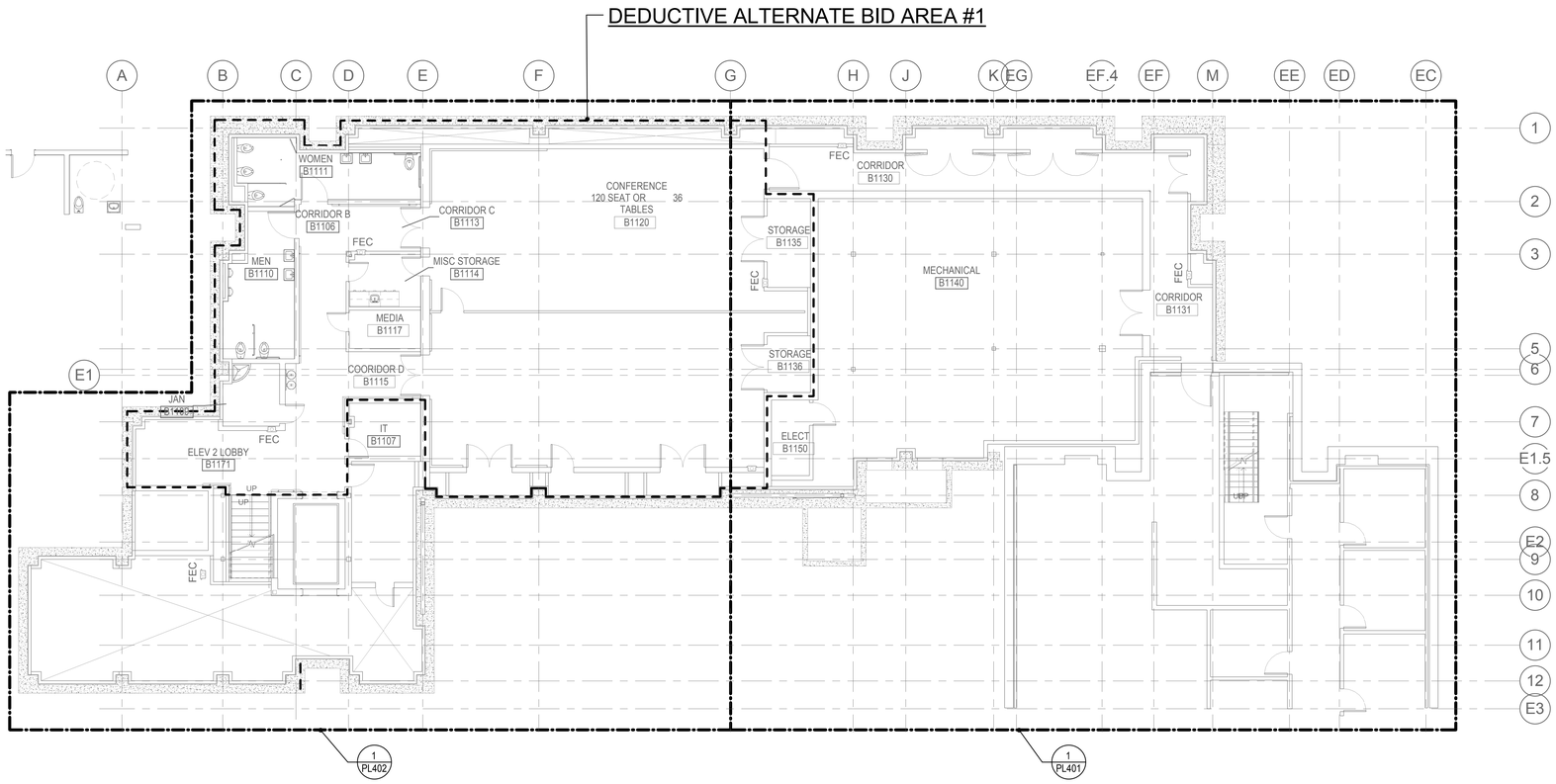

TRUE NORTH PLAN NORTH

1 BASEMENT PLAN - PLUMBING
1/8" = 1'-0"

FFE = 1908'-0"

BID DOCUMENT
NOVEMBER/02/2015

Revisions	ISSUES	Date
	BID DOCUMENT	11/02/2015
	100% CONSTRUCTION DOCUMENT	1/26/2015
		12/30/14
	99% CONSTRUCTION DOCUMENT	12/17/14
	95% CONSTRUCTION DOCUMENT	10/13/14
	65% DESIGN DEVELOPMENT	6/27/14
	SCHEMATIC DESIGN	3/28/14

CONSULTANTS:

PROJECT 2013-0512
CONTACT John McMichael
INTERFACE ENGINEERING
100 SW Main Street
Suite 1600
Portland, OR 97204
TEL 503.382.2266
FAX 503.382.2262
www.interfaceengineering.com

EXP. 4/13/16 11/02/15

ARCHITECT/ENGINEERS:

SDVOSB
KMA INC. ARCHITECTS
14410 SE Petrovitsky Rd. Suite 206
Renton, WA 98058
425-291-7078

Drawing Title
BASEMENT LEVEL PLUMBING PLAN

Approved: Project Director
Approver

Project Title
INTENSIVE OUTPATIENT MENTAL HEALTH AND EDUCATION BUILDING
SPOKANE VA MEDICAL CENTER
SPOKANE, WASHINGTON 99205

Location
SPOKANE, WASHINGTON 99205

Issue Date **11/02/2015** | Checked **JRM** | Drawn **IEI**

Project Number 668-313
Building Number 40A
Drawing Number **PL100**
Dwg. of

Office of Construction and Facilities Management
Department of Veterans Affairs

DEDUCTIVE ALTERNATE BID AREA #2
CONSTRUCTION NOTES:

1. DELETE ALL PLUMBING FIXTURES AND DRAINS FROM SCOPE OF WORK. PROVIDE ALL WATER AND WASTE PIPING SERVING FLOORS ABOVE.
2. ROUGH-IN ONLY, FOR ALL PLUMBING FIXTURES SHOWN IN ALTERNATE BID AREA #2.

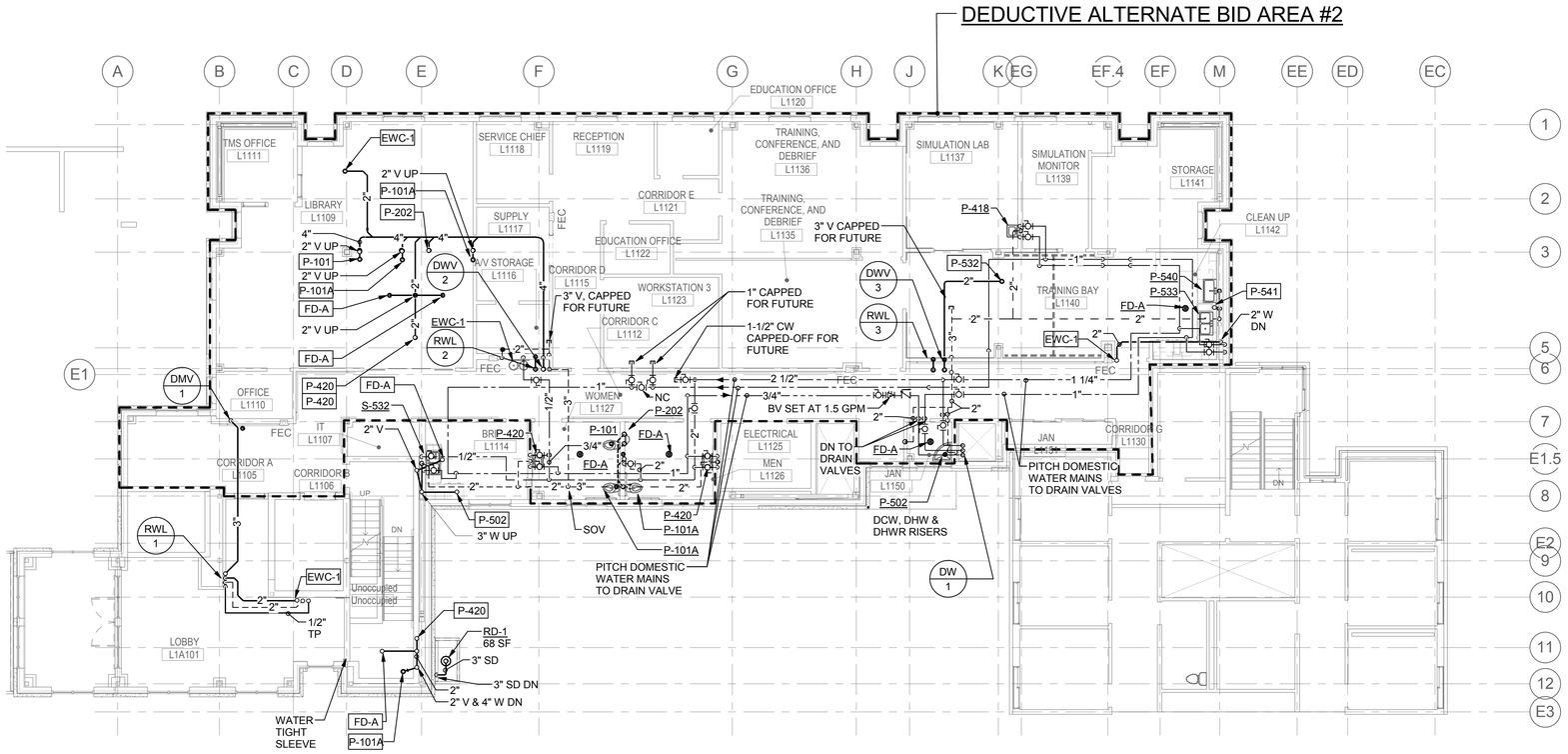

TRUE NORTH PLAN NORTH

1 LEVEL 1 PLAN - PLUMBING
1/8" = 1'-0"

FFE = 1922'-0"

BID DOCUMENT
NOVEMBER/02/2015

Revisions	ISSUES	Date
	BID DOCUMENT	11/02/2015
	100% CONSTRUCTION DOCUMENT	1/26/2015
		12/30/14
	99% CONSTRUCTION DOCUMENT	12/17/14
	95% CONSTRUCTION DOCUMENT	10/13/14
	65% DESIGN DEVELOPMENT	6/27/14
	SCHEMATIC DESIGN	3/28/14

CONSULTANTS:

PROJECT 2013-0512
CONTACT John McMichael
INTERFACE ENGINEERING
100 SW Main Street
Suite 1600
Portland, OR 97204
TEL 503.382.2266
FAX 503.382.2262
www.interfaceengineering.com

EXP. 4/13/16 11/02/15

ARCHITECT/ENGINEERS:

KMA INC. ARCHITECTS
14410 SE Petrovitsky Rd. Suite 206
Renton, WA 98058
425-291-7078

Drawing Title
LEVEL 1 PLUMBING PLAN

Approved: Project Director
Approver

Project Title
INTENSIVE OUTPATIENT MENTAL HEALTH AND EDUCATION BUILDING
SPOKANE VA MEDICAL CENTER
SPOKANE, WASHINGTON 99205

Location
SPOKANE, WASHINGTON 99205

Issue Date **11/02/2015** | Checked **JRM** | Drawn **IEI**

Project Number 668-313
Building Number 40A
Drawing Number **PL101**
Dwg. of

Office of Construction and Facilities Management
Department of Veterans Affairs

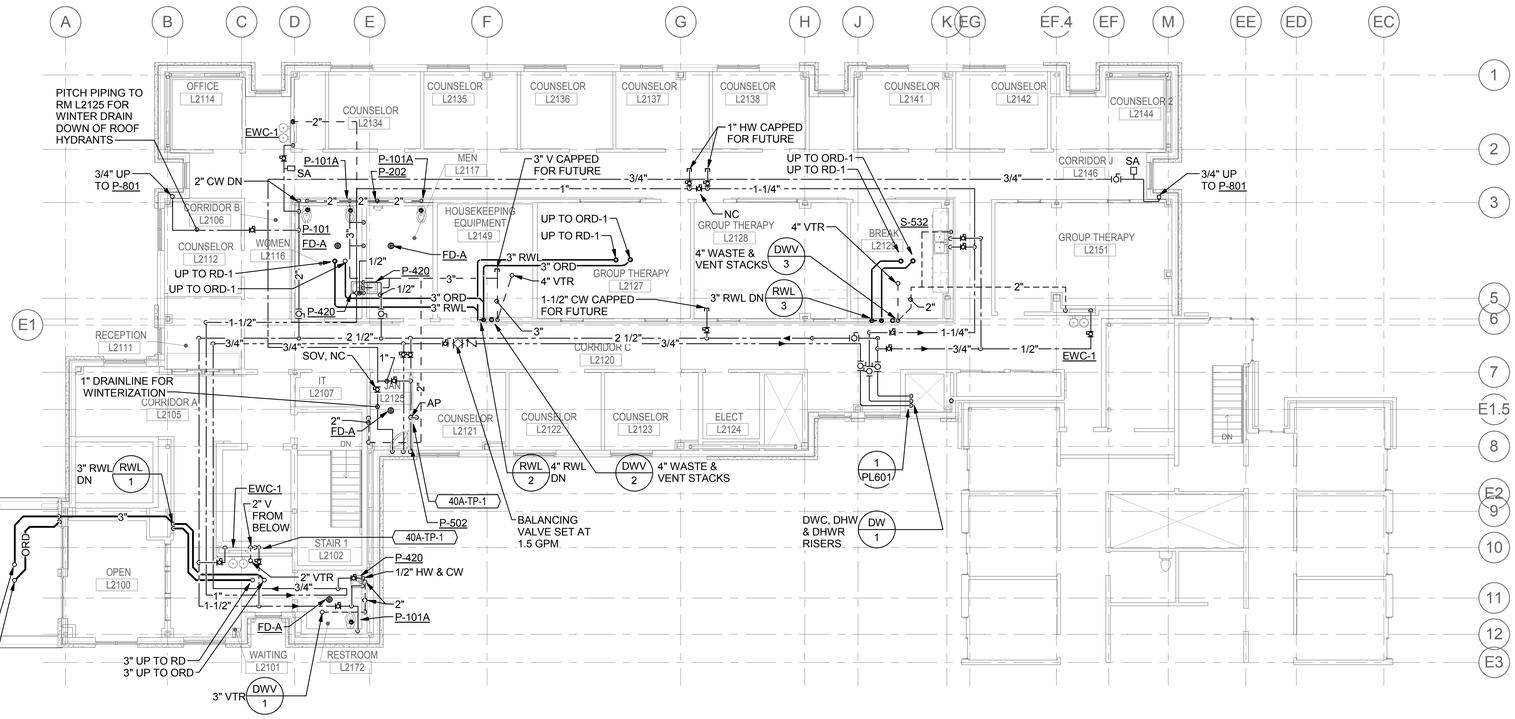

LEVEL 2 PLAN - PLUMBING

1/8" = 1'-0"

TRUE NORTH PLAN NORTH

FFE = 1936'-0"

BID DOCUMENT
NOVEMBER/02/2015

Revisions	ISSUES	Date
	BID DOCUMENT	11/02/2015
	100% CONSTRUCTION DOCUMENT	1/26/2015
		12/30/14
	99% CONSTRUCTION DOCUMENT	12/17/14
	95% CONSTRUCTION DOCUMENT	10/13/14
	65% DESIGN DEVELOPMENT	6/27/14
	SCHEMATIC DESIGN	3/28/14

CONSULTANTS:

PROJECT 2013-0512
CONTACT John McMichael
INTERFACE ENGINEERING
100 SW Main Street
Suite 1600
Portland, OR 97204
TEL 503.382.2266
FAX 503.382.2262
www.interfaceengineering.com

JOHN R. McMICHAEL STATE OF WASHINGTON 27113 PROFESSIONAL ENGINEER
EXP. 4/13/16 11/02/15

ARCHITECT/ENGINEERS:

SDVOSB
KMA INC. ARCHITECTS
14410 SE Petrovitsky Rd. Suite 206
Renton, WA 98058
425-291-7078

Drawing Title
LEVEL 2 PLUMBING PLAN

Approved: Project Director
Approver

Project Title
INTENSIVE OUTPATIENT MENTAL HEALTH AND EDUCATION BUILDING
SPOKANE VA MEDICAL CENTER
SPOKANE, WASHINGTON 99205

Location
SPOKANE, WASHINGTON 99205

Issue Date **11/02/2015** | Checked **JRM** | Drawn **IEI**

Project Number 668-313
Building Number 40A
Drawing Number **PL102**
Dwg. of

Office of Construction and Facilities Management
Department of Veterans Affairs

SHEET KEYNOTES

1 REFER TO ARCHITECTURAL DETAILS FOR FLASHING OF VTR'S AND INSTALLATION OF ROOF DRAINS IN ROOFING SYSTEM, TYPICAL

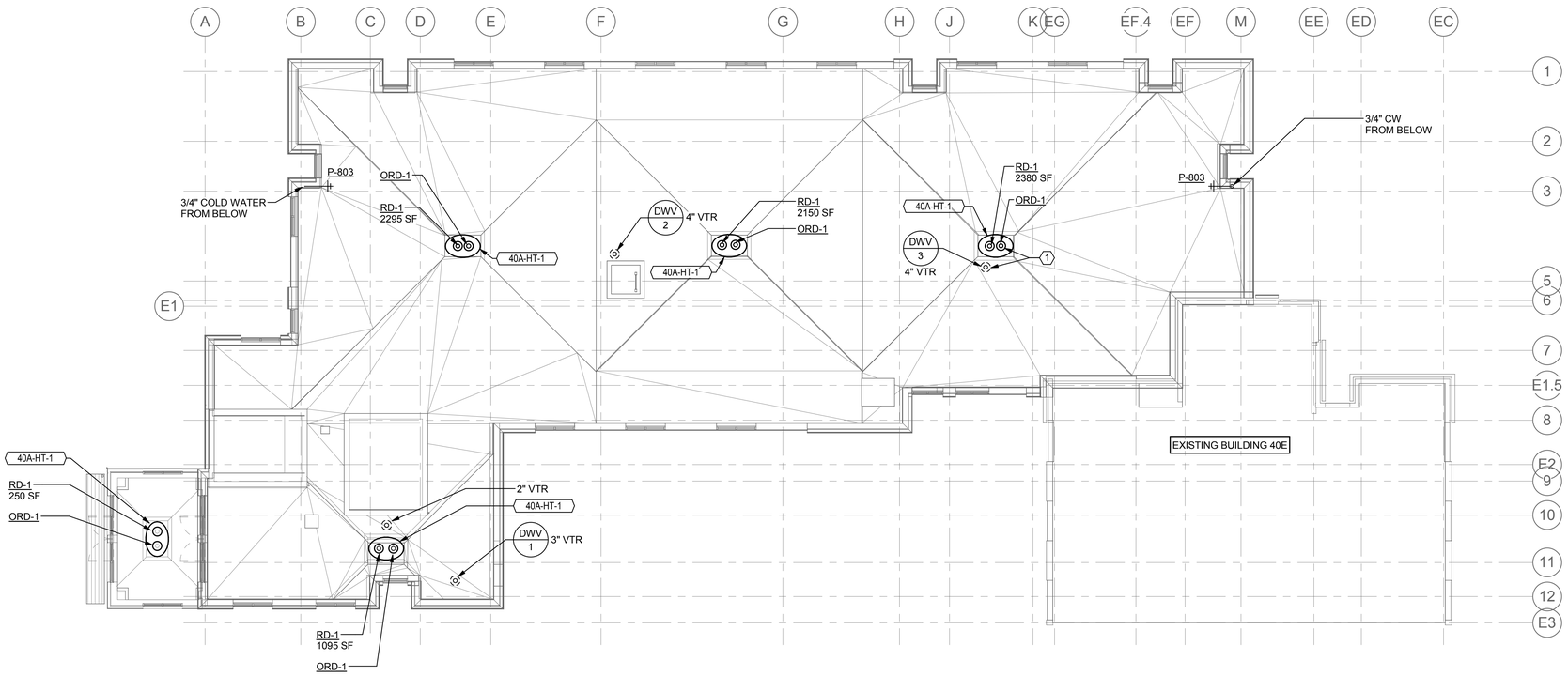

TRUE NORTH PLAN NORTH

1 ROOF PLAN - PLUMBING
1/8" = 1'-0"

FFE = 1949'-5"

BID DOCUMENT
NOVEMBER/02/2015

Revisions	ISSUES	Date
	BID DOCUMENT	11/02/2015
	100% CONSTRUCTION DOCUMENT	1/26/2015
		12/30/14
	99% CONSTRUCTION DOCUMENT	12/17/14
	95% CONSTRUCTION DOCUMENT	10/13/14
	65% DESIGN DEVELOPMENT	6/27/14
	SCHEMATIC DESIGN	3/28/14

CONSULTANTS:

PROJECT 2013-0512
CONTACT John McMichael
INTERFACE ENGINEERING
100 SW Main Street
Suite 1600
Portland, OR 97204
TEL 503.382.2266
FAX 503.382.2262
www.interfaceengineering.com

JOHN R. McMICHAEL STATE OF WASHINGTON 27113 PROFESSIONAL ENGINEER
EXP. 4/13/16 11/02/15

ARCHITECT/ENGINEERS:

SDVOSB
KMA INC. ARCHITECTS
14410 SE Petrovitsky Rd. Suite 206
Renton, WA 98058
425-291-7078

Drawing Title
ROOF PLUMBING PLAN

Approved: Project Director
Approver

Project Title
INTENSIVE OUTPATIENT MENTAL HEALTH AND EDUCATION BUILDING
SPOKANE VA MEDICAL CENTER
SPOKANE, WASHINGTON 99205

Location
SPOKANE, WASHINGTON 99205

Issue Date **11/02/2015** | Checked **JRM** | Drawn **IEI**

Project Number 668-313
Building Number 40A
Drawing Number **PL150**
Dwg. of

Office of Construction and Facilities Management
Department of Veterans Affairs

DEDUCTIVE ALTERNATE BID AREA #1

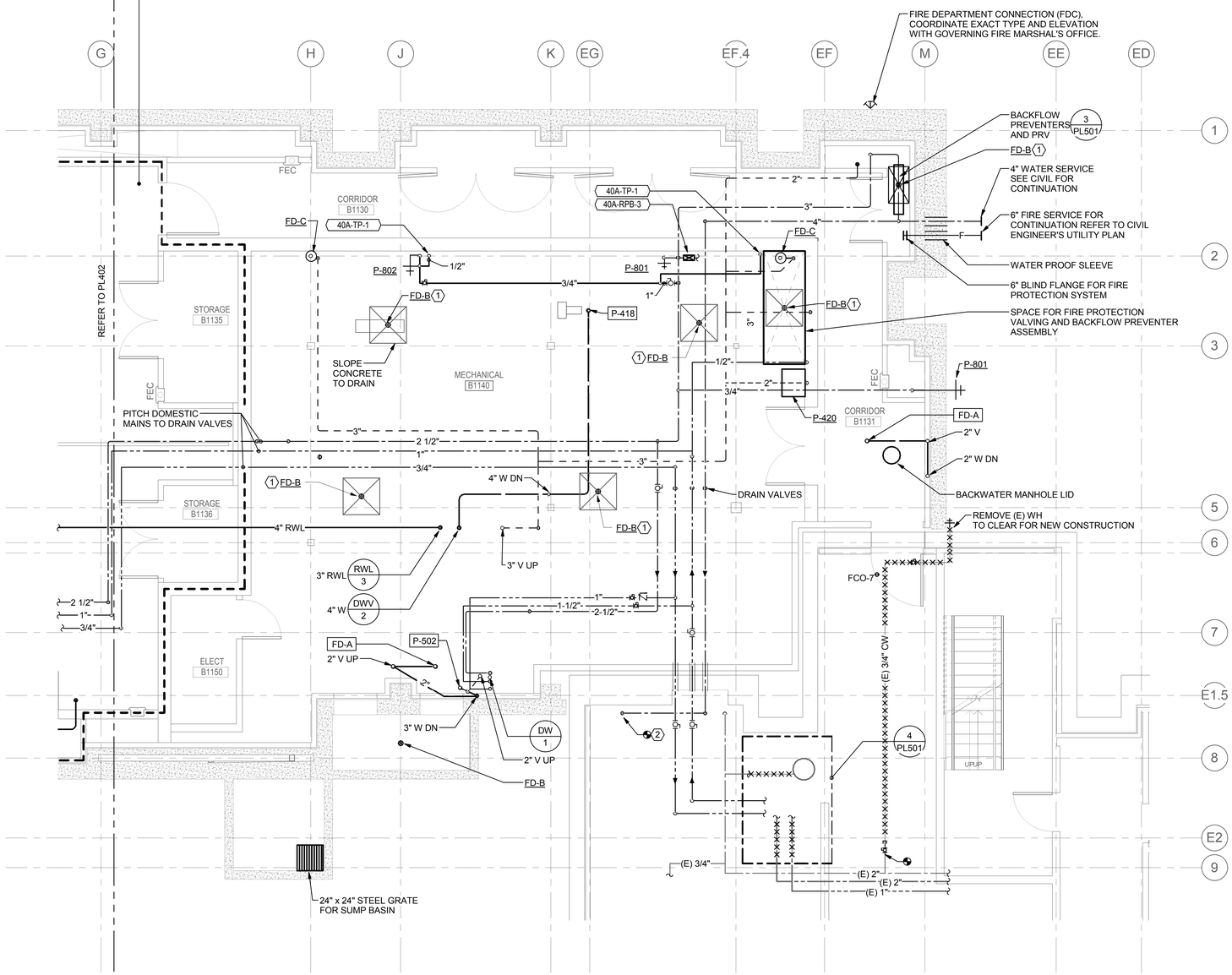

TRUE NORTH PLAN NORTH

1 PARTIAL BASEMENT PLAN - NORTH - PLUMBING
1/4" = 1'-0"

FFE = 1907' - 4"

GENERAL PLUMBING NOTES

A. MECHANICAL ROOM EQUIPMENT ACCESS WAY, REFER TO HVAC SHEET MH304.

SHEET KEYNOTES

1 INSTALL TOP OF DRAIN -1' BELOW FINISHED FLOOR SLAB. SLOPE CONCRETE TO DRAIN. COORDINATE WITH DIVISION 3 WORK.

2 DISCONNECT EXISTING 4" DOMESTIC WATER SERVICE TO BACKFLOW PREVENTOR AND CAP-OFF TO CLEAR FOR NEW CONSTRUCTION. CONNECT NEW 4" COLD WATER MAIN FROM BUILDING 40A TO EXISTING BACKFLOW PREVENTOR. PROVIDE A TEMPOARY COLD WATER FEED TO BUILDING 40 DURING BUILDING 40A CONSTRUCTION. BUILDING 40 TO REMAIN OPERATIONAL DURING BUILDING 40A CONSTRUCTION.

3 CONTRACTOR TO DISCONNECT, REMOVE AND REPLACE (E) PIPING TO DOMESTIC WATER AS SHOWN ON DETAIL 4/PL501.

DEDUCTIVE ALTERNATE BID AREA #1 CONSTRUCTION NOTES:

1. DELETE ALL PLUMBING FIXTURES AND DRAINS FROM SCOPE OF WORK EXCEPT P-801 WALL HYDRANTS.
2. ROUGH-IN FOR ALL PLUMBING FIXTURES AND DRAINS SHOWN IN ALTERNATE BID AREA #1.

BID DOCUMENT
NOVEMBER/02/2015

Revisions	ISSUES	Date
	BID DOCUMENT	11/02/2015
	100% CONSTRUCTION DOCUMENT	1/26/2015
		12/30/14
	99% CONSTRUCTION DOCUMENT	12/17/14
	95% CONSTRUCTION DOCUMENT	10/13/14
	65% DESIGN DEVELOPMENT	6/27/14
	SCHEMATIC DESIGN	3/28/14

CONSULTANTS:

PROJECT 2013-0512
CONTACT John McMichael
INTERFACE ENGINEERING
100 SW Main Street
Suite 1600
Portland, OR 97204
TEL 503.382.2266
FAX 503.382.2262
www.interfaceengineering.com

EXP. 4/13/16 11/02/15

ARCHITECT/ENGINEERS:

KMA INC. ARCHITECTS
14410 SE Petrovitsky Rd. Suite 206
Renton, WA 98058
425-291-7078

Drawing Title
PARTIAL FLOOR PLANS - PLUMBING

Approved: Project Director
Approver

Project Title
INTENSIVE OUTPATIENT MENTAL HEALTH AND EDUCATION BUILDING
SPOKANE VA MEDICAL CENTER
SPOKANE, WASHINGTON 99205

Location
SPOKANE, WASHINGTON 99205

Issue Date **11/02/2015** | Checked **JRM** | Drawn **IEI**

Project Number 668-313
Building Number 40A
Drawing Number **PL401**
Dwg. of

Office of Construction and Facilities Management
Department of Veterans Affairs

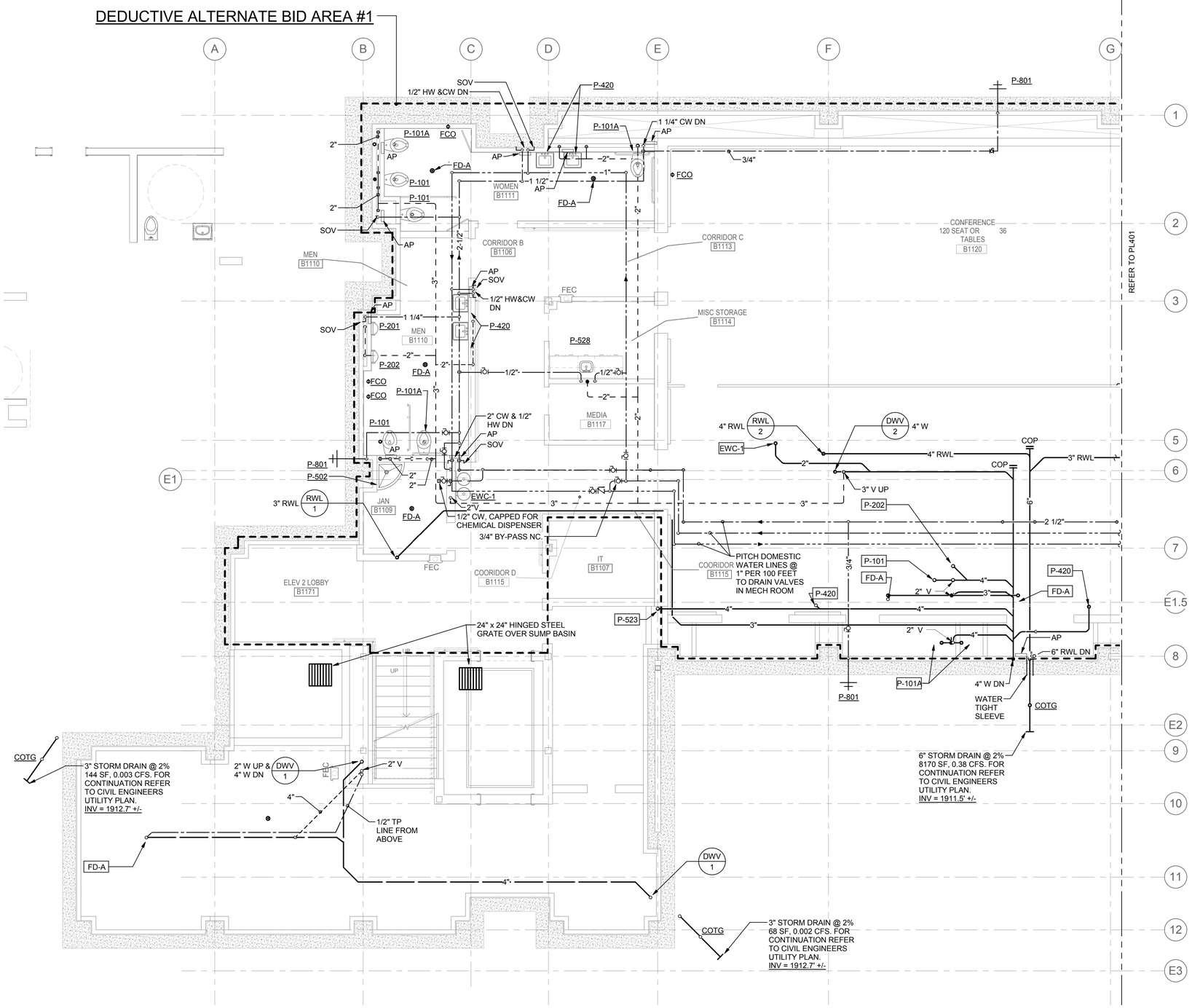

TRUE NORTH PLAN NORTH

1 PARTIAL BASEMENT PLAN - SOUTH - PLUMBING
1/4" = 1'-0"

GENERAL PLUMBING NOTES

A. ALL PIPING IN CONFERENCE ROOM B1120 AND BETWEEN GRIDS E/1 & H/1 AND E/8 & H/8 SHALL BE ACUSTICALLY WRAPPED WTIH KINETICS KNM-100ALQ OR EQUAL.

DEDUCTIVE ALTERNATE BID AREA #1 CONSTRUCTION NOTES:

1 DELETE ALL PLUMBING FIXTURES AND DRAINS FROM SCOPE OF WORK EXCEPT P-801 WALL HYDRANTS.

2 ROUGH-IN FOR ALL PLUMBING FIXTURES AND DRAINS SHOWN IN ALTERNATE BID AREA #1.

BID DOCUMENT
NOVEMBER/02/2015

Revisions	ISSUES	Date
	BID DOCUMENT	11/02/2015
	100% CONSTRUCTION DOCUMENT	1/26/2015
		12/30/14
	99% CONSTRUCTION DOCUMENT	12/17/14
	95% CONSTRUCTION DOCUMENT	10/13/14
	65% DESIGN DEVELOPMENT	6/27/14
	SCHEMATIC DESIGN	3/28/14

CONSULTANTS:

PROJECT 2013-0512
CONTACT John McMichael
INTERFACE ENGINEERING
100 SW Main Street
Suite 1600
Portland, OR 97204
TEL 503.382.2266
FAX 503.382.2262
www.interfaceengineering.com

EXP. 4/13/16 11/02/15

ARCHITECT/ENGINEERS:

KMA INC. ARCHITECTS
14410 SE Petrovitsky Rd. Suite 206
Renton, WA 98058
425-291-7078

Drawing Title
PARTIAL FLOOR PLAN - PLUMBING

Approved: Project Director
Approver

Project Title
INTENSIVE OUTPATIENT MENTAL HEALTH AND EDUCATION BUILDING
SPOKANE VA MEDICAL CENTER
SPOKANE, WASHINGTON 99205

Location
SPOKANE, WASHINGTON 99205

Issue Date **11/02/2015** | Checked **JRM** | Drawn **IEI**

Project Number 668-313
Building Number 40A
Drawing Number **PL402**
Dwg. of

Office of Construction and Facilities Management
Department of Veterans Affairs

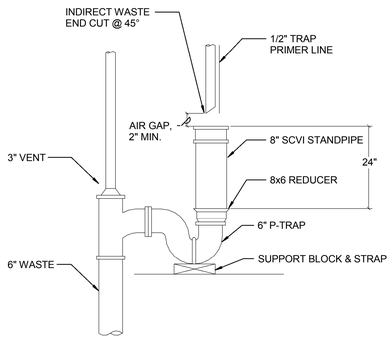

1 INDIRECT WASTE DRAIN FD-C
NO SCALE

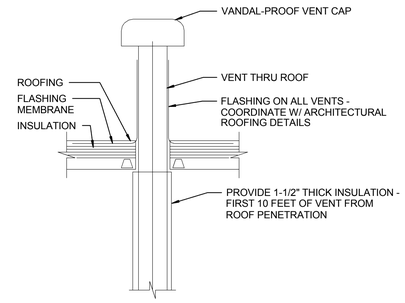

2 VENT TERMINAL PENETRATION DETAIL
NO SCALE

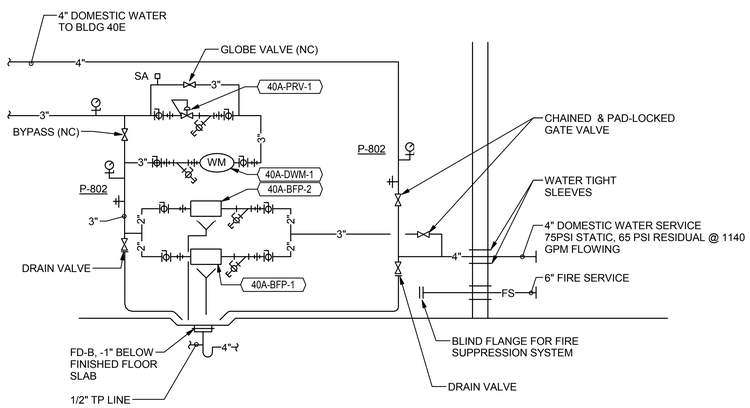

3 DOMESTIC WATER SERVICE HEADER
NO SCALE

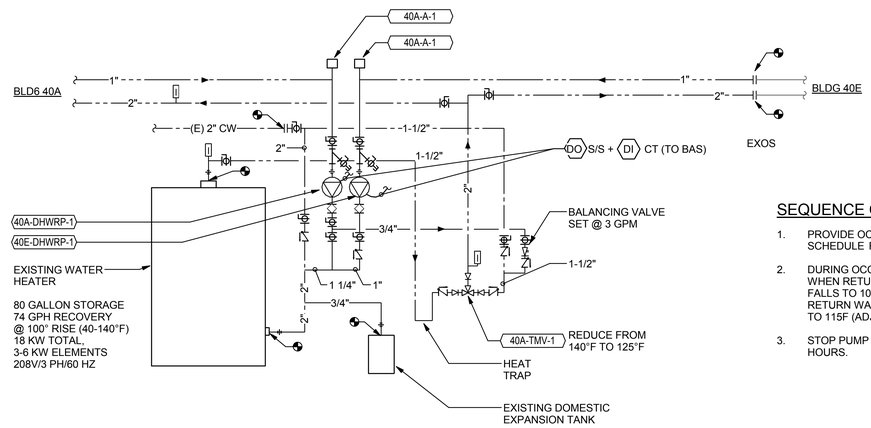

SEQUENCE OF OPERATION:

1. PROVIDE OCCUPIED/UNOCCUPIED SCHEDULE FOR RECIRCULATION PUMPS.
2. DURING OCCUPIED HOURS, START PUMP WHEN RETURN WATER TEMPERATURE FALLS TO 105F. STOP PUMP WHEN RETURN WATER TEMPERATURE RISES TO 115F (ADJUSTABLE).
3. STOP PUMP DURING UNOCCUPIED HOURS.

4 DOMESTIC WATER HEATER SYSTEM
NO SCALE

BID DOCUMENT
NOVEMBER/02/2015

Revisions	ISSUES	Date
	BID DOCUMENT	11/02/2015
	100% CONSTRUCTION DOCUMENT	1/26/2015
		12/30/14
	99% CONSTRUCTION DOCUMENT	12/17/14
	95% CONSTRUCTION DOCUMENT	10/13/14
	65% DESIGN DEVELOPMENT	6/27/14
	SCHEMATIC DESIGN	3/28/14

CONSULTANTS:

PROJECT 2013-0512
CONTACT John McMichael
INTERFACE ENGINEERING
100 SW Main Street
Suite 1600
Portland, OR 97204
TEL 503.382.2266
FAX 503.382.2262
www.interfaceengineering.com

EXP. 4/13/16 11/02/15

ARCHITECT/ENGINEERS:

KMA INC. ARCHITECTS
14410 SE Petrovitsky Rd. Suite 206
Renton, WA 98058
425-291-7078

Drawing Title
PLUMBING DETAILS

Approved: Project Director
Approver

Project Title
INTENSIVE OUTPATIENT MENTAL HEALTH AND EDUCATION BUILDING
SPOKANE VA MEDICAL CENTER
SPOKANE, WASHINGTON 99205

Location
SPOKANE, WASHINGTON 99205

Issue Date **11/02/2015** | Checked **JRM** | Drawn **IEI**

Project Number 668-313
Building Number 40A
Drawing Number **PL501**
Dwg. of

Office of Construction and Facilities Management
Department of Veterans Affairs

GENERAL SHEET NOTES

A PITCH ALL PIPING MAINS AT 1" PER 100 TOWARD DRAIN VALVES IN JANITOR'S CLOSET OR MECHANICAL ROOMS. NO TRAPPED LINES PERMITTED IN DOMESTIC WATER PIPING.

B PROVIDE SHOCK ARRESTORS WITH ACCESS PANELS.

SHEET KEYNOTES

1 PIPING MAINS SHALL BE PITCHED AT 1" PER 100 FEET TOWARD DRAIN VALVES - OVER P=502 IN ROOM L2125.

2 PITCH PIPING AT 1" PER 100 FEET TOWARD DRAIN VALVES OVER P-502 IN ROOM L1150.

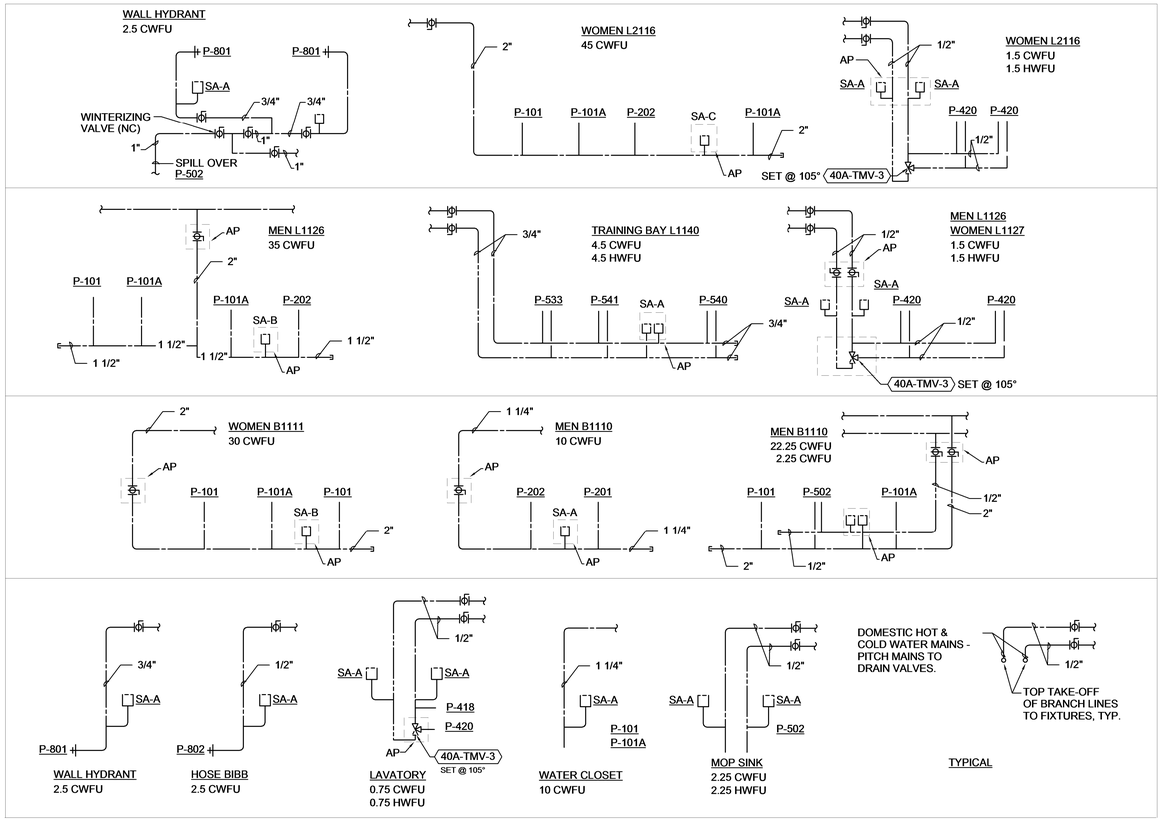

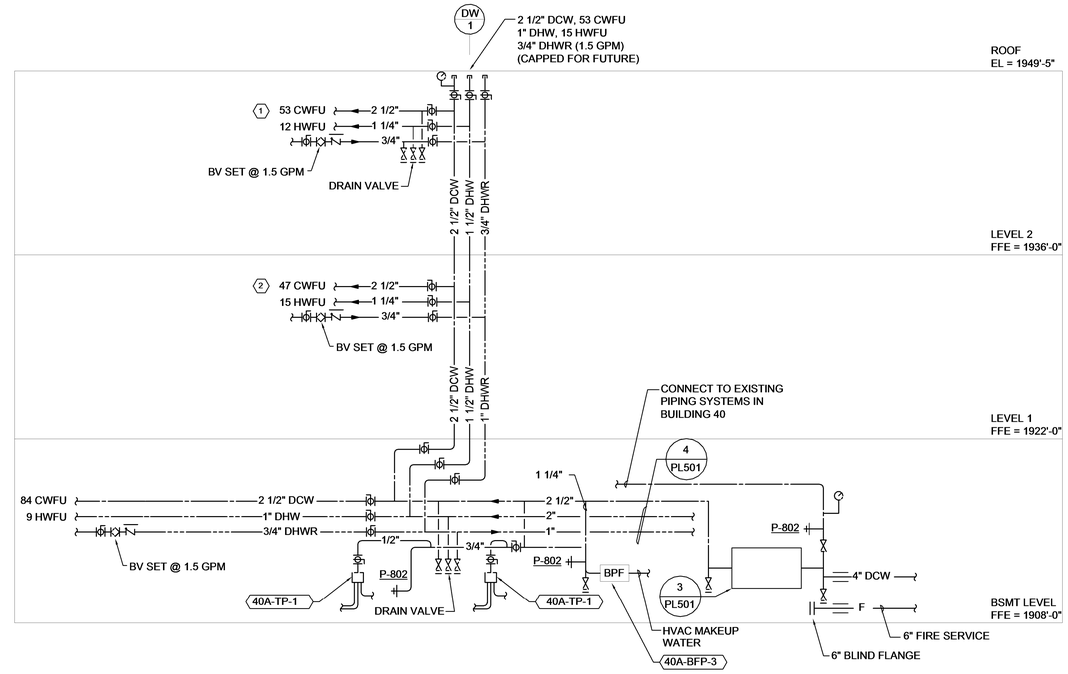

1 DOMESTIC WATER RISER DIAGRAM
NO SCALE

BID DOCUMENT
NOVEMBER/02/2015

Revisions	ISSUES	Date
	BID DOCUMENT	11/02/2015
	100% CONSTRUCTION DOCUMENT	1/26/2015
		12/30/14
	99% CONSTRUCTION DOCUMENT	12/17/14
	95% CONSTRUCTION DOCUMENT	10/13/14
	65% DESIGN DEVELOPMENT	6/27/14
	SCHEMATIC DESIGN	3/28/14

CONSULTANTS:

PROJECT 2013-0512
CONTACT John McMichael
INTERFACE ENGINEERING
100 SW Main Street
Suite 1600
Portland, OR 97204
TEL 503.382.2266
FAX 503.382.2262
www.interfaceengineering.com

JOHN R. McMICHAEL — STATE OF WASHINGTON — 14416 — REGISTERED PROFESSIONAL ENGINEER
EXP. 4/13/16 11/02/15

ARCHITECT/ENGINEERS:

SDVOSB
KMA INC. ARCHITECTS
14410 SE Petrovitsky Rd. Suite 206
Renton, WA 98058
425-291-7078

Drawing Title
PLUMBING RISER DIAGRAMS

Approved: Project Director
Approver

Project Title
INTENSIVE OUTPATIENT MENTAL HEALTH AND EDUCATION BUILDING
SPOKANE VA MEDICAL CENTER
SPOKANE, WASHINGTON 99205

Location
SPOKANE, WASHINGTON 99205

Issue Date **11/02/2015** | Checked **JRM** | Drawn **IEI**

Project Number 668-313
Building Number 40
Drawing Number **PL601**
Dwg. of

Office of Construction and Facilities Management
Department of Veterans Affairs

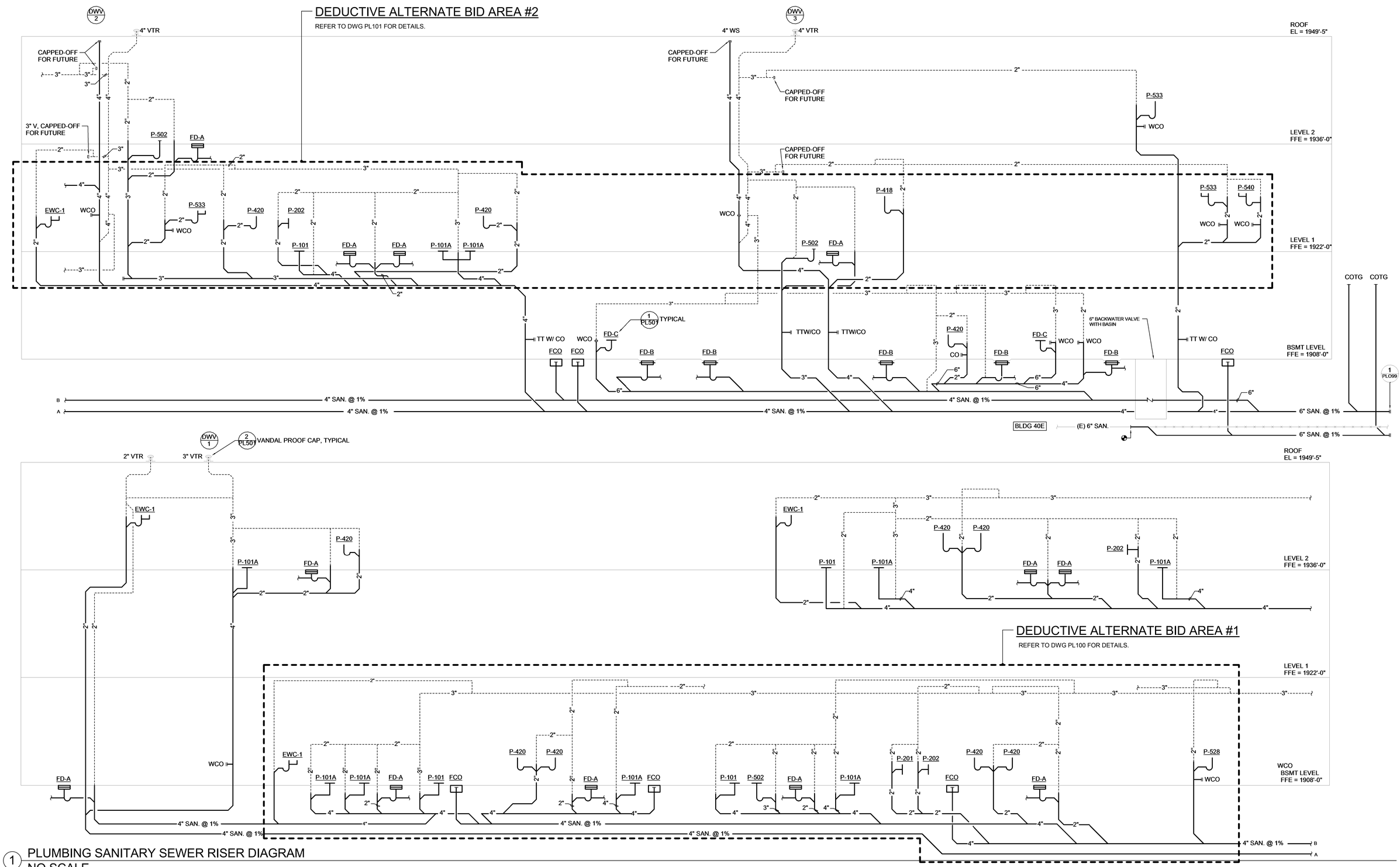

1 PLUMBING SANITARY SEWER RISER DIAGRAM
NO SCALE

BID DOCUMENT
NOVEMBER/02/2015

Revisions	ISSUES	Date
	BID DOCUMENT	11/02/2015
	100% CONSTRUCTION DOCUMENT	1/26/2015
		12/30/14
	99% CONSTRUCTION DOCUMENT	12/17/14
	95% CONSTRUCTION DOCUMENT	10/13/14
	65% DESIGN DEVELOPMENT	6/27/14
	SCHEMATIC DESIGN	3/28/14

CONSULTANTS:

PROJECT 2013-0512
CONTACT John McMichael
INTERFACE ENGINEERING
100 SW Main Street
Suite 1600
Portland, OR 97204
TEL 503.382.2266
FAX 503.382.2262
www.interfaceengineering.com

EXP. 4/13/16 11/02/15

ARCHITECT/ENGINEERS:

KMA INC. ARCHITECTS
14410 SE Petrovitsky Rd. Suite 206
Renton, WA 98058
425-291-7078

Drawing Title
PLUMBING RISER DIAGRAMS

Approved: Project Director
APPROVER

Project Title
INTENSIVE OUTPATIENT MENTAL HEALTH AND EDUCATION BUILDING
SPOKANE VA MEDICAL CENTER
SPOKANE, WASHINGTON 99205

Location
SPOKANE, WASHINGTON 99205

Issue Date **11/02/2015** | Checked **JRM** | Drawn **IEI**

Project Number 668-313
Building Number 40A
Drawing Number **PL602**
Dwg. of

Office of Construction and Facilities Management
Department of Veterans Affairs

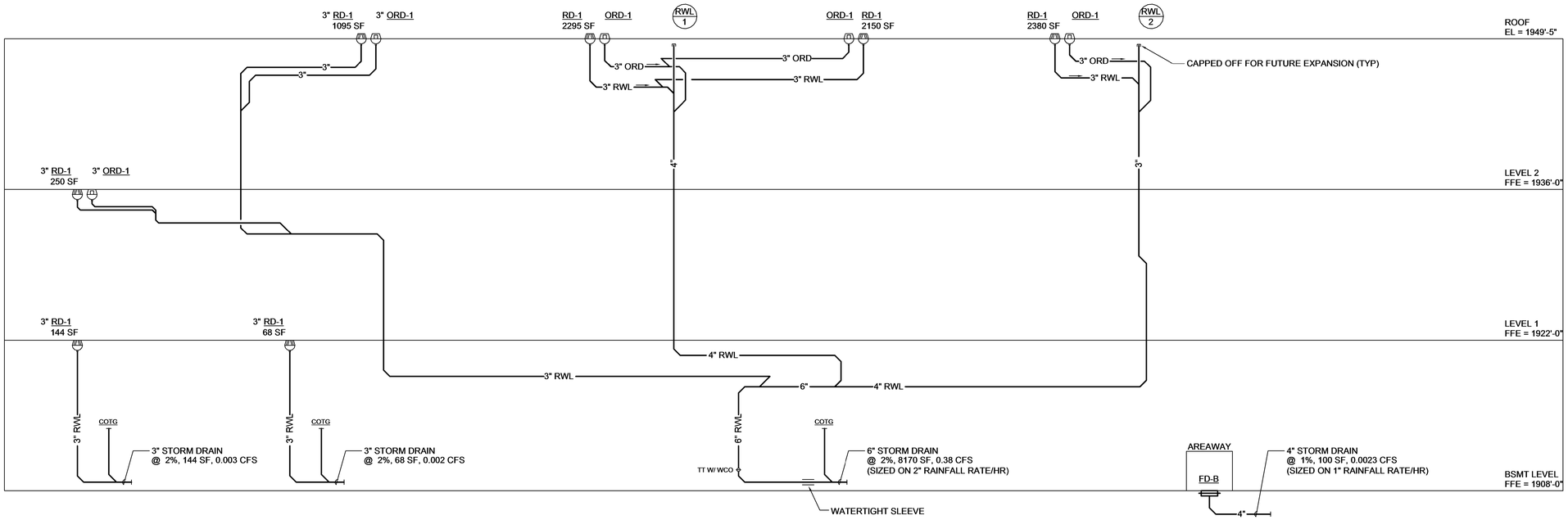

1 STORM DRAIN SEWER RISER DIAGRAM
NO SCALE

GENERAL SHEET NOTES

1. INSULATE ALL HORIZONTAL RWL & ORD LINES. DO NOT INSULATE VERTICAL LEADERS.

BID DOCUMENT
NOVEMBER/02/2015

Revisions	ISSUES	Date
	BID DOCUMENT	11/02/2015
	100% CONSTRUCTION DOCUMENT	1/26/2015
		12/30/14
	99% CONSTRUCTION DOCUMENT	12/17/14
	95% CONSTRUCTION DOCUMENT	10/13/14
	65% DESIGN DEVELOPMENT	6/27/14
	SCHEMATIC DESIGN	3/28/14

CONSULTANTS:

PROJECT 2013-0512
CONTACT John McMichael
INTERFACE ENGINEERING
100 SW Main Street
Suite 1600
Portland, OR 97204
TEL 503.382.2266
FAX 503.382.2262
www.interfaceengineering.com

EXP. 4/13/16 11/02/15

ARCHITECT/ENGINEERS:

KMA INC. ARCHITECTS
14410 SE Petrovitsky Rd. Suite 206
Renton, WA 98058
425-291-7078

Drawing Title
PLUMBING RISER DIAGRAMS

Approved: Project Director
Approver

Project Title
INTENSIVE OUTPATIENT MENTAL HEALTH AND EDUCATION BUILDING
SPOKANE VA MEDICAL CENTER
SPOKANE, WASHINGTON 99205

Location
SPOKANE, WASHINGTON 99205

Issue Date **11/02/2015** | Checked **JRM** | Drawn **IEI**

Project Number 668-313
Building Number 40A
Drawing Number **PL603**
Dwg. of

Office of Construction and Facilities Management
Department of Veterans Affairs

PLUMBING PUMP SCHEDULE

MARK	DESCRIPTION	SYSTEM	BASIS OF DESIGN: MANUFACTERER	BASIS OF DESIGN: MODEL	FLOW RATE (GPM)	HEAD (FT)	RPM	ELECTRICAL: VOLTS	ELECTRICAL: PH	ELECTRICAL: AMPS	ELECTRICAL: HP	WEIGHT (LBS)
40A-DHWRP-1	DOMESTIC HOT WATER RECIRCULATION PUMP	DOMESTIC WATER HEATING SYSTEM	BELL & GOSSETT	PL-36B	7	28	3300	120	1	2.1	1/6	14
40E-DHWRP-1	DOMESTIC HOT WATER RECIRCULATION PUMP	EXISTING DOMESTIC WATER HEATING SYSTEM	BELL & GOSSETT	PL-45B	5	22	3300	120	1	2.1	1/6	14

NOTES:
1 PROVIDE WYE STRAINERS WITH THREADED END BALL VALVE WITH CAP AND CHAIN MOUNTED ON SUCTION SIDE OF PUMP.

PLUMBING BACKFLOW PREVENTER SCHEDULE

MARK	DECRIPTION	SYSTEM	CAPACITIES	BASIS OF DESIGN: MANUFACTURER	BASIS OF DESIGN: MODEL	DCW	WEIGHT (LBS)
40A-BFP-1	REDUCED PRESSURE ZONE BACKFLOW PREVENTER	DOMESTIC WATER SERVICE	75 GPM @ 15 PSI DROP.	WILKINS	975-U-S-AG	2"	16
40A-BFP-2	REDUCED PRESSURE ZONE BACKFLOW PREVENTER	DOMESTIC WATER SERVICE	75 GPM @ 15 PSI DROP.	WILKINS	975-U-S-AG	2"	16
40A-BFP-3	REDUCED PRESSURE ZONE BACKFLOW PREVENTER	HVAC MAKE-UP WATER	20 GPM @ 15 PSI DROP.	WILKINS	975XL2U-S-AG	3/4"	15

NOTES:
1 PROVIDE WYE STRAINER WITH THREADED END BALL VALVE WITH CAP & CHAIN ON SUCTION SIDE OF BACKFLOW PREVENTER ASSEMBLY AND UNION TYPE BALL VALVES ON BOTH SIDES OF BACKFLOW PREVENTER ASSEMBLY.

PLUMBING DEVICES SCHEDULE

MARK	DESCRIPTION	SYSTEM	CAPACITIES	BASIS OF DESIGN: MANUFACTURER	BASIS OF DESIGN: MODEL	CONNECTION: DCW	CONNECTION: DHW	CONNECTION: TW	WEIGHT (LBS)
40A-TP-1	TRAP PRIMER	DOMESTIC COLD WATER		PPP	PR-500 PRIME RITE	1/2"			10
40A- DWM-1	DOMESTIC WATER METER	DOMESTIC COLD WATER	126 GPM PEAK LOAD	NEPTUNE	HP TURBINE METER				
40A-TMV-1	THERMOSTATIC MIXING VALVE - MASTER	DOMESTIC HOT WATER	35 GPM @ 15 PSI DROP. SET AT 125 F	LEONARD	LV-982-LF-RF-BD7	1"	1"	1-1/4"	25
40A-TMV-2	EMERGENCY EYE WASH MIXING VALVE	DOMESTIC HOT WATER	5 GPM @ 18 PSI DROP. SET AT 85 F	LAWLER	911EF	1/2"	1/2"	1/2"	15
40A-TMV-3	THEMOSTATIC MIXING VALVE WITH CHECK MODULES - LAVATORIES	DOMESTIC HOT WATER	1 GPM @ 2 PSI DROP. SET AT 105 F	LAWLER	570	1/2"	1/2"	1/2"	2
40A-PRV-1	PRESSURE REDUCING VALVE STATION	DOMESTIC COLD WATER	80 GPM @ 10 PSI LOSS, 95 PSI STATIC, SET UNIT @ 65 PSI DISCHARGE	WILKINS	500XLHTSTSC	2"			10
40A-PRV-2	PRESSURE REDUCING VALVE STATION	DOMESTIC COLD WATER	40 GPM @ 10 PSI LOSS, 95 PSI STATIC, SET UNIT @ 76 PSI DISCHARGE	WILKINS	500XLHTSTSC	1-1/4"			5

PLUMBING ELECTRICAL DEVICES SCHEDULE

MARK	DESCRIPTION	SYSTEM	BASIS OF DESIGN: MANUFACTURER	BASIS OF DESIGN: MODEL	CAPACITIES	ELECTRICAL: VOLTS	ELECTRICAL: PH	ELECTRICAL: AMPS	ELECTRICAL: HZ	WEIGHT (LBS)
EWC-1	ELECTRIC WATER COOLER	PLUMBING FIXTURE	SEE PLUMBING FIXTURE SPECIFICATION	SEE PLUMBING FIXTURE SPECIFICATION	8 GPH OF 50 F CHILLED WATER	120	1	5	60	175
P-101, P-101A, P-201 & P-202	ELECTRIC FLUSH VALVES	PLUMBING FIXTURE	SEE PLUMBING FIXTURE SPECIFICATION	SEE PLUMBING FIXTURE SPECIFICATION	1 TRANSFORMER PER 2 FLUSH VALVES	24	1			5
S-532	SINK	HW DISPENSER	SEE PLUMBING FIXTURE SPECIFICATION	SEE PLUMBING FIXTURE SPECIFICATION		120	1	6.25	60	15
40A-A-1	AQUASTAT	DOMESTIC WATER HEATING SYSTEM	HONEYWELL	L6006C1018	65 TO 200 F, SET AT 118 F	120	1	8	60	5
40A-HT-1	HEAT MAINTENANCE TAPE	ROOF DRAIN SYSTEM	RAYCHEM	ICE-STOP	30 FEET OF CABLE, 12W/FT2	120	1		60	15

NOTES:
1 COORDINATE EXACT LOCATION AND ELEVATION OF ELECTRICAL DEVICE WITH DIVISION 26 WORK.

DOMESTIC WATER SERVICE CALCULATIONS

FIXTURE QUANTITY	DESCRIPTION	UNIT FIXTURE: DWS WSFU	UNIT FIXTURE: DCW CWFU	UNIT FIXTURE: DHW HWFU	TOTAL FIXTURE UNITS: DWS WSFU	TOTAL FIXTURE UNITS: COLD CWFU	TOTAL FIXTURE UNITS: HOT HWFU
17	WATER CLOSET, FV, 1.28 GPF	10.00	10.00		170.00	170.00	
7	URINAL, FV, 0.125 GPF	5.00	5.00		35.00	35.00	
15	LAVATORY/HANDSINKS	1.00	0.75	0.75	15.00	11.25	11.25
10	SINK	2.00	1.50	1.50	20.00	15.00	15.00
1	SINK - STAFF	2.00	1.50	1.50	2.00	1.50	1.50
4	SERVICE SINK OR MOP BASIN (COUNT 1)	3.00	2.25	2.25	3.00	2.25	2.25
7	DRINKING FOUNTAIN OR WATER COOLER	0.50	0.50		3.50	3.50	
1	EMERGENCY EYE WASH	5.00	3.75	3.75	5.00	3.75	3.75
10	HOSE BIBB/WALL HYDRANTS	2.50	2.50		25.00	25.00	
1	HVAC MAKE-UP	20.00	20.00		20.00	20.00	
1	IRRIGATION MAKE-UP	20.00	20.00		20.00	20.00	
1	EXISTING BLDG 40E	180.00	180.00		180.00	180.00	45.00
				TOTAL	499	487	79
				FLOW-GPM	137	136	38
				MAIN SIZE	4"	3"	1-1/2"

SANITARY SEWER DWV CALCULATIONS

QTY	DESCRIPTION	GENERAL	TOTAL FIXTURE UNITS
17	WATER CLOSET, 1.128 GPF FLUSHOMETER VALVE	6.00	102.00
5	URINALS, 0.125 GPF FLUSH VALVE	2.00	10.00
15	LAVATORY/HAND SINKS	1.00	15.00
10	SINK, CRS	3.00	30.00
1	SINK, STAFF	3.00	3.00
4	SERVICE SINK OR MOP BASIN, 3" TRAP	3.00	12.00
			0.00
6	DUAL UNIT BARRIER FREE ELECTRIC WATER COOLER	0.50	3.00
16	FINISHED AREA FLOOR DRAIN A - 2"	2.00	32.00
4	UNFINISHED AREA/MECH RM FLOOR DRAIN B - 4"	6.00	24.00
2	HUB DRAIN - 6"	6.00	12.00
		TOTAL	243.00
		PIPE SIZE	6"
		CFS	22.00

PLUMBING FIXTURE SCHEDULE

MARK	DESCRIPTION	SPECIFICATION	CONNECTION (") W	V	DCW	DHW	SD
P-101	WATER CLOSET, FLUSH VALVE, BARRIER FREE	TOTO CT705ELNG -01 FLOOR SET FIXTURE WITH SLOAN 111-1.28-ES-S-TMO-EL 154 ELECTRONIC 24 VOLT/60HZ FLUSH VALVE & BEMIS 2155SSC-000 ANTI-MICROBIAL SEAT	4	2	1 1/4	-	-
P-101A	WATER CLOSET, FLUSH VALVE, BARRIER FREE WITH TRAP PRIMER	TOTO CT705ELNG -01 FLOOR SET FIXTURE WITH SLOAN 111-1.28-ES-S-TMO-TP-EL 154 ELECTRONIC 24 VOLT/60HZ FLUSH VALVE WITH TRAP PRIMER ASSEMBLY & BEMIS 2155SSC-000 ANTI-MICROBIAL SEAT FITTING	4	2	1 1/4	-	-
P201	URINAL, FLUSH VALVE	TOTO UT447EV WALL HUNG FIXTURE WITH SLOAN 186-0.5ES-S TMO, EL-154 ELECTRONIC 24 VOLT/60HZ FLUSH VALVE AND ZURN CARRIER FITTING	2	2	3/4	-	-
P202	URINAL, FLUSH VALVE, BARRIER FREE	TOTO UT447EV WALL HUNG FIXTURE WITH SLOAN 186-0.5ES-S TMO, EL-154 ELECTRONIC 24 VOLT/60HZ FLUSH VALVE AND ZURN CARRIER FITTING	2	2	3/4	-	-
P-418	LAVATORY, BARRIER FREE	TOTO LT307.4 WALL HUNG FIXTURE WITH CHICAGO 116,112,A8.1 SENSOR DECK MOUNTED FAUCET, 1.892 LPM/0.5 GPM, PROVIDE 12 VOLT TRANSFORMER;O OMNI L-400-0.5 SPOUT, MCGUIRE 8902CDF P-TRAP, MCGUIRE LFBV175-DF-R15 SUPPLIES & QUARTER TURN STOPS AND MCGUIRE 155A GRID STRAINER. PROVIDE MCGUIRE PROWRAP FOR P-TRAP & SUPPLIES.	2	2	1/2	1/2	-
P-420	LAVATORY, BARRIER FREE	TOTO LT307.4 WALL HUNG FIXTURE WITH CHICAGO 420-E2805ABCP MANUAL DECK MOUNTED FAUCET, 1.892 LPM/0.5 GPM;O OMNI L-400-0.5 SPOUT, MCGUIRE 8902CDF P-TRAP, MCGUIRE LFBV175-DF-R15 SUPPLIES & QUARTER TURN STOPS AND MCGUIRE 155A GRID STRAINER. PROVIDE MCGUIRE PROWRAP FOR P-TRAP & SUPPLIES.	2	2	1/2	1/2	-
P-502	SERVICE SINK, CORNER TYPE	STERN WILLIAMS MODEL CRS-2202 FLOOR SET FIXTURE WITH CHICAGO MODEL 540-LD897SWXF-RC	3	2	1/2	1/2	-
P-528	SINK -KITCHEN	ELKAY MODEL LRAD-1316 13 X 16 X 6-1/2 SINGLE BOWL COUNTER MOUNTED SINK WITH CHICAGO MODEL 1100-GN2AE35-317AB FAUCET WITH OMNI MODEL A-400-1.5 GPM LAMINAR SPOUT/MCGUIRE 8912CDF P-TRAP, MCGUIRE LFBV175-DF-R15 SUPPLIES & QUARTER TURN STOPS AND MCGUIRE 151 BASKET STRAINER. PROVIDE MCGUIRE PROWRAP FOR P-TRAP & SUPPLIES.	2	2	1/2	1/2	-
P-532	SINK - STAFF/BREAKROOM	ELKAY MODEL LRAD2922 29 X 22 X 6-1/2 DOUBLE BOWL COUNTER MOUNTED SINK WITH CHICAGO MODEL 201-AGN8AFC317ABCP FAUCET WITH OMNI MODEL A-400-1.5 GPM LAMINAR SPOUT/5.7 LPM LAMINAR SPOUT; MCGUIRE 8912CDF P-TRAP, MCGUIRE LF177LK-DF-R15 SUPPLIES & QUARTER TURN STOPS AND MCGUIRE 151 BASKET STRAINER; PROVIDE 1/2" CW LINE WITH AQUA-PURE AP200 IN-LINE FILER, VALVED & CAPPED FOR COFFEE MAKER. PROVIDE MCGUIRE PROWRAP FOR P-TRAP & SUPPLIES;IN-SIN-ERATOR HWD MODEL F-GN1100/HWT-F1000S FILTER & HEATING UNIT	2	2	1/2	1/2	-
P-533	SINK - TRAINING	ELKAY MODEL DLR332212 33 x 22 x 12 DOUBLE BOWL TYPE 316 COUNTER MOUNTED SINK WITH CHICAGO MODEL 201-AGN8AFC317ABCP FAUCET WITH OMNI MODEL A-400-1.5 GPM LAMINAR SPOUT/MCGUIRE 8912CDF P-TRAP, MCGUIRE LFBV175-DF-R15 SUPPLIES & STOPS AND MCGUIRE 152 GRID STRAINER. PROVIDE MCGUIRE PROWRAP FOR P-TRAP & SUPPLIES.	2	2	1/2	1/2	-
P-540	SINK - TRAINING	COUNTER MOUNTED FIXTURE-OFCI; PROVIDE CHICAGO MODEL 201-AGN8AFC317ABCP FAUCET WITH OMNI MODEL A-400-1.5 GPM LAMINAR SPOUT/MCGUIRE 8912CDF P-TRAP, MCGUIRE LFBV175-DF-R15 SUPPLIES & STOPS AND MCGUIRE 152 GRID STRAINER. PROVIDE MCGUIRE PROWRAP FOR P-TRAP & SUPPLIES.	2	2	1/2	1/2	-
P-541	SPRAY FAUCET - TRAINING	CHICAGO MODEL 919-LVBABCP DECK MOUNTED FAUCET, MCGUIRE LFBV175-DF-R15 SUPPLIES & STOPS. INSTALL BETWEEN P-533 & P-540.	-	-	1/2	1/2	-
P-707	EMERGENCY EYE WASH	HAWS MODEL 7611	-	-	3/4	3/4	-
P-801	WALL HYDRANT - EXTERIOR	JR SMITH MODEL 5560QT-19*H*W-RB, RECESSED BOX TYPE	-	-	3/4	-	-
P-802	HOSE BIBB - INTERIOR	JR SMITH MODEL 5672	-	-	1/2	-	-
P-803	ROOF HYDRANT - EXTERIOR	WOODFORD MODEL 65 WALL MOUNTED HYDRANTS	-	-	3/4	-	-
EWC-1	DUAL UNIT ELECTRIC WATER COOLER, BARIER FREE	ELKAY MODEL LRPBGRNM28K WITH 'WATER SENTRY' FILTER SYSTEM	2	2	1/2	-	-
FD-A	FLOOR DRAIN - FINISHED AREAS	ZURN MODEL Z/S-415-6B-P-IC(NH), SIX INCH STRAINER	2	2	1/2 TP	-	-
FD-B	FLOOR DRAIN - MECHANICAL/ ROOM	ZURN MODEL Z-520-DG-P-t-Y-IC(NH), 12 INCH SQUARE STRAINER	4	2	1/2 TP	-	-
FD-C	OPEN SITE DRAIN (HUB DRAIN)	SVCI CAST IRON PIPING AND FITTING - PROVIDE 8 x 6 REDUCER WITH 8" STANDPIPE	6	3	1/2 TP	-	-
RD-1	ROOF DRAIN	ZURN MODEL ZA-100-C-E-R	-	-	-	-	3
ORD-1	OVERFLOW ROOF DRAIN	ZURN MODEL ZA-100-C-E-R-S-W2	-	-	-	-	3

NOTES:
1 REFER TO ARCHITECURAL DETAILS FOR MOUNTING HEIGHTS OF PLUMBING FIXTURES.
2 ALL FIXTURES SHALL BE SEALED TO SURFACES WITH SILICONE SEALANT MATCHING ARCHITECTURAL WALL FINISHES.
3 MOUNT HOSE BIBBS AND WALL HYDRANTS AT 457MM ABOVE FINISHED GRADE OR FLOOR LEVEL.
4 COORDINATE SINK CUT-OUTS & FAUCET HOLES WITH CABINET MAKER.

PLUMBING SHOCK ARRESTOR SCHEDULE

SYMBOL	DESCRIPTION	CONNECTION: SIZE	CONNECTION: FIXTURE UNITS	REMARKS
SA-A	SHOCK ARRESTOR	1/2"	1 - 11	
SA-B	SHOCK ARRESTOR	3/4"	12 - 32	
SA-C	SHOCK ARRESTOR	1"	33 - 60	
SA-D	SHOCK ARRESTOR	1-1/4"	60 - 113	

NOTES:
1 PROVIDE SHOCK ARRESTORS AT THE LOCATIONS OF WATER CLOSETS, HEATERS URINALS, HOSE BIBBS, WALL HYDRANTS, EWC'S, ELECTRONIC DEVICES, PRV ASSEMBLIES & LOCATIONS SHOWN ON SHEET PL601
2 PROVIDE ACCESS PANEL AT EACH LOCATION.
3 WHEN BRANCH LINE PRESSURE EXCEEDS 65 PSI PROVIDE NEXT LARGER SIZE ARRESTOR.

BID DOCUMENT
NOVEMBER/02/2015

Revisions	ISSUES	Date
	BID DOCUMENT	11/02/2015
	100% CONSTRUCTION DOCUMENT	1/26/2015
		12/30/14
	99% CONSTRUCTION DOCUMENT	12/17/14
	95% CONSTRUCTION DOCUMENT	10/13/14
	65% DESIGN DEVELOPMENT	6/27/14
	SCHEMATIC DESIGN	3/28/14

CONSULTANTS:

PROJECT 2013-0512
CONTACT John McMichael
INTERFACE ENGINEERING
100 SW Main Street
Suite 1600
Portland, OR 97204
TEL 503.382.2266
FAX 503.382.2262
www.interfaceengineering.com

EXP. 4/13/16 11/02/15

ARCHITECT/ENGINEERS:

KMA INC. ARCHITECTS
14410 SE Petrovitsky Rd. Suite 206
Renton, WA 98058
425-291-7078

Drawing Title
PLUMBING SCHEDULES

Approved: Project Director
Approver

Project Title
INTENSIVE OUTPATIENT MENTAL HEALTH AND EDUCATION BUILDING
SPOKANE VA MEDICAL CENTER
SPOKANE, WASHINGTON 99205

Location
SPOKANE, WASHINGTON 99205

Issue Date **11/02/2015** | Checked **JRM** | Drawn **IEI**

Project Number 668-313
Building Number 40A
Drawing Number **PL610**
Dwg. of

Office of Construction and Facilities Management
Department of Veterans Affairs