ABBREVIATIONS

(NOT ALL SYMBOLS WILL APPLY TO THIS WORK)

A/E	ARCHITECT / ENGINEER
AD	AREA DRAIN
AFF	ABOVE FINISH FLOOR
AFG	ABOVE FINISH GRADE
AG	AIR GAP
AP	ACCESS PANEL
AS	AUTOMATIC SPRINKLER
ASD	ADJUSTABLE SPEED DRIVES
ASD	AUTOMATIC SPRINKLER DRAIN
ASHRAE	AMERICAN SOCIETY HEATING, REFRIGERATION, AIR CONDITIONING ENGINEERS
ASME	AMERICAN SOCIETY MECHANICAL ENGINEERS
ASPE	AMERICAN SOCIETY PLUMBING ENGINEERS
ASR	AUTOMATIC SPRINKLER RISER
AV	ACID VENT
AW	ACID WASTE
BFP	REDUCED PRESSURE BACKFLOW PREVENTER
BHP	BREAK HORSEPOWER
BSP	BLACK STEEL PIPE
BT	BATHTUB
BTU	BRITISH THERMAL UNIT
BTUH	BRITISH THERMAL UNIT PER HOUR
C	CELSIUS
CGA	COMPRESSED GAS ASSOCIATION
CI	CAST IRON
CO	CLEANOUT
CS	CLINICAL SINK
CV	CONTROL VALVE
(D)	EXISTING ITEM TO BE DEMOLISHED
DCW	DOMESTIC COLD WATER
DHW	DOMESTIC HOT WATER
DHWR	DOMESTIC HOT WATER RETURN
DHWR	DOMESTIC WATER RETURN
DHWS	DOMESTIC HOT WATER SUPPLY
DI	DEIONIZED WATER
DN	DOWN
DOE	DEPARTMENT OF ENERGY
DS	DOWNSPOUT
DW	DISHWASHER
DWG	DRAWING
DWH	DOMESTIC WATER HEATER
DWR	DRINKING WATER RETURN
DWS	DRINKING WATER SUPPLY
DWV	DRAIN WASTE VENT
(E)	EXISTING ITEM TO REMAIN
EL	ELEVATION
EMCS	ENERGY MONOSERRAT AND CENTRAL SYSTEM
EPA	ENVIROMENTAL PROTECTION AGENCY
EPACT	ENERGY POLICY ACT
ESC	ESCUTCHEON
ESH	EMERGENCY SHOWER
ET	EXPANSION TANK
EWC	ELECTRIC WATER COOLER
EWC	ELECTRIC WATER COOLER
EWH	ELECTRIC WATER HEATER
EWS	EYE WASH STATION
EX	EXISTING
F	FAHRENHEIT
FCO	FLOOR CLEANOUT
FCW	FILTERED COLD WATER
FD	FLOOR DRAIN
FDC	FIRE DEPARTMENT (HOSE) CONNECTION
FM	FLOW METER
FOP	FUEL OIL PUMP
FOR	FUEL OIL RETURN
FOS	FUEL OIL SUPPLY
FOV	FUEL OIL VENT
FS	FLOOR SINK
FS	FLOW SWITCH
FU	FIXTURE UNITS
GAL	GALLON
GCO	GRADE CLEANOUTS
GPD	GALLONS PER DAY
GPH	GALLONS PER HOUR
GPM	GALLONS PER MINUTE
GPR	GAS PRESSURE REGULATOR
GRS	GAS REGULATOR STATION
GT	GREASE TRAP
GVTR	GAS VENT THROUGH ROOF
GWH	GAS FIRED WATER HEATER
H&CW	HOT AND COLD WATER
HB	HOSE BIBB
HD	HUB DRAIN
HEX	HEAT EXCHANGER
HP	HORSEPOWER
HS	HAND SINK
HST	HOT WATER STORAGE TANK (DOMESTIC)
HWB	HOT WATER BOILER
HWCP	HOT WATER CIRCULATING PUMP
HWP	HOT WATER PUMP
HYD	HYDRANT
ICW	INDUSTRIAL COLD WATER
INV	INVERT
IPC	INTERNATIONAL PLUMBING CODE
IRW	IRRIGATION WATER
IW	INDIRECT WASTE
IWH	INSTANTANEOUS WATER HEATER
IWR	INDUSTRIAL WATER RETURN
IWS	INDUSTRIAL WATER SUPPLY
KW	KILOWATT
KWHR	KILOWATT-HOUR
L/S	LITER PER SECOND
LA	LABORATORY AIR
LAV	LAVATORY
LBS/HR	POUNDS PER HOUR
LCW	LABORATORY COLD WATER
LHW	LABORATORY HOT WATER
LNG	LIQUID NATURAL GAS
LOX	LIQUID OXYGEN
LV	LABORATORY VACUUM
LW	LOW WATER
M	METER
MA	MEDICAL AIR
MAV	MANUAL AIR VENT
MBH	1000 BTUH
MED	MEDICAL
MER	MECHANICAL EQUIPMENT ROOM
MH	MANHOLE
MOU	MEMORANDUM OF UNDERSTADING
MSB	MOP SERVICE BASIN
MV	MEDICAL VACUUM
N2	NITROGEN
N2O	NITROUS OXIDE
NC	NORMALLY CLOSED
NG	NATURAL GAS
NIC	NOT IN CONTRACT
NO	NORMALLY OPEN
NOM.A.	NOMINAL
NPW	NON POTABLE WATER
NTC	NOT TO SCALE
O2	OXYGEN
OC	ON CENTER
OD	OUTSIDE DIAMETER
OFD	OVERFLOW DRAIN
OR	OPERATING ROOM
OVFL	OVERFLOW
PA	PASCAL
PD	PRESSURE DROP OR DIFFERENCE
PDI	PLUMBING AND DRAINAGE INSTITUTE
PG	PRESSURE GAGE
PP	PLUMBING PUMP
PPM	PARTS PER MILLION
PRS	PRESSURE REDUCING STATION
PRV	PRESSURE REDUCING VALVE
PSI	POUNDS PER SQUARE INCH
PSIA	POUNDS PER SQUARE INCH ATMOSPHERE
PSIG	POUNDS PER SQUARE INCH GAUGE
PTRV	PRESSURE TEMPERATURE RELIEF VALVE
PW	POTABLE WATER
RD	ROOF DRAIN
RDL	ROOF DRAIN LEADER
RL	ROOF LEADER
RO	REVERSE OSMOSIS WATER
RWL	RAIN WATER LEADER
SAN	SANITARY SEWER
SMACNA	SHEET METAL AND AIR CONDITIONING CONTRACTORS NATIONAL ASSOCIATION
SCFM	STANDARD CUBIC FOOT/MINUTE
SCW	SOFTENED COLD WATER
SDMH	STORM DRAIN MANHOLE
SP	SUMP PUMP
SPR	SPRINKLER LINE
SQFT	SQUARE FEET
SS	STAINLESS STEEL
ST	STORAGE TANK
SW	STORM WATER
TCV	TEMPERATURE CONTROL VALVE
TD	TEMPERATURE DIFFERENCE
TD	TRENCH DRAIN
TDH	TOTAL DYNAMIC HEAD
TEMP	TEMPERATURE
TMV	THERMOSTATIC MIXING VALVE
TP	TRAP PRIMER
TSTAT	THERMOSTAT
TWR	TEMPERED WATER RETURN
TWS	TEMPERED WATER SUPPLY
TYP	TYPICAL
UPC	UNIFORM PLUMBING CODE
V	VENT
VAC	VACUUM
VB	VACUUM BREAKER
VCO	VACUUM CLEANER OUTLET
VP	VACUUM PUMP
VS	VENT STACK
VTR	VENT THROUGH ROOF
W	WASTE
WC	WATER CLOSET
WCO	WALL CLEANOUT
WG	WATER GAGE
WH	WALL HYDRANT
WH	WATER HEATER
WHA	WATER HAMMER ARRESTER
WL	WATER LINE
WM	WATER METER
WPD	WATER PRESSURE DROP
WS	WASTE STACK
YCO	YARD CLEANOUT
YH	YARD HYDRANT

VALVE SYMBOLS

(NOT ALL SYMBOLS WILL APPLY TO THIS WORK)

- GATE VALVE – THREADED/FLANGED
- GLOBE VALVE – THREADED/FLANGED
- GATE VALVE WITH 3/4" HOSE ADAPTER
- CHECK VALVE
- WYE STRAINER (WITH BALL VALVE & HOSE CONNECTION)
- WYE STRAINER WITH VALVED DRAIN AND QUICK-COUPLE HOSE CONNECTOR
- FLEXIBLE CONNECTION
- ANGLE GLOBE VALVE
- BUTTERFLY VALVE
- BALL VALVE
- MODULATING CONTROL VALVE
- MODULATING CONTROL BUTTERFLY VALVE
- TWO POSITION CONTROL VALVE
- THREE-WAY MODULATING CONTROL VALVE
- THREE-WAY TWO POSITION CONTROL VALVE
- PRESSURE REGULATING VALVE
- PRESSURE SAFETY VALVE
- AUTOMATIC BALANCING CONTROL VALVE
- WATER BALANCE DEVICE
- CIRCUIT SETTER VALVE
- GATE VALVE WITH GLOBE-VALVED BYPASS
- PLUG VALVE
- CONTROL VALVE (CV) – FLOAT-OPERATED
- PRESSURE REDUCING VALVE (PRV)
- WATER LEVEL CONTROLLER
- FLOW METER

GENERAL PIPING SYMBOLS

(NOT ALL SYMBOLS WILL APPLY TO THIS WORK)

- DIRECTION OF PIPE PITCH (DOWN)
- DIRECTION OF FLOW
- ANCHOR
- REDUCER OR INCREASER
- ECCENTRIC REDUCER
- TOP CONNECTION, 45° OR 90°
- BOTTOM CONNECTION, 45° OR 90°
- SIDE CONNECTION
- CAPPED OUTLET
- RISE OR DROP IN PIPE
- UNION
- PIPE UP
- PIPE DOWN
- INVERTED BUCKET TRAP SET INCLUDING PIPING ACCESSORIES SEE DETAIL
- FLOAT & THERMOSTATIC TRAP SET INCLUDING PIPING ACCESSORIES SEE DETAIL
- THERMOSTATIC TRAP SET INCLUDING PIPING ACCESSORIES SEE DETAIL
- THERMOMETER
- PRESSURE GAGE
- FLOW ELEMENT
- REFRIGERANT SIGHT GLASS
- TEST PLUG (PRESSURE/TEMPERATURE)
- AUTOMATIC AIR VENT
- MANUAL AIR VENT
- QUICK-COUPLE HOSE CONNECTOR
- END OF DEMOLITION
- CONNECTION BETWEEN NEW AND EXISTING
- EXISTING ITEMS TO BE DEMOLISHED
- RISER NUMBER (EXAMPLE=1)
- A1 / M0601 — PHOTO INDICATOR
- PENETRATION

PIPING SYMBOLS

(NOT ALL SYMBOLS WILL APPLY TO THIS WORK)

- HPS — HIGH PRESSURE STEAM (60 PSIG AND ABOVE)
- HPR — HIGH PRESSURE STEAM CONDENSATE RETURN
- MPS — MEDIUM PRESSURE STEAM (16 PSIG THRU 59 PSIG)
- MPR — MEDIUM PRESSURE STEAM CONDENSATE RETURN
- LPS — LOW PRESSURE STEAM (15 PSIG AND BELOW)
- LPR — LOW PRESSURE STEAM CONDENSATE RETURN
- PC — CONDENSATE PUMP DISCHARGE
- HWS — HOT WATER HEATING SUPPLY
- HWR — HOT WATER HEATING RETURN
- GHS — GLYCOL-WATER HEATING SUPPLY
- GHR — GLYCOL-WATER HEATING RETURN
- SWS — SOLAR WATER SUPPLY
- SWR — SOLAR WATER RETURN
- RL — REFRIGERANT LIQUID
- RS — REFRIGERANT SUCTION
- RHG — REFRIGERANT HOT GAS
- CWS — CHILLED WATER SUPPLY (FROM TOWER)
- CWR — CHILLED WATER RETURN (TO TOWER)
- GCS — CHILLED GLYCOL-WATER SUPPLY
- GCR — CHILLED GLYCOL-WATER RETURN
- MW — MAKE-UP WATER
- D — DRAIN LINE
- V — VENT LINE
- GRS — GLYCOL-WATER RUN AROUND SUPPLY
- GRR — GLYCOL-WATER RUN AROUND RETURN
- X — EXISTING PIPE TO BE REMOVED
- FWPD — FEEDWATER PUMP DISCHARGE
- FWPS — FEEDWATER PUMP SUCTION
- CTPD — CONDENSATE TRANSFER PUMP DISCHARGE
- CTPS — CONDENSATE TRANSFER PUMP SUCTION
- VR — VACUUM CONDENSATE RETURN
- TC — TUBE CLEANER WATER SUPPLY
- BO — BOILER BLOWOFF
- CBD — CONTINUOUS BLOWDOWN
- BWS — BOILER WATER SAMPLE
- FWS — FEEDWATER SAMPLE (FROM DEAERATOR)
- CF — CHEMICAL FEED
- OFL — OVERFLOW
- A — COMPRESSED AIR
- G — NATURAL GAS MAIN FUEL
- G(I) — NATURAL GAS IGNITER FUEL
- LPG(I) — LIQUEFIED PETROLEUM GAS IGNITER FUEL
- FOS — FUEL OIL SUPPLY
- FOR — FUEL OIL RETURN
- CW — COLD WATER (CITY WATER)
- SW — SOFTENED WATER
- HW — HOT WATER
- RH — ROLLER-TYPE HANGER
- SH — VARIABLE SPRING-TYPE HANGER (TYPE 51)*
- SCH — SPRING CUSHION-TYPE HANGER (TYPE 48 OR 49)*
- CH — CLEVIS-TYPE HANGER
- TH — TRAPEZE HANGER (PROVIDE U-BOLT PIPE ATTACHMENT TO TRAPEZE EXCEPT WHERE RH ARE INDICATED)
- PS — FLOOR-SUPPORTED PIPE STAND
- RC — RISER CLAMP (TYPE 42)*
- WB — WALL BRACKET (TYPE 31, 32, 33)*
- CSH — CONSTANT SUPPORT HANGER (TYPE 54, 55, 56)*
- SS — SLIDING SUPPORTS (TYPE 35)*

* TYPE NUMBERS REFER TO MANUFACTURER'S STANDARDIZATION SOCIETY STANDARD PRACTICE SP-58

- W — EXISTING SANITARY PIPE
- V — EXISTING VENT PIPE
- W — NEW SANITARY WASTE PIPE
- V — NEW SANITARY VENT PIPE
- MA — NEW MEDICAL AIR LINE
- V — NEW VACUUM LINE
- O — NEW OXYGEN LINE

EXECUTION

1. LAYOUT: PLUMBING
   a. PRIOR TO INSTALLATION, LAYOUT ALL PLUMBING WORK IN A MANNER THAT WILL ALLOW INSTALLATION OF ALL OTHER WORK INDICATED.
   b. COORDINATE AND COMMUNICATE INSTALLATION OF PLUMBING WORK WITH THAT OF OTHER TRADES, SO THAT ALL WORK MAY BE INSTALLED IN SPACE AVAILABLE.
   c. PROVIDE ALL ADA INSULATION PROTECTION AS REQUIRED.
2. EQUIPMENT:
   a. INSTALL ALL MATERIAL AND EQUIPMENT IN A NEAT AND WORK- MANLIKE MANNER IN STRICT ACCORDANCE WITH MANUFACTURER'S RECOMMENDATIONS AND PROVIDE FOR THE FOLLOWING:
      i. CONNECTION OF PIPING AND ACCESSORIES TO EQUIPMENT SHALL PERMIT EASY REMOVAL WITH MINIMUM OF DISTURBANCE TO OTHER EQUIPMENT AND MATERIALS.
      ii. ITEMS REQUIRING INSPECTION, ADJUSTMENT, MAINTENANCE, SERVICING OR REPLACEMENT SHALL BE EASILY ACCESSIBLE.
   b. SLEEVE TO BE INSTALLED (2" MINIMUM AFF) FOR ALL PENETRATIONS.
3. EXISTING PLUMBING SYSTEMS:
   a. ALL EXISTING PIPING, MATERIALS OR EQUIPMENT NOT REQUIRED FOR THE NEW SYSTEM, WHETHER OR NOT SUCH ITEMS ARE INDICATED ON PLANS, SHALL BE REMOVED. THE STATUS OF ALL SUCH ITEMS SHALL BE VERIFIED BY THIS CONTRACTOR BEFORE DISCONNECTING, CAPPING OR REMOVING.
   b. ALL EXISTING PIPING, MATERIALS OR EQUIPMENT WHICH WILL REMAIN AS PART OF THE ACTIVE SYSTEM SHALL BE VISUALLY INSPECTED. ANY SUCH ITEMS FOUND TO BE DEFECTIVE SHALL BE REMOVED AND REPLACED WITH NEW MATERIALS OF LIKE SUBSTANCE, SIZE AND TYPE. ALL PLUMBING SYSTEMS THAT HAVE BEEN REPAIRED, MODIFIED OR RELOCATED SHALL BE TESTED IN ACCORDANCE WITH THIS SPECIFICATION FOR NEW SYSTEMS.

TESTS AND INSPECTIONS

1. DOMESTIC WATER SYSTEM – STERILIZE THE ENTIRE WATER DISTRIBUTION SYSTEM THOROUGHLY WITH A SOLUTION CONTAINING NOT LESS THAN 50 PARTS PER MILLION OF AVAILABLE CHLORINE. USE EITHER LIQUID CHLORINE OR CALCIUM HYPOCHLORITE CONFORMING TO FEDERAL SPECIFICATIONS. ALLOW THE STERILIZING SOLUTION TO REMAIN IN THE SYSTEM FOR EIGHT HOURS. DURING WHICH TIME ALL VALVES AND FAUCETS SHALL BE OPENED AND CLOSED SEVERAL TIMES. AFTER STERILIZATION, THE SOLUTION SHALL BE FLUSHED FROM THE SYSTEM WITH CLEAN WATER UNTIL THE RESIDUAL CHLORINE CONTENT IS NOT GREATER THAN 0.2 PARTS PER MILLION UNLESS DIRECTED OTHERWISE. TEST SYSTEM HYDROSTATICALLY AT 100 PSIG MINIMUM FOR A PERIOD OF 24 HOURS WITH A PRESSURE LOSS NOT TO EXCEED 1 PSIG.
2. SANITARY DRAINAGE SYSTEM – SHALL BE WATER TESTED BEFORE FINAL CONNECTION TO THE SANITARY SEWER. ALL OPENINGS SHALL BE PLUGGED EXCEPT THE HIGHEST OPENING WHICH SHALL PRODUCE A MINIMUM OF A 10 FOOT HEAD. THE SYSTEM SHALL RETAIN THE WATER LEVEL FOR AT LEAST 15 MINUTES AT WHICH TIME ALL JOINTS SHALL BE INSPECTED AND ALL OBSERVED LEAKS CORRECTED.
3. FINAL INSPECTION – BEFORE FINAL INSPECTION, CERTIFY IN WRITING THAT ALL SYSTEMS ARE INSTALLED, ADJUSTED, TESTED AND READY FOR USE.

OTHER

1. GUARANTEE – ALL WORK FOR WHICH MATERIALS ARE FURNISHED, FABRICATED OR FIELD ERECTED BY THE CONTRACTOR. ALL FACTORY-ASSEMBLED EQUIPMENT FOR WHICH NO SPECIFIC MANUFACTURER'S GUARANTEE IS FURNISHED, AND ALL WORK IN CONNECTION WITH INSTALLING MANUFACTURER'S GUARANTEED EQUIPMENT. THIS PERSONAL GUARANTEE SHALL EXIST FOR A PERIOD OF ONE YEAR FROM THE DATE OF FINAL ACCEPTANCE OF THE WORK AND SHALL APPLY TO DEFECTS IN MATERIAL AND TO DEFECTIVE WORKMANSHIP OF ANY KIND.
2. FACTORY ASSEMBLED EQUIPMENT AND DEVICES – FOR SUCH ITEMS IN WHICH THE MANUFACTURER FURNISHES A GUARANTEE, AS STANDARD TRADE PRACTICE, OBTAIN SUCH GUARANTEES AND REPLACE ANY SUCH EQUIPMENT WHICH PROVES DEFECTIVE DURING THE LIFE OF THESE GUARANTEES.
3. GUARANTEE ASSURANCE – IN THE EVENT OF FAILURE OF ANY WORK, EQUIPMENT OR DEVICE DURING THE LIFE OF THE GUARANTEE, REPAIR, REPLACE OR RESTORE AT NO COST TO THE OWNER, ANY PARTS OF THE STRUCTURE OR BUILDING WHICH MAY BE DAMAGED EITHER AS THE DIRECT RESULT OF THE DEFECTIVE WORK OR AS A RESULT OF THE CONTRACTOR REPLACING THE DEFECTIVE WORK OR MATERIAL. THIS WORK SHALL BE PERFORMED AT A TIME AND IN A MANNER ACCEPTABLE TO THE OWNER.

ARCHITECTURAL LEGEND

(REFER ARCHITECTURAL DRAWINGS FOR LOCATIONS AND DETAILS)

- FIRE RESISTIVE RATED LINE, 2 HOUR
- SR — NON-RATED SMOKE RESISTIVE
- AREA NOT IN CONTRACT

GENERAL NOTES

1. THE CONTRACTOR SHALL LOCATE ALL NEW CONCRETE PENETRATIONS SUCH THAT THE PENETRATION DOES NOT OCCUR IN A CONCRETE BEAM OR PAN RIB.
2. THE PLUMBING CONTRACTOR SHALL REFERENCE DRAWINGS GI102 TO GI110 FOR PHASING REQUIREMENTS OF PROJECT. PHASING SHALL BE INCLUDED IN BASE BID.
3. DRAWINGS:
   a. PLUMBING DRAWINGS ARE TO BE CONSIDERED DIAGRAMATIC AND INDICATE GENERAL ARRANGEMENT OF WORK AND SYSTEMS. IT IS NOT POSSIBLE TO INDICATE EVERY FITTING, VALVE, OFFSET, TRAP, ACCESS PANEL, ETC. THAT IS REQUIRED FOR A PROPER WORKING SYSTEM AND MAINTENENCE THEROF. NO ADDITIONAL COST WILL BE ALLOWED FOR SUCH ITEMS.
   b. FOR EXISTING SYSTEMS, ALL LINES AND CONDITIONS SHOWN ON THE DRAWING HAVE BEEN SHOWN IN GOOD FAITH. HOWEVER, THERE IS NO IMPLIED GUARANTEE AS TO THEIR SIZE, LOCATION, ELEVATION, COMPLIANCE WITH CURRENT CODES OR CONDITIONS. THE CONTRACTOR SHALL INVESTIGATE ALL EXISTING CONDITIONS AND SHALL MODIFY THE PROPOSED WORK AS REQUIRED OR DIRECTED.
   c. REFER TO ARCHITECTURAL DRAWINGS FOR EXACT EQUIPMENT LOCATIONS, ETC. AND OTHER SPACE CONDITIONS. CHECK DRAWINGS OF OTHER TRADES TO COORDINATE PLUMBING WORK.
4. FEES/INSPECTIONS:
   a. PAY ALL FEES AND ARRANGE FOR ALL INSPECTIONS. SUCH INSPECTIONS ARE TO BE CONDUCTED BY AUTHORITIES HAVING JURISDICTION. ADVISE THE COR/G.C. OF ANY MODIFICATION TO OR DEVIATION FROM THE CONTRACT DOCUMENTS IN ORDER TO COMPLY WITH CODES. ENTERING INTO A CONTRACT WILL BE DEEMED AS EVIDENCE OF COMPLIANCE WITH THE REQUIREMENTS OF AUTHORITIES HAVING JURISDICTION OVER THE WORK.
5. QUALITY ASSURANCE:
   a. ALL PLUMBING WORK SHALL COMPLY WITH ALL APPLICABLE STATE AND LOCAL CODES AS WELL AS ALL UTILITY COMPANY REGULATIONS. THESE CODES SHALL SUPERCEDE ANY INFORMATION CONTAINED WITHIN THE DRAWING SET CONTRADICTING THESE CODES.
   b. EACH PIECE OF EQUIPMENT SHALL HAVE MANUFACTURER'S NAME, ADDRESS, SERIAL, AND MODEL NUMBERS ON A PLATE SECURELY ATTACHED TO IT.
   c. ALL PIPING ABOVE GRADE SHALL HAVE AN EXPOSED TAG TO IDENTIFY THE PIPE.
   d. EACH PIECE OF EQUIPMENT SHALL BE INSTALLED IN ACCORDANCE WITH THE MANUFACTURERS RECOMMENDATIONS OR AS INDICATED ON PLANS.
   e. ALL PLUMBING WORK SHALL BE PERFORMED BY INDIVIDUALS SKILLED IN THIS TRADE AND COMPLETED IN A PROFESSIONAL MANNER.
   f. EACH PIECE OF EQUIPMENT SHALL BE INSTALLED AS FREE FROM NOISE AND VIBRATION AS POSSIBLE.
4. EQUIPMENT DELIVERY AND STORAGE:
   a. DELIVER EQUIPMENT TO THE SITE IN MANUFACTURER'S ORIGINAL PACKAGING. CLEARLY MARK EACH ITEM WITH THE PROPER IDENTIFICATION NUMBER. STORE IN SAFE DRY AREA.
5. EQUIPMENT MANUALS/SUBMITTALS:
   a. SUBMIT EQUIPMENT CATALOGS TO OWNER/G.C. FOR APPROVAL PRIOR TO PURCHASE AND INSTALLATION. ONCE APPROVED, PROVIDE OWNER/G.C. WITH COPIES OF THESE ITEMS.
6. SITE INSPECTION (AS REQUIRED):
   a. CONTRACTOR SHALL ATTEND PRE-BID WALK THROUGH AT THE SITE TO INSPECT EXISTING FACILITIES BEFORE BID IN ORDER TO ENSURE PROPER EVALUATION OF WORKING CONDITIONS AND LOCATIONS OF EXISTING EQUIPMENT AS REQUIRED. CONTRACTOR IS RESPONSIBLE FOR THE INCLUSION OF ALL REQUIRED DEMOLITION IN AREAS UNDERGOING MODIFICATION WHETHER OR NOT SUCH WORK IS INDICATED ON THE DRAWINGS. DEMOLITION SHALL GENERALLY BE ARRANGED TO AGREE WITH THE ACCOMPLISHMENT OF WORK UNDER THE VARIOUS PHASES, IF APPLICABLE, AND IN COORDINATION WITH OTHER TRADES. CONSULT ARCHITECTURAL DRAWINGS FOR OTHER REQUIREMENTS.

PRODUCTS/MATERIALS

1. PLUMBING FIXTURES/EQUIPMENT:
   a. ALL PLUMBING FIXTURES/EQUIPMENT SHALL BE AS INDICATED ON THE FIXTURE SCHEDULE OR AN APPROVED EQUAL.
2. PIPING:
   a. DOMESTIC WATER PIPING ABOVE GRADE – SHALL BE TYPE "L" HARD COPPER TUBING AND CAST BRONZE OR WROUGHT COPPER SOLDER JOINT FITTINGS. SOLDER SHALL BE LEAD FREE, HAVING A COMPOSITION SIMILAR TO 95.5% TIN, 4% COPPER AND 0.5% SILVER AS MANUFACTURED BY ENGELHARD CORP. OR EQUAL. VALVES IN DOMESTIC WATER PIPING 2" AND SMALLER SHALL BE BRONZE BODY WITH FULL PORT STAINLESS STEEL BALL VALVE WITH LEVER HANDLE. INSULATION SHALL BE 3/4" THICK, PREFORMED FIBERGLASS WITH VAPOR BARRIER JACKET. AS AN OPTION, FOR PIPE SIZES 2" AND SMALLER, THE CONTRACTOR MAY USE A 3/8" THICK PRE-MOLDED FOAM PLASTIC SIMILAR TO "ARMAFLEX". IN EITHER CASE THE INSULATION MATERIAL SHALL HAVE A FLAME SPREAD RATING OF 25 AND A SMOKE GENERATED RATING OF 50.
      i. PROVIDE REDUCED PRESSURE PRINCIPLE BACKFLOW PREVENTOR AT DOMESTIC WATER ENTRY TO BUILDING. PROVIDE SHUT-OFF VALVES BEFORE AND AFTER BACKFLOW PREVENTOR FOR MAINTENANCE. ENTIRE ASSEMBLY SHALL BE HOUSED IN VALVE BOX WITH SURFACE ACCESS. UPGRADE AS REQUIRED BY CODE. AIR GAP DRAIN TO MOP SINK AND SUPPORT AS REQUIRED.
   b. CONDENSATE DRAIN PIPING – SHALL BE P.V.C. DWV SCH. 40 OR TYPE "L" HARD COPPER TUBING. INSULATE CONDENSATE DRAIN WITH A PREFORMED NITRIL RUBBER BASED ELASTROMETRIC PIPE INSULATION, SECURED WITH ADHESIVE. INSULATION THICKNESS SHALL BE 3/4" THICK.
   c. SANITARY WASTE & VENT PIPING ABOVE GROUND – SHALL BE NO-HUB CAST IRON PIPE AND FITTINGS WITH NEOPRENE SLEEVE AND STAINLESS STEEL DRAW BAND JOINTS, OR WHERE ALLOWED, THE CONTRACTOR MAY USE P.V.C. SCHEDULE 40 DWV PIPING AND FITTINGS. FLOOR SINK THAT SERVE BEVERAGE UNITS TO BE "DURIRON" OR EQUAL.
   d. SANITARY WASTE & VENT PIPING BELOW GROUND – SHALL BE SERVICE WEIGHT CAST IRON PIPE, BELL AND SPIGOT TYPE WITH NEOPRENE GASKET JOINTS.
3. METER:
   a. INSTALL NEW WATER METER PER KCAB CRITERIA. FUNCTIONAL PHONE LINE REQUIRED WITHIN 4'-0" OF METER (REFER TO E1.0). MOUNT METER ON WALL 60" AFF. METER TO BE PROVIDED WITH LOCKABLE BALL VALVE BY-PASS.

FULLY SPRINKLERED
BID DOCUMENTS - FOR CONSTRUCTION

Revisions:	Date

CONSULTANTS:

10 Sept 2014
STATE OF MICHIGAN
BLAINE CAMIEL VAN GANSBEKE
ENGINEER No. 6201056550
LICENSED PROFESSIONAL ENGINEER

ARCHITECT/ENGINEERS:

PARADIGM
ENGINEERS AND CONSTRUCTORS
200 Envoy Circle #201, Louisville KY 40299 – PH: 502.339.8511 – www.paradigmusa.com

Drawing Title	PLUMBING SYMBOLS AND NOTES
Approved Project Director	
Project Title	RENOVATE 25 BED MEDICAL SURGICAL INPATIENT UNIT
Location	FAYETTEVILLE VAMC, 2300 RAMSEY ST, FAYETTEVILLE, NC 28304
Date	09-10-2014
Checked	KLP
Drawn	JDM
Project Number	565-13-103
Building Number	1
Drawing Number	P-001

Office of Construction and Facilities Management
Department of Veterans Affairs

VA FORM 08-6231

NOTES

A. REFER TO DWG. P-001 FOR LEGEND, ABBREVIATIONS, AND GENERAL NOTES RELATED TO THIS SHEET.

B. ALL EXISTING PIPING, DUCTWORK, SPRINKLERS, CONDUIT, LIGHTING OR OTHER CONSTRUCTION SHALL BE RELOCATED AS REQUIRED FOR ALL DEMOLITION AND INSTALLATION WORK.

C. REFER TO PP100C FOR NEW PLUMBING IN CRAWLSPACE.

D. THE CONTRACTOR SHALL LOCATE ALL NEW CONCRETE PENETRATIONS SUCH THAT THE PENETRATION DOES NOT OCCUR IN A CONCRETE BEAM OR PAN RIB.

E. THE PLUMBING CONTRACTOR SHALL REFERENCE DRAWINGS GI102 TO GI110 FOR PHASING REQUIREMENTS OF PROJECT. PHASING SHALL BE INCLUDED IN BASE BID.

KEY NOTES

1. NEW SANITARY RISER TO BE INSTALLED AT THIS LOCATION. CORE DRILL NEW PENETRATION AND REWORK SHAFT ACCORDINGLY; REFER TO ARCHITECTURAL AND SANITARY DRAWINGS FOR INFORMATION.
2. REFER TO RISER 2 INFO ON PS102.
3. REFER TO RISER 5 INFO ON PS105.
4. REFER TO RISER 6 INFO ON PS106.
5. REFER TO RISER 7 INFO ON PS106.
6. REFER TO RISER 8 INFO ON PS106.
7. REFER TO RISER 9 INFO ON PS107.
8. REFER TO RISER 10 INFO ON PS107.
9. REFER TO RISER 11 INFO ON PS107.
10. REFER TO RISER 12 INFO ON PS108.

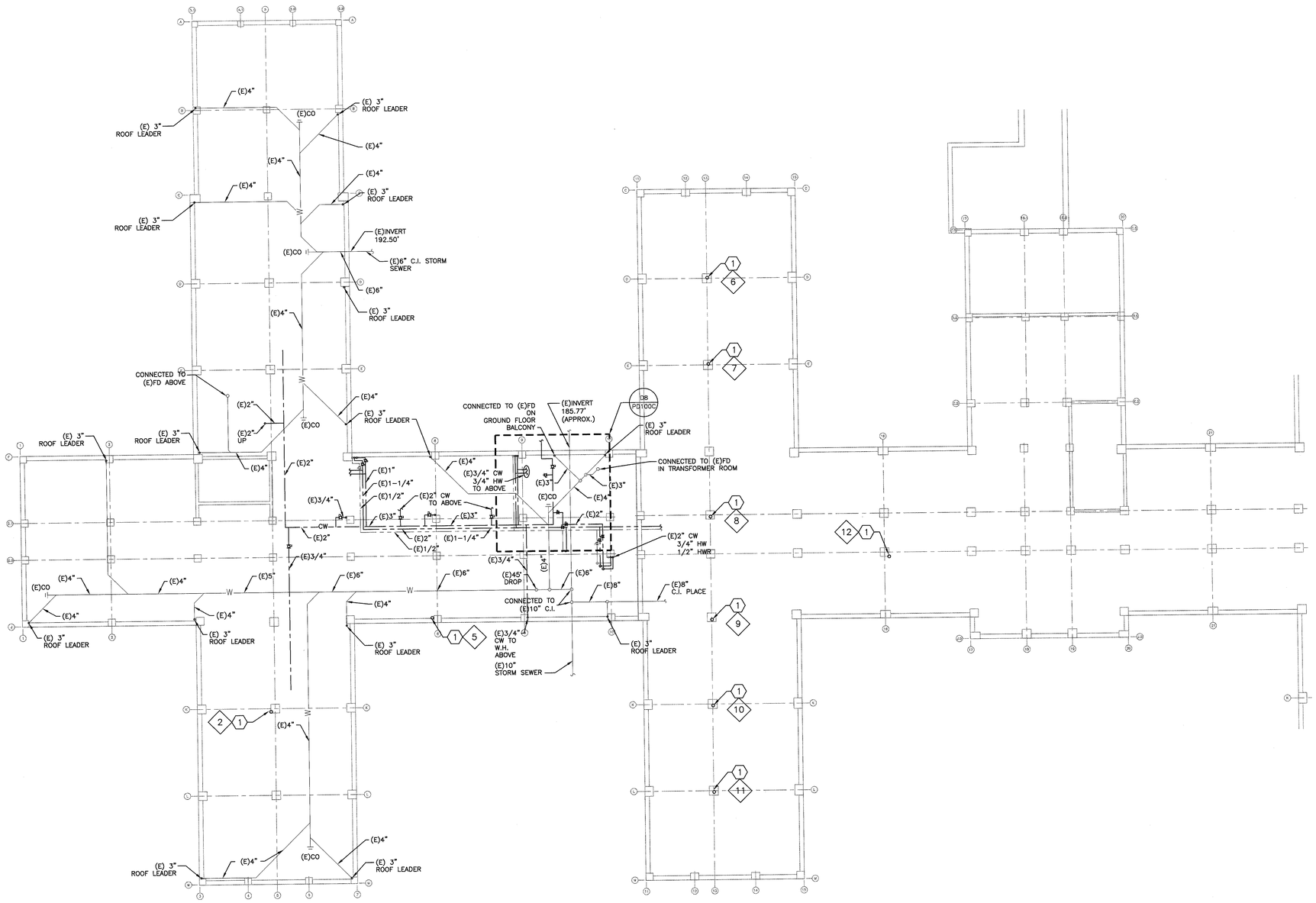

F1 PARTIAL FLOOR PLAN
3/32" = 1'-0"

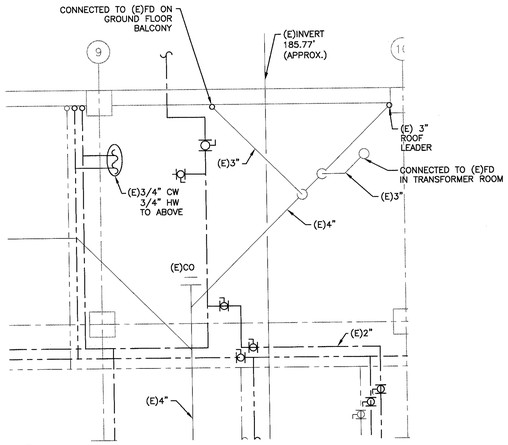

D8 ENLARGED PARTIAL FLOOR PLAN
1/4" = 1'-0"

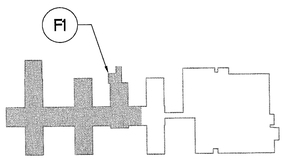

KEY PLAN - CRAWLSPACE
NTS

FULLY SPRINKLERED
BID DOCUMENTS - FOR CONSTRUCTION

Revisions	Date

CONSULTANTS:

STATE OF MICHIGAN — BLAINE CAMIEL VAN GANSBEKE — ENGINEER — No. 6201056550 — PROFESSIONAL ENGINEER — 10 Sept 2014

ARCHITECT/ENGINEERS:
PARADIGM ENGINEERS AND CONSTRUCTORS
200 Envoy Circle #201, Louisville KY 40299 – PH: 502.339.8511 – www.paradigmusa.com

Drawing Title	PLUMBING DEMOLITION PLAN CRAWLSPACE
Approved Project Director	
Project Title	RENOVATE 25 BED MEDICAL SURGICAL INPATIENT UNIT
Location	FAYETTEVILLE VAMC, 2300 RAMSEY ST, FAYETTEVILLE, NC 28304
Date	09-10-2014
Checked	KLP
Drawn	JDM
Project Number	565-13-103
Building Number	1
Drawing Number	PD100C

Office of Construction and Facilities Management
Department of Veterans Affairs

VA FORM 08-6231

NOTES

A. REFER TO DWG. P-001 FOR LEGEND, ABBREVIATIONS, AND GENERAL NOTES RELATED TO THIS SHEET.

B. ALL EXISTING PIPING, DUCTWORK, SPRINKLERS, CONDUIT, LIGHTING OR OTHER CONSTRUCTION SHALL BE RELOCATED AS REQUIRED FOR ALL DEMOLITION AND INSTALLATION WORK.

C. REFER TO PP100 FOR NEW PLUMBING IN BASEMENT

D. THE CONTRACTOR SHALL LOCATE ALL NEW CONCRETE PENETRATIONS SUCH THAT THE PENETRATION DOES NOT OCCUR IN A CONCRETE BEAM OR PAN RIB.

E. THE PLUMBING CONTRACTOR SHALL REFERENCE DRAWINGS GI102 TO GI110 FOR PHASING REQUIREMENTS OF PROJECT. PHASING SHALL BE INCLUDED IN BASE BID.

KEY NOTES

1. NEW SANITARY RISER TO BE INSTALLED AT THIS LOCATION. CORE DRILL NEW PENETRATION AND REWORK SHAFT ACCORDINGLY; REFER TO ARCHITECTURAL AND SANITARY DRAWINGS FOR INFORMATION.
2. (NOT USED)
3. REFER TO RISER 6 INFO ON PS106.
4. REFER TO RISER 7 INFO ON PS106.
5. REFER TO RISER 8 INFO ON PS106.
6. REFER TO RISER 9 INFO ON PS107.
7. REFER TO RISER 10 INFO ON PS107.
8. REFER TO RISER 11 INFO ON PS107.
9. REFER TO RISER 12 INFO ON PS108.
10. REFER TO RISER 14 INFO ON PS111.
11. REFER TO RISER 15 INFO ON PS111.

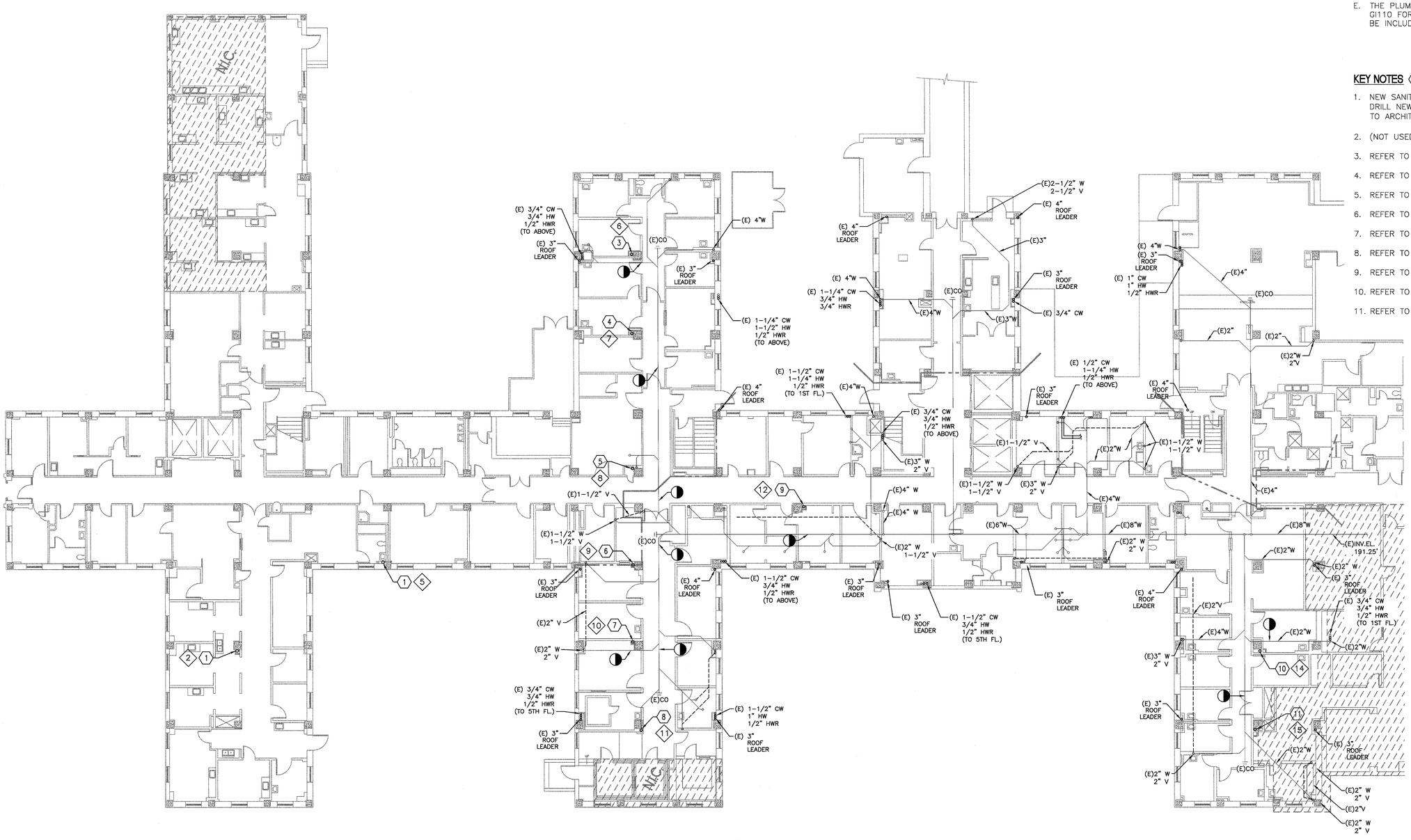

F1 PARTIAL FLOOR PLAN
3/32" = 1'-0"

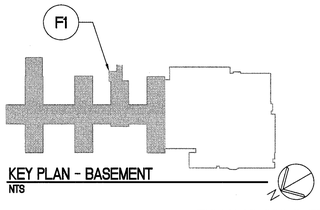

KEY PLAN - BASEMENT
NTS

FULLY SPRINKLERED
BID DOCUMENTS - FOR CONSTRUCTION

Revisions	Date

CONSULTANTS:

STATE OF MICHIGAN
BLAINE CAMREL VAN GANSBEEKE
ENGINEER
No. 6201056550
LICENSED PROFESSIONAL ENGINEER

ARCHITECT/ENGINEERS:

PARADIGM
ENGINEERS AND CONSTRUCTORS
200 Envoy Circle #201, Louisville KY 40299 – PH: 502.339.8511 – www.paradigmusa.com

Drawing Title	PLUMBING DEMOLITION PLAN BASEMENT
Approved Project Director	
Project Title	RENOVATE 25 BED MEDICAL SURGICAL INPATIENT UNIT
Location	FAYETTEVILLE VAMC, 2300 RAMSEY ST, FAYETTEVILLE, NC 28304
Date	09-10-2014
Checked	KLP
Drawn	JDM
Project Number	565-13-103
Building Number	1
Drawing Number	PD100

Office of Construction and Facilities Management
Department of Veterans Affairs

VA FORM 08-6231

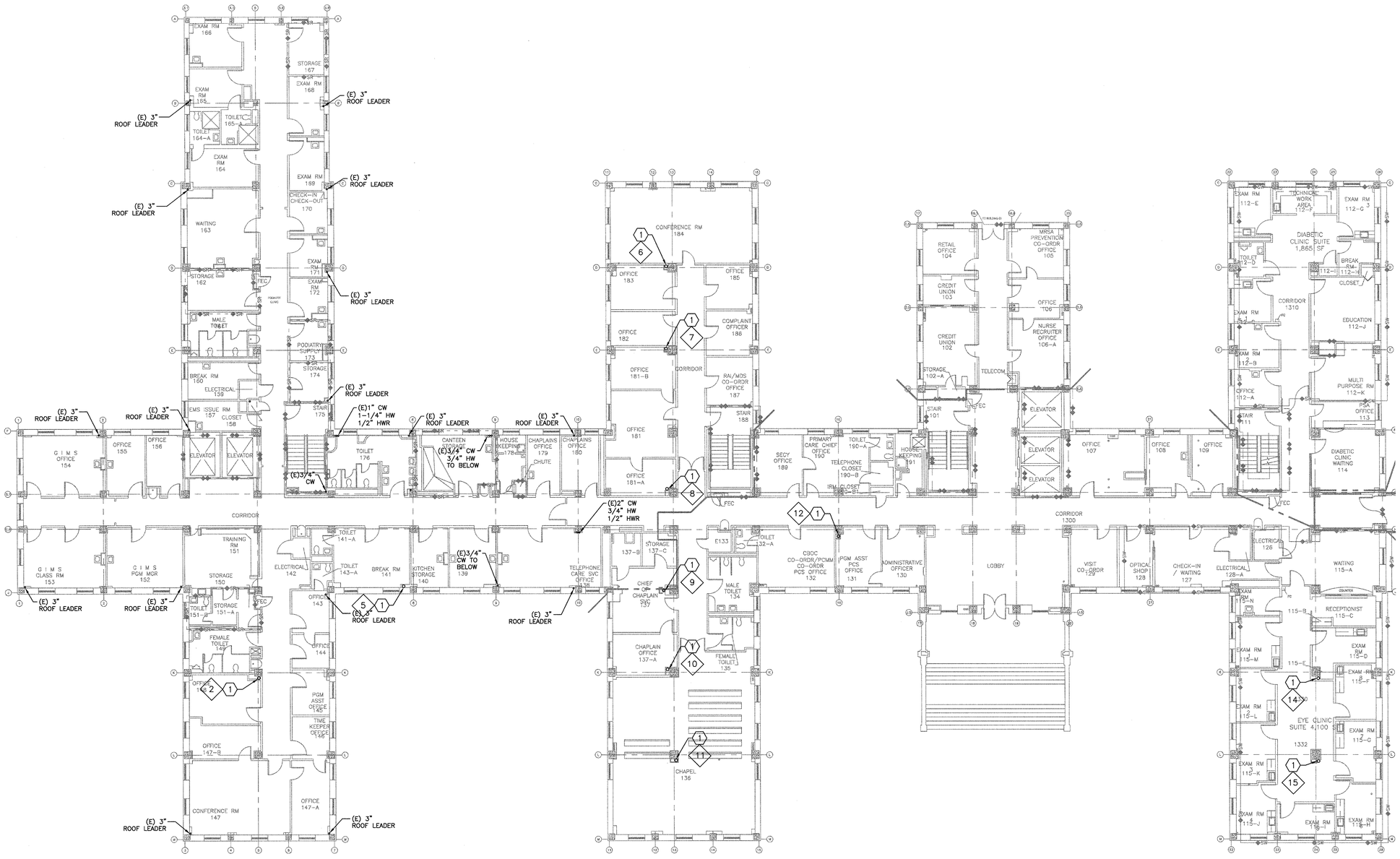

F1 PARTIAL FLOOR PLAN
3/32" = 1'-0"

NOTES

A. REFER TO DWG. P-001 FOR LEGEND, ABBREVIATIONS, AND GENERAL NOTES RELATED TO THIS SHEET.

B. ALL EXISTING PIPING, DUCTWORK, SPRINKLERS, CONDUIT, LIGHTING OR OTHER CONSTRUCTION SHALL BE RELOCATED AS REQUIRED FOR ALL DEMOLITION AND INSTALLATION WORK.

C. REFER TO PP101 FOR NEW PLUMBING ON THE FIRST FLOOR.

D. THE CONTRACTOR SHALL LOCATE ALL NEW CONCRETE PENETRATIONS SUCH THAT THE PENETRATION DOES NOT OCCUR IN A CONCRETE BEAM OR PAN RIB.

E. THE PLUMBING CONTRACTOR SHALL REFERENCE DRAWINGS GI102 TO GI110 FOR PHASING REQUIREMENTS OF PROJECT. PHASING SHALL BE INCLUDED IN BASE BID.

KEY NOTES

1. NEW SANITARY RISER TO BE INSTALLED AT THIS LOCATION. CORE DRILL NEW PENETRATION AND REWORK SHAFT ACCORDINGLY; REFER TO ARCHITECTURAL AND SANITARY DRAWINGS FOR INFORMATION.
2. REFER TO RISER 2 INFO ON PS102.
3. REFER TO RISER 5 INFO ON PS105.
4. REFER TO RISER 6 INFO ON PS106.
5. REFER TO RISER 7 INFO ON PS106.
6. REFER TO RISER 8 INFO ON PS106.
7. REFER TO RISER 9 INFO ON PS107.
8. REFER TO RISER 10 INFO ON PS107.
9. REFER TO RISER 11 INFO ON PS107.
10. REFER TO RISER 12 INFO ON PS108.
11. REFER TO RISER 14 INFO ON PS111.
12. REFER TO RISER 15 INFO ON PS111.

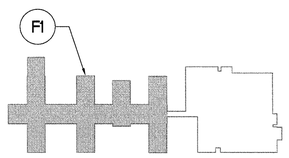

KEY PLAN - FIRST FLOOR
NTS

FULLY SPRINKLERED
BID DOCUMENTS - FOR CONSTRUCTION

Revisions:	Date

CONSULTANTS:

STATE OF MICHIGAN — BLAINE CAMIEL VAN GANSBEKE — ENGINEER — No. 6201056555 — LICENSED PROFESSIONAL ENGINEER — 10 Sept 2014

ARCHITECT/ENGINEERS:

PARADIGM
ENGINEERS AND CONSTRUCTORS
200 Envoy Circle #201, Louisville KY 40299 – PH: 502.339.8511 – www.paradigmusa.com

Drawing Title	PLUMBING DEMOLITION PLAN FIRST FLOOR
Approved Project Director	
Project Title	RENOVATE 25 BED MEDICAL SURGICAL INPATIENT UNIT
Location	FAYETTEVILLE VAMC, 2300 RAMSEY ST, FAYETTEVILLE, NC 28304
Date	09-10-2014
Checked	KLP
Drawn	JDM
Project Number	565-13-103
Building Number	1
Drawing Number	PD101

Office of Construction and Facilities Management
Department of Veterans Affairs

VA FORM 08-6231

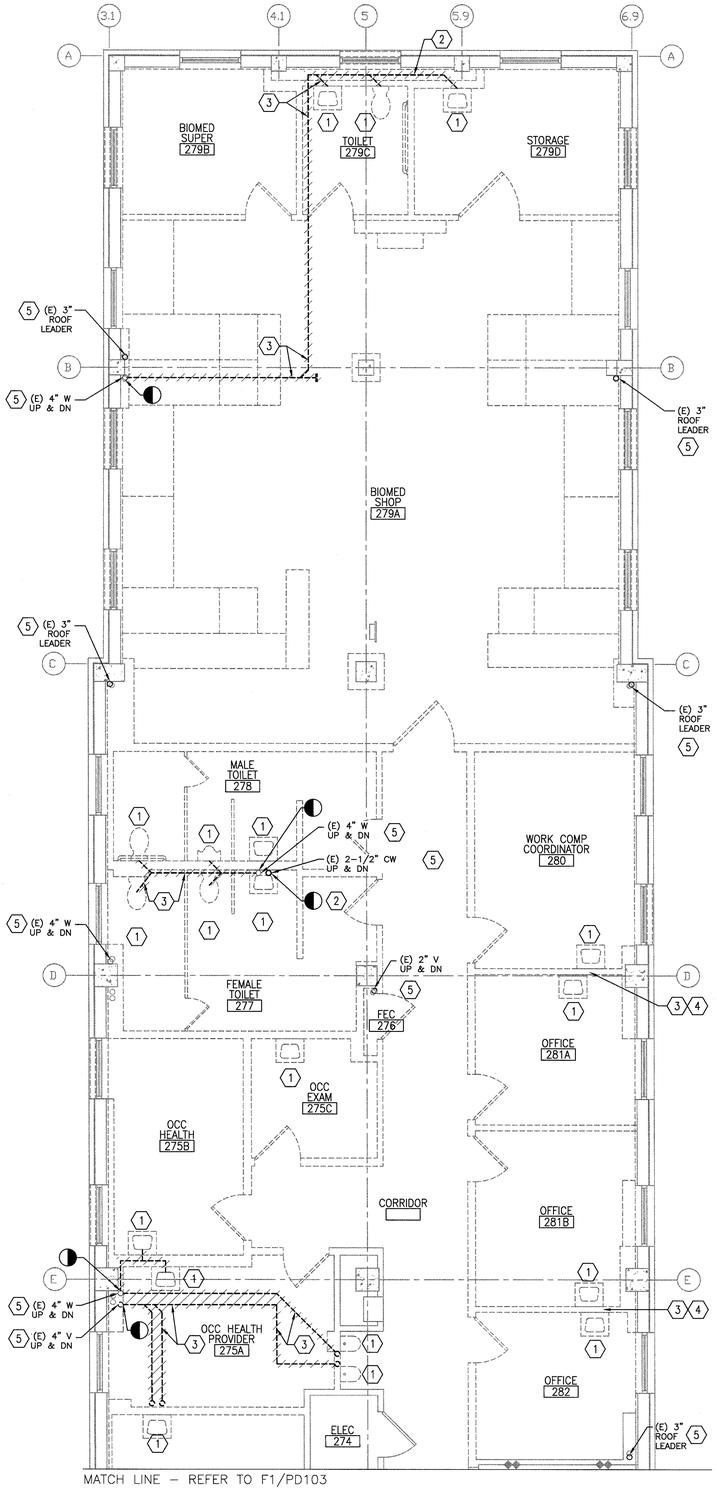

F3 SECOND FLOOR DEMOLITION PLAN - WING A
1/4" = 1'-0"

NOTES

A. REFER TO DWG. P-001 FOR LEGEND, ABBREVIATIONS, AND GENERAL NOTES RELATED TO THIS SHEET.

B. ALL EXISTING PIPING, DUCTWORK, SPRINKLERS, CONDUIT, LIGHTING OR OTHER CONSTRUCTION SHALL BE RELOCATED AS REQUIRED FOR ALL DEMOLITION AND INSTALLATION WORK.

C. ALL EXISTING FIXTURES SHOWN TO BE REMOVED SHALL HAVE ALL WASTE, VENT, HOT WATER, AND COLD WATER REMOVED BACK TO MAIN/RISER AND CAPPED; REFER TO PS SERIES SHEETS FOR NEW WASTE AND VENT WORK.

D. CAP ALL WASTE IN CEILING SPACE BELOW FLOOR UNLESS NOTED OTHERWISE.

E. REFER TO PP102 FOR NEW PLUMBING ON THE SECOND FLOOR.

F. THE CONTRACTOR SHALL LOCATE ALL NEW CONCRETE PENETRATIONS SUCH THAT THE PENETRATION DOES NOT OCCUR IN A CONCRETE BEAM OR PAN RIB.

G. THE PLUMBING CONTRACTOR SHALL REFERENCE DRAWINGS GI102 TO GI110 FOR PHASING REQUIREMENTS OF PROJECT. PHASING SHALL BE INCLUDED IN BASE BID.

KEY NOTES

1. EXISTING PLUMBING FIXTURE TO BE REMOVED.
2. EXISTING HW AND CW PIPING TO BE REMOVED.
3. EXISTING SANITARY AND VENT PIPING TO BE REMOVED.
4. CAP EXISTING HW AND CW BELOW FLOOR.
5. EXISTING PIPING TO BE OFFSET BUT RISERS TO REMAIN ACTIVE

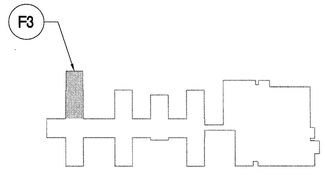

KEY PLAN - SECOND FLOOR
NTS

FULLY SPRINKLERED
BID DOCUMENTS - FOR CONSTRUCTION

Revisions:	Date

CONSULTANTS:

STATE OF MICHIGAN
BLAINE CAMIEL VAN GANSBEKE
ENGINEER
No. 6201056650
LICENSED PROFESSIONAL ENGINEER
9-10-2014

ARCHITECT/ENGINEERS:

PARADIGM
ENGINEERS AND CONSTRUCTORS
200 Envoy Circle #201, Louisville KY 40299 – PH: 502.339.8511 – www.paradigmusa.com

Drawing Title	PLUMBING DEMOLITION PLAN SECOND FLOOR WING A
Approved Project Director	
Project Title	RENOVATE 25 BED MEDICAL SURGICAL INPATIENT UNIT
Location	FAYETTEVILLE VAMC 2300 RAMSEY ST., FAYETTEVILLE, NC 28304
Date	09-10-2014
Checked	KLP
Drawn	JDM
Project Number	565-13-103
Building Number	1
Drawing Number	PD102

Office of Construction and Facilities Management
Department of Veterans Affairs

VA FORM 08-6231

NOTES

A. REFER TO DWG. P-001 FOR LEGEND, ABBREVIATIONS, AND GENERAL NOTES RELATED TO THIS SHEET.

B. ALL EXISTING PIPING, DUCTWORK, SPRINKLERS, CONDUIT, LIGHTING OR OTHER CONSTRUCTION SHALL BE RELOCATED AS REQUIRED FOR ALL DEMOLITION AND INSTALLATION WORK.

C. ALL EXISTING FIXTURES SHOWN TO BE REMOVED SHALL HAVE ALL WASTE, VENT, HOT WATER, AND COLD WATER REMOVED BACK TO MAIN/RISER AND CAPPED; REFER TO PS SERIES SHEETS FOR NEW WASTE AND VENT WORK.

D. CAP ALL WASTE IN CEILING SPACE BELOW FLOOR UNLESS NOTED OTHERWISE.

E. REFER TO PP102 FOR NEW PLUMBING ON THE SECOND FLOOR.

F. THE CONTRACTOR SHALL LOCATE ALL NEW CONCRETE PENETRATIONS SUCH THAT THE PENETRATION DOES NOT OCCUR IN A CONCRETE BEAM OR PAN RIB.

G. THE PLUMBING CONTRACTOR SHALL REFERENCE DRAWINGS GI102 TO GI110 FOR PHASING REQUIREMENTS OF PROJECT. PHASING SHALL BE INCLUDED IN BASE BID.

KEY NOTES

1. EXISTING PLUMBING FIXTURE TO BE REMOVED.
2. EXISTING HW AND CW PIPING TO BE REMOVED.
3. EXISTING SANITARY AND VENT PIPING TO BE REMOVED.
4. CAP EXISTING HW AND CW BELOW FLOOR.
5. EXISTING PIPING TO BE OFFSET BUT RISERS TO REMAIN ACTIVE

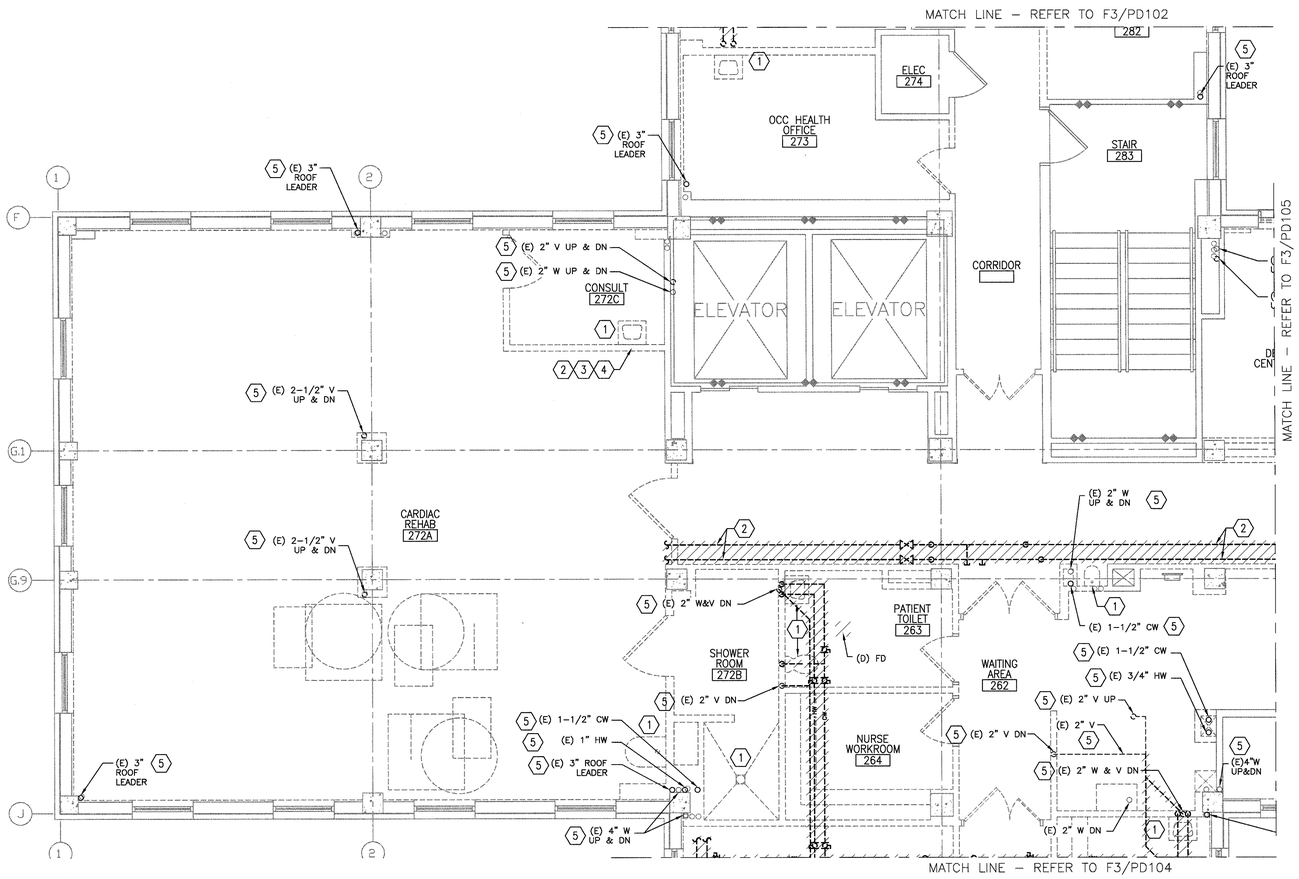

F1 SECOND FLOOR DEMOLITION PLAN - WING A
1/4" = 1'-0"

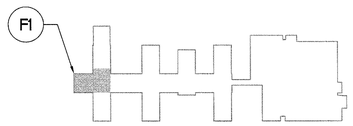

KEY PLAN - SECOND FLOOR
NTS

FULLY SPRINKLERED
BID DOCUMENTS - FOR CONSTRUCTION

Revisions	Date

CONSULTANTS:

STATE OF MICHIGAN
BLAINE CAMIEL VAN GANSREKE
ENGINEER
No. 6201056550
LICENSED PROFESSIONAL ENGINEER

ARCHITECT/ENGINEERS:

PARADIGM
ENGINEERS AND CONSTRUCTORS
200 Envoy Circle #201, Louisville KY 40299 – PH: 502.339.8511 – www.paradigmusa.com

Drawing Title: PLUMBING DEMOLITION PLAN SECOND FLOOR WING A	Project Title: RENOVATE 25 BED MEDICAL SURGICAL INPATIENT UNIT	Project Number: 565-13-103	Office of Construction and Facilities Management
Approved Project Director	Location: FAYETTEVILLE VAMC, 2300 RAMSEY ST, FAYETTEVILLE, NC 28304	Building Number: 1	
	Date: 09-10-2014 / Checked: KLP / Drawn: JDM	Drawing Number: PD103	Department of Veterans Affairs

VA FORM 08-6231

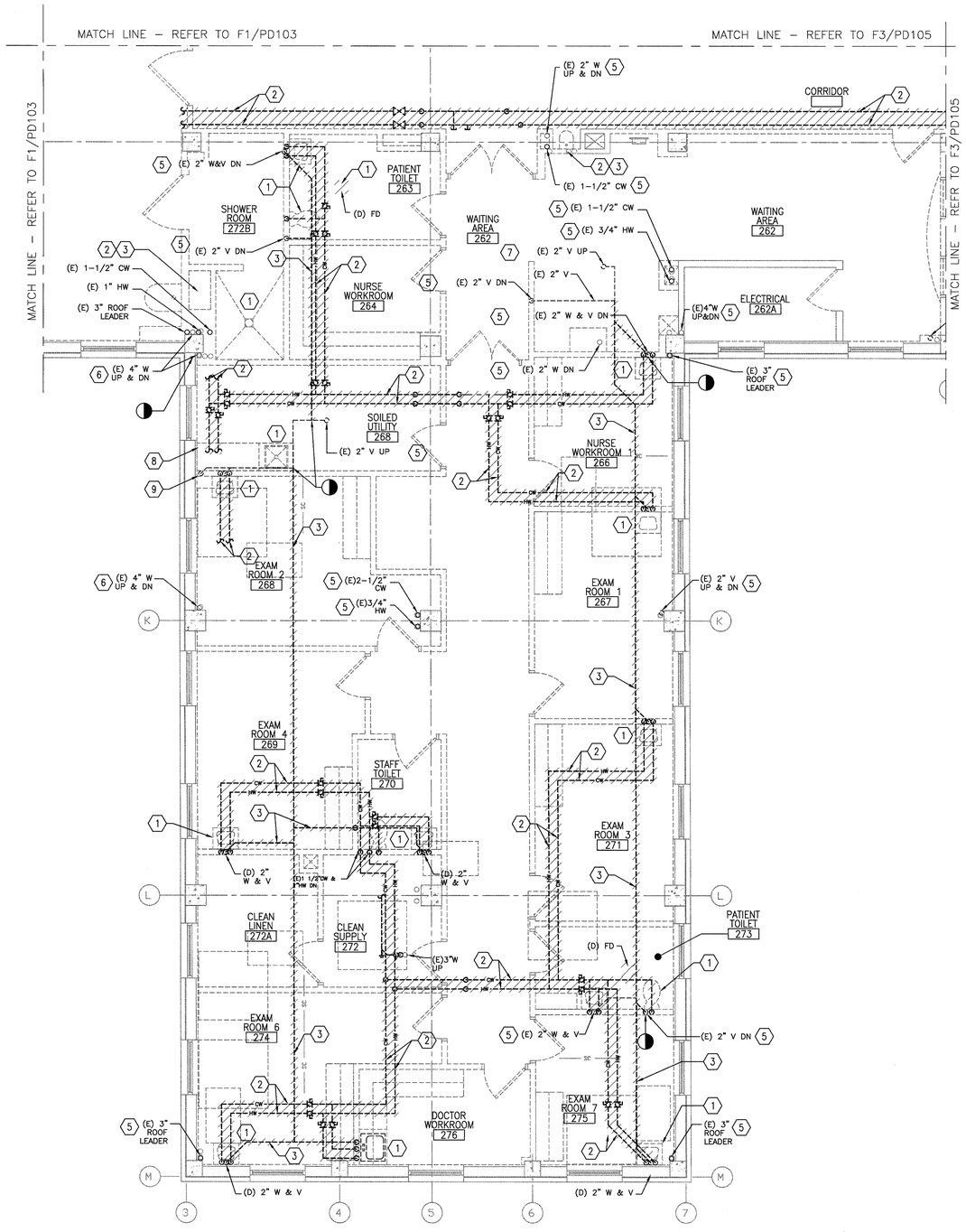

F3 SECOND FLOOR DEMOLITION PLAN - WING A
1/4" = 1'-0"

NOTES

A. REFER TO DWG. P-001 FOR LEGEND, ABBREVIATIONS, AND GENERAL NOTES RELATED TO THIS SHEET.

B. ALL EXISTING PIPING, DUCTWORK, SPRINKLERS, CONDUIT, LIGHTING OR OTHER CONSTRUCTION SHALL BE RELOCATED AS REQUIRED FOR ALL DEMOLITION AND INSTALLATION WORK.

C. ALL EXISTING FIXTURES SHOWN TO BE REMOVED SHALL HAVE ALL WASTE, VENT, HOT WATER, AND COLD WATER REMOVED BACK TO MAIN/RISER AND CAPPED; REFER TO PS SERIES SHEETS FOR NEW WASTE AND VENT WORK.

D. CAP ALL WASTE IN CEILING SPACE BELOW FLOOR UNLESS NOTED OTHERWISE.

E. REFER TO PP102 FOR NEW PLUMBING ON THE SECOND FLOOR.

F. THE CONTRACTOR SHALL LOCATE ALL NEW CONCRETE PENETRATIONS SUCH THAT THE PENETRATION DOES NOT OCCUR IN A CONCRETE BEAM OR PAN RIB.

G. THE PLUMBING CONTRACTOR SHALL REFERENCE DRAWINGS GI102 TO GI110 FOR PHASING REQUIREMENTS OF PROJECT. PHASING SHALL BE INCLUDED IN BASE BID.

KEY NOTES

1. EXISTING PLUMBING FIXTURE TO BE REMOVED.
2. EXISTING HW AND CW PIPING TO BE REMOVED.
3. EXISTING SANITARY AND VENT PIPING TO BE REMOVED.
4. CAP EXISTING HW AND CW BELOW FLOOR.
5. EXISTING PIPING TO BE OFFSET BUT RISERS TO REMAIN ACTIVE.
6. EXISTING 4" WASTE RISER TO REMAIN.
7. EXISTING 2" VENT RISER THRU SLAB ABOVE AND IN CEILING OF FIRST FLOOR BELOW.
8. EXISTING 2" VENT IN CEILING OF FIRST FLOOR BELOW.
9. EXISTING 2" VENT RISER FROM BELOW.

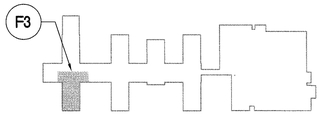

KEY PLAN - SECOND FLOOR
NTS

FULLY SPRINKLERED
BID DOCUMENTS - FOR CONSTRUCTION

Revisions:	Date

CONSULTANTS:

10-6-2014
STATE OF MICHIGAN
BLAINE CAMIEL VAN GANSBEKE
ENGINEER
No 6201056550
LICENSED PROFESSIONAL ENGINEER

ARCHITECT/ENGINEERS:

PARADIGM
ENGINEERS AND CONSTRUCTORS
200 Envoy Circle #201, Louisville KY 40299 – PH: 502.339.8511 – www.paradigmusa.com

Drawing Title	PLUMBING DEMOLITION PLAN SECOND FLOOR WING A
Approved Project Director	
Project Title	RENOVATE 25 BED MEDICAL SURGICAL INPATIENT UNIT
Location	FAYETTEVILLE VAMC 2300 RAMSEY ST., FAYETTEVILLE, NC 28304
Date	09-10-2014
Checked	KLP
Drawn	JDM
Project Number	565-13-103
Building Number	1
Drawing Number	PD104

Office of Construction and Facilities Management
Department of Veterans Affairs

VA FORM 08-6231

NOTES

A. REFER TO DWG. P-001 FOR LEGEND, ABBREVIATIONS, AND GENERAL NOTES RELATED TO THIS SHEET.

B. ALL EXISTING PIPING, DUCTWORK, SPRINKLERS, CONDUIT, LIGHTING OR OTHER CONSTRUCTION SHALL BE RELOCATED AS REQUIRED FOR ALL DEMOLITION AND INSTALLATION WORK.

C. ALL EXISTING FIXTURES SHOWN TO BE REMOVED SHALL HAVE ALL WASTE, VENT, HOT WATER, AND COLD WATER REMOVED BACK TO MAIN/RISER AND CAPPED; REFER TO PS SERIES SHEETS FOR NEW WASTE AND VENT WORK.

D. CAP ALL WASTE IN CEILING SPACE BELOW FLOOR UNLESS NOTED OTHERWISE.

E. REFER TO PP102 FOR NEW PLUMBING ON THE SECOND FLOOR.

F. THE CONTRACTOR SHALL LOCATE ALL NEW CONCRETE PENETRATIONS SUCH THAT THE PENETRATION DOES NOT OCCUR IN A CONCRETE BEAM OR PAN RIB.

G. THE PLUMBING CONTRACTOR SHALL REFERENCE DRAWINGS GI102 TO GI110 FOR PHASING REQUIREMENTS OF PROJECT. PHASING SHALL BE INCLUDED IN BASE BID.

KEY NOTES

1. EXISTING PLUMBING FIXTURE TO BE REMOVED.
2. EXISTING HW AND CW PIPING TO BE REMOVED.
3. EXISTING SANITARY AND VENT PIPING TO BE REMOVED.
4. CAP EXISTING HW AND CW BELOW FLOOR.
5. EXISTING PIPING TO BE OFFSET BUT RISERS TO REMAIN ACTIVE

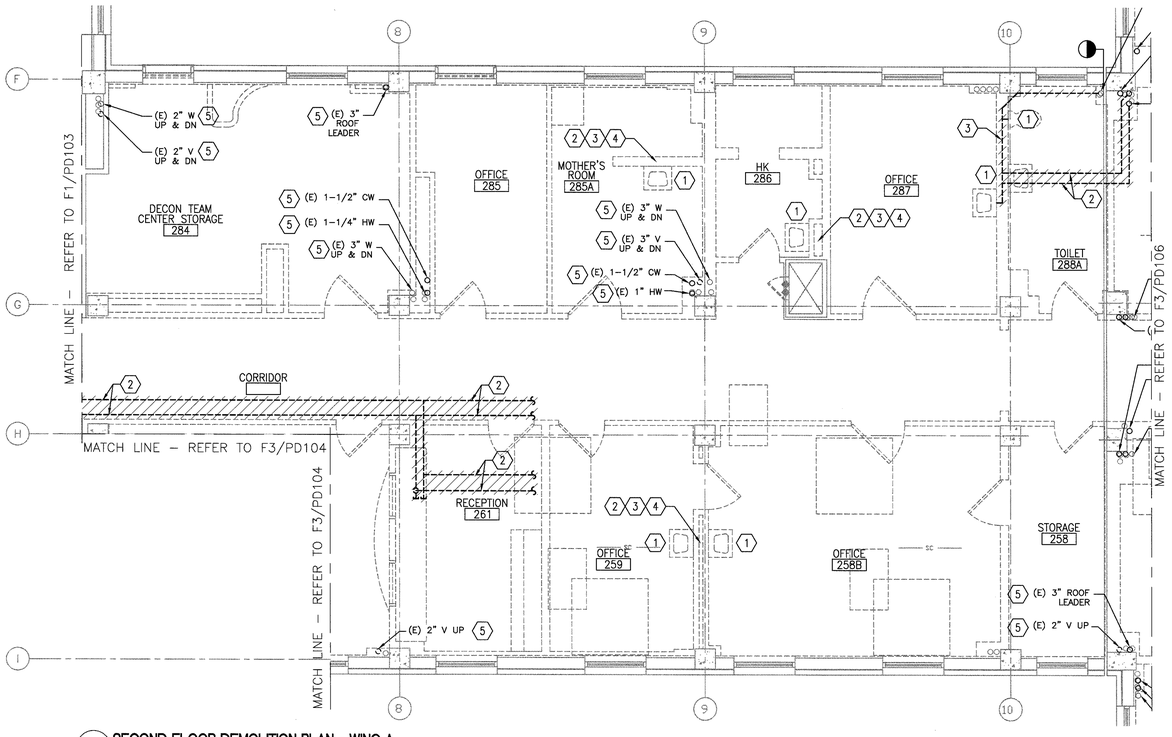

F3 SECOND FLOOR DEMOLITION PLAN - WING A
1/4" = 1'-0"

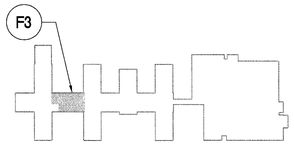

KEY PLAN - SECOND FLOOR
NTS

FULLY SPRINKLERED
BID DOCUMENTS - FOR CONSTRUCTION

Revisions	Date

CONSULTANTS:

10 Sept 2014
STATE OF MICHIGAN
BLAINE CAMIEL VAN GANSBEKE
ENGINEER No. 6201056550
PROFESSIONAL ENGINEER

ARCHITECT/ENGINEERS:
PARADIGM
ENGINEERS AND CONSTRUCTORS
200 Envoy Circle #201, Louisville KY 40299 – Ph: 502.339.8511 – www.paradigmusa.com

Drawing Title	PLUMBING DEMOLITION PLAN SECOND FLOOR WING A
Approved Project Director	
Project Title	RENOVATE 25 BED MEDICAL SURGICAL INPATIENT UNIT
Location	FAYETTEVILLE VAMC 2300 RAMSEY ST., FAYETTEVILLE, NC 28304
Date	09-10-2014
Checked	KLP
Drawn	JDM
Project Number	565-13-103
Building Number	1
Drawing Number	PD105

Office of Construction and Facilities Management
Department of Veterans Affairs

VA FORM 08-6231

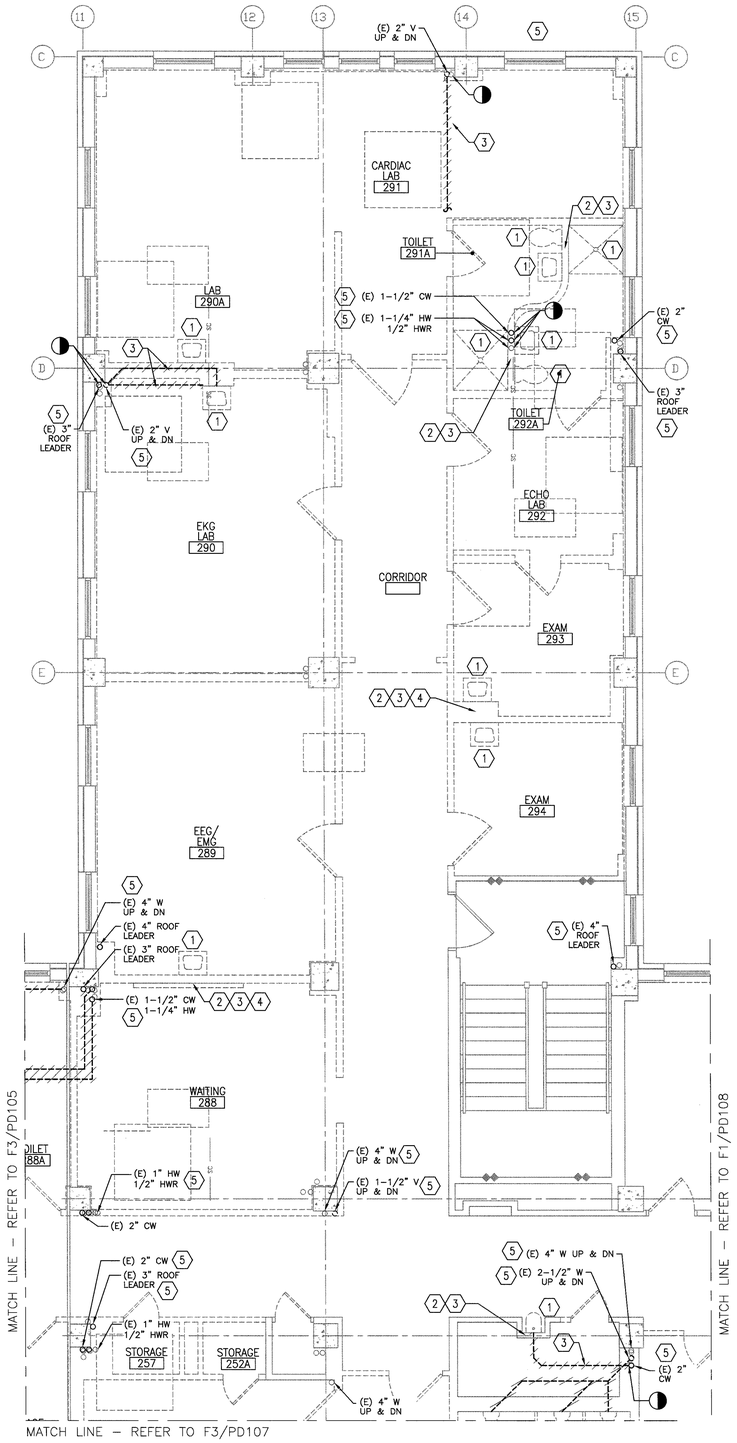

F3 SECOND FLOOR DEMOLITION PLAN - WING B
1/4" = 1'-0"

NOTES

A. REFER TO DWG. P-001 FOR LEGEND, ABBREVIATIONS, AND GENERAL NOTES RELATED TO THIS SHEET.

B. ALL EXISTING PIPING, DUCTWORK, SPRINKLERS, CONDUIT, LIGHTING OR OTHER CONSTRUCTION SHALL BE RELOCATED AS REQUIRED FOR ALL DEMOLITION AND INSTALLATION WORK.

C. ALL EXISTING FIXTURES SHOWN TO BE REMOVED SHALL HAVE ALL WASTE, VENT, HOT WATER, AND COLD WATER REMOVED BACK TO MAIN/RISER AND CAPPED; REFER TO PS SERIES SHEETS FOR NEW WASTE AND VENT WORK.

D. CAP ALL WASTE IN CEILING SPACE BELOW FLOOR UNLESS NOTED OTHERWISE.

E. REFER TO PP102 FOR NEW PLUMBING ON THE SECOND FLOOR.

F. THE CONTRACTOR SHALL LOCATE ALL NEW CONCRETE PENETRATIONS SUCH THAT THE PENETRATION DOES NOT OCCUR IN A CONCRETE BEAM OR PAN RIB.

G. THE PLUMBING CONTRACTOR SHALL REFERENCE DRAWINGS GI102 TO GI110 FOR PHASING REQUIREMENTS OF PROJECT. PHASING SHALL BE INCLUDED IN BASE BID.

KEY NOTES

1. EXISTING PLUMBING FIXTURE TO BE REMOVED.
2. EXISTING HW AND CW PIPING TO BE REMOVED.
3. EXISTING SANITARY AND VENT PIPING TO BE REMOVED.
4. CAP EXISTING HW AND CW BELOW FLOOR.
5. EXISTING PIPING TO BE OFFSET BUT RISERS TO REMAIN ACTIVE

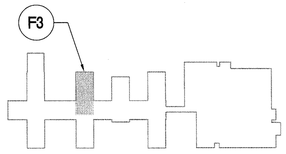

KEY PLAN - SECOND FLOOR
NTS

FULLY SPRINKLERED
BID DOCUMENTS - FOR CONSTRUCTION

Revisions:	Date

CONSULTANTS:

STATE OF MICHIGAN
BLAINE CAMIEL VAN GANSBEKE
ENGINEER
No. 6201056550
PROFESSIONAL ENGINEER
6 Oct 2014

ARCHITECT/ENGINEERS:
PARADIGM
ENGINEERS AND CONSTRUCTORS
200 Envoy Circle #201, Louisville KY 40299 – PH: 502.339.8511 – www.paradigmusa.com

Drawing Title	PLUMBING DEMOLITION PLAN SECOND FLOOR WING B
Approved Project Director	
Project Title	RENOVATE 25 BED MEDICAL SURGICAL INPATIENT UNIT
Location	FAYETTEVILLE VAMC 2300 RAMSEY ST., FAYETTEVILLE, NC 28304
Date	09-10-2014
Checked	KLP
Drawn	JDM
Project Number	565-13-103
Building Number	1
Drawing Number	PD106

Office of Construction and Facilities Management
Department of Veterans Affairs

VA FORM 08-6231

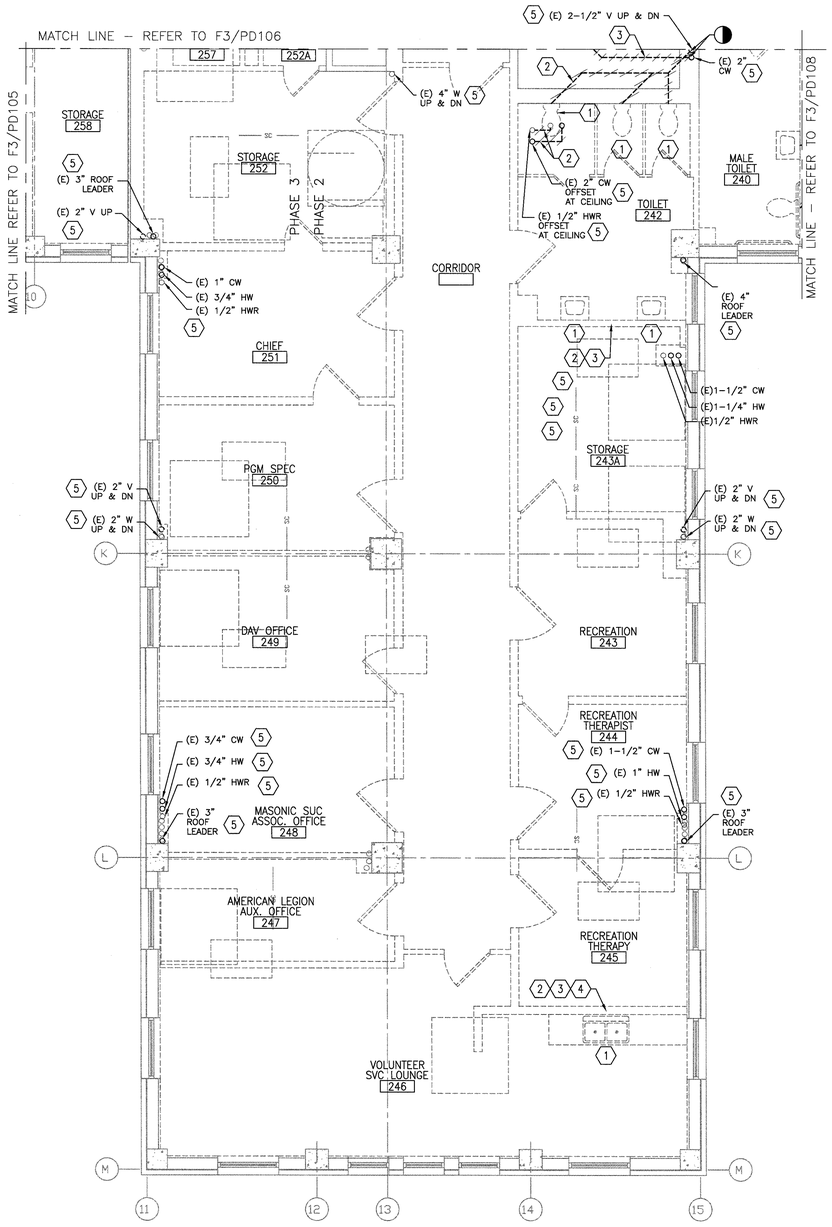

F3 SECOND FLOOR DEMOLITION PLAN - WING B
1/4" = 1'-0"

NOTES

A. REFER TO DWG. P-001 FOR LEGEND, ABBREVIATIONS, AND GENERAL NOTES RELATED TO THIS SHEET.

B. ALL EXISTING PIPING, DUCTWORK, SPRINKLERS, CONDUIT, LIGHTING OR OTHER CONSTRUCTION SHALL BE RELOCATED AS REQUIRED FOR ALL DEMOLITION AND INSTALLATION WORK.

C. ALL EXISTING FIXTURES SHOWN TO BE REMOVED SHALL HAVE ALL WASTE, VENT, HOT WATER, AND COLD WATER REMOVED BACK TO MAIN/RISER AND CAPPED; REFER TO PS SERIES SHEETS FOR NEW WASTE AND VENT WORK.

D. CAP ALL WASTE IN CEILING SPACE BELOW FLOOR UNLESS NOTED OTHERWISE.

E. REFER TO PP102 FOR NEW PLUMBING ON THE SECOND FLOOR.

F. THE CONTRACTOR SHALL LOCATE ALL NEW CONCRETE PENETRATIONS SUCH THAT THE PENETRATION DOES NOT OCCUR IN A CONCRETE BEAM OR PAN RIB.

G. THE PLUMBING CONTRACTOR SHALL REFERENCE DRAWINGS GI102 TO GI110 FOR PHASING REQUIREMENTS OF PROJECT. PHASING SHALL BE INCLUDED IN BASE BID.

KEY NOTES

1. EXISTING PLUMBING FIXTURE TO BE REMOVED.
2. EXISTING HW AND CW PIPING TO BE REMOVED.
3. EXISTING SANITARY AND VENT PIPING TO BE REMOVED.
4. CAP EXISTING HW AND CW BELOW FLOOR.
5. EXISTING PIPING TO BE OFFSET BUT RISERS TO REMAIN ACTIVE

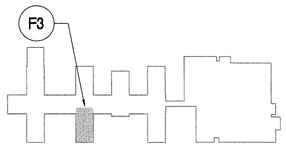

KEY PLAN - SECOND FLOOR
NTS

FULLY SPRINKLERED
BID DOCUMENTS - FOR CONSTRUCTION

Revisions	Date

CONSULTANTS:

10 Sept 2014
STATE OF MICHIGAN
BLAINE CAMIEL VAN GANSBEKE
ENGINEER
No. 6201056550
PROFESSIONAL ENGINEER

ARCHITECT/ENGINEERS:
PARADIGM
ENGINEERS AND CONSTRUCTORS
200 Envoy Circle #201, Louisville KY 40299 – PH: 502.339.8511 – www.paradigmusa.com

Drawing Title	PLUMBING DEMOLITION PLAN SECOND FLOOR WING B
Approved Project Director	
Project Title	RENOVATE 25 BED MEDICAL SURGICAL INPATIENT UNIT
Location	FAYETTEVILLE VAMC 2300 RAMSEY ST., FAYETTEVILLE, NC 28304
Date	09-10-2014
Checked	KLP
Drawn	JDM
Project Number	565-13-103
Building Number	1
Drawing Number	PD107

Office of Construction and Facilities Management
Department of Veterans Affairs

VA FORM 08-6231

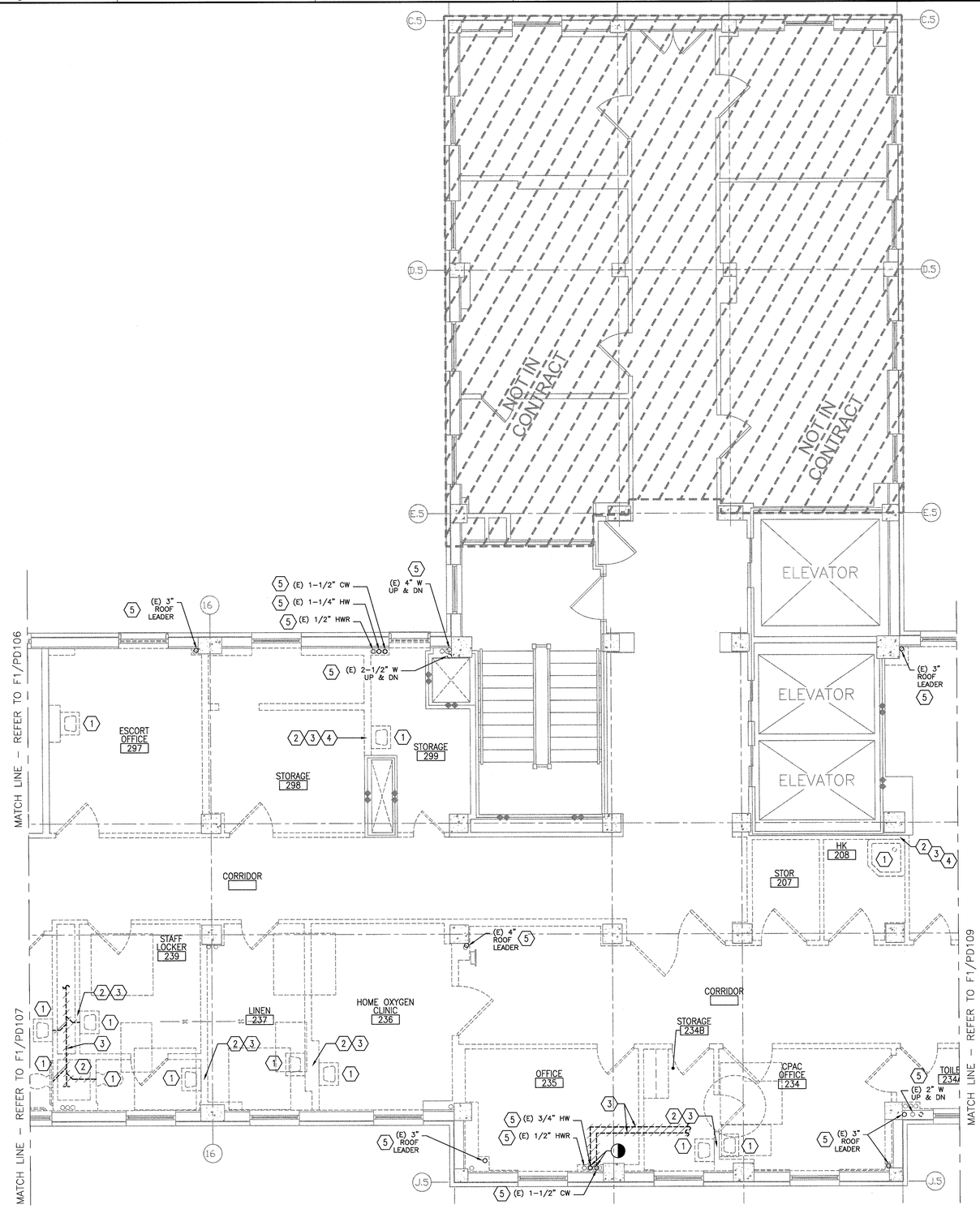

F3 SECOND FLOOR DEMOLITION PLAN - WING B
1/4" = 1'-0"

NOTES

A. REFER TO DWG. P-001 FOR LEGEND, ABBREVIATIONS, AND GENERAL NOTES RELATED TO THIS SHEET.

B. ALL EXISTING PIPING, DUCTWORK, SPRINKLERS, CONDUIT, LIGHTING OR OTHER CONSTRUCTION SHALL BE RELOCATED AS REQUIRED FOR ALL DEMOLITION AND INSTALLATION WORK.

C. ALL EXISTING FIXTURES SHOWN TO BE REMOVED SHALL HAVE ALL WASTE, VENT, HOT WATER, AND COLD WATER REMOVED BACK TO MAIN/RISER AND CAPPED; REFER TO PS SERIES SHEETS FOR NEW WASTE AND VENT WORK.

D. CAP ALL WASTE IN CEILING SPACE BELOW FLOOR UNLESS NOTED OTHERWISE.

E. REFER TO PP102 FOR NEW PLUMBING ON THE SECOND FLOOR.

F. THE CONTRACTOR SHALL LOCATE ALL NEW CONCRETE PENETRATIONS SUCH THAT THE PENETRATION DOES NOT OCCUR IN A CONCRETE BEAM OR PAN RIB.

G. THE PLUMBING CONTRACTOR SHALL REFERENCE DRAWINGS GI102 TO GI110 FOR PHASING REQUIREMENTS OF PROJECT. PHASING SHALL BE INCLUDED IN BASE BID.

KEY NOTES

1. EXISTING PLUMBING FIXTURE TO BE REMOVED.
2. EXISTING HW AND CW PIPING TO BE REMOVED.
3. EXISTING SANITARY AND VENT PIPING TO BE REMOVED.
4. CAP EXISTING HW AND CW BELOW FLOOR.
5. EXISTING PIPING TO BE OFFSET BUT RISERS TO REMAIN ACTIVE

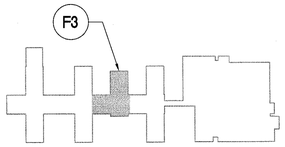

KEY PLAN - SECOND FLOOR
NTS

FULLY SPRINKLERED
BID DOCUMENTS - FOR CONSTRUCTION

Revisions:	Date

CONSULTANTS:

09 Sept 2014
STATE OF MICHIGAN
BLAINE CAMIEL VAN GANSBEKE
ENGINEER No. 6201056550
PROFESSIONAL ENGINEER

ARCHITECT/ENGINEERS:
PARADIGM
ENGINEERS AND CONSTRUCTORS
200 Envoy Circle #201, Louisville KY 40299 – PH: 502.339.8511 – www.paradigmusa.com

Drawing Title: PLUMBING DEMOLITION PLAN SECOND FLOOR WING B

Approved Project Director:

Project Title: RENOVATE 25 BED MEDICAL SURGICAL INPATIENT UNIT

Location: FAYETTEVILLE VAMC, 2300 RAMSEY ST., FAYETTEVILLE, NC 28304

Date: 09-10-2014 | Checked: KLP | Drawn: JDM

Project Number: 565-13-103

Building Number: 1

Drawing Number: PD108

Office of Construction and Facilities Management

Department of Veterans Affairs

VA FORM 08-6231

NOTES

A. REFER TO DWG. P-001 FOR LEGEND, ABBREVIATIONS, AND GENERAL NOTES RELATED TO THIS SHEET.

B. ALL EXISTING PIPING, DUCTWORK, SPRINKLERS, CONDUIT, LIGHTING OR OTHER CONSTRUCTION SHALL BE RELOCATED AS REQUIRED FOR ALL DEMOLITION AND INSTALLATION WORK.

C. ALL EXISTING FIXTURES SHOWN TO BE REMOVED SHALL HAVE ALL WASTE, VENT, HOT WATER, AND COLD WATER REMOVED BACK TO MAIN/RISER AND CAPPED; REFER TO PS SERIES SHEETS FOR NEW WASTE AND VENT WORK.

D. CAP ALL WASTE IN CEILING SPACE BELOW FLOOR UNLESS NOTED OTHERWISE.

E. REFER TO PP102 FOR NEW PLUMBING ON THE SECOND FLOOR.

F. THE CONTRACTOR SHALL LOCATE ALL NEW CONCRETE PENETRATIONS SUCH THAT THE PENETRATION DOES NOT OCCUR IN A CONCRETE BEAM OR PAN RIB.

G. THE PLUMBING CONTRACTOR SHALL REFERENCE DRAWINGS GI102 TO GI110 FOR PHASING REQUIREMENTS OF PROJECT. PHASING SHALL BE INCLUDED IN BASE BID.

KEY NOTES

1. EXISTING PLUMBING FIXTURE TO BE REMOVED.
2. EXISTING HW AND CW PIPING TO BE REMOVED.
3. EXISTING SANITARY AND VENT PIPING TO BE REMOVED.
4. CAP EXISTING HW AND CW BELOW FLOOR.
5. EXISTING PIPING TO BE OFFSET BUT RISERS TO REMAIN ACTIVE

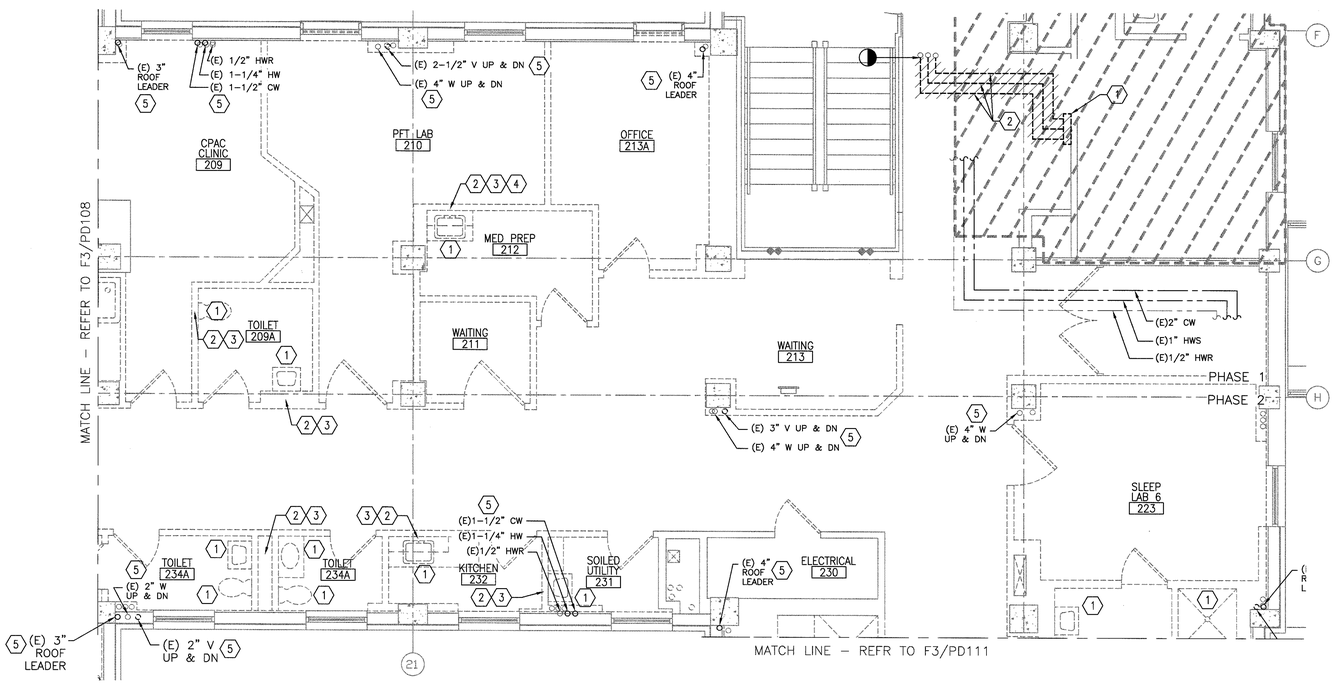

F1 SECOND FLOOR DEMOLITION PLAN - WING C
1/4" = 1'-0"

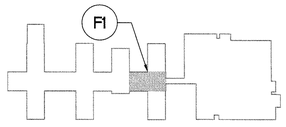

KEY PLAN - SECOND FLOOR
NTS

FULLY SPRINKLERED
BID DOCUMENTS - FOR CONSTRUCTION

Revisions:	Date

CONSULTANTS:

STATE OF MICHIGAN — BLAINE CAMIEL VAN GANSRICKS — ENGINEER — No. E2010-0080 — PROFESSIONAL ENGINEER — 10 Oct 2014

ARCHITECT/ENGINEERS:

PARADIGM ENGINEERS AND CONSTRUCTORS
200 Envoy Circle #201, Louisville KY 40299 – PH: 502.339.8511 – www.paradigmusa.com

Drawing Title	PLUMBING DEMOLITION PLAN SECOND FLOOR WING C
Approved Project Director	
Project Title	RENOVATE 25 BED MEDICAL SURGICAL INPATIENT UNIT
Location	FAYETTEVILLE VAMC 2300 RAMSEY ST, FAYETTEVILLE, NC 28304
Date	09-10-2014
Checked	KLP
Drawn	JDM
Project Number	565-13-103
Building Number	1
Drawing Number	PD109

Office of Construction and Facilities Management
Department of Veterans Affairs

VA FORM 08-6231

NOTES

A. REFER TO DWG. P-001 FOR LEGEND, ABBREVIATIONS, AND GENERAL NOTES RELATED TO THIS SHEET.

B. ALL EXISTING PIPING, DUCTWORK, SPRINKLERS, CONDUIT, LIGHTING OR OTHER CONSTRUCTION SHALL BE RELOCATED AS REQUIRED FOR ALL DEMOLITION AND INSTALLATION WORK.

C. ALL EXISTING FIXTURES SHOWN TO BE REMOVED SHALL HAVE ALL WASTE, VENT, HOT WATER, AND COLD WATER REMOVED BACK TO MAIN/RISER AND CAPPED; REFER TO PS SERIES SHEETS FOR NEW WASTE AND VENT WORK.

D. CAP ALL WASTE IN CEILING SPACE BELOW FLOOR UNLESS NOTED OTHERWISE.

E. REFER TO PP102 FOR NEW PLUMBING ON THE SECOND FLOOR.

F. THE CONTRACTOR SHALL LOCATE ALL NEW CONCRETE PENETRATIONS SUCH THAT THE PENETRATION DOES NOT OCCUR IN A CONCRETE BEAM OR PAN RIB.

G. THE PLUMBING CONTRACTOR SHALL REFERENCE DRAWINGS GI102 TO GI110 FOR PHASING REQUIREMENTS OF PROJECT. PHASING SHALL BE INCLUDED IN BASE BID.

KEY NOTES

1. EXISTING PLUMBING FIXTURE TO BE REMOVED.
2. EXISTING HW AND CW PIPING TO BE REMOVED.
3. EXISTING SANITARY AND VENT PIPING TO BE REMOVED.
4. CAP EXISTING HW AND CW BELOW FLOOR.
5. EXISTING PIPING TO BE OFFSET BUT RISERS TO REMAIN ACTIVE

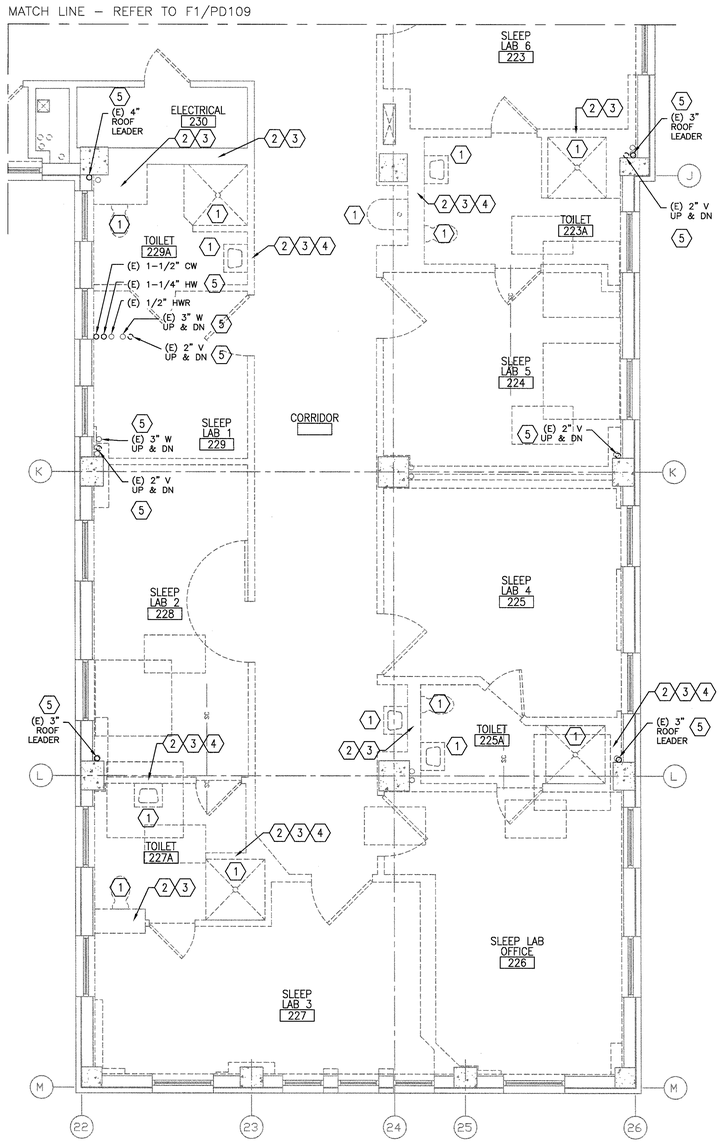

F3 SECOND FLOOR DEMOLITION PLAN - WING C
1/4" = 1'-0"

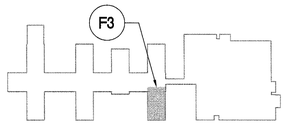

KEY PLAN - SECOND FLOOR
NTS

FULLY SPRINKLERED
BID DOCUMENTS - FOR CONSTRUCTION

Revisions:	Date

CONSULTANTS:

STATE OF MICHIGAN
BLAINE CAMIEL VAN GANSBEKE
ENGINEER
No. 5201056550
LICENSED PROFESSIONAL ENGINEER
6 Oct 2014

ARCHITECT/ENGINEERS:

PARADIGM
ENGINEERS AND CONSTRUCTORS
200 Envoy Circle #201, Louisville KY 40299 – PH: 502.339.8511 – www.paradigmusa.com

Drawing Title	PLUMBING DEMOLITION PLAN SECOND FLOOR WING C
Approved Project Director	
Project Title	RENOVATE 25 BED MEDICAL SURGICAL INPATIENT UNIT
Location	FAYETTEVILLE VAMC 2300 RAMSEY ST., FAYETTEVILLE, NC 28304
Date	09-10-2014
Checked	KLP
Drawn	JDM
Project Number	565-13-103
Building Number	1
Drawing Number	PD111

Office of Construction and Facilities Management
Department of Veterans Affairs

VA FORM 08-6231

NOTES

A. REFER TO DWG. P-001 FOR LEGEND, ABBREVIATIONS, AND GENERAL NOTES RELATED TO THIS SHEET.

B. ALL EXISTING PIPING, DUCTWORK, SPRINKLERS, CONDUIT, LIGHTING OR OTHER CONSTRUCTION SHALL BE RELOCATED AS REQUIRED FOR ALL DEMOLITION AND INSTALLATION WORK.

C. REFER TO PD100 FOR PLUMBING DEMOLITION IN BASEMENT.

D. THE CONTRACTOR SHALL LOCATE ALL NEW CONCRETE PENETRATIONS SUCH THAT THE PENETRATION DOES NOT OCCUR IN A CONCRETE BEAM OR PAN RIB.

E. THE PLUMBING CONTRACTOR SHALL REFERENCE DRAWINGS GI102 TO GI110 FOR PHASING REQUIREMENTS OF PROJECT. PHASING SHALL BE INCLUDED IN BASE BID.

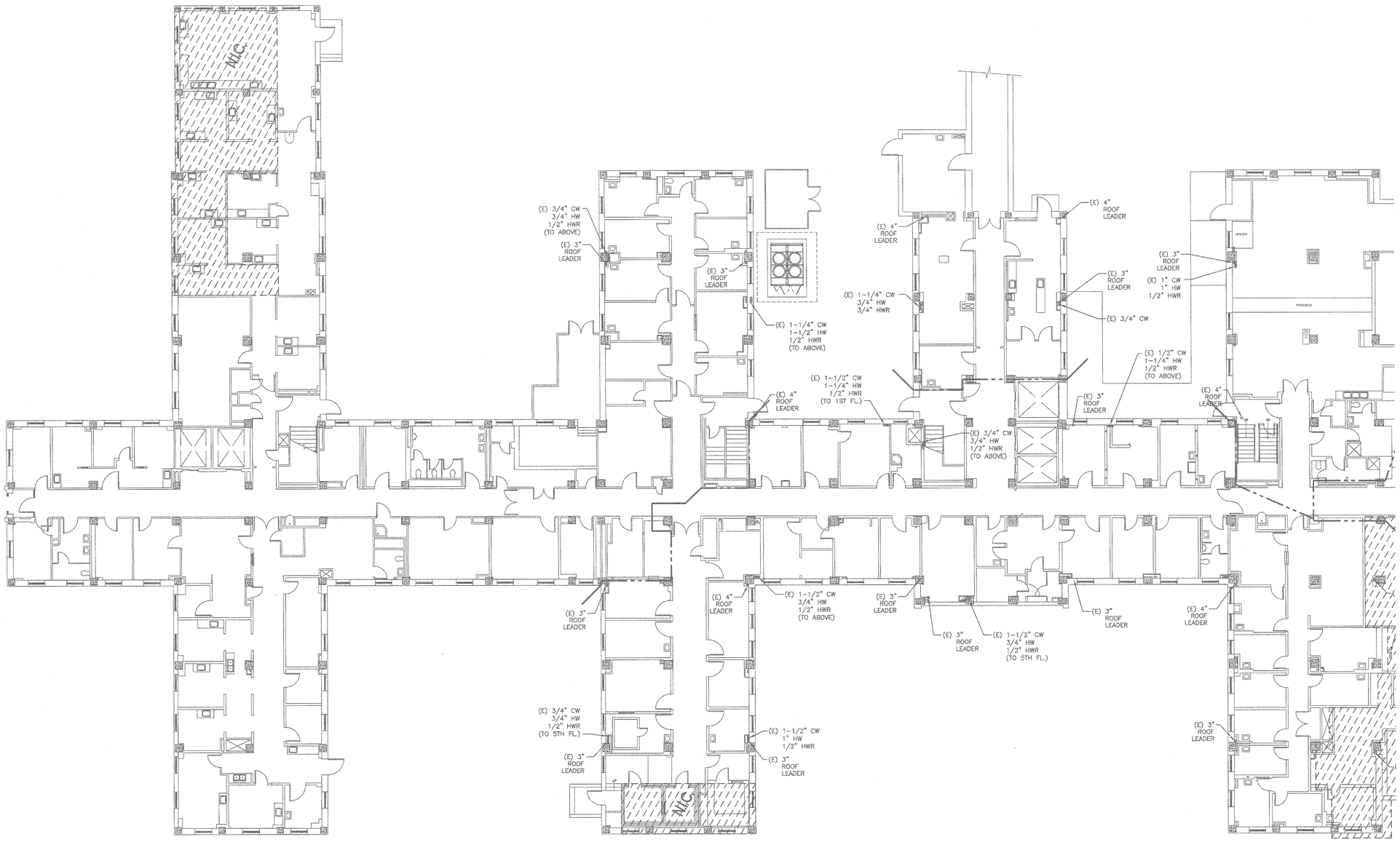

F1 PARTIAL FLOOR PLAN
3/32" = 1'-0"

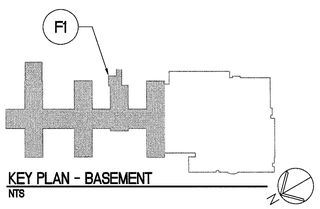

KEY PLAN - BASEMENT
NTS

FULLY SPRINKLERED
BID DOCUMENTS - FOR CONSTRUCTION

Revisions	Date

CONSULTANTS:

10 Sept 2014
STATE OF MICHIGAN
BLAINE CAMIEL VAN GANSBEKE
ENGINEER
No. 6201056550
LICENSED PROFESSIONAL ENGINEER

ARCHITECT/ENGINEERS:

PARADIGM
ENGINEERS AND CONSTRUCTORS
200 Envoy Circle #201, Louisville KY 40299 - PH: 502.339.8511 - www.paradigmusa.com

Drawing Title	PLUMBING PLAN BASEMENT
Approved Project Director	
Project Title	RENOVATE 25 BED MEDICAL SURGICAL INPATIENT UNIT
Location	FAYETTEVILLE VAMC, 2300 RAMSEY ST, FAYETTEVILLE, NC 28304
Date	09-10-2014
Checked	KLP
Drawn	JDM
Project Number	565-13-103
Building Number	1
Drawing Number	PP100

Office of Construction and Facilities Management
Department of Veterans Affairs

VA FORM 08-6231

NOTES

A. REFER TO DWG. P-001 FOR LEGEND, ABBREVIATIONS, AND GENERAL NOTES RELATED TO THIS SHEET.

B. ALL EXISTING PIPING, DUCTWORK, SPRINKLERS, CONDUIT, LIGHTING OR OTHER CONSTRUCTION SHALL BE RELOCATED AS REQUIRED FOR ALL DEMOLITION AND INSTALLATION WORK.

C. REFER TO PD101 FOR PLUMBING DEMOLITION ON THE FIRST FLOOR.

D. THE CONTRACTOR SHALL LOCATE ALL NEW CONCRETE PENETRATIONS SUCH THAT THE PENETRATION DOES NOT OCCUR IN A CONCRETE BEAM OR PAN RIB.

E. THE PLUMBING CONTRACTOR SHALL REFERENCE DRAWINGS GI102 TO GI110 FOR PHASING REQUIREMENTS OF PROJECT. PHASING SHALL BE INCLUDED IN BASE BID.

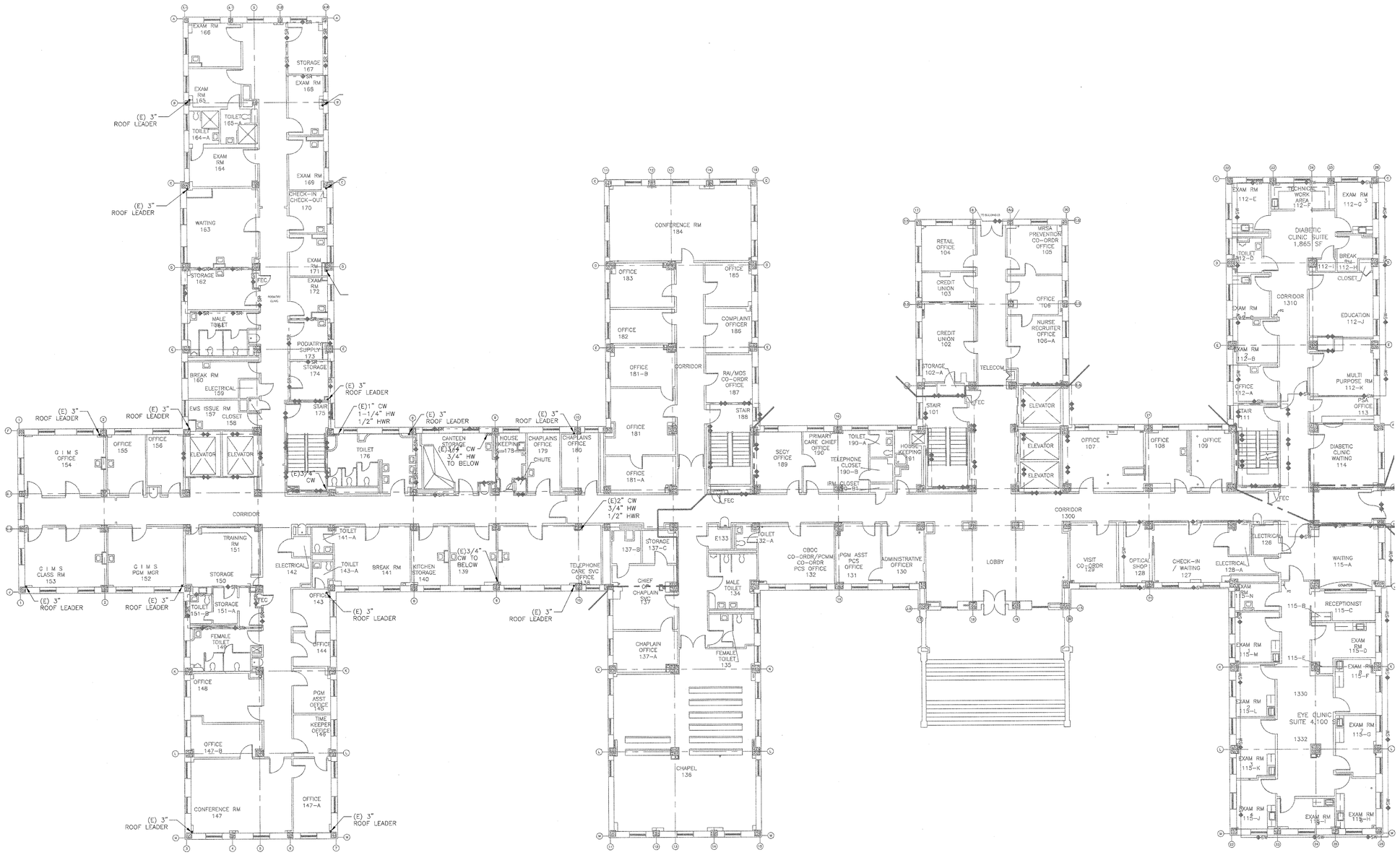

F1 PARTIAL FLOOR PLAN
3/32" = 1'-0"

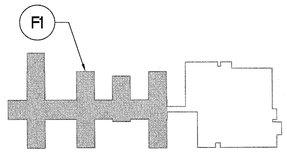

KEY PLAN - FIRST FLOOR
NTS

FULLY SPRINKLERED
BID DOCUMENTS - FOR CONSTRUCTION

Revisions	Date

CONSULTANTS:

STATE OF MICHIGAN — BLAINE CARREL VAN GANSHEKE — ENGINEER No. 6201056555 — PROFESSIONAL ENGINEER

ARCHITECT/ENGINEERS:

PARADIGM ENGINEERS AND CONSTRUCTORS
200 Envoy Circle #201, Louisville KY 40299 – PH: 502.339.8511 – www.paradigmusa.com

Drawing Title	PLUMBING PLAN FIRST FLOOR
Approved Project Director	
Project Title	RENOVATE 25 BED MEDICAL SURGICAL INPATIENT UNIT
Location	FAYETTEVILLE VAMC, 2300 RAMSEY ST, FAYETTEVILLE, NC 28304
Date	09-10-2014
Checked	KLP
Drawn	JDM
Project Number	565-13-103
Building Number	1
Drawing Number	PP101

Office of Construction and Facilities Management
Department of Veterans Affairs

VA FORM 08-6231

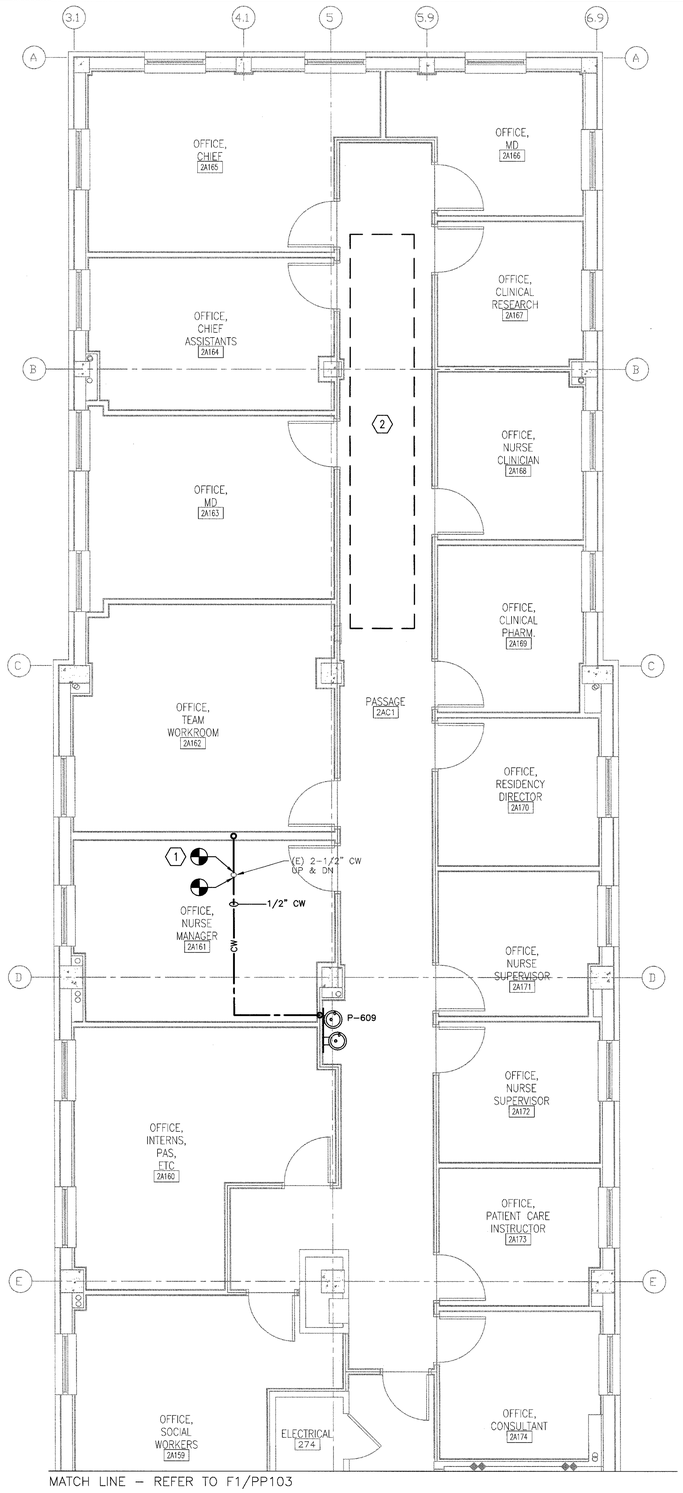

F3 SECOND FLOOR PLAN - WING A
1/4" = 1'-0"

NOTES

A. ALL EXISTING PIPING, DUCTWORK, SPRINKLERS, CONDUIT, LIGHTING OR OTHER CONSTRUCTION SHALL BE RELOCATED AS REQUIRED FOR ALL DEMOLITION AND INSTALLATION WORK.

B. REFER TO P-001 FOR PLUMBING SYMBOLS AND NOTES.

C. REFER TO PD102 FOR PLUMBING DEMOLITION.

D. PROVIDE A SHUTOFF VALVE ON CW, HW, AND HWR AT ALL BRANCHES FROM MAIN WATER LINES IN CORRIDOR.

E. THE CONTRACTOR SHALL LOCATE ALL NEW CONCRETE PENETRATIONS SUCH THAT THE PENETRATION DOES NOT OCCUR IN A CONCRETE BEAM OR PAN RIB.

F. THE PLUMBING CONTRACTOR SHALL REFERENCE DRAWINGS GI102 TO GI110 FOR PHASING REQUIREMENTS OF PROJECT. PHASING SHALL BE INCLUDED IN BASE BID.

KEY NOTES

1. EXISTING LINES TO BE OFFSET BELOW FLOOR AND ABOVE CEILING TO RISE WITHIN WALL. RISER TO REMAIN ACTIVE; AVOID DISRUPTION OF SERVICE.
2. NEW AHU-2AS ON ROOF ABOVE; REFER TO MH112 FOR DETAILS.

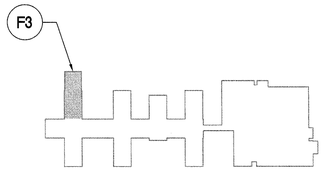

KEY PLAN - SECOND FLOOR
NTS

FULLY SPRINKLERED
BID DOCUMENTS - FOR CONSTRUCTION

Revisions:	Date

CONSULTANTS:

STATE OF MICHIGAN
BLAINE CAMIEL VAN GANSBEKE
ENGINEER
No. 6201056655
LICENSED PROFESSIONAL ENGINEER
10 Oct 2014

ARCHITECT/ENGINEERS:

PARADIGM
ENGINEERS AND CONSTRUCTORS
200 Envoy Circle #201, Louisville KY 40299 – PH: 502.339.8511 – www.paradigmusa.com

Drawing Title: PLUMBING PLAN SECOND FLOOR WING A	Project Title: RENOVATE 25 BED MEDICAL SURGICAL INPATIENT UNIT	Project Number: 565-13-103	Office of Construction and Facilities Management
Approved Project Director	Location: FAYETTEVILLE VAMC, 2300 RAMSEY ST, FAYETTEVILLE, NC 28304	Building Number: 1	
	Date: 09-10-2014 / Checked: KLP / Drawn: JDM	Drawing Number: PP102	Department of Veterans Affairs

VA FORM 08-6231

NOTES

A. ALL EXISTING PIPING, DUCTWORK, SPRINKLERS, CONDUIT, LIGHTING OR OTHER CONSTRUCTION SHALL BE RELOCATED AS REQUIRED FOR ALL DEMOLITION AND INSTALLATION WORK.

B. REFER TO P-001 FOR PLUMBING SYMBOLS AND NOTES.

C. REFER TO PD103 FOR PLUMBING DEMOLITION.

D. PROVIDE A SHUTOFF VALVE ON CW, HW, AND HWR AT ALL BRANCHES FROM MAIN WATER LINES IN CORRIDOR.

E. THE CONTRACTOR SHALL LOCATE ALL NEW CONCRETE PENETRATIONS SUCH THAT THE PENETRATION DOES NOT OCCUR IN A CONCRETE BEAM OR PAN RIB.

F. THE PLUMBING CONTRACTOR SHALL REFERENCE DRAWINGS GI102 TO GI110 FOR PHASING REQUIREMENTS OF PROJECT. PHASING SHALL BE INCLUDED IN BASE BID.

KEY NOTES

1. NEW 3/4" HOT AND COLD WATER TO NEW LAV. PROVIDE NEW SINK WITH P-TRAP, HOT AND COLD WATER ANGLE STOP VALVES WITH ESCUTCHEON PLATES.
2. PROVIDE NEW WATER CLOSETS AND SERVICE SINKS WITH 1-1/4" COLD WATER DOWN TO FLUSH VALVE.
3. NEW 3/4" HOT AND COLD WATER TO NEW SINK. PROVIDE NEW SINK WITH P-TRAP, HOT AND COLD WATER ANGLE STOP VALVES WITH ESCUTCHEON PLATES.
4. PROVIDE NEW HAND SINK WITH 3/4" COLD WATER AND 3/4" HOT WATER. PROVIDE NEW SANITARY 2" DOWN AND 1-1/2" VENT UP WITH NEW P-TRAP ANGLE STOP VALVES AND ESCUTCHEON PLATES.
5. NEW MEDICAL ALARM PANEL PER NFPA 99; REFER TO PP108 FOR ALARM SENSOR LOCATIONS.
6. INSTALL 1/2" BALANCING VALVE AT THE LOCATION INDICATED PER HWR CIRCULATION.
7. EXISTING LINES TO REMAIN.
8. NEW 1/2" COLD WATER TO SERVICE A 3/8" SOFT COPPER WATER FEED TO ICE MACHINE/COFFEE MAKER IN THIS LOCATION. PROVIDE REQUIRED BACKFLOW PREVENTION. MOUNT AT 48" A.F.F.

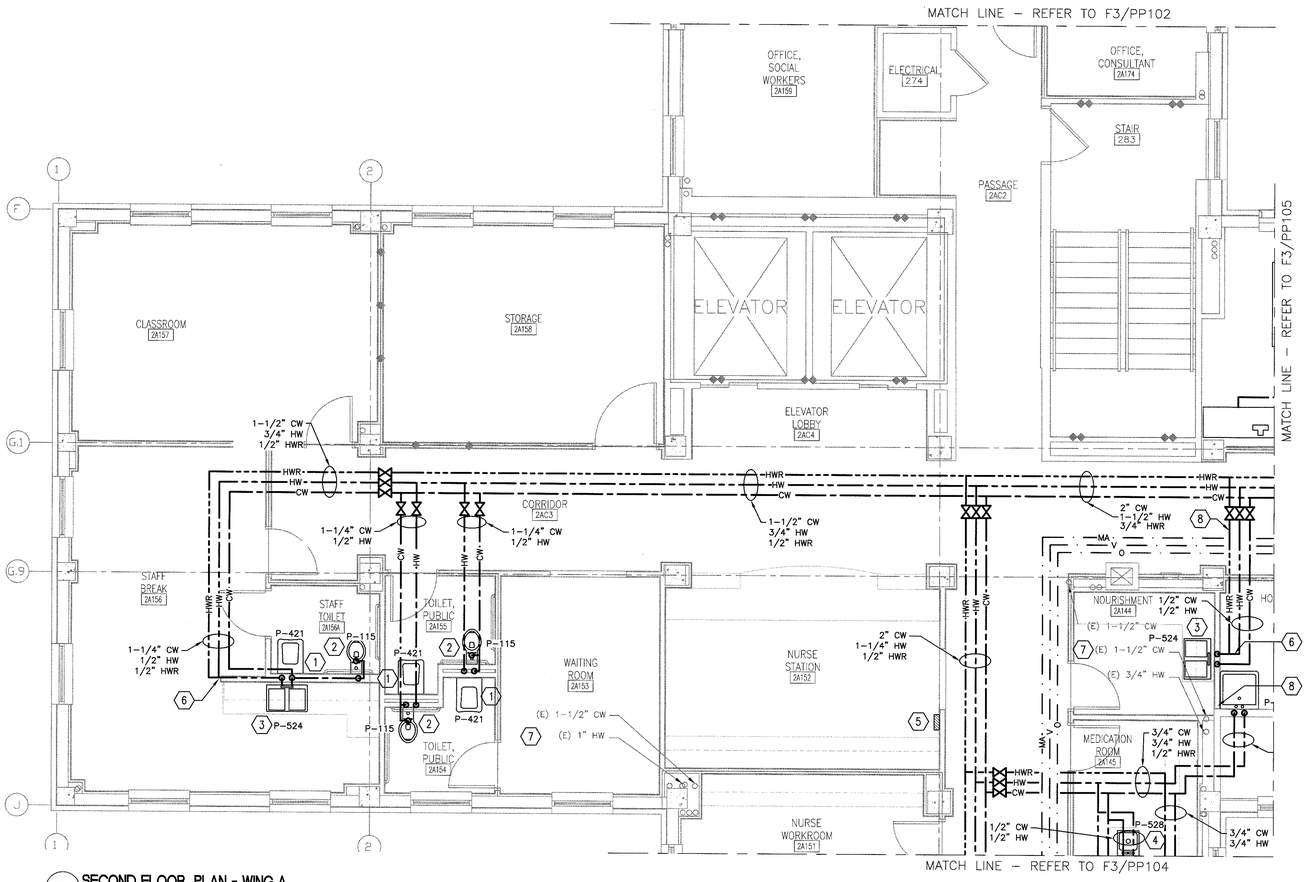

F1 SECOND FLOOR PLAN - WING A
1/4" = 1'-0"

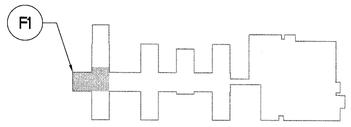

KEY PLAN - SECOND FLOOR
NTS

FULLY SPRINKLERED
BID DOCUMENTS - FOR CONSTRUCTION

Revisions	Date

CONSULTANTS:

STATE OF MICHIGAN — BLAINE CAMIEL VAN GANSBEKE — ENGINEER No. 6201056550 — LICENSED PROFESSIONAL ENGINEER

ARCHITECT/ENGINEERS:

PARADIGM ENGINEERS AND CONSTRUCTORS
200 Envoy Circle #201, Louisville KY 40299 – PH: 502.339.8511 – www.paradigmusa.com

Drawing Title	PLUMBING PLAN SECOND FLOOR WING A
Approved Project Director	
Project Title	RENOVATE 25 BED MEDICAL SURGICAL INPATIENT UNIT
Location	FAYETTEVILLE VAMC 2300 RAMSEY ST, FAYETTEVILLE, NC 28304
Date	09-10-2014
Checked	KLP
Drawn	JDM
Project Number	565-13-103
Building Number	1
Drawing Number	PP103

Office of Construction and Facilities Management
Department of Veterans Affairs

VA FORM 08-6231

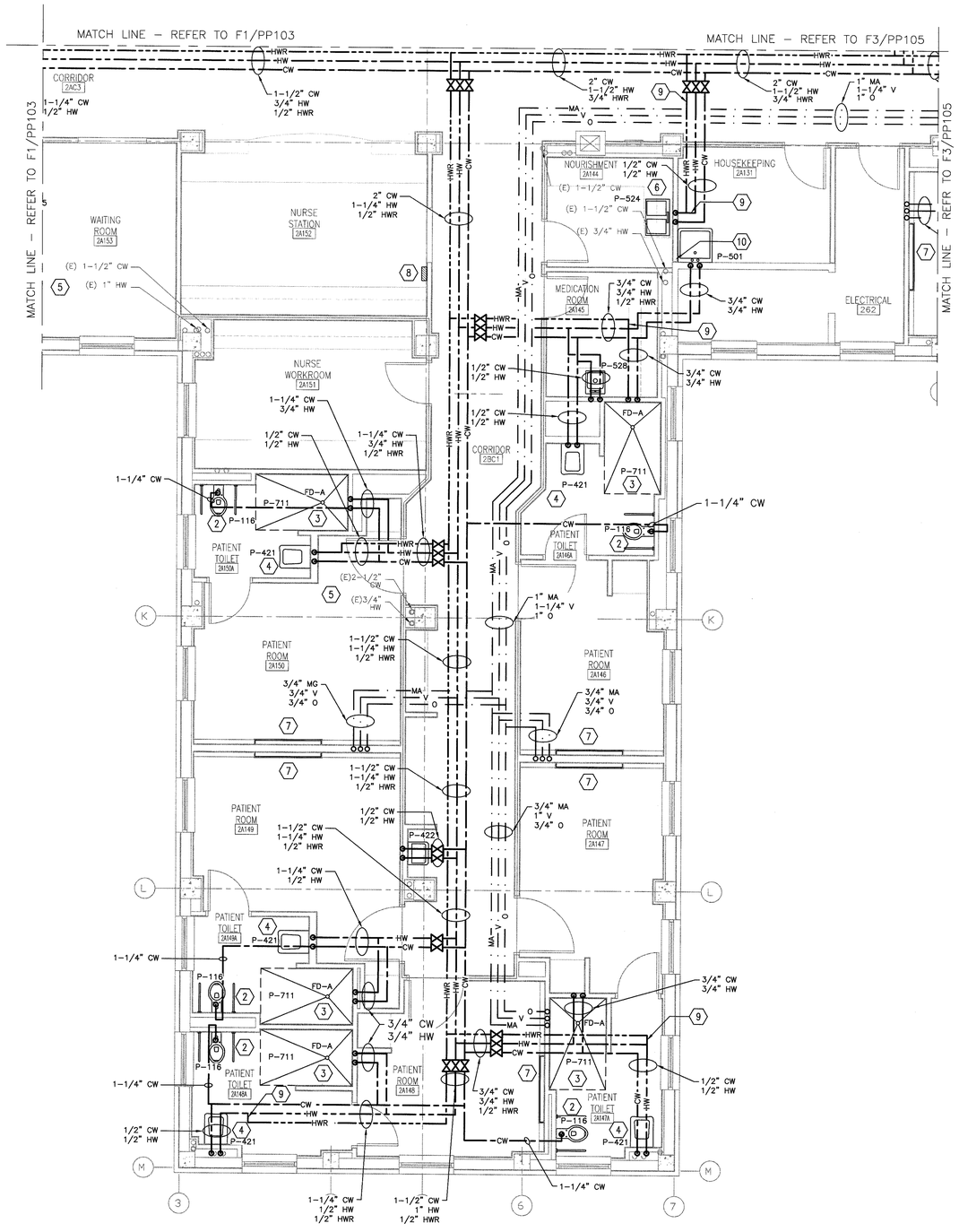

F3 SECOND FLOOR PLAN - WING A
1/4" = 1'-0"

NOTES

A. ALL EXISTING PIPING, DUCTWORK, SPRINKLERS, CONDUIT, LIGHTING OR OTHER CONSTRUCTION SHALL BE RELOCATED AS REQUIRED FOR ALL DEMOLITION AND INSTALLATION WORK.

B. REFER TO P-001 FOR PLUMBING SYMBOLS AND NOTES.

C. REFER TO PD104 FOR PLUMBING DEMOLITION.

D. PROVIDE A SHUTOFF VALVE ON CW, HW, AND HWR AT ALL BRANCHES FROM MAIN WATER LINES IN CORRIDOR.

E. THE CONTRACTOR SHALL LOCATE ALL NEW CONCRETE PENETRATIONS SUCH THAT THE PENETRATION DOES NOT OCCUR IN A CONCRETE BEAM OR PAN RIB.

F. THE PLUMBING CONTRACTOR SHALL REFERENCE DRAWINGS GI102 TO GI110 FOR PHASING REQUIREMENTS OF PROJECT. PHASING SHALL BE INCLUDED IN BASE BID.

KEY NOTES

1. NEW 3/4" HOT AND COLD WATER TO NEW LAV. PROVIDE NEW SINK WITH P-TRAP, HOT AND COLD WATER ANGLE STOP VALVES WITH ESCUTCHEON PLATES.
2. PROVIDE NEW WATER CLOSETS AND SERVICE SINKS WITH 1-1/4" COLD WATER DOWN TO FLUSH VALVE. 3" SANITARY DOWN AND 2" VENT UP.
3. NEW 3/4" HOT AND COLD WATER TO NEW SHOWER TEMPERING VALVE.
4. PROVIDE NEW PATIENT SINK WITH 3/4" COLD WATER AND 3/4" HOT WATER. PROVIDE NEW SANITARY 2" DOWN AND 1-1/2" VENT UP WITH NEW P-TRAP ANGLE STOP VALVES AND ESCUTCHEON PLATES.
5. EXISTING LINES TO REMAIN.
6. PROVIDE NEW SINK WITH 3/4" COLD WATER AND 3/4" HOT WATER. PROVIDE NEW SANITARY 2" DOWN AND 1-1/2" VENT UP WITH NEW P-TRAP ANGLE STOP VALVES AND ESCUTCHEON PLATES.
7. REFER TO F7/PP504 FOR HEADWALL ELEVATION AND LOCATION OF (2) MEDICAL AIR, (4) VACUUM, AND (2) OXYGEN PORTS. NEW MEDICAL GAS PIPING SHALL BE ROUTED TO THESE PORTS AS INDICATED.
8. NEW MEDICAL GAS ALARM PANEL; REFER TO PP108 FOR ALARM SENSOR LOCATIONS.
9. INSTALL 1/2" BALANCING VALVE AT THE LOCATION INDICATED FOR HWR CIRCULATION.
10. NEW 1/2" COLD WATER TO SERVICE A 3/8" SOFT COPPER WATER FEED TO ICE MACHINE/COFFEE MAKER IN THIS LOCATION. PROVIDE REQUIRED BACKFLOW PREVENTION. MOUNT AT 48" A.F.F.

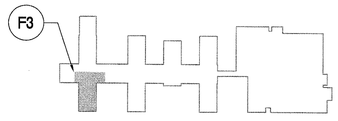

KEY PLAN - SECOND FLOOR
NTS

FULLY SPRINKLERED
BID DOCUMENTS - FOR CONSTRUCTION

Revisions	Date

CONSULTANTS:

STATE OF MICHIGAN
BLAINE CAMIEL VAN GANSBEKE
ENGINEER No. 6201056550
PROFESSIONAL ENGINEER

ARCHITECT/ENGINEERS:

PARADIGM
ENGINEERS AND CONSTRUCTORS
200 Envoy Circle #201, Louisville KY 40299 – PH: 502.339.8511 – www.paradigmusa.com

Drawing Title	PLUMBING PLAN SECOND FLOOR WING A
Approved Project Director	
Project Title	RENOVATE 25 BED MEDICAL SURGICAL INPATIENT UNIT
Location	FAYETTEVILLE VAMC 2300 RAMSEY ST, FAYETTEVILLE, NC 28304
Date	09-10-2014
Checked	KLP
Drawn	JDM
Project Number	565-13-103
Building Number	1
Drawing Number	PP104

Office of Construction and Facilities Management
Department of Veterans Affairs

VA FORM 08-6231

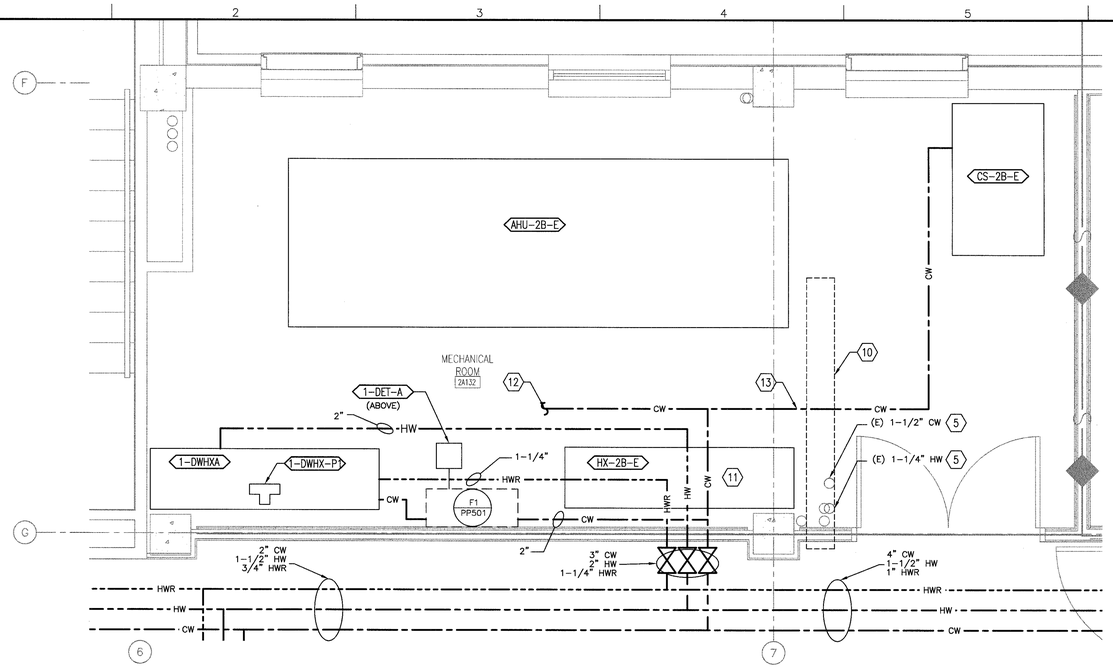

C1 ENLARGED MECHANICAL ROOM PLAN
1/2" = 1'-0"

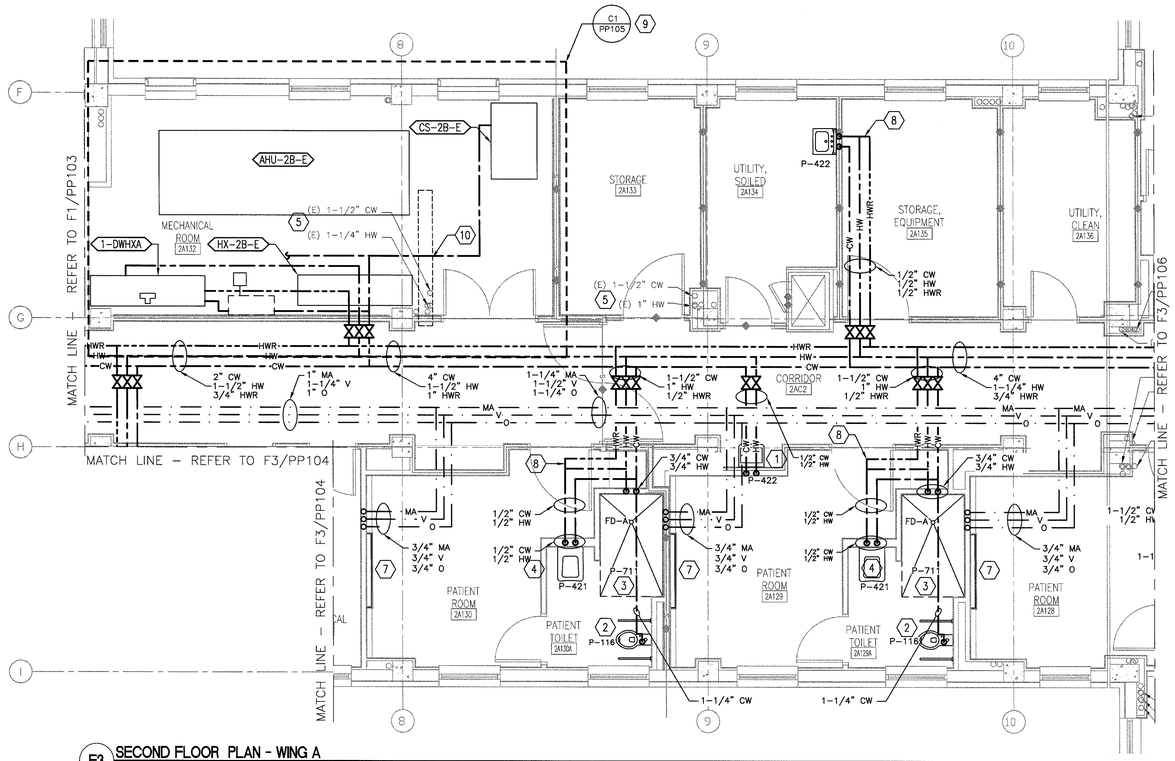

F3 SECOND FLOOR PLAN - WING A
1/4" = 1'-0"

NOTES

A. ALL EXISTING PIPING, DUCTWORK, SPRINKLERS, CONDUIT, LIGHTING OR OTHER CONSTRUCTION SHALL BE RELOCATED AS REQUIRED FOR ALL DEMOLITION AND INSTALLATION WORK.

B. REFER TO P-001 FOR PLUMBING SYMBOLS AND NOTES.

C. REFER TO PD105 FOR PLUMBING DEMOLITION.

D. PROVIDE A SHUTOFF VALVE ON CW, HW, AND HWR AT ALL BRANCHES FROM MAIN WATER LINES IN CORRIDOR.

E. THE CONTRACTOR SHALL LOCATE ALL NEW CONCRETE PENETRATIONS SUCH THAT THE PENETRATION DOES NOT OCCUR IN A CONCRETE BEAM OR PAN RIB.

F. THE PLUMBING CONTRACTOR SHALL REFERENCE DRAWINGS GI102 TO GI110 FOR PHASING REQUIREMENTS OF PROJECT. PHASING SHALL BE INCLUDED IN BASE BID.

KEY NOTES

1. NEW 3/4" HOT AND COLD WATER TO NEW LAV. PROVIDE NEW SINK WITH P-TRAP, HOT AND COLD WATER ANGLE STOP VALVES WITH ESCUTCHEON PLATES,
2. PROVIDE NEW WATER CLOSETS AND SERVICE SINKS WITH 1-1/4" COLD WATER DOWN TO FLUSH VALVE. 3" SANITARY DOWN AND 2" VENT UP.
3. NEW 3/4" HOT AND COLD WATER TO NEW SHOWER TEMPERING VALVE.
4. PROVIDE NEW PATIENT SINK WITH 3/4" COLD WATER AND 3/4" HOT WATER. PROVIDE NEW SANITARY 2" DOWN AND 1-1/2" VENT UP WITH NEW P-TRAP ANGLE STOP VALVES AND ESCUTCHEON PLATES.
5. EXISTING LINES TO REMAIN.
6. PROVIDE NEW SINK WITH 3/4" COLD WATER AND 3/4" HOT WATER. PROVIDE NEW SANITARY 2" DOWN AND 1-1/2" VENT UP WITH NEW P-TRAP ANGLE STOP VALVES AND ESCUTCHEON PLATES.
7. REFER TO F7/PP504 FOR HEADWALL ELEVATION AND LOCATION OF (2) MEDICAL AIR, (4) VACUUM, AND (2) OXYGEN PORTS. NEW MEDICAL GAS PIPING SHALL BE ROUTED TO THESE PORTS AS INDICATED.
8. INSTALL 1/2" BALANCING VALVE AT THE LOCATION INDICATED FOR HWR CIRCULATION.
9. REFER TO ENLARGED PLAN THIS SHEET FOR CONTINUATION.
10. EXISTING PLUMBING SHAFT TO REMAIN IN NEW MECHANICAL ROOM.
11. HEATING HOT WATER HEAT EXCHANGER; REFER TO MP105 FOR DETAILS.
12. 2" CW TO EXTEND TO HEATING HOT WATER HEAT EXCHANGER; REFER TO MP105 FOR DETAILS.
13. 2" CW TO EXTEND TO CLEAN STEAM GENERATOR; REFER TO MP105 FOR DETAILS.

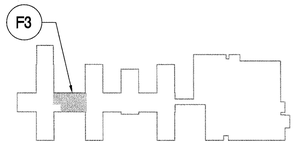

KEY PLAN - SECOND FLOOR
NTS

FULLY SPRINKLERED
BID DOCUMENTS - FOR CONSTRUCTION

Revisions	Date

CONSULTANTS:

9 Oct 2014
STATE OF MICHIGAN
BLAINE CAMIEL VAN GANSBEKE
ENGINEER
No. 6201056550
PROFESSIONAL ENGINEER

ARCHITECT/ENGINEERS:

PARADIGM
ENGINEERS AND CONSTRUCTORS
200 Envoy Circle #201, Louisville KY 40299 – PH: 502.339.8511 – www.paradigmusa.com

Drawing Title	PLUMBING PLAN SECOND FLOOR WING A
Approved Project Director	
Project Title	RENOVATE 25 BED MEDICAL SURGICAL INPATIENT UNIT
Location	FAYETTEVILLE VAMC 2300 RAMSEY ST, FAYETTEVILLE, NC 28304
Date	09-10-2014
Checked	KLP
Drawn	JDM
Project Number	565-13-103
Building Number	1
Drawing Number	PP105

Office of Construction and Facilities Management
Department of Veterans Affairs

VA FORM 08-6231

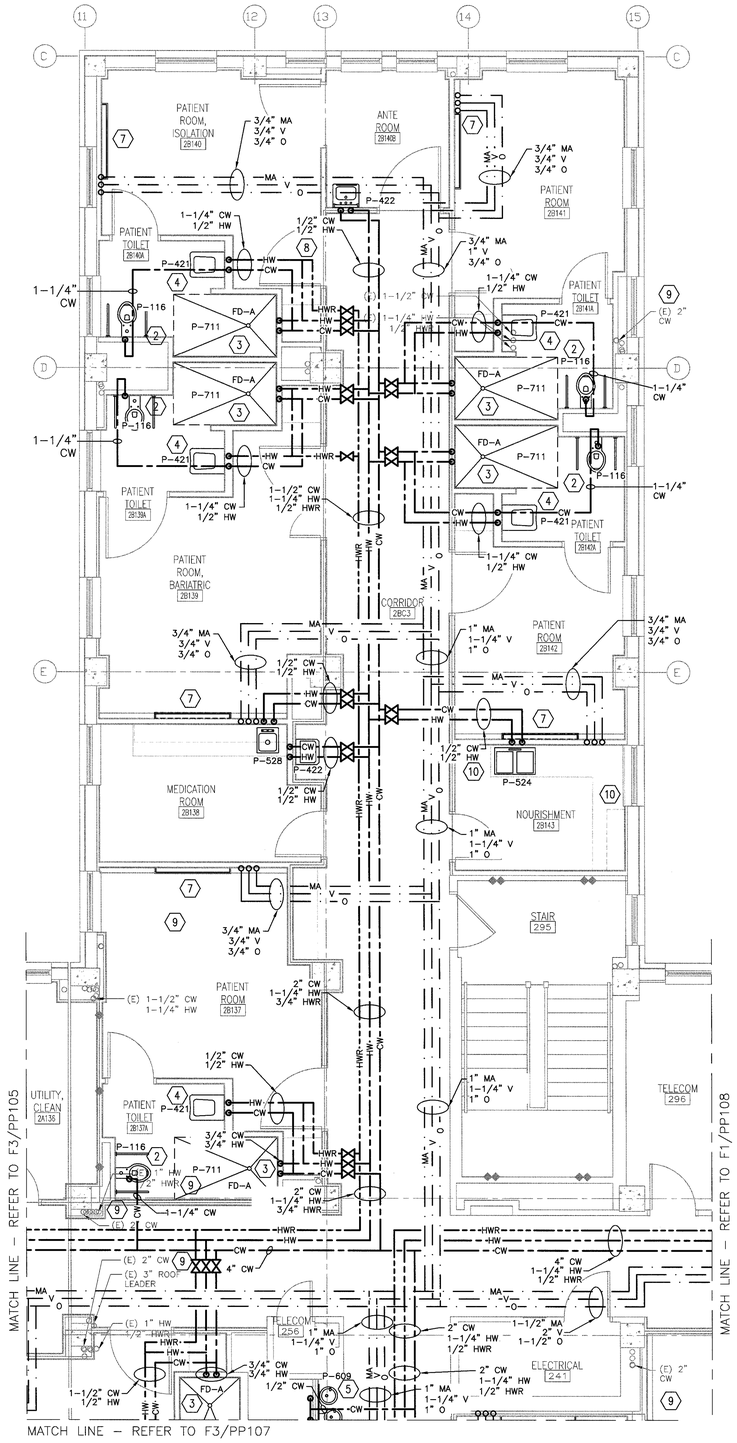

F3 SECOND FLOOR PLAN - WING B
1/4" = 1'-0"

NOTES

A. ALL EXISTING PIPING, DUCTWORK, SPRINKLERS, CONDUIT, LIGHTING OR OTHER CONSTRUCTION SHALL BE RELOCATED AS REQUIRED FOR ALL DEMOLITION AND INSTALLATION WORK.

B. REFER TO P-001 FOR PLUMBING SYMBOLS AND NOTES.

C. REFER TO PD106 FOR PLUMBING DEMOLITION.

D. PROVIDE A SHUTOFF VALVE ON CW, HW, AND HWR AT ALL BRANCHES FROM MAIN WATER LINES IN CORRIDOR.

E. THE CONTRACTOR SHALL LOCATE ALL NEW CONCRETE PENETRATIONS SUCH THAT THE PENETRATION DOES NOT OCCUR IN A CONCRETE BEAM OR PAN RIB.

F. THE PLUMBING CONTRACTOR SHALL REFERENCE DRAWINGS GI102 TO GI110 FOR PHASING REQUIREMENTS OF PROJECT. PHASING SHALL BE INCLUDED IN BASE BID.

KEY NOTES

1. NEW 3/4" HOT AND COLD WATER TO NEW LAV. PROVIDE NEW SINK WITH P-TRAP, HOT AND COLD WATER ANGLE STOP VALVES WITH ESCUTCHEON PLATES,
2. PROVIDE NEW WATER CLOSETS AND SERVICE SINKS WITH 1-1/4" COLD WATER DOWN TO FLUSH VALVE. 3" SANITARY DOWN AND 2" VENT UP.
3. NEW 3/4" HOT AND COLD WATER TO NEW SHOWER TEMPERING VALVE.
4. PROVIDE NEW PATIENT SINK WITH 3/4" COLD WATER AND 3/4" HOT WATER. PROVIDE NEW SANITARY 2" DOWN AND 1-1/2" VENT UP WITH NEW P-TRAP ANGLE STOP VALVES AND ESCUTCHEON PLATES.
5. PROVIDE 1/2" COLD WATER DOWN TO NEW WATER COOLER. PROVIDE SHUT OFF VALVE AT BRANCH CONNECTION.
6. PROVIDE NEW HAND SINK WITH 3/4" COLD WATER AND 3/4" HOT WATER. PROVIDE NEW SANITARY 2" DOWN AND 1-1/2" VENT UP WITH NEW P-TRAP ANGLE STOP VALVES AND ESCUTCHEON PLATES.
7. REFER TO F7/PP504 FOR HEADWALL ELEVATION AND LOCATION OF (2) MEDICAL AIR, (4) VACUUM, AND (2) OXYGEN PORTS. NEW MEDICAL GAS PIPING SHALL BE ROUTED TO THESE PORTS AS INDICATED.
8. INSTALL 1/2" BALANCING VALVE AT THE LOCATION INDICATED FOR HWR CIRCULATION.
9. EXISTING LINES TO REMAIN.
10. NEW 1/2" COLD WATER TO SERVICE A 3/8" SOFT COPPER WATER FEED TO ICE MACHINE/COFFEE MAKER IN THIS LOCATION. PROVIDE REQUIRED BACKFLOW PREVENTION. MOUNT AT 48" A.F.F.

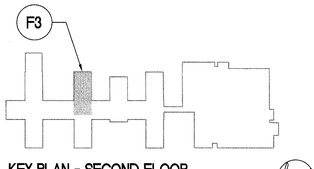

KEY PLAN - SECOND FLOOR
NTS

FULLY SPRINKLERED
BID DOCUMENTS - FOR CONSTRUCTION

Revisions:	Date

CONSULTANTS:

STATE OF MICHIGAN
BLAINE CAMIEL VAN GANSBEKE
ENGINEER No. 6201056550
LICENSED PROFESSIONAL ENGINEER
8-15-2014

ARCHITECT/ENGINEERS:

PARADIGM
ENGINEERS AND CONSTRUCTORS
200 Envoy Circle #201, Louisville KY 40299 – PH: 502.339.8511 – www.paradigmusa.com

Drawing Title	PLUMBING PLAN SECOND FLOOR WING B
Approved Project Director	
Project Title	RENOVATE 25 BED MEDICAL SURGICAL INPATIENT UNIT
Location	FAYETTEVILLE VAMC, 2300 RAMSEY ST, FAYETTEVILLE, NC 28304
Date	09-10-2014
Checked	KLP
Drawn	JDM
Project Number	565-13-103
Building Number	1
Drawing Number	PP106

Office of Construction and Facilities Management
Department of Veterans Affairs

VA FORM 08-6231

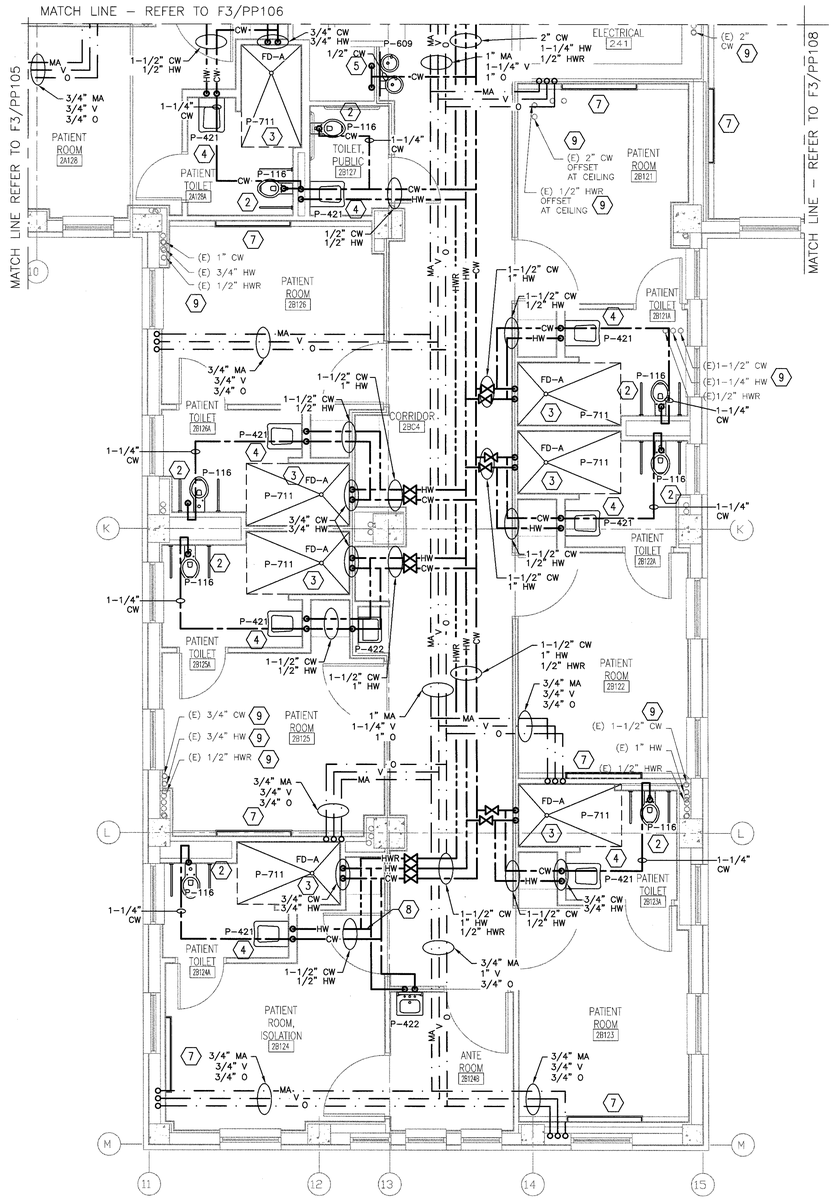

F3 SECOND FLOOR PLAN - WING B
1/4" = 1'-0"

NOTES

A. ALL EXISTING PIPING, DUCTWORK, SPRINKLERS, CONDUIT, LIGHTING OR OTHER CONSTRUCTION SHALL BE RELOCATED AS REQUIRED FOR ALL DEMOLITION AND INSTALLATION WORK.

B. REFER TO P-001 FOR PLUMBING SYMBOLS AND NOTES.

C. REFER TO PD107 FOR PLUMBING DEMOLITION.

D. PROVIDE A SHUTOFF VALVE ON CW, HW, AND HWR AT ALL BRANCHES FROM MAIN WATER LINES IN CORRIDOR.

E. THE CONTRACTOR SHALL LOCATE ALL NEW CONCRETE PENETRATIONS SUCH THAT THE PENETRATION DOES NOT OCCUR IN A CONCRETE BEAM OR PAN RIB.

F. THE PLUMBING CONTRACTOR SHALL REFERENCE DRAWINGS GI102 TO GI110 FOR PHASING REQUIREMENTS OF PROJECT. PHASING SHALL BE INCLUDED IN BASE BID.

KEY NOTES

1. NEW 3/4" HOT AND COLD WATER TO NEW LAV. PROVIDE NEW SINK WITH P-TRAP, HOT AND COLD WATER ANGLE STOP VALVES WITH ESCUTCHEON PLATES,
2. PROVIDE NEW WATER CLOSETS AND SERVICE SINKS WITH 1-1/4" COLD WATER DOWN TO FLUSH VALVE. 3" SANITARY DOWN AND 2" VENT UP.
3. NEW 3/4" HOT AND COLD WATER TO NEW SHOWER TEMPERING VALVE.
4. PROVIDE NEW PATIENT SINK WITH 3/4" COLD WATER AND 3/4" HOT WATER. PROVIDE NEW SANITARY 2" DOWN AND 1-1/2" VENT UP WITH NEW P-TRAP ANGLE STOP VALVES AND ESCUTCHEON PLATES.
5. PROVIDE 1/2" COLD WATER DOWN TO NEW WATER COOLER. PROVIDE SHUT OFF VALVE AT BRANCH CONNECTION.
6. PROVIDE NEW SINK WITH 3/4" COLD WATER AND 3/4" HOT WATER. PROVIDE NEW SANITARY 2" DOWN AND 1-1/2" VENT UP WITH NEW P-TRAP ANGLE STOP VALVES AND ESCUTCHEON PLATES.
7. REFER TO F7/PP504 FOR HEADWALL ELEVATION AND LOCATION OF (2) MEDICAL AIR, (4) VACUUM, AND (2) OXYGEN PORTS. NEW MEDICAL GAS PIPING SHALL BE ROUTED TO THESE PORTS AS INDICATED.
8. INSTALL 1/2" BALANCING VALVE AT THE LOCATION INDICATED FOR HWR CIRCULATION.
9. EXISTING LINES TO REMAIN.

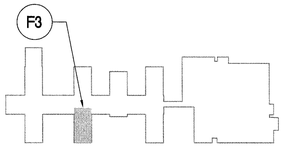

KEY PLAN - SECOND FLOOR
NTS

FULLY SPRINKLERED
BID DOCUMENTS - FOR CONSTRUCTION

Revisions	Date

CONSULTANTS:

10 SEP 2014
STATE OF MICHIGAN
BLAINE DANIEL VAN GANSBEKE
ENGINEER
No. 4201056680
LICENSED PROFESSIONAL ENGINEER

ARCHITECT/ENGINEERS:
PARADIGM
ENGINEERS AND CONSTRUCTORS
200 Envoy Circle #201, Louisville KY 40299 – PH: 502.339.8511 – www.paradigmusa.com

Drawing Title: PLUMBING PLAN SECOND FLOOR WING B	Project Title: RENOVATE 25 BED MEDICAL SURGICAL INPATIENT UNIT		Project Number: 565-13-103
Approved Project Director	Location: FAYETTEVILLE VAMC, 2300 RAMSEY ST, FAYETTEVILLE, NC 28304		Building Number: 1
	Date: 09-10-2014	Checked: KLP / Drawn: JDM	Drawing Number: PP107

Office of Construction and Facilities Management
Department of Veterans Affairs

VA FORM 08-6231

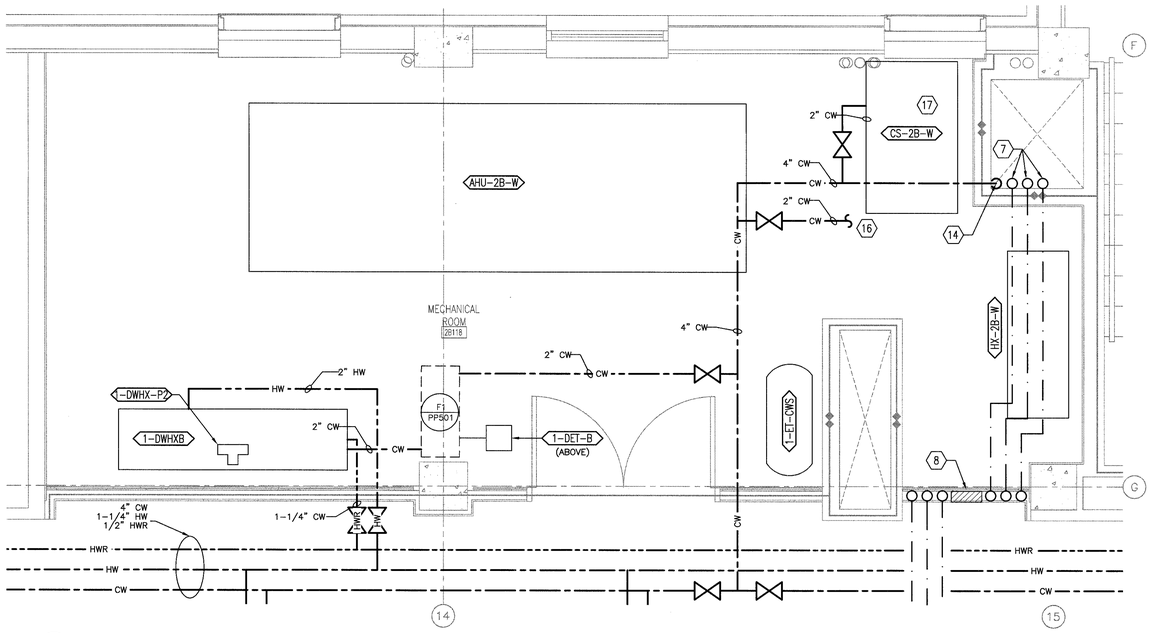

C1 ENLARGED MECHANICAL ROOM PLAN
1/2" = 1'-0"

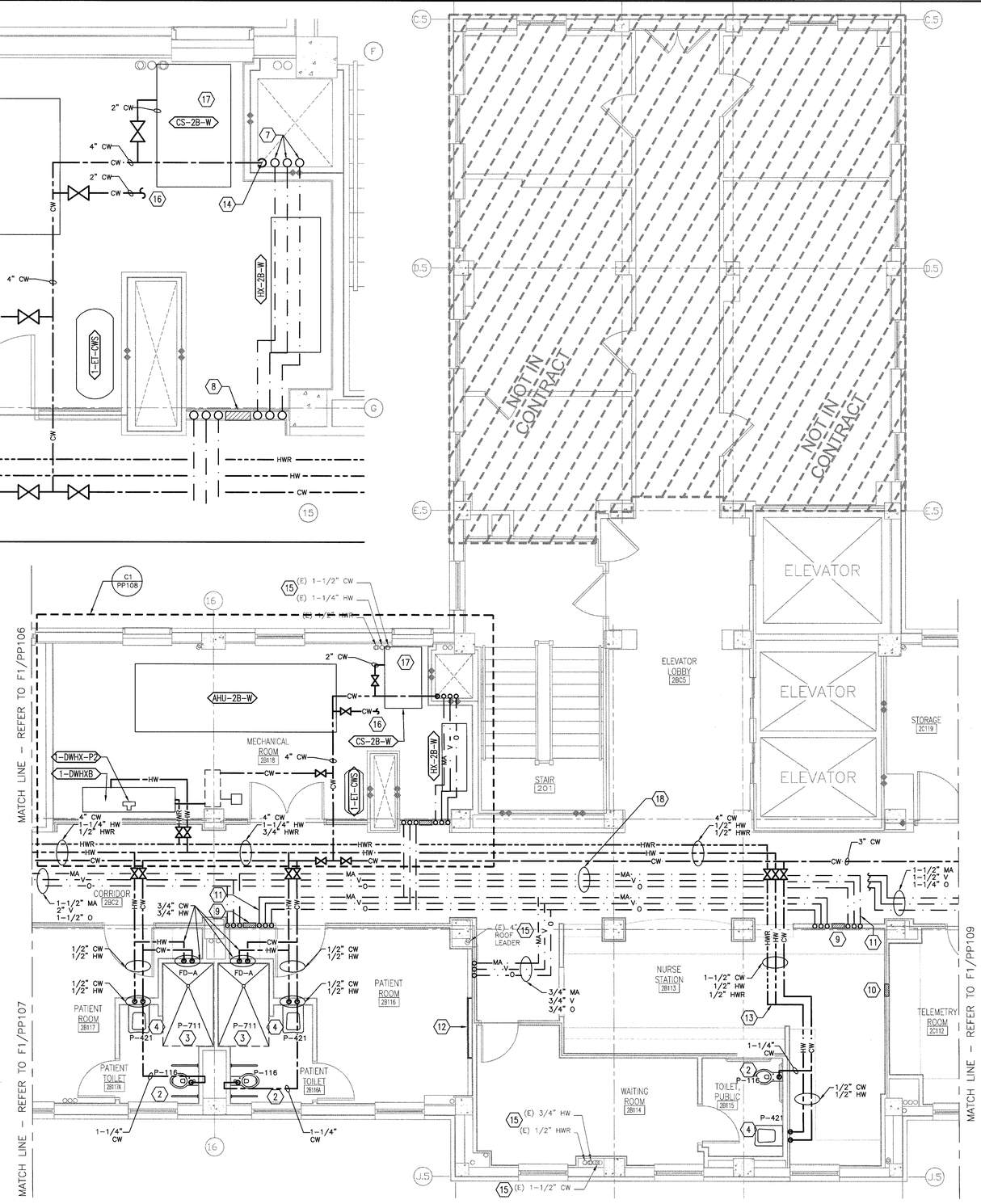

F1 SECOND FLOOR PLAN - WING B
1/4" = 1'-0"

NOTES

A. ALL EXISTING PIPING, DUCTWORK, SPRINKLERS, CONDUIT, LIGHTING OR OTHER CONSTRUCTION SHALL BE RELOCATED AS REQUIRED FOR ALL DEMOLITION AND INSTALLATION WORK.

B. REFER TO P-001 FOR PLUMBING SYMBOLS AND NOTES.

C. REFER TO PD108 FOR PLUMBING DEMOLITION.

D. PROVIDE A SHUTOFF VALVE ON CW, HW, AND HWR AT ALL BRANCHES FROM MAIN WATER LINES IN CORRIDOR.

E. THE CONTRACTOR SHALL LOCATE ALL NEW CONCRETE PENETRATIONS SUCH THAT THE PENETRATION DOES NOT OCCUR IN A CONCRETE BEAM OR PAN RIB.

F. THE PLUMBING CONTRACTOR SHALL REFERENCE DRAWINGS GI102 TO GI110 FOR PHASING REQUIREMENTS OF PROJECT. PHASING SHALL BE INCLUDED IN BASE BID.

KEY NOTES

1. NEW 3/4" HOT AND COLD WATER TO NEW LAV. PROVIDE NEW SINK WITH P-TRAP, HOT AND COLD WATER ANGLE STOP VALVES WITH ESCUTCHEON PLATES,
2. PROVIDE NEW WATER CLOSETS AND SERVICE SINKS WITH 1-1/4" COLD WATER DOWN TO FLUSH VALVE. 3" SANITARY DOWN AND 2" VENT UP.
3. NEW 3/4" HOT AND COLD WATER TO NEW SHOWER TEMPERING VALVE.
4. PROVIDE NEW PATIENT SINK WITH 3/4" COLD WATER AND 3/4" HOT WATER. PROVIDE NEW SANITARY 2" DOWN AND 1-1/2" VENT UP WITH NEW P-TRAP ANGLE STOP VALVES AND ESCUTCHEON PLATES.
5. PROVIDE 1/2" COLD WATER DOWN TO NEW WATER COOLER. PROVIDE SHUT OFF VALVE AT BRANCH CONNECTION.
6. PROVIDE NEW SINK WITH 3/4" COLD WATER AND 3/4" HOT WATER. PROVIDE NEW SANITARY 2" DOWN AND 1-1/2" VENT UP WITH NEW P-TRAP ANGLE STOP VALVES AND ESCUTCHEON PLATES.
7. NEW MEDICAL GAS PIPING UP FROM BELOW IN SHAFT.
8. NEW MAIN MEDICAL GAS SHUT OFF VALVES.
9. NEW MEDICAL AIR ZONE VALVE SHUT OFF BOXES LOCATED WITHIN NEW WALL PER NFPA 99. ZONE VALVES SERVICE OPPOSITE SMOKE CONTROL ZONE PIPING.
10. NEW MEDICAL GAS ALARM PANEL.
11. NEW MEDICAL GAS ALARM SENSOR LOCATION.
12. REFER TO F7/PP504 FOR HEADWALL ELEVATION AND LOCATION OF (2) MEDICAL AIR, (4) VACUUM, AND (2) OXYGEN PORTS. NEW MEDICAL GAS PIPING SHALL BE ROUTED TO THESE PORTS AS INDICATED.
13. INSTALL 1/2" BALANCING VALVE AT THE LOCATION INDICATED FOR HWR CIRCULATION.
14. NEW 4" CW RISER DOWN TO BASEMENT.
15. EXISTING LINES TO REMAIN.
16. 2" CW TO EXTEND TO HEATING HOT WATER HEAT EXCHANGER; REFER TO MP105 FOR DETAILS.
17. 2" CW TO EXTEND TO CLEAN STEAM GENERATOR; REFER TO MP105 FOR DETAILS.
18. MEDICAL GASES CROSS (2 SETS), ONE ABOVE AND ONE BELOW, IN THIS LOCATION. THE EAST ZONE SHUT OFF VALVE LOCATION SERVICES THE WEST PORTION OF THE SECOND FLOOR, AND THE WEST ZONE SHUT OFF VALVE SERVICES THE EAST PORTION OF THE SECOND FLOOR.

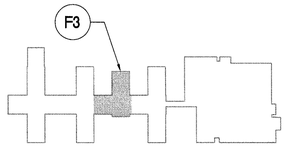

KEY PLAN - SECOND FLOOR
NTS

FULLY SPRINKLERED
BID DOCUMENTS - FOR CONSTRUCTION

Revisions:	Date

CONSULTANTS:

STATE OF MICHIGAN — BLAINE CAMIEL VAN GANSBEKE — ENGINEER No. 6201055550 — PROFESSIONAL ENGINEER — Sept 2014

ARCHITECT/ENGINEERS:

PARADIGM ENGINEERS AND CONSTRUCTORS
200 Envoy Circle #201, Louisville KY 40299 – PH: 502.339.8511 – www.paradigmusa.com

Drawing Title	PLUMBING PLAN SECOND FLOOR WING B
Approved Project Director	
Project Title	RENOVATE 25 BED MEDICAL SURGICAL INPATIENT UNIT
Location	FAYETTEVILLE VAMC, 2300 RAMSEY ST, FAYETTEVILLE, NC 28304
Date	09-10-2014
Checked	KLP
Drawn	JDM
Project Number	565-13-103
Building Number	1
Drawing Number	PP108

Office of Construction and Facilities Management
Department of Veterans Affairs

VA FORM 08-6231

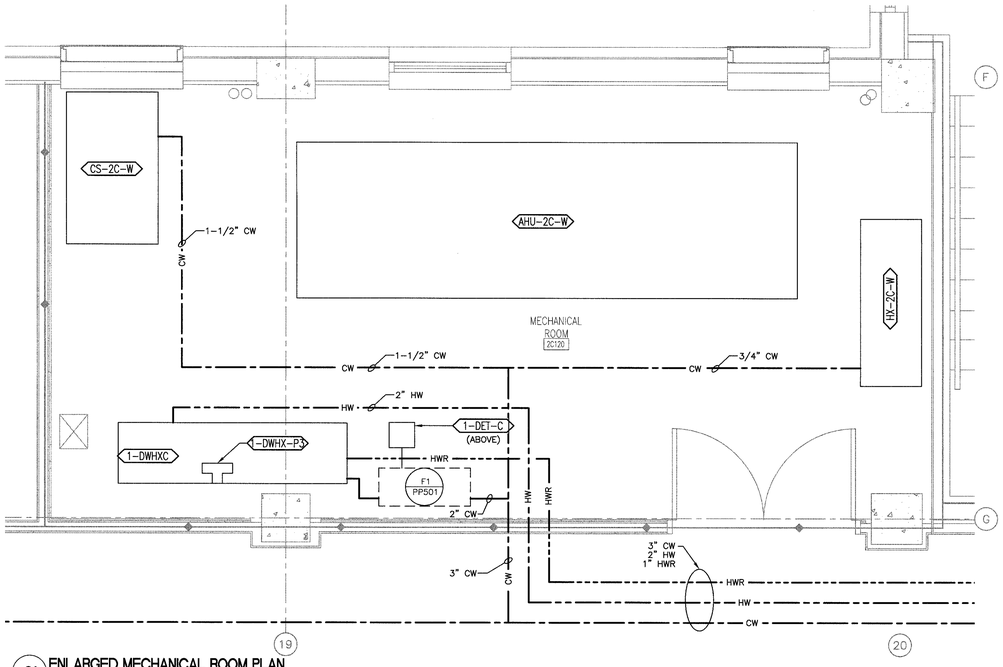

C1 ENLARGED MECHANICAL ROOM PLAN
1/2" = 1'-0"

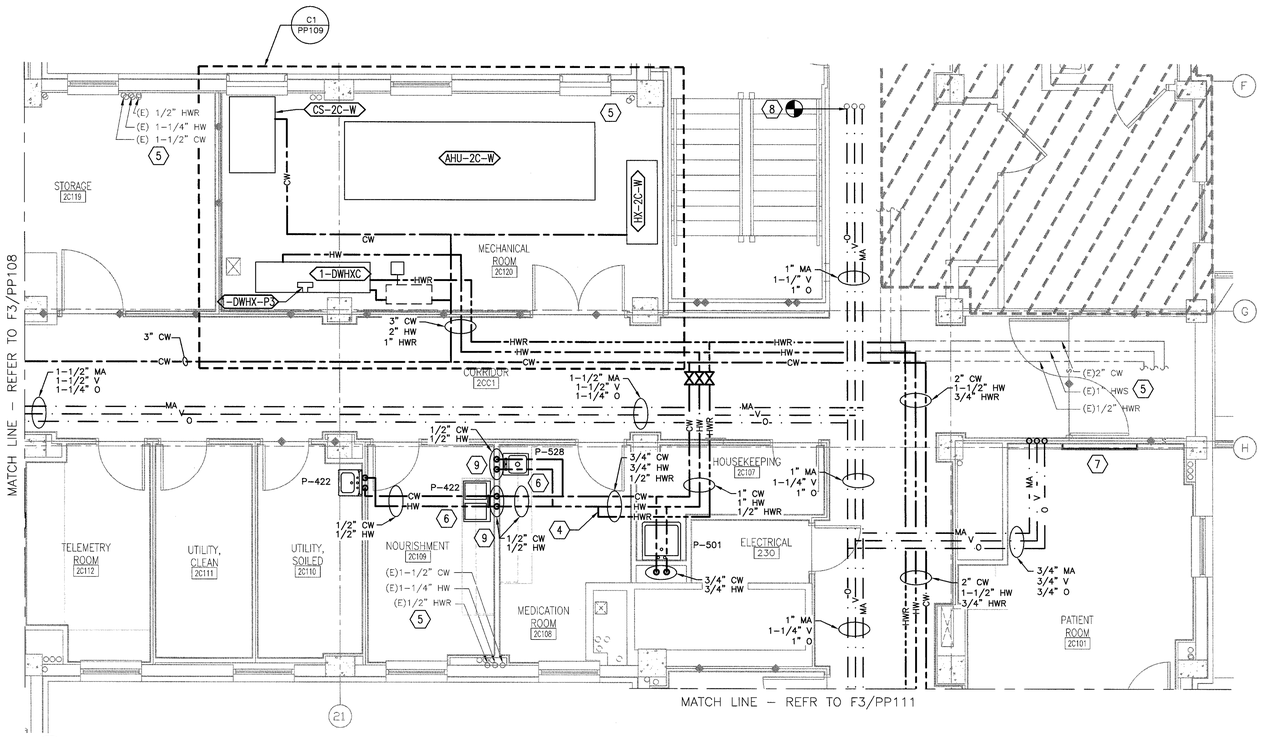

F1 SECOND FLOOR PLAN - WING C
1/4" = 1'-0"

NOTES

A. ALL EXISTING PIPING, DUCTWORK, SPRINKLERS, CONDUIT, LIGHTING OR OTHER CONSTRUCTION SHALL BE RELOCATED AS REQUIRED FOR ALL DEMOLITION AND INSTALLATION WORK.

B. REFER TO P-001 FOR PLUMBING SYMBOLS AND NOTES.

C. REFER TO PD109 FOR PLUMBING DEMOLITION.

D. PROVIDE A SHUTOFF VALVE ON CW, HW, AND HWR AT ALL BRANCHES FROM MAIN WATER LINES IN CORRIDOR.

E. THE CONTRACTOR SHALL LOCATE ALL NEW CONCRETE PENETRATIONS SUCH THAT THE PENETRATION DOES NOT OCCUR IN A CONCRETE BEAM OR PAN RIB.

F. THE PLUMBING CONTRACTOR SHALL REFERENCE DRAWINGS GI102 TO GI110 FOR PHASING REQUIREMENTS OF PROJECT. PHASING SHALL BE INCLUDED IN BASE BID.

KEY NOTES

1. NEW 3/4" HOT AND COLD WATER TO NEW UTILITY SINK. PROVIDE NEW SINK WITH P-TRAP, HOT AND COLD WATER ANGLE STOP VALVES WITH ESCUTCHEON PLATES,
2. PROVIDE NEW WATER CLOSETS AND SERVICE SINKS WITH 1-1/4" COLD WATER DOWN TO FLUSH VALVE. 3" SANITARY DOWN AND 2" VENT UP.
3. REFER TO ENLARGED PLAN THIS SHEET FOR CONTINUATION.
4. INSTALL 1/2" BALANCING VALVE AT THE LOCATION INDICATED FOR HWR CIRCULATION.
5. EXISTING LINES TO REMAIN.
6. PROVIDE NEW HAND SINK WITH 3/4" COLD WATER AND 3/4" HOT WATER. PROVIDE NEW SANITARY 2" DOWN AND 1-1/2" VENT UP WITH NEW P-TRAP ANGLE STOP VALVES AND ESCUTCHEON PLATES.
7. REFER TO F7/PP504 FOR HEADWALL ELEVATION AND LOCATION OF (2) MEDICAL AIR, (4) VACUUM, AND (2) OXYGEN PORTS. NEW MEDICAL GAS PIPING SHALL BE ROUTED TO THESE PORTS AS INDICATED.
8. TIE INTO EXISTING MED GASES AT THIS LOCATION AN REMOVE EXISTING PANEL; REFER TO PD109.
9. NEW 1/2" COLD WATER TO SERVICE A 3/8" SOFT COPPER WATER FEED TO ICE MACHINE/COFFEE MAKER IN THIS LOCATION. PROVIDE REQUIRED BACKFLOW PREVENTION. MOUNT AT 48" A.F.F.

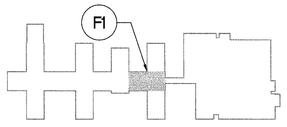

KEY PLAN - SECOND FLOOR
NTS

FULLY SPRINKLERED
BID DOCUMENTS - FOR CONSTRUCTION

Revisions	Date

CONSULTANTS:

STATE OF MICHIGAN
BLAINE CAMIEL VAN GANSBEKE
ENGINEER
No. 6201058950
LICENSED PROFESSIONAL ENGINEER
10 Oct 2014

ARCHITECT/ENGINEERS:
PARADIGM
ENGINEERS AND CONSTRUCTORS
200 Envoy Circle #201, Louisville KY 40299 - PH: 502.339.8511 - www.paradigmusa.com

Drawing Title	PLUMBING PLAN SECOND FLOOR WING C
Approved Project Director	
Project Title	RENOVATE 25 BED MEDICAL SURGICAL INPATIENT UNIT
Location	FAYETTEVILLE VAMC, 2300 RAMSEY ST., FAYETTEVILLE, NC 28304
Date	09-10-2014
Checked	KLP
Drawn	JDM
Project Number	565-13-103
Building Number	1
Drawing Number	PP109

Office of Construction and Facilities Management
Department of Veterans Affairs

VA FORM 08-6231

NOTES

A. ALL EXISTING PIPING, DUCTWORK, SPRINKLERS, CONDUIT, LIGHTING OR OTHER CONSTRUCTION SHALL BE RELOCATED AS REQUIRED FOR ALL DEMOLITION AND INSTALLATION WORK.

B. REFER TO P-001 FOR PLUMBING SYMBOLS AND NOTES.

C. REFER TO PD111 FOR PLUMBING DEMOLITION.

D. PROVIDE A SHUTOFF VALVE ON CW, HW, AND HWR AT ALL BRANCHES FROM MAIN WATER LINES IN CORRIDOR.

E. THE CONTRACTOR SHALL LOCATE ALL NEW CONCRETE PENETRATIONS SUCH THAT THE PENETRATION DOES NOT OCCUR IN A CONCRETE BEAM OR PAN RIB.

F. THE PLUMBING CONTRACTOR SHALL REFERENCE DRAWINGS GI102 TO GI110 FOR PHASING REQUIREMENTS OF PROJECT. PHASING SHALL BE INCLUDED IN BASE BID.

KEY NOTES

1. NEW 3/4" HOT AND COLD WATER TO NEW LAV. PROVIDE NEW SINK WITH P-TRAP, HOT AND COLD WATER ANGLE STOP VALVES WITH ESCUTCHEON PLATES,
2. PROVIDE NEW WATER CLOSETS AND SERVICE SINKS WITH 1-1/4" COLD WATER DOWN TO FLUSH VALVE. 3" SANITARY DOWN AND 2" VENT UP.
3. NEW 3/4" HOT AND COLD WATER TO NEW SHOWER TEMPERING VALVE.
4. PROVIDE NEW PATIENT SINK WITH 3/4" COLD WATER AND 3/4" HOT WATER. PROVIDE NEW SANITARY 2" DOWN AND 1-1/2" VENT UP WITH NEW P-TRAP ANGLE STOP VALVES AND ESCUTCHEON PLATES.
5. PROVIDE 1/2" COLD WATER DOWN TO NEW WATER COOLER. PROVIDE SHUT OFF VALVE AT BRANCH CONNECTION.
6. PROVIDE NEW HAND SINK WITH 3/4" COLD WATER AND 3/4" HOT WATER. PROVIDE NEW SANITARY 2" DOWN AND 1-1/2" VENT UP WITH NEW P-TRAP ANGLE STOP VALVES AND ESCUTCHEON PLATES.
7. REFER TO F7/PP504 FOR HEADWALL ELEVATION AND LOCATION OF (2) MEDICAL AIR, (4) VACUUM, AND (2) OXYGEN PORTS. NEW MEDICAL GAS PIPING SHALL BE ROUTED TO THESE PORTS AS INDICATED.
8. INSTALL 1/2" BALANCING VALVE AT THE LOCATION INDICATED FOR HWR CIRCULATION.
9. EXISTING LINES TO REMAIN.

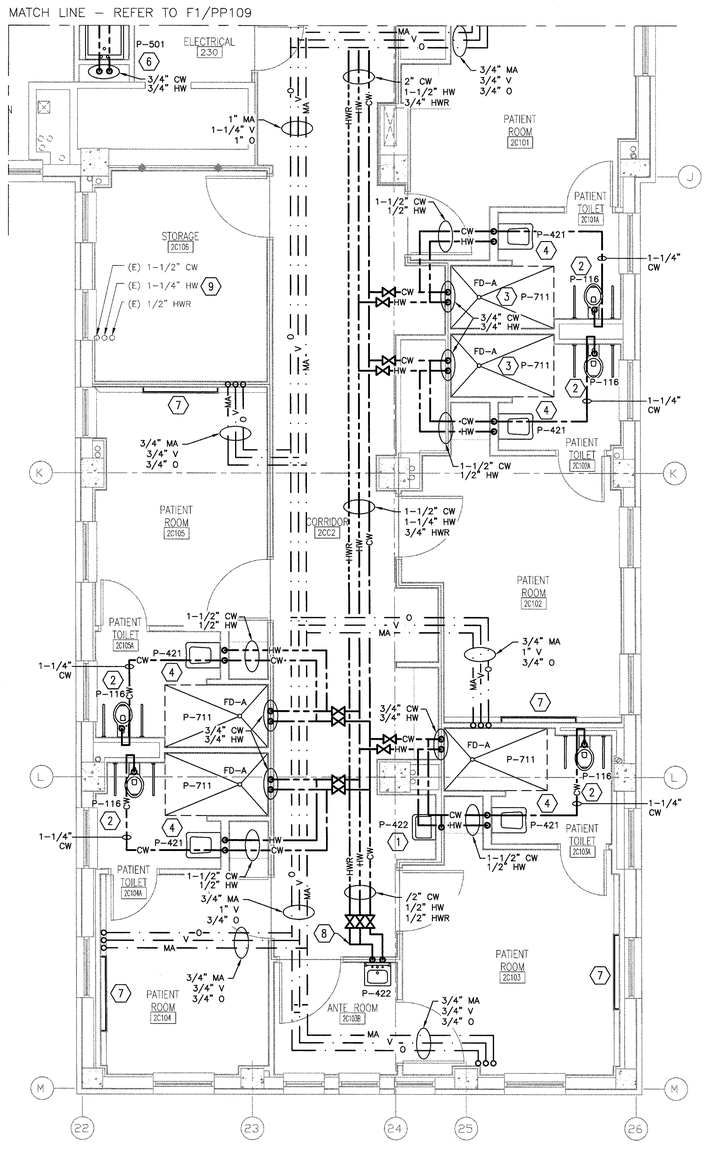

F3 SECOND FLOOR PLAN - WING C
1/4" = 1'-0"

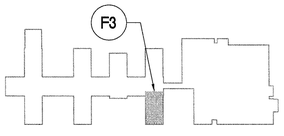

KEY PLAN - SECOND FLOOR
NTS

FULLY SPRINKLERED
BID DOCUMENTS - FOR CONSTRUCTION

Revisions:	Date

CONSULTANTS:

STATE OF MICHIGAN BLAINE CAMIEL VAN GANSREKE ENGINEER No. 6201056540 LICENSED PROFESSIONAL ENGINEER

ARCHITECT/ENGINEERS:

PARADIGM ENGINEERS AND CONSTRUCTORS
200 Envoy Circle #201, Louisville KY 40299 – PH: 502.339.8511 – www.paradigmusa.com

Drawing Title: PLUMBING PLAN SECOND FLOOR WING C	Project Title: RENOVATE 25 BED MEDICAL SURGICAL INPATIENT UNIT	Project Number: 565-13-103	Office of Construction and Facilities Management
Approved Project Director	Location: FAYETTEVILLE VAMC, 2300 RAMSEY ST, FAYETTEVILLE, NC 28304	Building Number: 1	
	Date: 09-10-2014 / Checked: KLP / Drawn: JDM	Drawing Number: PP111	Department of Veterans Affairs

VA FORM 08-6231

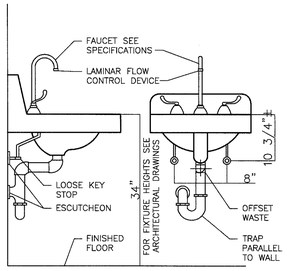

B1 TYPICAL WHEELCHAIR LAVATORY DETAIL
NOT TO SCALE

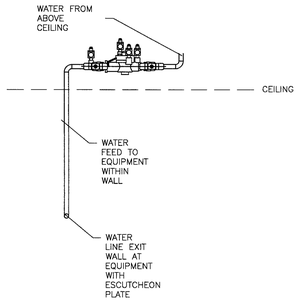

B2 TYPICAL POINT-OF-USE EQUIPMENT BACKFLOW
NOT TO SCALE

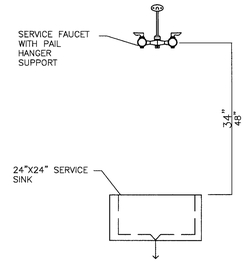

B4 TYPICAL UTILITY SINK ELEVATION
NOT TO SCALE

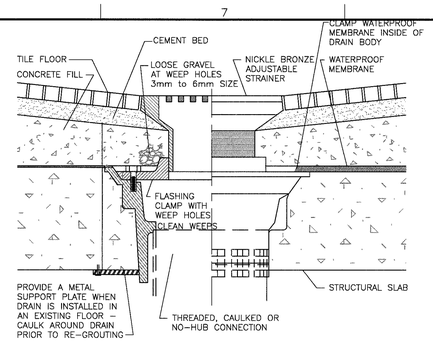

B6 TYPE 'A' FLOOR DRAIN DETAIL
NOT TO SCALE

NOTES

A. REFER TO PP SERIES SHEETS FOR NEW PLUMBING WORK.

B. ALL EXISTING PIPING, DUCTWORK, SPRINKLERS, CONDUIT, LIGHTING OR OTHER CONSTRUCTION SHALL BE RELOCATED AS REQUIRED FOR ALL DEMOLITION AND INSTALLATION WORK.

C. THE CONTRACTOR SHALL LOCATE ALL NEW CONCRETE PENETRATIONS SUCH THAT THE PENETRATION DOES NOT OCCUR IN A CONCRETE BEAM OR PAN RIB.

D. THE PLUMBING CONTRACTOR SHALL REFERENCE DRAWINGS GI102 TO GI110 FOR PHASING REQUIREMENTS OF PROJECT. PHASING SHALL BE INCLUDED IN BASE BID.

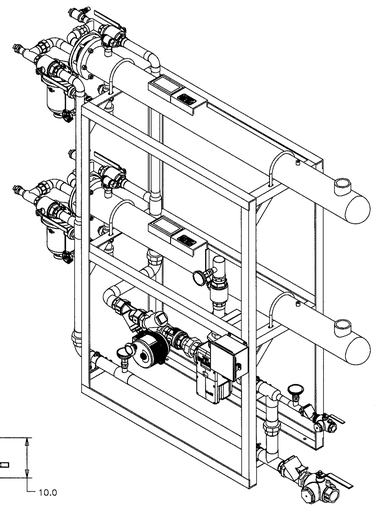

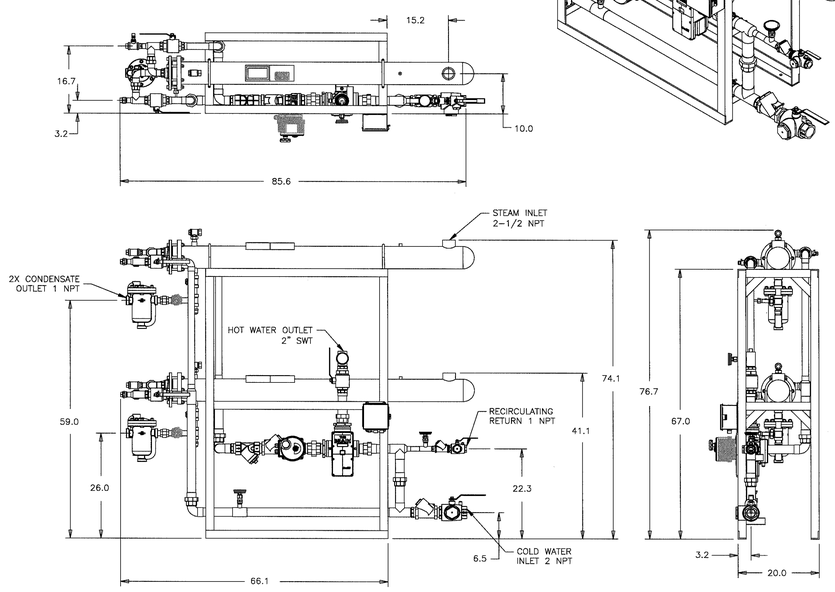

F1 HEAT EXCHANGER
NOT TO SCALE

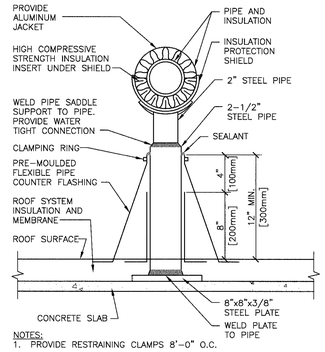

NOTES:
1. PROVIDE RESTRAINING CLAMPS 8'-0" O.C.

C4 DETAIL FOR SUPPORTING PIPE ON GROUND
NOT TO SCALE

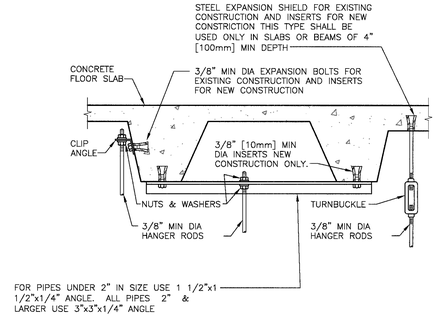

C6 SECURING HANGER RODS IN CONCRETE
NOT TO SCALE

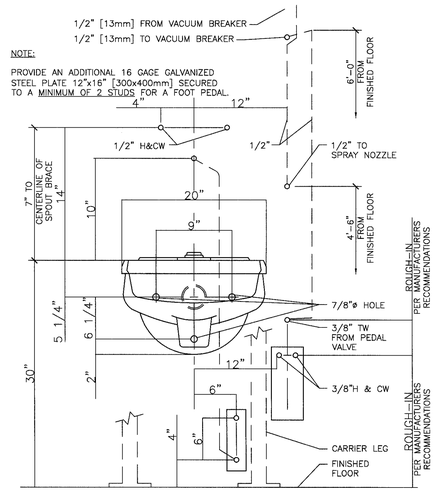

D8 CLINIC SERVICE SINK ROUGH-IN DETAIL P-505
NOT TO SCALE

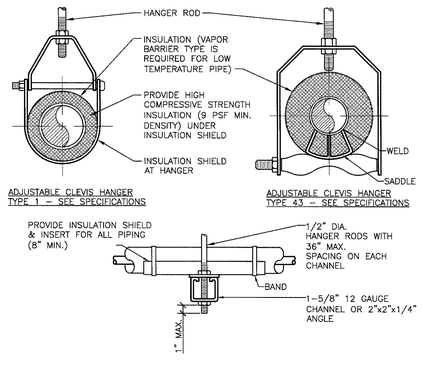

SIDE VIEW TRAPEZE HANGER FOR UP TO 1000 LB. UNIFORM LOAD

MAXIMUM PIPE/TUBING SUPPORT SPACING																		
NOM. SIZE (IN.)	THRU 3/4	1	1 1/4	1 1/2	2	2 1/2	3	4	5	6	8	10	12	14	16	18	20	24
PIPE (FT.)	7	7	7	9	10	11	12	14	16	17	19	22	23	25	27	28	30	32
TUBING (FT.)	5 FT.	6	7	8	8	9	10	12	13	14	16	–	–	–	–	–	–	–

NOTES:
1. FOR TRAPEZE HANGER TAKE SPACING OF SMALLEST SIZE ON TRAPEZE.

NOTES:
1. SEE SPECIFER FOR DETAILED HANGER REQUIREMENTS.

F4 PIPE HANGERS
NOT TO SCALE

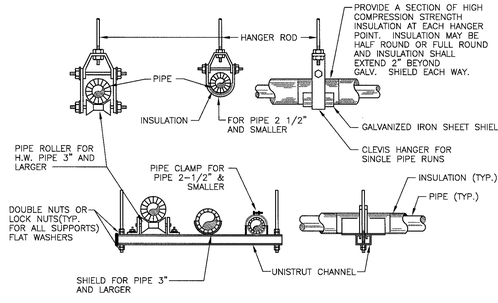

E6 PIPE HANGERS AND SUPPORTS DETAIL
NOT TO SCALE

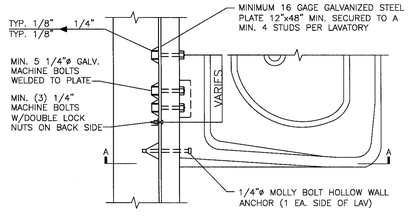

PLAN

NOTE:

1. AT LAVS WITH FOOT PEDAL CONTROLS PROVIDE AN ADDITIONAL 16 GAGE GALVANIZED STEEL PLATE 12"x16" SECURED TO A MINIMUM OF 2 STUDS PER FOOT PEDAL.
2. PROVIDE 20 GAGE STUDS WHEN HEIGHT EXCEEDS 12'-0".

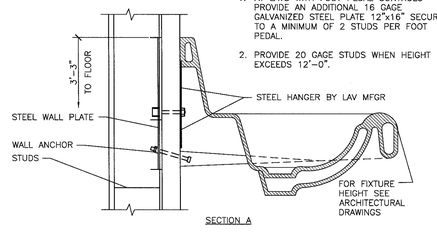

SECTION A

E8 LAVATORY MOUNTING DETAIL
NOT TO SCALE

FULLY SPRINKLERED
BID DOCUMENTS - FOR CONSTRUCTION

Revisions	Date

CONSULTANTS:

Sept 2014
STATE OF MICHIGAN
BLAINE CAMIEL VAN GANSBEKE
ENGINEER No. 6201056550
LICENSED PROFESSIONAL ENGINEER

ARCHITECT/ENGINEERS:
PARADIGM
ENGINEERS AND CONSTRUCTORS
200 Envoy Circle #201, Louisville KY 40299 – PH: 502.339.8511 – www.paradigmusa.com

Drawing Title: PLUMBING DETAILS
Approved Project Director:
Project Title: RENOVATE 25 BED MEDICAL SURGICAL INPATIENT UNIT
Location: FAYETTEVILLE VAMC, 2300 RAMSEY ST., FAYETTEVILLE, NC 28304
Date: 09-10-2014
Checked: KLP
Drawn: JDM
Project Number: 565-13-103
Building Number: 1
Drawing Number: PP501

Office of Construction and Facilities Management
Department of Veterans Affairs

VA FORM 08-6231

NOTES

A. REFER TO PP SERIES SHEETS FOR NEW PLUMBING WORK.

B. ALL EXISTING PIPING, DUCTWORK, SPRINKLERS, CONDUIT, LIGHTING OR OTHER CONSTRUCTION SHALL BE RELOCATED AS REQUIRED FOR ALL DEMOLITION AND INSTALLATION WORK.

C. THE CONTRACTOR SHALL LOCATE ALL NEW CONCRETE PENETRATIONS SUCH THAT THE PENETRATION DOES NOT OCCUR IN A CONCRETE BEAM OR PAN RIB.

D. THE PLUMBING CONTRACTOR SHALL REFERENCE DRAWINGS GI102 TO GI110 FOR PHASING REQUIREMENTS OF PROJECT. PHASING SHALL BE INCLUDED IN BASE BID.

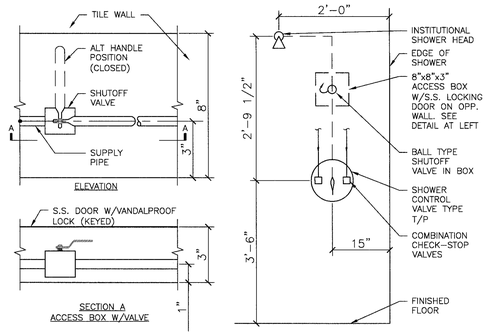

B4 P-711 PATIENT SHOWER
NOT TO SCALE

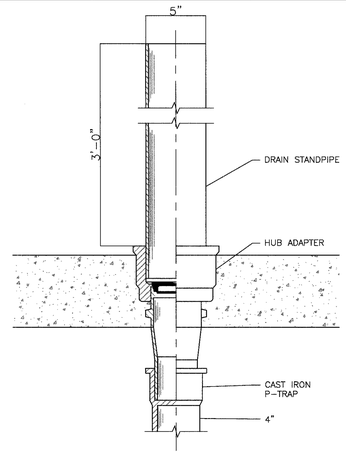

B6 HUB DRAIN AND STANDPIPE
NOT TO SCALE

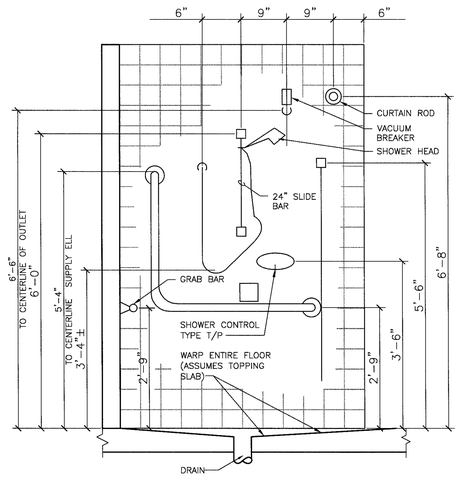

D4 PATIENT SHOWER
NOT TO SCALE

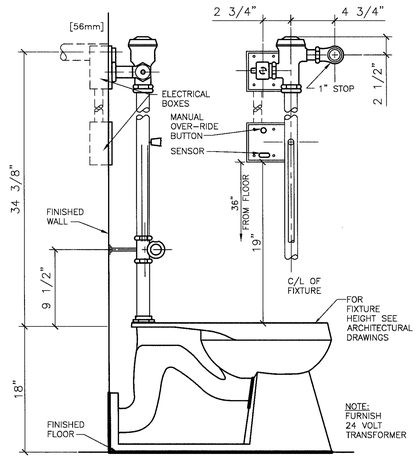

D6 WATER CLOSET DETAIL - SENSOR OPERATED
NOT TO SCALE

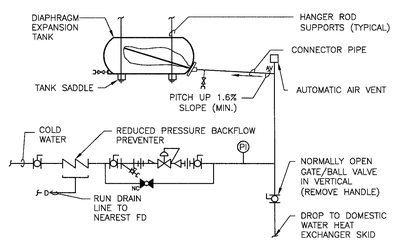

NOTES:
1. SEE EXPANSION TANK SYSTEM SCHEDULE FOR COMPONENT SIZES.
2. SET PRESSURE REDUCING VALVE SO PRESSURE IS AT A MINIMUM OF 50PSI.

F4 HORIZONTAL EXPANSION TANK - PIPING CONNECTIONS
NOT TO SCALE

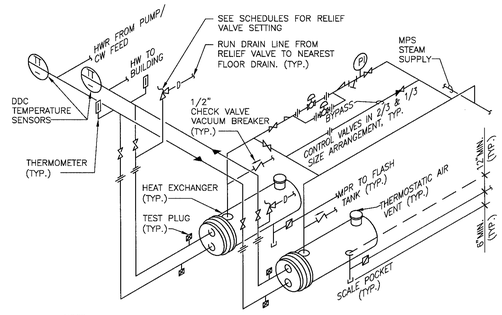

NOTE:
1. THE ABOVE DETAIL SHOWS REQUIRED PIPING FOR TWO HEAT EXCHANGERS IN PARALLEL.
2. PROVIDE SADDLE SUPPORTS AND LEGS OR HANGERS FOR HEAT EXCHANGER. MOUNTING HEIGHT SHALL BE ADJUSTED TO FACILITATE GRAVITY RETURN OF STEAM CONDENSATE.
3. MAKE THE BYPASS THE SAME SIZE AS THE CONNECTIONS TO THE CONTROL VALVES.
4. CONTROL VALVES SHALL BE IN A $\frac{1}{3}$ AND $\frac{2}{3}$ SIZE ARRANGEMENT.

F6 HEAT EXCHANGER - DOMESTIC HOT WATER
NOT TO SCALE

FULLY SPRINKLERED
BID DOCUMENTS - FOR CONSTRUCTION

Revisions	Date

CONSULTANTS:

STATE OF MICHIGAN
BLAINE CAMIEL VAN GANSBEKE
ENGINEER No. 6201056550
PROFESSIONAL ENGINEER
9 Sept 2014

ARCHITECT/ENGINEERS:

PARADIGM
ENGINEERS AND CONSTRUCTORS
200 Envoy Circle #201, Louisville KY 40299 – PH: 502.339.8511 – www.paradigmusa.com

Drawing Title	PLUMBING DETAILS
Approved Project Director	
Project Title	RENOVATE 25 BED MEDICAL SURGICAL INPATIENT UNIT
Location	FAYETTEVILLE VAMC, 2300 RAMSEY ST., FAYETTEVILLE, NC 28304
Date	09-10-2014
Checked	KLP
Drawn	JDM
Project Number	565-13-103
Building Number	1
Drawing Number	PP502

Office of Construction and Facilities Management
Department of Veterans Affairs

VA FORM 08-6231

JOB: FAYETTEVILLE, N.C.
BUILDING: #1

SYSTEM: DOMESTIC WATER

POINT LEGEND		SYSTEM OUTPUTS		SYSTEM INPUTS			SYSTEM SOFTWARE/CONTROL		PAGE:
		BINARY	ANALOG	BINARY	ANALOG		ALARM PROCESSING	APPLICATION/FUNCTION	

SYSTEM COMPONENT:	POINT ID	ABBREVIATION	PRIORITY ADD-ALTERNATE NO.	ELECTRIC DEVICE STATUS/TRIP	OPEN/CLOSE	SWITCH COMMAND	VALVE POSITION	DAMPER POSITION	STATUS	ALARM	PRESSURE	HIGH HUMIDITY	HIGH STATIC PRESSURE	LOW TEMPERATURE	TEMPERATURE (DT)	PRESSURE	FLOW	PERCENT	DATA PRESSURE	HUMIDITY	SECONDS DELAY	LOCAL ADJUST. POINT	REMOTE ADJUST. POINT	HIGH LIMIT	LOW LIMIT	---	SCHEDULE START/STOP	FUNCTION	DUTY CYCLE	EMERGENCY ECONOMIZER	EMERGENCY ECONOMIZER	TEMPERATURE RESET	DEMAND LIMITING	TEMPERATURE OVERRIDE	STATIC PRESSURE RESET	---	---	PRESSURE/VOLUME CONTROL	FAILURE MODE CONTROL	SPACE TEMP CONTROL	FIRE COMMUNICATION	REMARKS
WATER TEMPERATURE	AI-1	EWT														●																											
RPBP INLET P	AI-2	INP															●																								●		
RPBP OUTLET P	AI-3	OUTP															●																								●		
PUMP PRESSURE	AI-4	PUMP															●						●																		●		
LEAVING WATER TEMP	AI-5	LWT								●																															●		
STEAM VALVE V1	AO-1	V1					●																																		●		
STEAM VALVE V2	AO-2	V2					●																																		●		

B5 POINTS LIST FOR DOMESTIC WATER HEATING
N.T.S.

NOTES

A. REFER TO PP SERIES SHEETS FOR NEW PLUMBING WORK.

B. ALL EXISTING PIPING, DUCTWORK, SPRINKLERS, CONDUIT, LIGHTING OR OTHER CONSTRUCTION SHALL BE RELOCATED AS REQUIRED FOR ALL DEMOLITION AND INSTALLATION WORK.

C. THE CONTRACTOR SHALL LOCATE ALL NEW CONCRETE PENETRATIONS SUCH THAT THE PENETRATION DOES NOT OCCUR IN A CONCRETE BEAM OR PAN RIB.

D. THE PLUMBING CONTRACTOR SHALL REFERENCE DRAWINGS GI102 TO GI110 FOR PHASING REQUIREMENTS OF PROJECT. PHASING SHALL BE INCLUDED IN BASE BID.

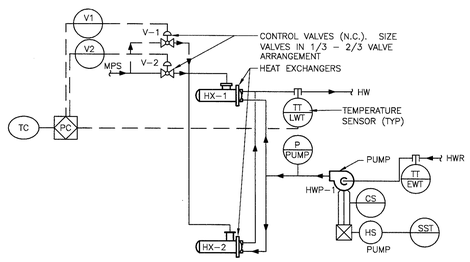

SEQUENCE OF OPERATION:
1. STEAM CONTROL VALVE SHALL MODULATE TO MAINTAIN THE LEAVING HOT WATER TEMPERATURE AT SET POINT (140°F)

VALVE SEQUENCE:
1. V1 (⅓ CAPACITY) MODULATING FULLY OPEN TO MAINTAIN SET POINT
2. V2 (⅔ CAPACITY) MODULATE FULLY OPEN TO MAINTAIN SET POINT.

E2 DUAL HEAT EXCHANGER CONTROLS (DOMESTIC WATER HEATING SYSTEM)
N.T.S.

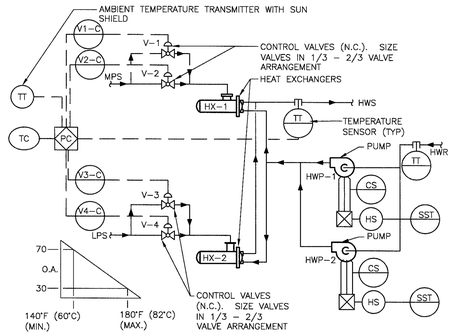

SEQUENCE OF OPERATION:
1. STEAM CONTROL VALVE SHALL MODULATE TO MAINTAIN THE LEAVING HOT WATER TEMPERATURE AT SET POINT.
2. THE LEAVING HOT WATER TEMPERATURE SHALL BE RESET INVERSELY WITH THE OUTDOOR TEMPERATURE AS SCHEDULED.
3. THE LEAD AND LAG PUMPS AND HEAT EXCHANGERS SHALL BE SEQUENTIAL BY THE OPERATOR CONTROLS AT THE PRE-DETERMINED INTERVAL (USUALLY 7 DAYS). IN THE EVENT THE PUMP FAILS TO START WITHIN 30 SECONDS, AN ALARM SHALL BE INITIATED AND THE SECOND PUMP SHALL START AUTOMATICALLY.

VALVE SEQUENCE:
1. V1 (⅓ CAPACITY) MODULATING FULLY OPEN TO MAINTAIN SET POINT
2. V2 (⅔ CAPACITY) MODULATE FULLY OPEN TO MAINTAIN SET POINT.
3. BOTH V1 & V2 MODULATE TOGETHER TO MAINTAIN SET POINT.

E5 DUAL HEAT EXCHANGER CONTROLS (HEATING SYSTEM)
N.T.S.

FULLY SPRINKLERED
BID DOCUMENTS - FOR CONSTRUCTION

Revisions	Date

CONSULTANTS:

10 Sept 2014
STATE OF MICHIGAN
BLAINE CAMIEL VAN GANSBEKE
ENGINEER
No. 6201056550
PROFESSIONAL ENGINEER

ARCHITECT/ENGINEERS:
PARADIGM
ENGINEERS AND CONSTRUCTORS
200 Envoy Circle #201, Louisville KY 40299 – PH: 502.339.8511 – www.paradigmusa.com

Drawing Title: PLUMBING CONTROL DETAILS
Approved Project Director
Project Title: RENOVATE 25 BED MEDICAL SURGICAL INPATIENT UNIT
Location: FAYETTEVILLE VAMC, 2300 RAMSEY ST., FAYETTEVILLE, NC 28304
Date: 09-10-2014
Checked: KLP
Drawn: JDM
Project Number: 565-13-103
Building Number: 1
Drawing Number: PP503
Office of Construction and Facilities Management
Department of Veterans Affairs

VA FORM 08-6231

NOTES

A. REFER TO PP SERIES SHEETS FOR NEW PLUMBING WORK.

B. ALL EXISTING PIPING, DUCTWORK, SPRINKLERS, CONDUIT, LIGHTING OR OTHER CONSTRUCTION SHALL BE RELOCATED AS REQUIRED FOR ALL DEMOLITION AND INSTALLATION WORK.

C. THE CONTRACTOR SHALL LOCATE ALL NEW CONCRETE PENETRATIONS SUCH THAT THE PENETRATION DOES NOT OCCUR IN A CONCRETE BEAM OR PAN RIB.

D. THE PLUMBING CONTRACTOR SHALL REFERENCE DRAWINGS GI102 TO GI110 FOR PHASING REQUIREMENTS OF PROJECT. PHASING SHALL BE INCLUDED IN BASE BID.

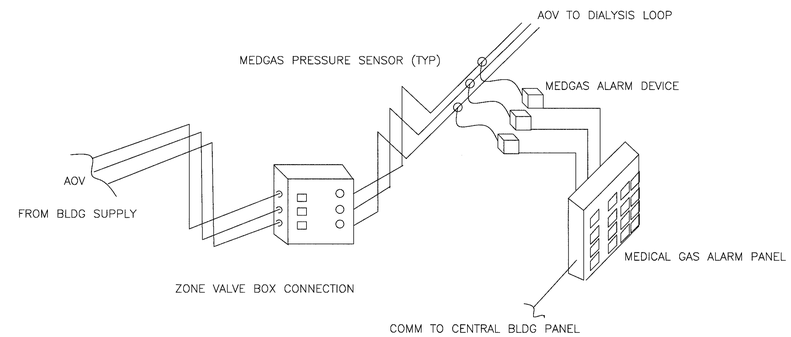

C7 MEDICAL GAS ALARM PANEL SCHEDULE
N.T.S.

MEDICAL GAS ALARM PANEL SCHEDULE

LOCATION	TYPE OF PANEL	GAGES	SERVICE INDICATOR LIGHTS
NURSING WING	MASTER (SYSTEM) ALARM PANEL	NO	OXYGEN LINE PRESSURE LOW OXYGEN LINE PRESSURE HIGH MEDICAL AIR PRESSURE LOW MEDICAL AIR PRESSURE HIGH MEDICAL VACUUM LINE VACUUM LOW MEDICAL VACUUM FILTER BACK PRESSURE TEST BUTTON
PATIENT AREAS	AREA (ZONE) ALARM PANEL	YES	OXYGEN LINE PRESSURE ABNORMAL MEDICAL AIR LINE PRESSURE ABNORMAL MEDICAL VACUUM LINE VACUUM LOW TEST BUTTON

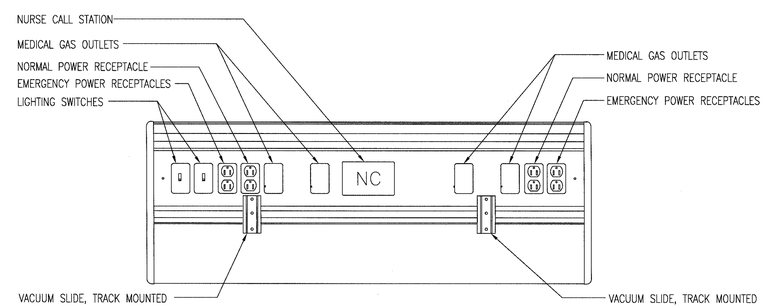

NOTES:
1. COORDINATE EXACT DEVICE LOCATIONS, QUANTITIES ETC WITH ARCHITECTURAL DETAILS & SPECIFICATIONS.
2. COORDINATE ALL CONNECTIONS WITH PATIENT PREFABRICATED HEADWALL UNIT MANUFACTURER.
3. DEVICE, RECEPTACLES, SWITCHES ETC. ARE FURNISHED WITH UNIT. CONTRACTOR SHALL WIRE TO EACH DEVICE.
4. PROVIDE ALL ROUGHIN COMPONENTS REQUIRED BY MANUFACTURER. WHETHER INDICATED OR NOT.
5. FINISH TO BE COORDINATED WITH VA STANDARDS.

F7 MEDICAL GAS HEADWALL DETAIL
N.T.S.

FULLY SPRINKLERED
BID DOCUMENTS - FOR CONSTRUCTION

Revisions	Date

CONSULTANTS:

STATE OF MICHIGAN
BLAINE CAMIEL VAN GANSBEKE
ENGINEER
No. 6201056550
LICENSED PROFESSIONAL ENGINEER
Oct 2014

ARCHITECT/ENGINEERS:
PARADIGM
ENGINEERS AND CONSTRUCTORS
200 Envoy Circle #201, Louisville KY 40299 – PH: 502.339.8511 – www.paradigmusa.com

Drawing Title: MEDICAL GAS DETAILS
Approved Project Director:
Project Title: RENOVATE 25 BED MEDICAL SURGICAL INPATIENT UNIT
Location: FAYETTEVILLE VAMC, 2300 RAMSEY ST., FAYETTEVILLE, NC 28304
Date: 09-10-2014 | Checked: KLP | Drawn: JDM
Project Number: 565-13-103
Building Number: 1
Drawing Number: PP504
Office of Construction and Facilities Management
Department of Veterans Affairs

VA FORM 08-6231

NOTES

A. REFER TO PP SERIES SHEETS FOR NEW PLUMBING WORK.

B. ALL EXISTING PIPING, DUCTWORK, SPRINKLERS, CONDUIT, LIGHTING OR OTHER CONSTRUCTION SHALL BE RELOCATED AS REQUIRED FOR ALL DEMOLITION AND INSTALLATION WORK.

C. THE CONTRACTOR SHALL LOCATE ALL NEW CONCRETE PENETRATIONS SUCH THAT THE PENETRATION DOES NOT OCCUR IN A CONCRETE BEAM OR PAN RIB.

D. THE PLUMBING CONTRACTOR SHALL REFERENCE DRAWINGS GI102 TO GI110 FOR PHASING REQUIREMENTS OF PROJECT. PHASING SHALL BE INCLUDED IN BASE BID.

PLUMBING FIXTURE SCHEDULE

MARK	DESCRIPTION	WASTE PIPE	VENT PIPE	COLD WATER	HOT WATER	WASTE FIXTURE UNITS	WATER FIXTURE UNITS	WRIST BLADE HANDLES	ELECTRIC SENSOR	REMARKS
		IN	IN	IN	IN					
P-115	WATER CLOSET FLOOR MOUNT	3	2	1-1/4	–	6	10	N/A	YES	
P-421	LAVATORY	2	1-1/2	1/2	1/2	2	2	N/A	YES	
P-422	LAVATORY	2	1-1/2	1/2	1/2	2	2	N/A	YES	
P-501	SINK SERVICE FLOOR MOUNT	3	2	3/4	3/4	3	4	N/A	NO	
P-524	DBL. COMP. SINK SERVICE	3	2	1/2	1/2	3	4	N/A	NO	
P-528	SINGLE COMP. SINK SERVICE	3	2	1/2	1/2	2	2	N/A	NO	
P-609	ELECTRIC WATER COOLER	2	1-1/2	1/2	–	1	1	N/A	NO	
P-707	EMERGENCY SHOWER	–	–	1/2	1/2	0	1	N/A	NO	
P-711	SHOWER	–	–	3/4	3/4	–	10	N/A	NO	
P-804	HOSE BIBB	–	–	1/2	–	0	1	N/A	NO	

PLUMBING DRAIN SCHEDULE

MARK	FIXTURE	MANUFACTURER	MODEL NO.	TYPE	MATERIAL	STYLE	DRAIN SIZE	REMARKS
FD1	FLOOR DRAIN	ZURIN	Z1726	NO-HUB	CAST IRON/NICKEL BRONZE TOP	6" ROUND	PER DWG	

STEAM TO WATER HEAT EXCHANGER SCHEDULE

MARK	LOCATION	AREA AND/OR BLDG SERVED	SYSTEM AND/OR SERVICE	TYPE	WATER CONDITIONS				STEAM PRESSURE		CONTROL VALVE	TRAP		REMARKS
					FLOW	EWT	LWT	WPD	ENT CONTROL VALVE	ENT HEAT EXCHANGER		TRAP NO.	CAPACITY	
					GPM	°F	°F	FT	PSIG	PSIG	LB/HR		LB/HR	
1-DWHX-A	2A132	A WING	DOMESTIC HOT WATER	DOUBLE WALL, SEMI-INSTANTANEOUS, SHELL & TUBE	80	50	140	16	15	7	3,800	1-TP2	4,000	REFER TO MP601 FOR PIPING SCH.
1-DWHX-B	2B118	B WING	DOMESTIC HOT WATER	DOUBLE WALL, SEMI-INSTANTANEOUS, SHELL & TUBE	80	50	140	16	15	7	3,800	1-TP5	4,000	REFER TO MP601 FOR PIPING SCH.
1-DWHX-C	2C120	C WING	DOMESTIC HOT WATER	DOUBLE WALL, SEMI-INSTANTANEOUS, SHELL & TUBE	80	50	130	16	15	7	3,800	1-TP8	4,000	REFER TO MP601 FOR PIPING SCH.

PLUMBING PUMP SCHEDULE

MARK	LOCATION	AREA AND/OR BLDG SERVED	SYSTEM AND/OR SERVICE	TYPE	CIRCULATING FLUID							MOTOR ELECTRICAL					REMARKS
					FLUID	FLOW	HEAD	NPSH AVAILABLE	TEMP	SP. GR.	MIN. % EFF.	NOMINAL POWER	PHASE	VOLT	MAX. RPM	SPEED CONTROL	
						GPM	FT	FT	°F			HP					
1-DWHX-P1	2A132	A WING	DOMESTIC	INLINE	DOMESTIC WATER	80	60	N/A	140	1	70	2.0	3	208	1,750	CONSTANT	
1-DWHX-P2	2B118	B WING	DOMESTIC	INLINE	DOMESTIC WATER	80	60	N/A	140	1	70	2.0	3	208	1,750	CONSTANT	
1-DWHX-P3	2C120	C WING	DOMESTIC	INLINE	DOMESTIC WATER	80	60	N/A	140	1	70	2.0	3	208	1,750	CONSTANT	

DOMESTIC WATER THERMAL EXPANSION TANK SCHEDULE

MARK	LOCATION	TYPE	SYSTEM TEMPERATURE RANGE		INITIAL PRESSURE IN TANK	MAX. OPERATING PRESSURE	RELIEF VALVE	MIN. TANK VOLUME	MIN. ACCEPT VOLUME	PIPE SIZE TO TANK	REMARKS
			MIN.	MAX.							
			°F	°F	PSIG	PSIG	PSIG	GAL	GAL	IN	
1-DET-A	2A132	POTABLE THERMAL EXPANSION TANK	50	140	50	60	65	15	10.5	0.75	
1-DET-B	2B118	POTABLE THERMAL EXPANSION TANK	50	140	50	60	65	15	10.5	0.75	
1-DET-C	2C120	POTABLE THERMAL EXPANSION TANK	50	140	50	60	65	15	10.5	0.75	

FULLY SPRINKLERED
BID DOCUMENTS - FOR CONSTRUCTION

Revisions: Date

CONSULTANTS:

STATE OF MICHIGAN
BLAINE CAMIEL VAN GANSBEKE
ENGINEER No. 6201056550
LICENSED PROFESSIONAL ENGINEER
Sept. 2014

ARCHITECT/ENGINEERS:

PARADIGM
ENGINEERS AND CONSTRUCTORS
200 Envoy Circle #201, Louisville KY 40299 – PH: 502.339.8511 – www.paradigmusa.com

Drawing Title: PLUMBING SCHEDULES

Approved Project Director

Project Title: RENOVATE 25 BED MEDICAL SURGICAL INPATIENT UNIT

Location: FAYETTEVILLE VAMC
2300 RAMSEY ST, FAYETTEVILLE, NC 28304

Date: 09-10-2014 | Checked: KLP | Drawn: JDM

Project Number: 565-13-103

Building Number: 1

Drawing Number: PP601

Office of Construction and Facilities Management
Department of Veterans Affairs

VA FORM 08-6231

NOTES

A. REFER TO DWG. P-001 FOR LEGEND, ABBREVIATIONS, AND GENERAL NOTES RELATED TO THIS SHEET.

B. ALL EXISTING PIPING, DUCTWORK, SPRINKLERS, CONDUIT, LIGHTING OR OTHER CONSTRUCTION SHALL BE RELOCATED AS REQUIRED FOR ALL DEMOLITION AND INSTALLATION WORK.

C. REFER TO PD100 FOR WASTE/VENT DEMOLITION IN THE BASEMENT.

D. REFER TO PP100 FOR NEW PLUMBING WORK IN THE BASEMENT.

E. THE CONTRACTOR SHALL LOCATE ALL NEW CONCRETE PENETRATIONS SUCH THAT THE PENETRATION DOES NOT OCCUR IN A CONCRETE BEAM OR PAN RIB.

F. THE PLUMBING CONTRACTOR SHALL REFERENCE DRAWINGS GI102 TO GI110 FOR PHASING REQUIREMENTS OF PROJECT. PHASING SHALL BE INCLUDED IN BASE BID.

KEY NOTES

1. NEW SANITARY RISER; REFER TO PS104 FOR INFORMATION.
2. NEW SANITARY RISER; REFER TO PS105 FOR INFORMATION.
3. NEW SANITARY RISER; REFER TO PS106 FOR INFORMATION.
4. NEW SANITARY RISER; REFER TO PS107 FOR INFORMATION.
5. NEW SANITARY RISER; REFER TO PS108 FOR INFORMATION.
6. NEW SANITARY RISER; REFER TO PS111 FOR INFORMATION.

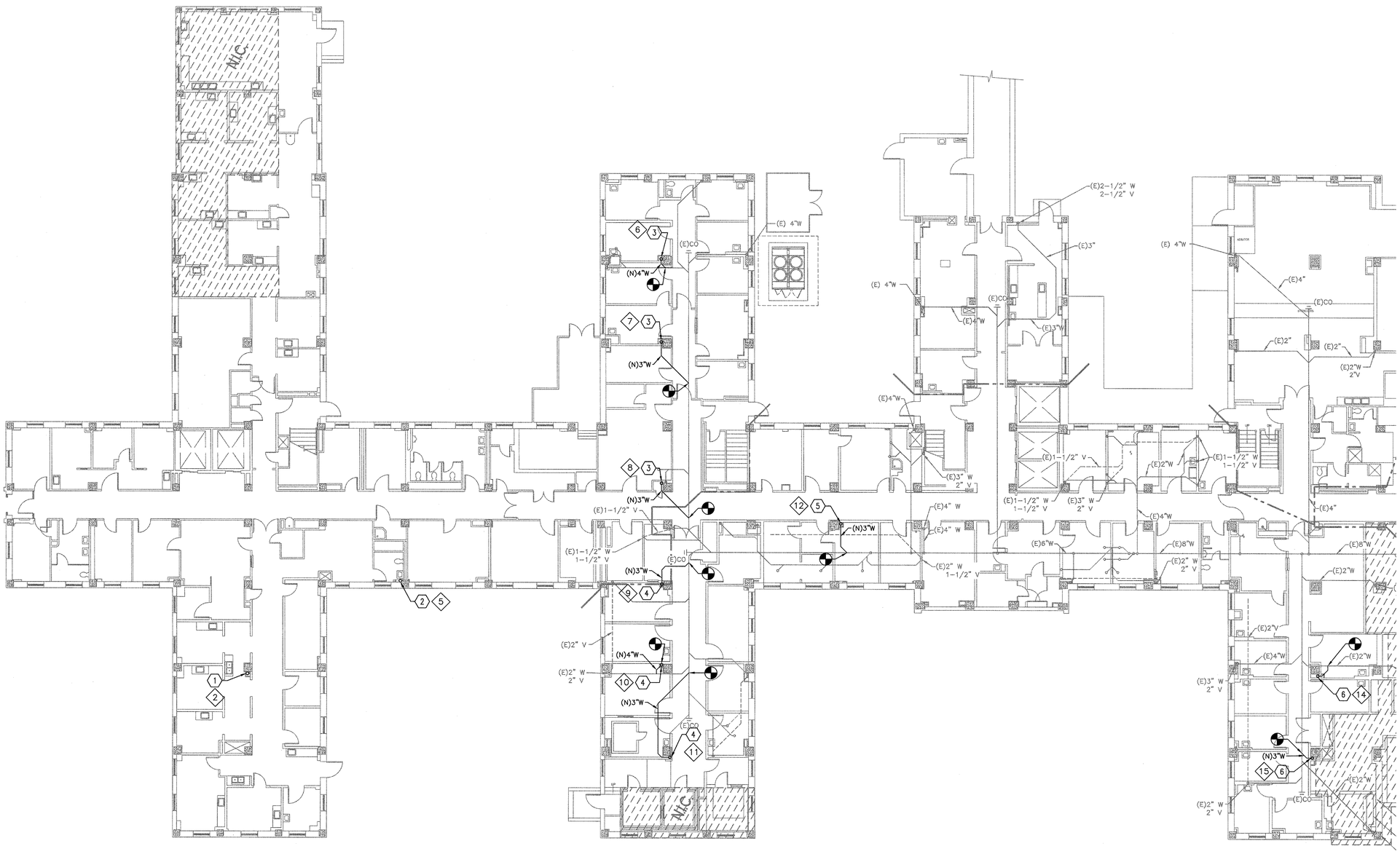

F1 PARTIAL FLOOR PLAN
3/32" = 1'-0"

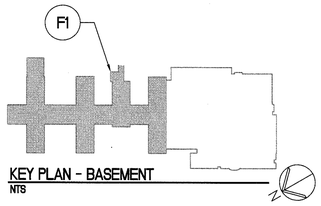

KEY PLAN - BASEMENT
NTS

FULLY SPRINKLERED
BID DOCUMENTS - FOR CONSTRUCTION

Revisions	Date

CONSULTANTS:

ARCHITECT/ENGINEERS:

PARADIGM
ENGINEERS AND CONSTRUCTORS
200 Envoy Circle #201, Louisville KY 40299 – PH: 502.339.8511 – www.paradigmusa.com

Drawing Title	SANITARY AND VENT PLAN BASEMENT
Approved Project Director	
Project Title	RENOVATE 25 BED MEDICAL SURGICAL INPATIENT UNIT
Location	FAYETTEVILLE VAMC, 2300 RAMSEY ST., FAYETTEVILLE, NC 28304
Date	09-10-2014
Checked	KLP
Drawn	JDM
Project Number	565-13-103
Building Number	1
Drawing Number	PS100

Office of Construction and Facilities Management
Department of Veterans Affairs

VA FORM 08-6231

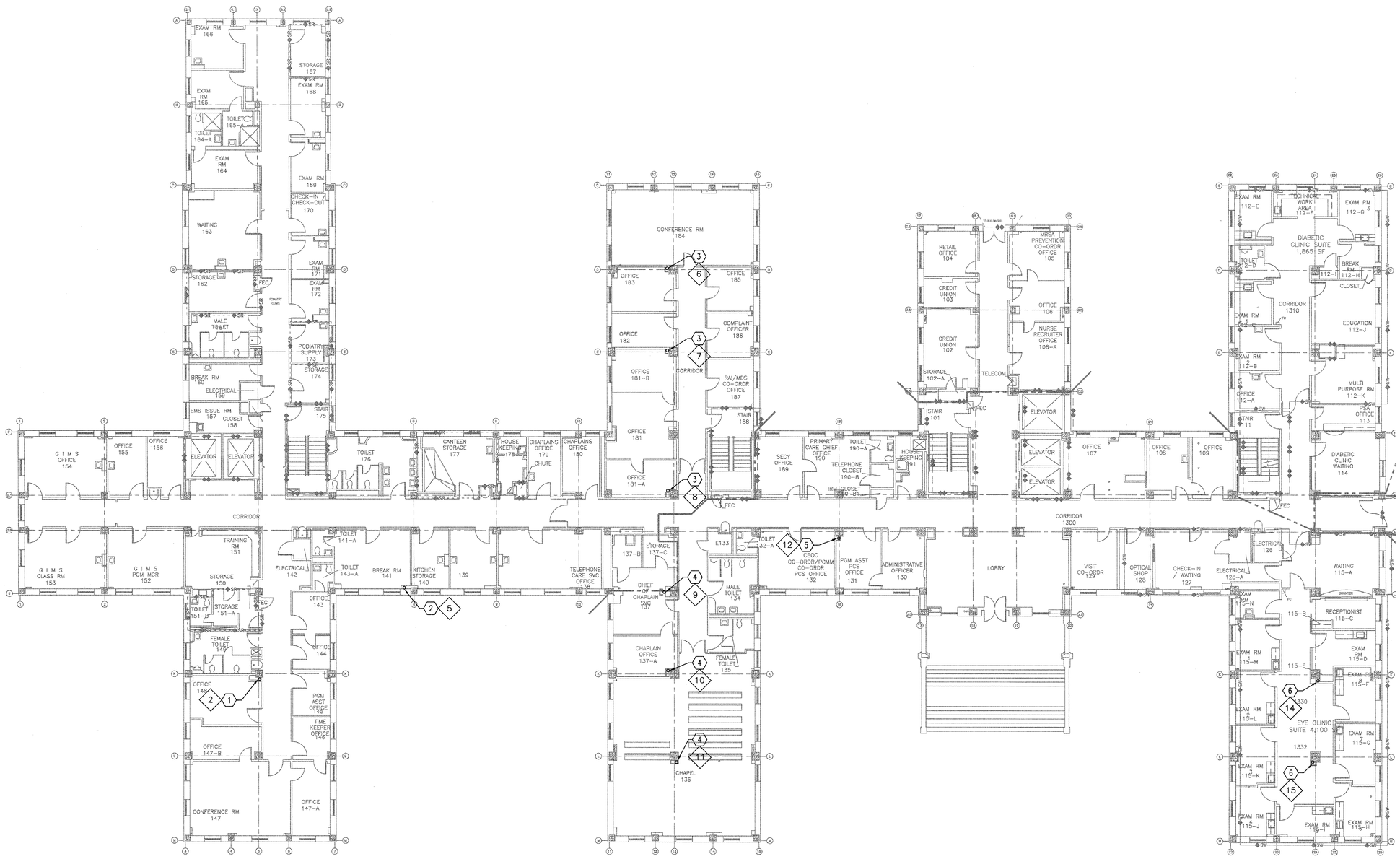

F1 PARTIAL FLOOR PLAN
3/32" = 1'-0"

NOTES

A. REFER TO DWG. P-001 FOR LEGEND, ABBREVIATIONS, AND GENERAL NOTES RELATED TO THIS SHEET.

B. ALL EXISTING PIPING, DUCTWORK, SPRINKLERS, CONDUIT, LIGHTING OR OTHER CONSTRUCTION SHALL BE RELOCATED AS REQUIRED FOR ALL DEMOLITION AND INSTALLATION WORK.

C. REFER TO PD101 FOR WASTE/VENT DEMOLITION ON THE FIRST FLOOR.

D. REFER TO PP101 FOR NEW PLUMBING WORK ON THE FIRST FLOOR.

E. THE CONTRACTOR SHALL LOCATE ALL NEW CONCRETE PENETRATIONS SUCH THAT THE PENETRATION DOES NOT OCCUR IN A CONCRETE BEAM OR PAN RIB.

F. THE PLUMBING CONTRACTOR SHALL REFERENCE DRAWINGS GI102 TO GI110 FOR PHASING REQUIREMENTS OF PROJECT. PHASING SHALL BE INCLUDED IN BASE BID.

KEY NOTES

1. NEW SANITARY RISER; REFER TO PS104 FOR INFORMATION.
2. NEW SANITARY RISER; REFER TO PS105 FOR INFORMATION.
3. NEW SANITARY RISER; REFER TO PS106 FOR INFORMATION.
4. NEW SANITARY RISER; REFER TO PS107 FOR INFORMATION.
5. NEW SANITARY RISER; REFER TO PS108 FOR INFORMATION.
6. NEW SANITARY RISER; REFER TO PS111 FOR INFORMATION.

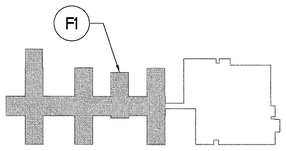

KEY PLAN - FIRST FLOOR
NTS

FULLY SPRINKLERED
BID DOCUMENTS - FOR CONSTRUCTION

Revisions:	Date

CONSULTANTS:

10 Sept 2014
STATE OF MICHIGAN
BLAINE CAMIEL VAN GANSBEKE
ENGINEER
6201056550
PROFESSIONAL ENGINEER

ARCHITECT/ENGINEERS:
PARADIGM
ENGINEERS AND CONSTRUCTORS
200 Envoy Circle #201, Louisville KY 40299 – PH: 502.339.8511 – www.paradigmusa.com

Drawing Title	SANITARY AND VENT PLAN FIRST FLOOR
Approved Project Director	
Project Title	RENOVATE 25 BED MEDICAL SURGICAL INPATIENT UNIT
Location	FAYETTEVILLE VAMC, 2300 RAMSEY ST, FAYETTEVILLE, NC 28304
Date	09-10-2014
Checked	KLP
Drawn	JDM
Project Number	565-13-103
Building Number	1
Drawing Number	PS101

Office of Construction and Facilities Management
Department of Veterans Affairs

VA FORM 08-6231

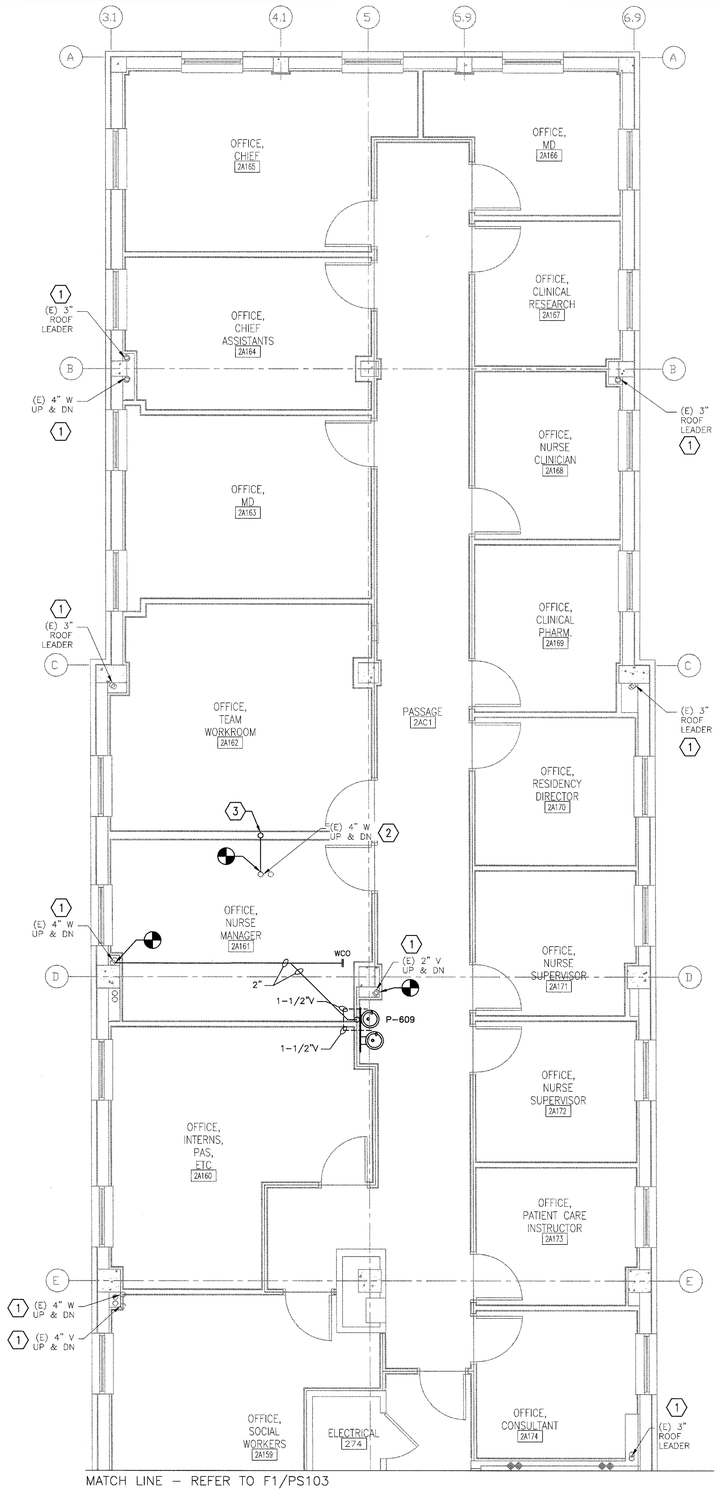

F5 SECOND FLOOR PLAN - WING A
1/4" = 1'-0"

NOTES

A. REFER TO DWG. P-001 FOR LEGEND, ABBREVIATIONS, AND GENERAL NOTES RELATED TO THIS SHEET.

B. ALL EXISTING PIPING, DUCTWORK, SPRINKLERS, CONDUIT, LIGHTING OR OTHER CONSTRUCTION SHALL BE RELOCATED AS REQUIRED FOR ALL DEMOLITION AND INSTALLATION WORK.

C. REFER TO PD102 FOR WASTE/VENT DEMOLITION ON THE SECOND FLOOR.

D. REFER TO PP102 FOR NEW PLUMBING WORK ON THE SECOND FLOOR.

E. THE CONTRACTOR SHALL LOCATE ALL NEW CONCRETE PENETRATIONS SUCH THAT THE PENETRATION DOES NOT OCCUR IN A CONCRETE BEAM OR PAN RIB.

F. THE PLUMBING CONTRACTOR SHALL REFERENCE DRAWINGS GI102 TO GI110 FOR PHASING REQUIREMENTS OF PROJECT. PHASING SHALL BE INCLUDED IN BASE BID.

KEY NOTES

1. EXISTING LINES TO REMAIN.
2. THESE LINES TO BE RELOCATED INTO A NEW PARTITION AS REQUIRED. CAP ABOVE CEILING AND BELOW FLOOR AS NECESSARY TO AVOID ANY DISRUPTION OF EXISTING SERVICE.
3. NEW LOCATIONS OF RELOCATED PIPING.

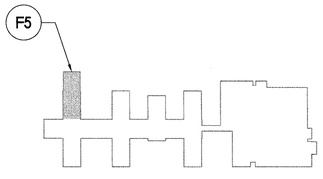

KEY PLAN - SECOND FLOOR
NTS

FULLY SPRINKLERED
BID DOCUMENTS - FOR CONSTRUCTION

Revisions:	Date

CONSULTANTS:

10 Sept 2014
STATE OF MICHIGAN
BLAINE CAMIEL VAN GANSREKER
ENGINEER
No. 6201056820
LICENSED PROFESSIONAL ENGINEER

ARCHITECT/ENGINEERS:

PARADIGM
ENGINEERS AND CONSTRUCTORS
200 Envoy Circle #201, Louisville KY 40299 – PH: 502.339.8511 – www.paradigmusa.com

Drawing Title	SANITARY AND VENT PLAN SECOND FLOOR WING A
Approved Project Director	
Project Title	RENOVATE 25 BED MEDICAL SURGICAL INPATIENT UNIT
Location	FAYETTEVILLE VAMC 2300 RAMSEY ST, FAYETTEVILLE, NC 28304
Date	09-10-2014
Checked	KLP
Drawn	JDM
Project Number	565-13-103
Building Number	1
Drawing Number	PS102

Office of Construction and Facilities Management
Department of Veterans Affairs

VA FORM 08-6231

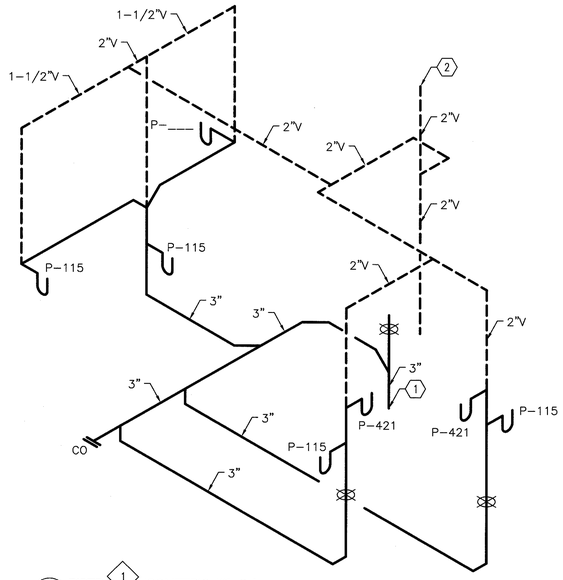

C1 RISER ISOMETRIC (17 dfu)
NOT TO SCALE

NOTES

A. REFER TO DWG. P-001 FOR LEGEND, ABBREVIATIONS, AND GENERAL NOTES RELATED TO THIS SHEET.

B. ALL EXISTING PIPING, DUCTWORK, SPRINKLERS, CONDUIT, LIGHTING OR OTHER CONSTRUCTION SHALL BE RELOCATED AS REQUIRED FOR ALL DEMOLITION AND INSTALLATION WORK.

C. REFER TO PD103 FOR WASTE/VENT DEMOLITION ON THE SECOND FLOOR.

D. REFER TO PP103 FOR NEW PLUMBING WORK ON THE SECOND FLOOR.

E. THE CONTRACTOR SHALL LOCATE ALL NEW CONCRETE PENETRATIONS SUCH THAT THE PENETRATION DOES NOT OCCUR IN A CONCRETE BEAM OR PAN RIB.

F. THE PLUMBING CONTRACTOR SHALL REFERENCE DRAWINGS GI102 TO GI110 FOR PHASING REQUIREMENTS OF PROJECT. PHASING SHALL BE INCLUDED IN BASE BID.

KEY NOTES

1. NEW 3" WASTE BELOW FLOOR DOWN TO CRAWLSPACE.
2. NEW 2" VENT ABOVE FLOOR TO ROOF.
3. EXISTING LINES TO REMAIN.
4. THESE LINES TO BE RELOCATED INTO A NEW PORTION AS REQUIRED. CAP ABOVE CEILING AND BELOW FLOOR AS NECESSARY TO AVOID ANY DISRUPTION OF EXISTING SERVICE.
5. NEW LOCATIONS OF RELOCATED PIPING.

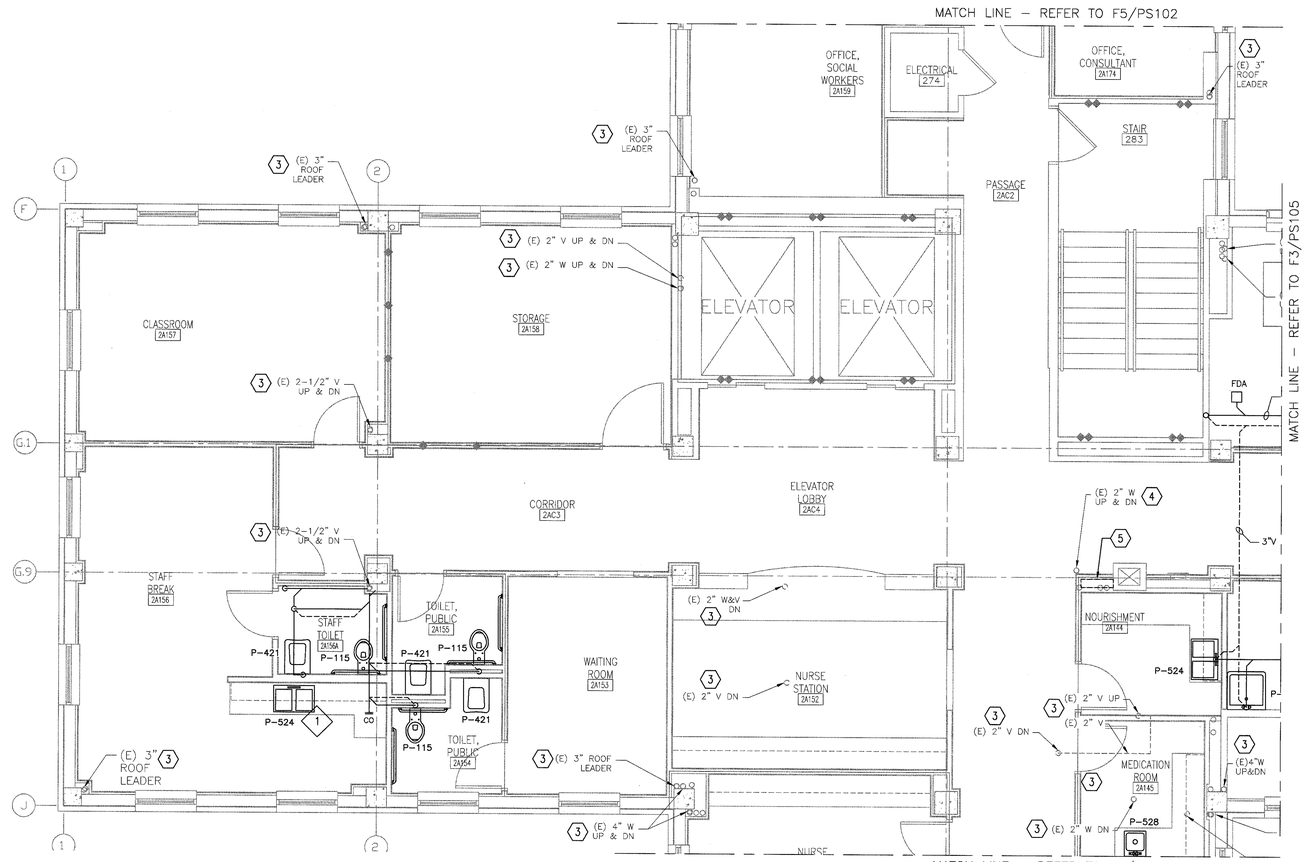

F3 SECOND FLOOR PLAN - WING A
1/4" = 1'-0"

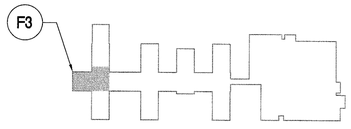

KEY PLAN - SECOND FLOOR
NTS

FULLY SPRINKLERED
BID DOCUMENTS - FOR CONSTRUCTION

Revisions	Date

CONSULTANTS:

STATE OF MICHIGAN
BLAINE CARRIEL VAN GANSBEKE
ENGINEER
No. 6201055550
LICENSED PROFESSIONAL ENGINEER
9-9-2014

ARCHITECT/ENGINEERS:
PARADIGM
ENGINEERS AND CONSTRUCTORS
200 Envoy Circle #201, Louisville KY 40299 – PH: 502.339.8511 – www.paradigmusa.com

Drawing Title	SANITARY AND VENT PLAN SECOND FLOOR WING A
Approved Project Director	
Project Title	RENOVATE 25 BED MEDICAL SURGICAL INPATIENT UNIT
Location	FAYETTEVILLE VAMC 2300 RAMSEY ST, FAYETTEVILLE, NC 28304
Date	09-10-2014
Checked	KLP
Drawn	JDM
Project Number	565-13-103
Building Number	1
Drawing Number	PS103

Office of Construction and Facilities Management
Department of Veterans Affairs

VA FORM 08-6231

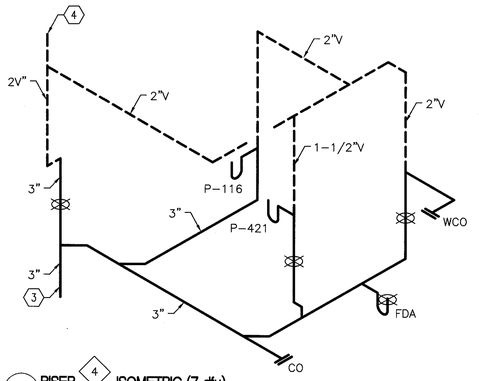

B1 RISER 4 ISOMETRIC (7 dfu)
NOT TO SCALE

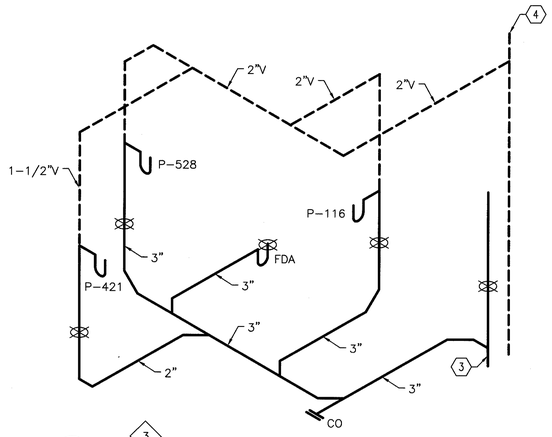

D1 RISER 3 ISOMETRIC (9 dfu)
NOT TO SCALE

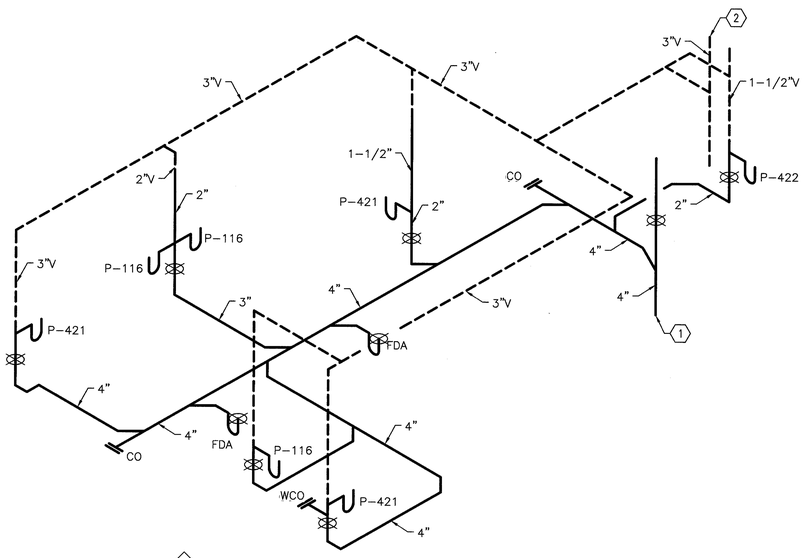

F1 RISER 2 ISOMETRIC (22 dfu)
NOT TO SCALE

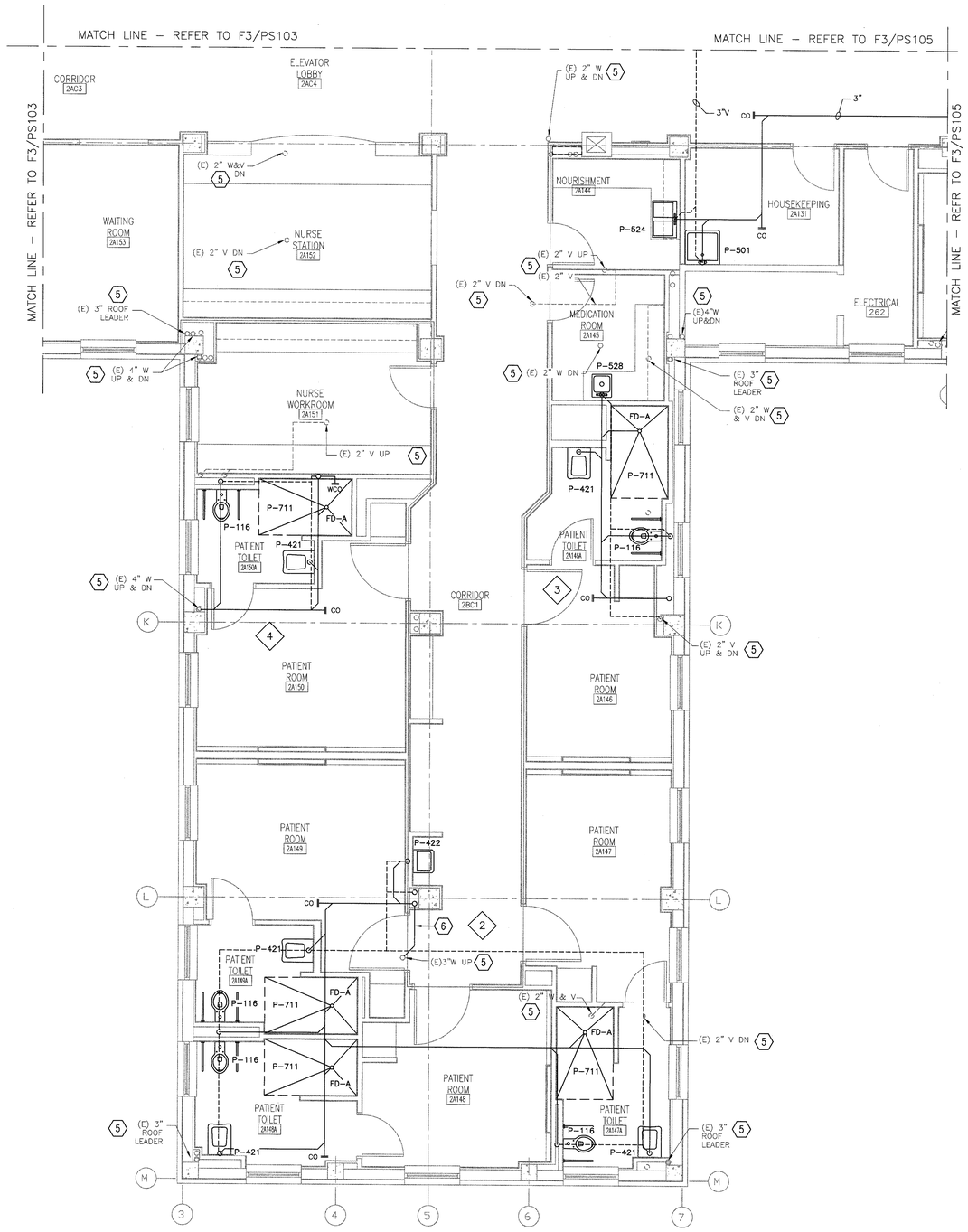

F4 SECOND FLOOR PLAN - WING A
1/4" = 1'-0"

NOTES

A. REFER TO DWG. P-001 FOR LEGEND, ABBREVIATIONS, AND GENERAL NOTES RELATED TO THIS SHEET.

B. ALL EXISTING PIPING, DUCTWORK, SPRINKLERS, CONDUIT, LIGHTING OR OTHER CONSTRUCTION SHALL BE RELOCATED AS REQUIRED FOR ALL DEMOLITION AND INSTALLATION WORK.

C. REFER TO PD104 FOR WASTE/VENT DEMOLITION ON THE SECOND FLOOR.

D. REFER TO PP104 FOR NEW PLUMBING WORK ON THE SECOND FLOOR.

E. THE CONTRACTOR SHALL LOCATE ALL NEW CONCRETE PENETRATIONS SUCH THAT THE PENETRATION DOES NOT OCCUR IN A CONCRETE BEAM OR PAN RIB.

F. THE PLUMBING CONTRACTOR SHALL REFERENCE DRAWINGS GI102 TO GI110 FOR PHASING REQUIREMENTS OF PROJECT. PHASING SHALL BE INCLUDED IN BASE BID.

KEY NOTES

1. NEW 4" WASTE BELOW FLOOR DOWN TO CRAWLSPACE.
2. NEW 3" VENT ABOVE FLOOR TO ROOF.
3. NEW 3" WASTE BELOW FLOOR DOWN TO CRAWLSPACE.
4. NEW 2" VENT ABOVE FLOOR TO ROOF.
5. EXISTING LINES TO REMAIN.
6. NEW LOCATION OF RELOCATED PIPE.

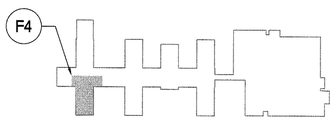

KEY PLAN - SECOND FLOOR
NTS

FULLY SPRINKLERED
BID DOCUMENTS - FOR CONSTRUCTION

Revisions:	Date

CONSULTANTS:

10 Sept 2014
STATE OF MICHIGAN
BLAINE CAMIEL VAN GANSBEKE
ENGINEER
No. 6201056550
LICENSED PROFESSIONAL ENGINEER

ARCHITECT/ENGINEERS:
PARADIGM
ENGINEERS AND CONSTRUCTORS
200 Envoy Circle #201, Louisville KY 40299 – PH: 502.339.8511 – www.paradigmusa.com

Drawing Title	SANITARY AND VENT PLAN SECOND FLOOR WING A
Approved Project Director	
Project Title	RENOVATE 25 BED MEDICAL SURGICAL INPATIENT UNIT
Location	FAYETTEVILLE VAMC 2300 RAMSEY ST, FAYETTEVILLE, NC 28304
Date	09-10-2014
Checked	KLP
Drawn	JDM
Project Number	565-13-103
Building Number	1
Drawing Number	PS104

Office of Construction and Facilities Management
Department of Veterans Affairs

VA FORM 08-6231

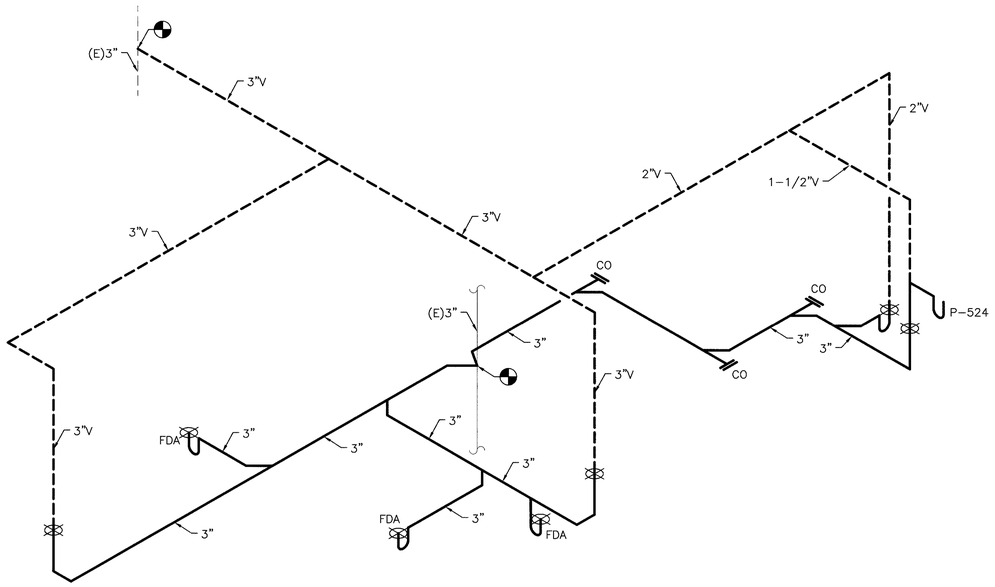

C1 RISER A EX B EX ISOMETRIC
NOT TO SCALE

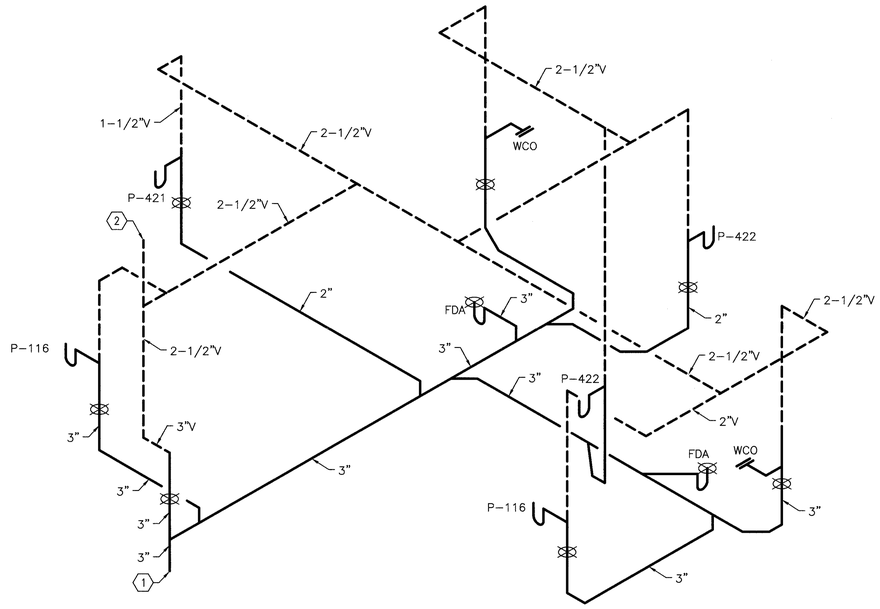

C5 RISER 5 ISOMETRIC (15 dfu)
NOT TO SCALE

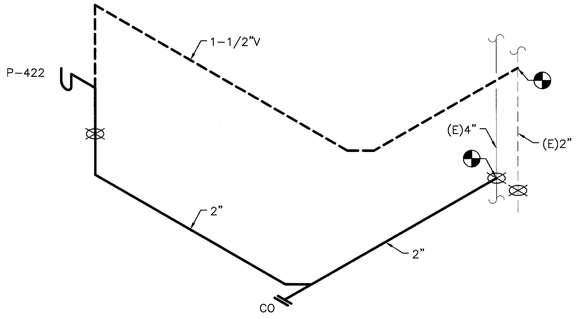

E1 RISER C ISOMETRIC
NOT TO SCALE

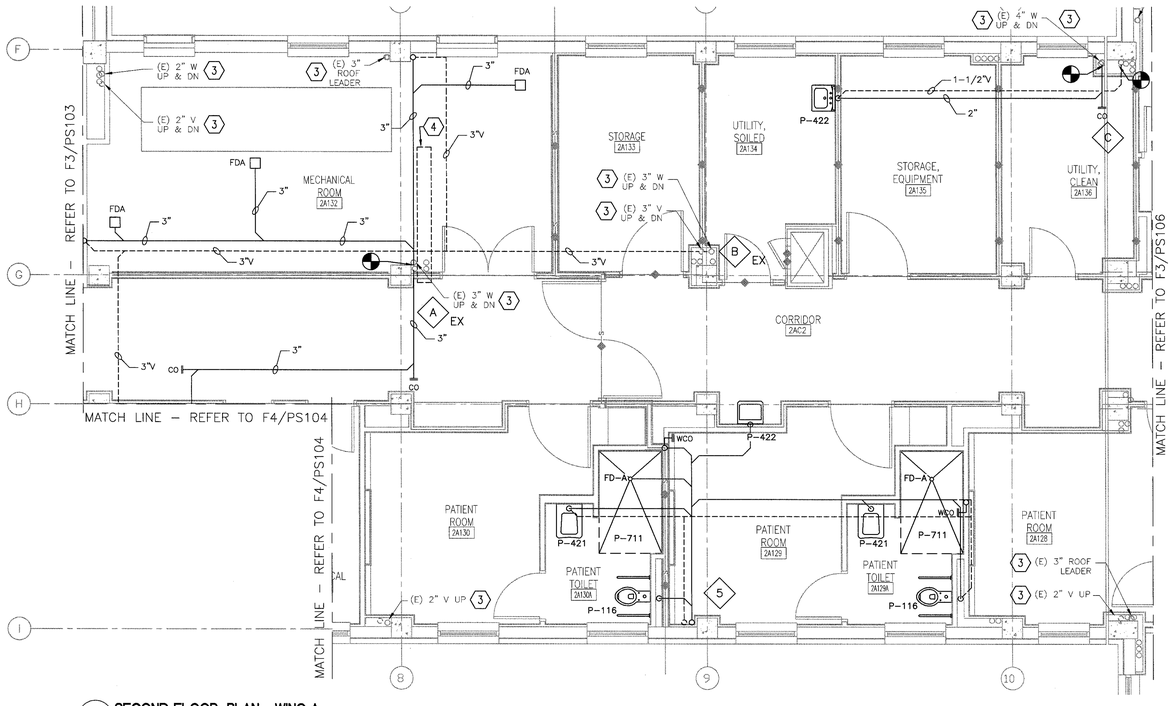

F3 SECOND FLOOR PLAN - WING A
1/4" = 1'-0"

NOTES

A. REFER TO DWG. P-001 FOR LEGEND, ABBREVIATIONS, AND GENERAL NOTES RELATED TO THIS SHEET.

B. ALL EXISTING PIPING, DUCTWORK, SPRINKLERS, CONDUIT, LIGHTING OR OTHER CONSTRUCTION SHALL BE RELOCATED AS REQUIRED FOR ALL DEMOLITION AND INSTALLATION WORK.

C. REFER TO PD105 FOR WASTE/VENT DEMOLITION ON THE SECOND FLOOR.

D. REFER TO PP105 FOR NEW PLUMBING WORK ON THE SECOND FLOOR.

E. THE CONTRACTOR SHALL LOCATE ALL NEW CONCRETE PENETRATIONS SUCH THAT THE PENETRATION DOES NOT OCCUR IN A CONCRETE BEAM OR PAN RIB.

F. THE PLUMBING CONTRACTOR SHALL REFERENCE DRAWINGS GI102 TO GI110 FOR PHASING REQUIREMENTS OF PROJECT. PHASING SHALL BE INCLUDED IN BASE BID.

KEY NOTES

1. NEW 3" WASTE BELOW FLOOR DOWN TO CRAWLSPACE.
2. NEW 2-1/2" VENT ABOVE FLOOR TO ROOF.
3. EXISTING LINES TO REMAIN.
4. EXISTING PLUMBING SHAFT TO REMAIN IN NEW MECHANICAL ROOM.

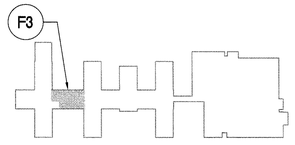

KEY PLAN - SECOND FLOOR
NTS

FULLY SPRINKLERED
BID DOCUMENTS - FOR CONSTRUCTION

Revisions	Date

CONSULTANTS:

STATE OF MICHIGAN — BLAINE CAMIEL VAN GANSBEKE — ENGINEER — No. 6201056550 — PROFESSIONAL ENGINEER

ARCHITECT/ENGINEERS:

PARADIGM ENGINEERS AND CONSTRUCTORS
200 Envoy Circle #201, Louisville KY 40299 – PH: 502.339.8511 – www.paradigmusa.com

Drawing Title	SANITARY AND VENT PLAN SECOND FLOOR WING A
Approved Project Director	
Project Title	RENOVATE 25 BED MEDICAL SURGICAL INPATIENT UNIT
Location	FAYETTEVILLE VAMC, 2300 RAMSEY ST, FAYETTEVILLE, NC 28304
Date	09-10-2014
Checked	KLP
Drawn	JDM
Project Number	565-13-103
Building Number	1
Drawing Number	PS105

Office of Construction and Facilities Management
Department of Veterans Affairs

VA FORM 08-6231

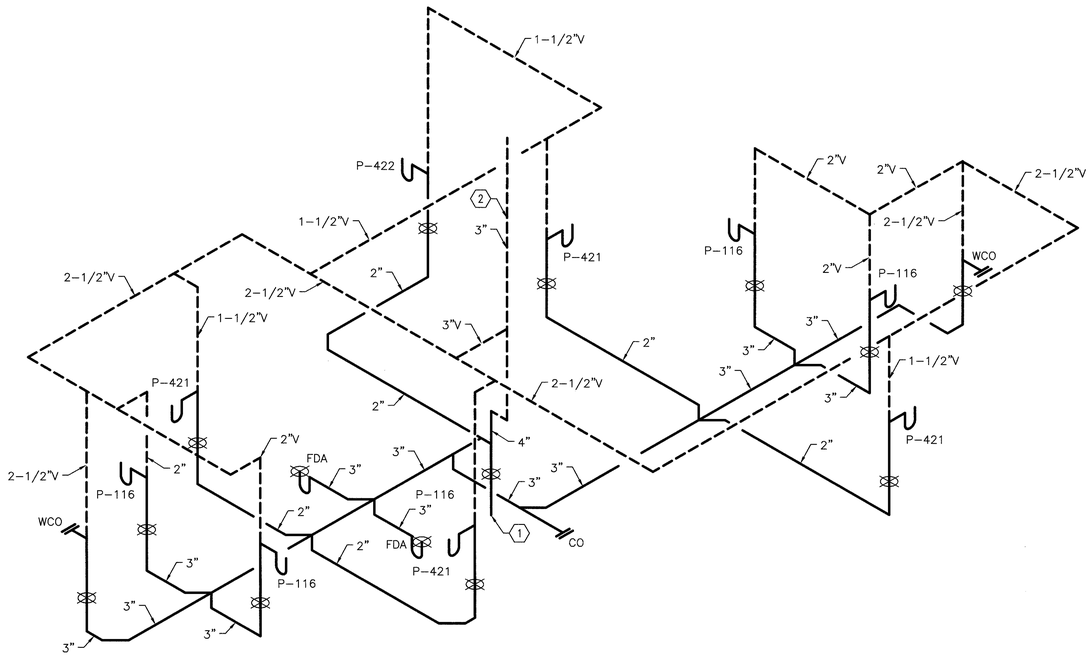

D1 RISER ◇6 ISOMETRIC (28 dfu)
NOT TO SCALE

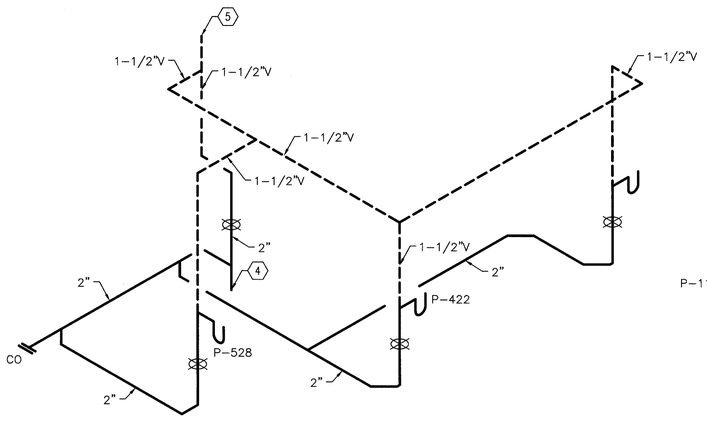

D1 RISER ◇7 ISOMETRIC (4 dfu)
NOT TO SCALE

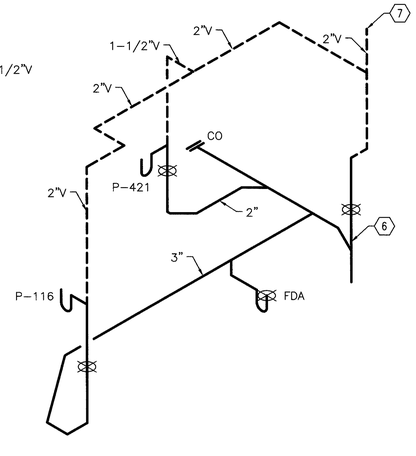

F3 RISER ◇8 ISOMETRIC (7dfu)
NOT TO SCALE

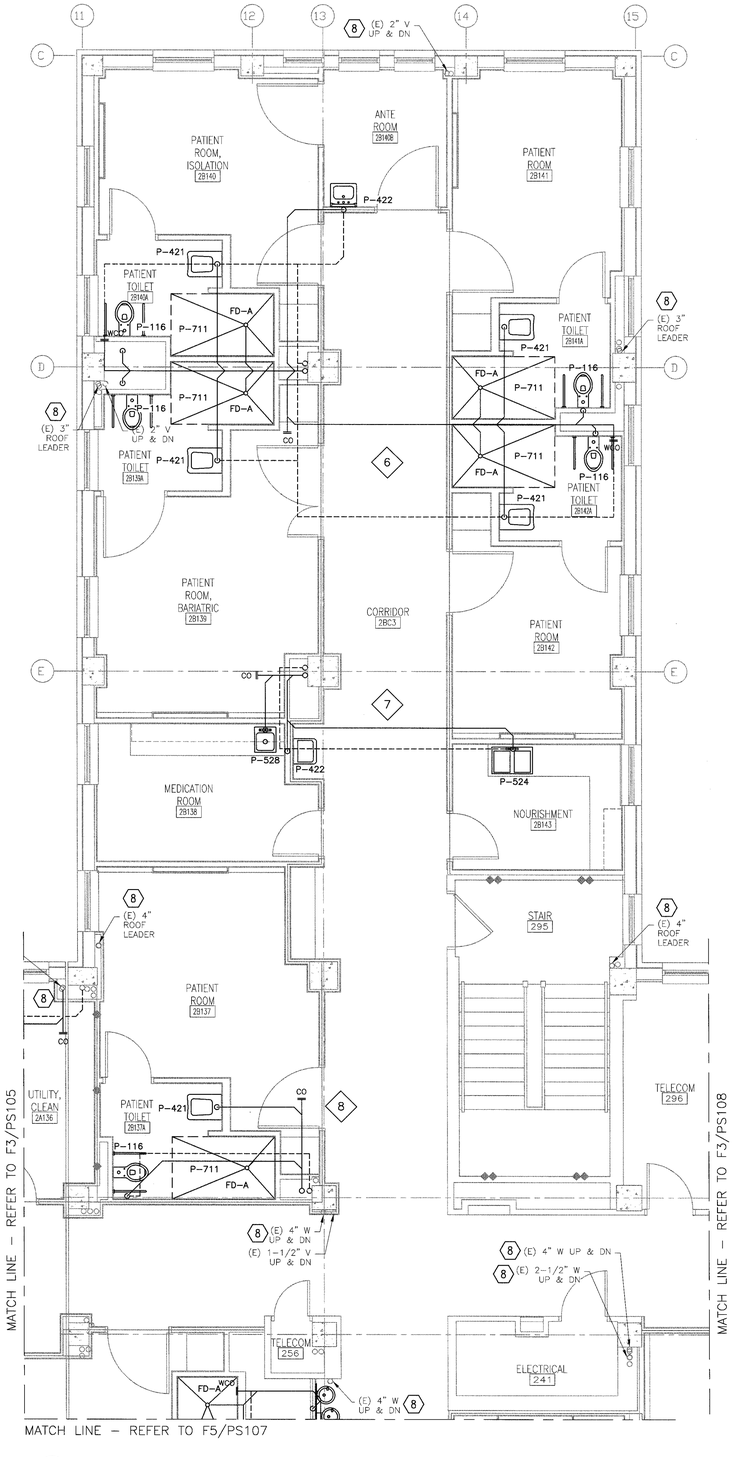

F5 SECOND FLOOR PLAN - WING B
1/4" = 1'-0"

NOTES

A. REFER TO DWG. P-001 FOR LEGEND, ABBREVIATIONS, AND GENERAL NOTES RELATED TO THIS SHEET.

B. ALL EXISTING PIPING, DUCTWORK, SPRINKLERS, CONDUIT, LIGHTING OR OTHER CONSTRUCTION SHALL BE RELOCATED AS REQUIRED FOR ALL DEMOLITION AND INSTALLATION WORK.

C. REFER TO PD106 FOR WASTE/VENT DEMOLITION ON THE SECOND FLOOR.

D. REFER TO PP106 FOR NEW PLUMBING WORK ON THE SECOND FLOOR.

E. THE CONTRACTOR SHALL LOCATE ALL NEW CONCRETE PENETRATIONS SUCH THAT THE PENETRATION DOES NOT OCCUR IN A CONCRETE BEAM OR PAN RIB.

F. THE PLUMBING CONTRACTOR SHALL REFERENCE DRAWINGS GI102 TO GI110 FOR PHASING REQUIREMENTS OF PROJECT. PHASING SHALL BE INCLUDED IN BASE BID.

KEY NOTES ⬡

1. NEW 4" WASTE BELOW FLOOR DOWN TO CRAWLSPACE.
2. NEW 3" VENT ABOVE FLOOR TO ROOF.
3. BEAM CONDITION THIS LOCATION (COORDINATE WITH PENETRATION).
4. NEW 2" WASTE BELOW FLOOR DOWN TO CRAWLSPACE.
5. NEW 1-1/2" VENT ABOVE FLOOR TO ROOF.
6. NEW 3" WASTE BELOW FLOOR DOWN TO CRAWLSPACE.
7. NEW 2" VENT ABOVE FLOOR TO ROOF.
8. EXISTING LINES TO REMAIN.

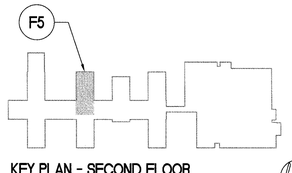

KEY PLAN - SECOND FLOOR
NTS

FULLY SPRINKLERED
BID DOCUMENTS - FOR CONSTRUCTION

Revisions	Date

CONSULTANTS:

STATE OF MICHIGAN — BLAINE CARMEL VAN GANSBEKE — ENGINEER — No. 6201206550 — PROFESSIONAL ENGINEER — 10 Sept 2014

ARCHITECT/ENGINEERS:

PARADIGM ENGINEERS AND CONSTRUCTORS
200 Envoy Circle #201, Louisville KY 40299 – PH: 502.339.8511 – www.paradigmusa.com

Drawing Title: SANITARY AND VENT PLAN SECOND FLOOR WING B

Approved Project Director:

Project Title: RENOVATE 25 BED MEDICAL SURGICAL INPATIENT UNIT

Location: FAYETTEVILLE VAMC, 2300 RAMSEY ST, FAYETTEVILLE, NC 28304

Date: 09-10-2014 | Checked: KLP | Drawn: JDM

Project Number: 565-13-103

Building Number: 1

Drawing Number: PS106

Office of Construction and Facilities Management
Department of Veterans Affairs

VA FORM 08-6231

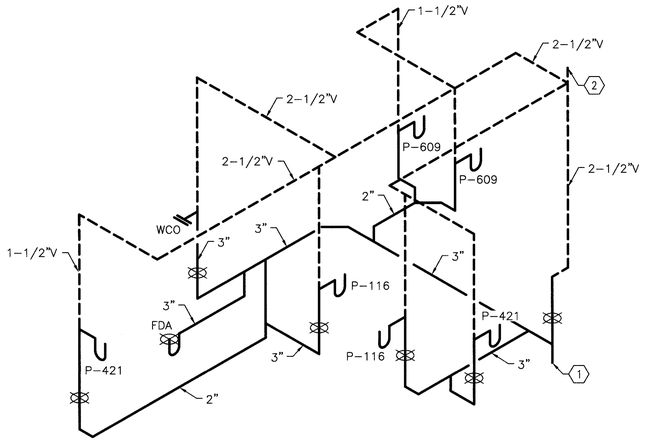

B1 RISER 9 ISOMETRIC (13 dfu)
NOT TO SCALE

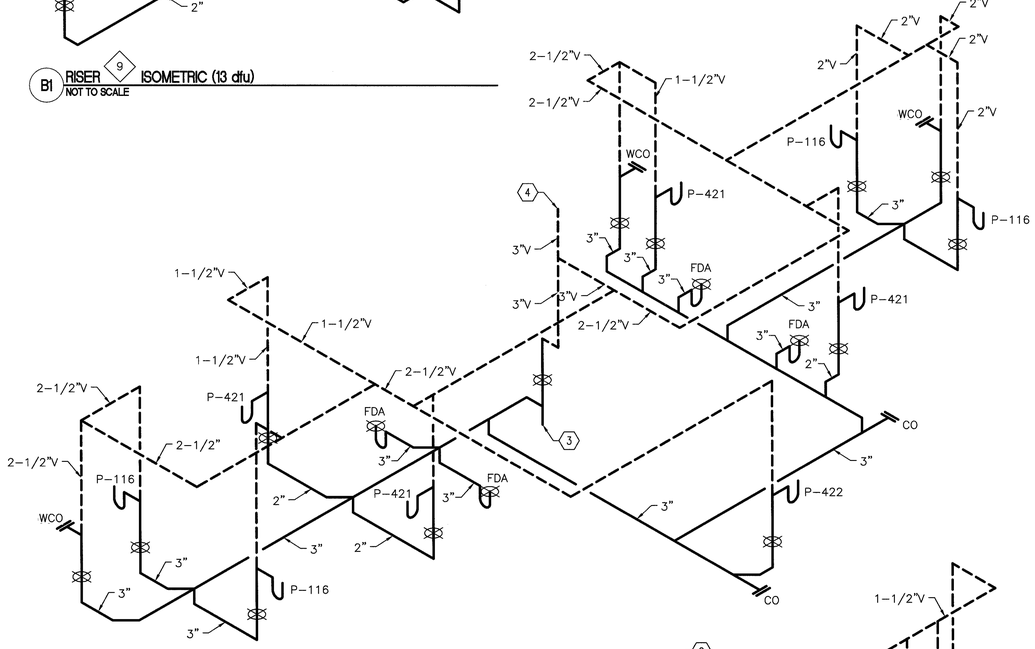

E1 RISER 10 ISOMETRIC (29 dfu)
NOT TO SCALE

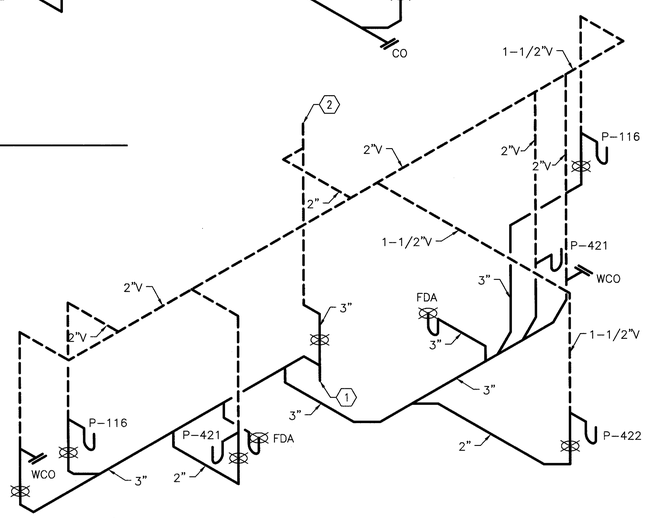

F2 RISER 11 ISOMETRIC (14 dfu)
NOT TO SCALE

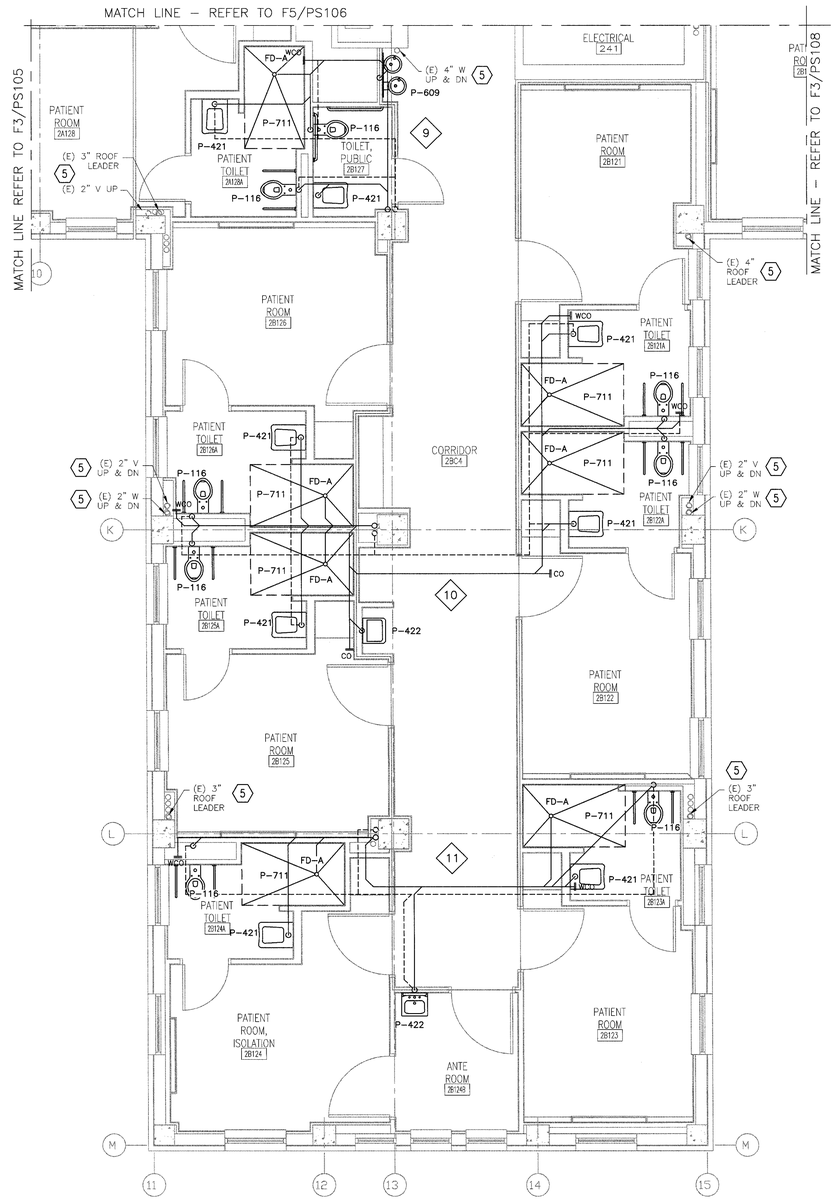

F5 SECOND FLOOR PLAN - WING B
1/4" = 1'-0"

NOTES

A. REFER TO DWG. P-001 FOR LEGEND, ABBREVIATIONS, AND GENERAL NOTES RELATED TO THIS SHEET.

B. ALL EXISTING PIPING, DUCTWORK, SPRINKLERS, CONDUIT, LIGHTING OR OTHER CONSTRUCTION SHALL BE RELOCATED AS REQUIRED FOR ALL DEMOLITION AND INSTALLATION WORK.

C. REFER TO PD107 FOR WASTE/VENT DEMOLITION ON THE SECOND FLOOR.

D. REFER TO PP107 FOR NEW PLUMBING WORK ON THE SECOND FLOOR.

E. THE CONTRACTOR SHALL LOCATE ALL NEW CONCRETE PENETRATIONS SUCH THAT THE PENETRATION DOES NOT OCCUR IN A CONCRETE BEAM OR PAN RIB.

F. THE PLUMBING CONTRACTOR SHALL REFERENCE DRAWINGS GI102 TO GI110 FOR PHASING REQUIREMENTS OF PROJECT. PHASING SHALL BE INCLUDED IN BASE BID.

KEY NOTES

1. NEW 3" WASTE BELOW FLOOR DOWN TO CRAWLSPACE.
2. NEW 2-1/2" VENT ABOVE FLOOR TO ROOF.
3. NEW 4" WASTE BELOW FLOOR DOWN TO CRAWLSPACE.
4. NEW 3" VENT ABOVE FLOOR TO ROOF.
5. EXISTING LINES TO REMAIN.

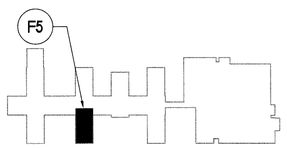

KEY PLAN - SECOND FLOOR
NTS

FULLY SPRINKLERED
BID DOCUMENTS - FOR CONSTRUCTION

Revisions	Date

CONSULTANTS:

STATE OF MICHIGAN
BLAINE CAMIEL VAN GANSBEKE
ENGINEER
No. 6201059550
LICENSED PROFESSIONAL ENGINEER

ARCHITECT/ENGINEERS:

PARADIGM
ENGINEERS AND CONSTRUCTORS
200 Envoy Circle #201, Louisville KY 40299 – PH: 502.339.8511 – www.paradigmusa.com

Drawing Title	SANITARY AND VENT PLAN SECOND FLOOR WING B
Approved Project Director	
Project Title	RENOVATE 25 BED MEDICAL SURGICAL INPATIENT UNIT
Location	FAYETTEVILLE VAMC 2300 RAMSEY ST, FAYETTEVILLE, NC 28304
Date	09-10-2014
Checked	KLP
Drawn	JDM
Project Number	565-13-103
Building Number	1
Drawing Number	PS107

Office of Construction and Facilities Management
Department of Veterans Affairs

VA FORM 08-6231

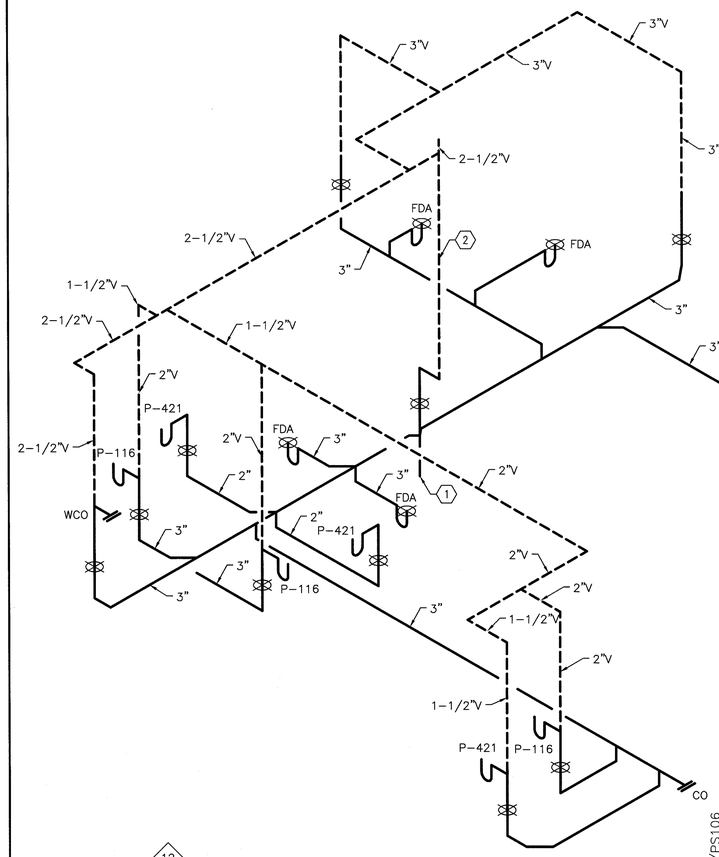

D1 RISER 12 ISOMETRIC (19 dfu)
NOT TO SCALE

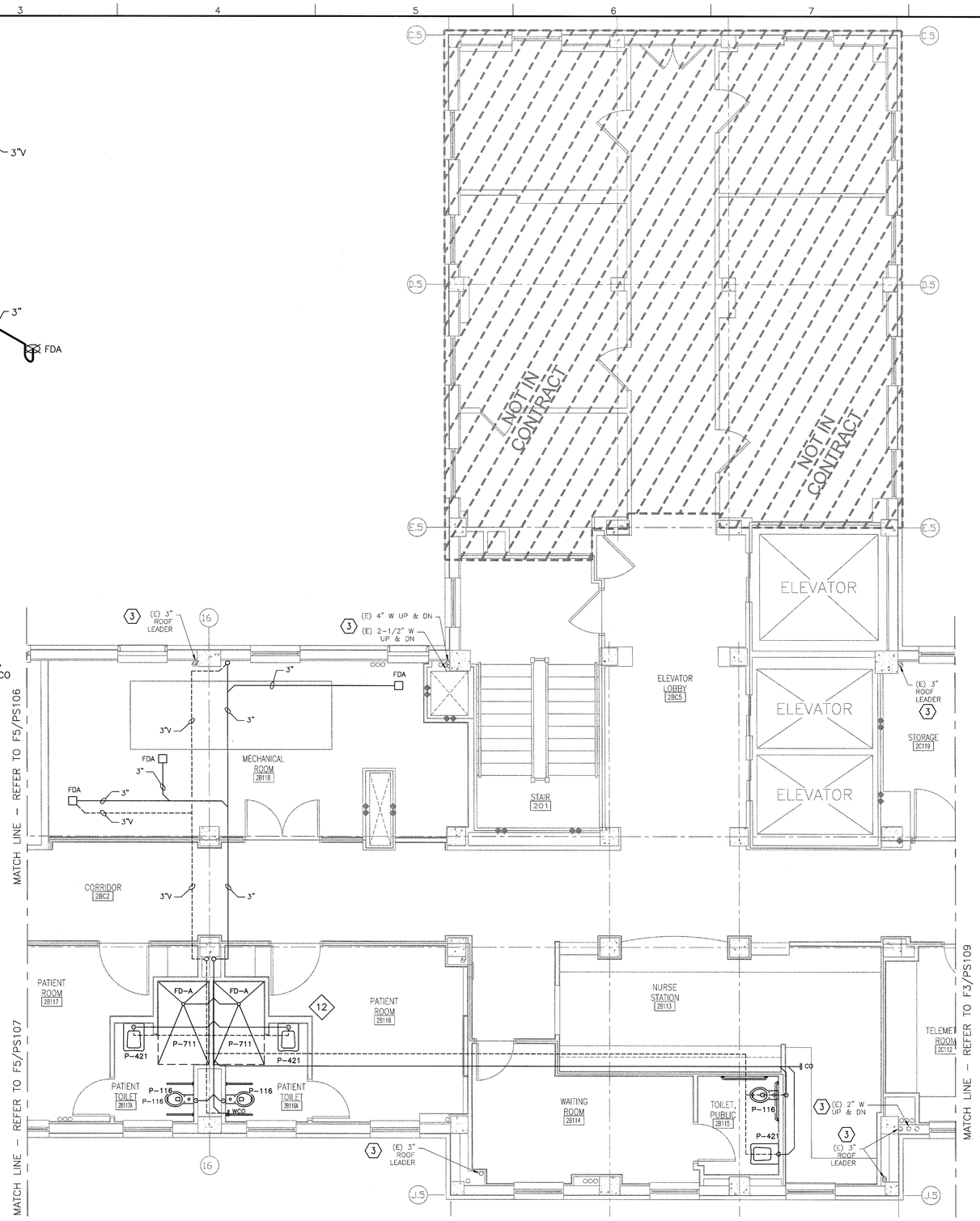

F3 SECOND FLOOR PLAN - WING B
1/4" = 1'-0"

NOTES

A. REFER TO DWG. P-001 FOR LEGEND, ABBREVIATIONS, AND GENERAL NOTES RELATED TO THIS SHEET.

B. ALL EXISTING PIPING, DUCTWORK, SPRINKLERS, CONDUIT, LIGHTING OR OTHER CONSTRUCTION SHALL BE RELOCATED AS REQUIRED FOR ALL DEMOLITION AND INSTALLATION WORK.

C. REFER TO PD108 FOR WASTE/VENT DEMOLITION ON THE SECOND FLOOR.

D. REFER TO PP108 FOR NEW PLUMBING WORK ON THE SECOND FLOOR.

E. THE CONTRACTOR SHALL LOCATE ALL NEW CONCRETE PENETRATIONS SUCH THAT THE PENETRATION DOES NOT OCCUR IN A CONCRETE BEAM OR PAN RIB.

F. THE PLUMBING CONTRACTOR SHALL REFERENCE DRAWINGS GI102 TO GI110 FOR PHASING REQUIREMENTS OF PROJECT. PHASING SHALL BE INCLUDED IN BASE BID.

KEY NOTES

1. NEW 3" WASTE BELOW FLOOR DOWN TO CRAWLSPACE.
2. NEW 2-1/2" VENT ABOVE FLOOR TO ROOF.
3. EXISTING LINES TO REMAIN.

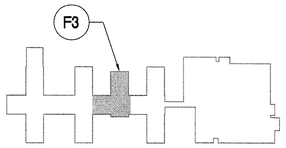

KEY PLAN - SECOND FLOOR
NTS

FULLY SPRINKLERED
BID DOCUMENTS - FOR CONSTRUCTION

Revisions	Date

CONSULTANTS:

STATE OF MICHIGAN — BLAINE CAMIEL VAN GANSHEYK — ENGINEER — No. 6201056550 — LICENSED PROFESSIONAL ENGINEER — 10 Sept 2014

ARCHITECT/ENGINEERS:

PARADIGM ENGINEERS AND CONSTRUCTORS
200 Envoy Circle #201, Louisville KY 40299 – PH: 502.339.8511 – www.paradigmusa.com

Drawing Title	SANITARY AND VENT PLAN SECOND FLOOR WING B
Approved Project Director	
Project Title	RENOVATE 25 BED MEDICAL SURGICAL INPATIENT UNIT
Location	FAYETTEVILLE VAMC, 2300 RAMSEY ST., FAYETTEVILLE, NC 28304
Date	09-10-2014
Checked	KLP
Drawn	JDM
Project Number	565-13-103
Building Number	1
Drawing Number	PS108

Office of Construction and Facilities Management
Department of Veterans Affairs

VA FORM 08-6231

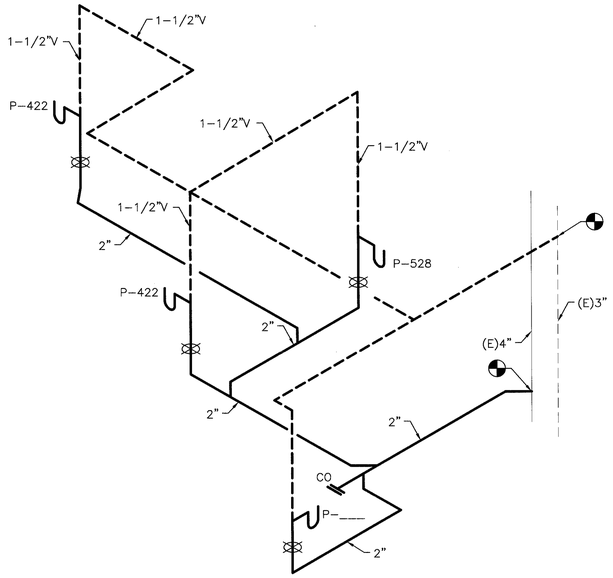

C3 RISER 13 ISOMETRIC (5 dfu)
NOT TO SCALE

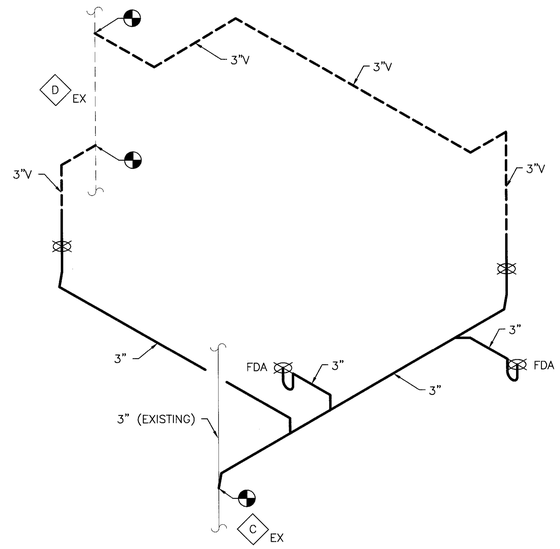

C6 RISER C EX D EX ISOMETRIC
NOT TO SCALE

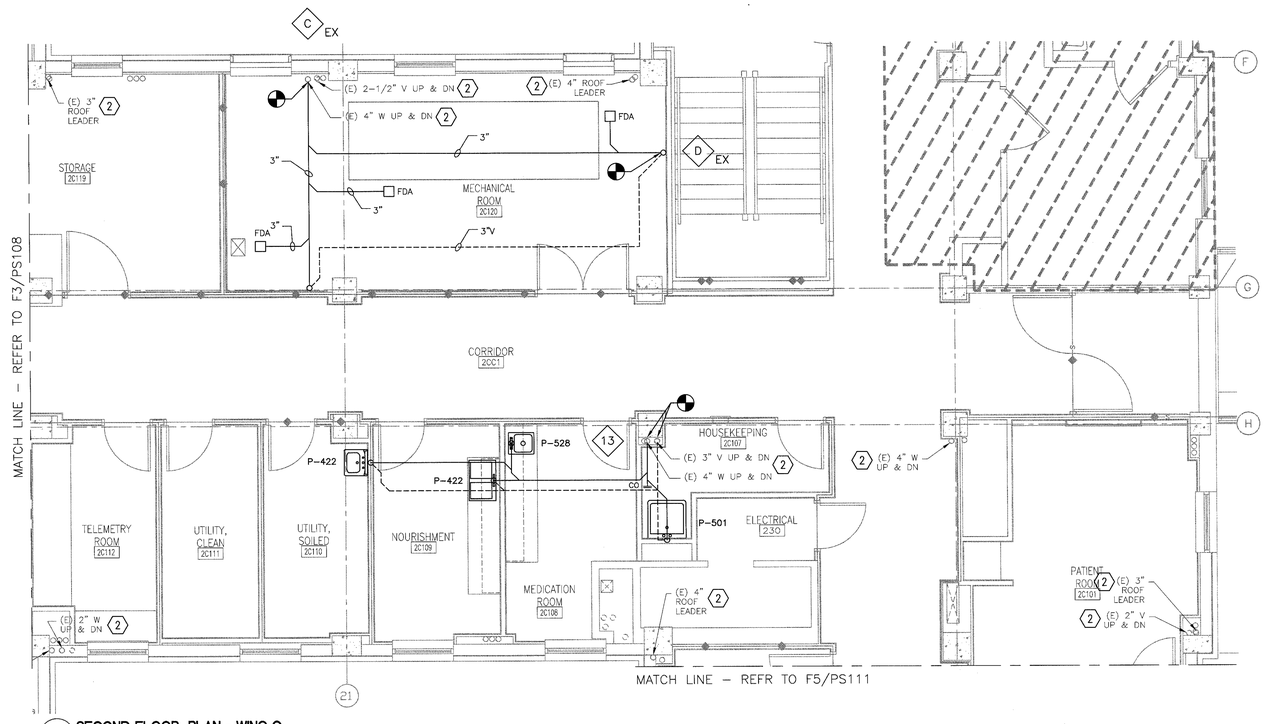

F3 SECOND FLOOR PLAN - WING C
1/4" = 1'-0"

NOTES

A. REFER TO DWG. P-001 FOR LEGEND, ABBREVIATIONS, AND GENERAL NOTES RELATED TO THIS SHEET.

B. ALL EXISTING PIPING, DUCTWORK, SPRINKLERS, CONDUIT, LIGHTING OR OTHER CONSTRUCTION SHALL BE RELOCATED AS REQUIRED FOR ALL DEMOLITION AND INSTALLATION WORK.

C. REFER TO PD109 FOR WASTE/VENT DEMOLITION ON THE SECOND FLOOR.

D. REFER TO PP109 FOR NEW PLUMBING WORK ON THE SECOND FLOOR.

E. THE CONTRACTOR SHALL LOCATE ALL NEW CONCRETE PENETRATIONS SUCH THAT THE PENETRATION DOES NOT OCCUR IN A CONCRETE BEAM OR PAN RIB.

F. THE PLUMBING CONTRACTOR SHALL REFERENCE DRAWINGS GI102 TO GI110 FOR PHASING REQUIREMENTS OF PROJECT. PHASING SHALL BE INCLUDED IN BASE BID.

KEY NOTES

1. TIE INTO EXISTING WASTE AND VENT IN THIS LOCATION.
2. EXISTING LINES TO REMAIN.

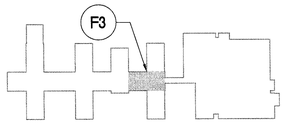

KEY PLAN - SECOND FLOOR
NTS

FULLY SPRINKLERED
BID DOCUMENTS - FOR CONSTRUCTION

Revisions	Date

CONSULTANTS:

STATE OF MICHIGAN
BLAINE CAMIEL VAN GANSBEKE
ENGINEER
No. 6201056560
LICENSED PROFESSIONAL ENGINEER
10 Oct 2014

ARCHITECT/ENGINEERS:

PARADIGM
ENGINEERS AND CONSTRUCTORS
200 Envoy Circle #201, Louisville KY 40299 - PH: 502.339.8511 - www.paradigmusa.com

Drawing Title: SANITARY AND VENT PLAN SECOND FLOOR WING C	Project Title: RENOVATE 25 BED MEDICAL SURGICAL INPATIENT UNIT	Project Number: 565-13-103	Office of Construction and Facilities Management
Approved Project Director	Location: FAYETTEVILLE VAMC, 2300 RAMSEY ST, FAYETTEVILLE, NC 28304	Building Number: 1	
	Date: 09-10-2014 / Checked: KLP / Drawn: JDM	Drawing Number: PS109	Department of Veterans Affairs

VA FORM 08-6231

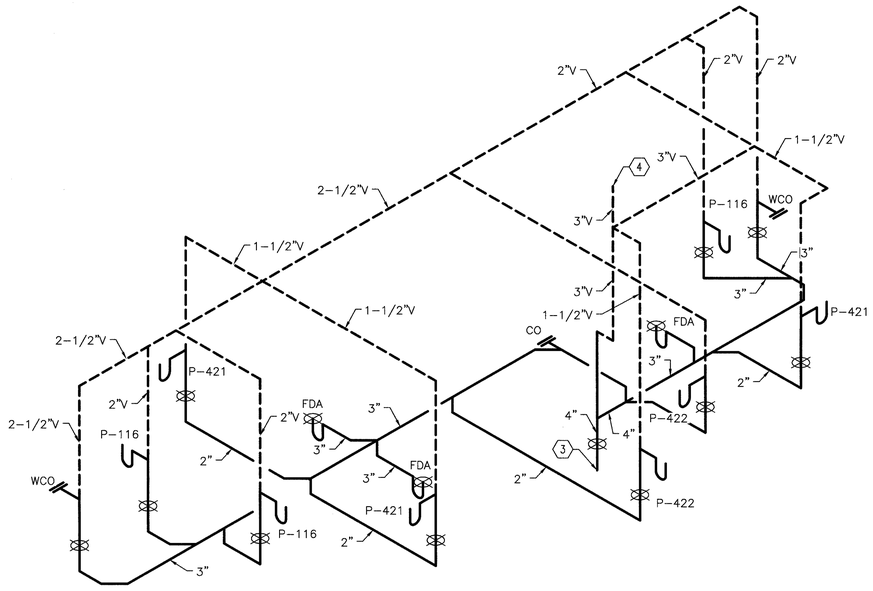

C1 RISER 15 ISOMETRIC (22 dfu)
NOT TO SCALE

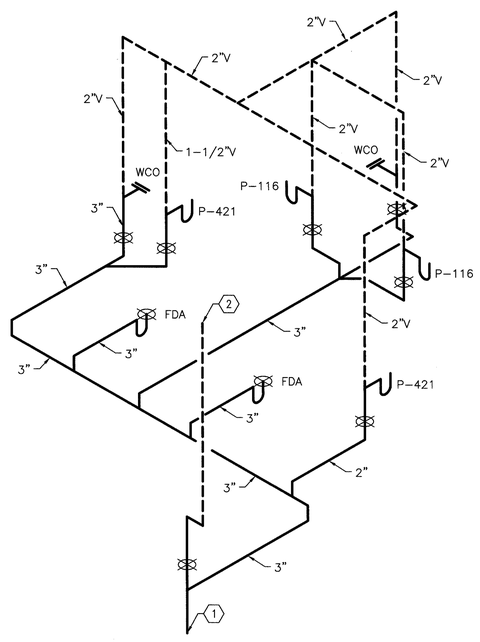

F1 RISER 14 ISOMETRIC (14 dfu)
NOT TO SCALE

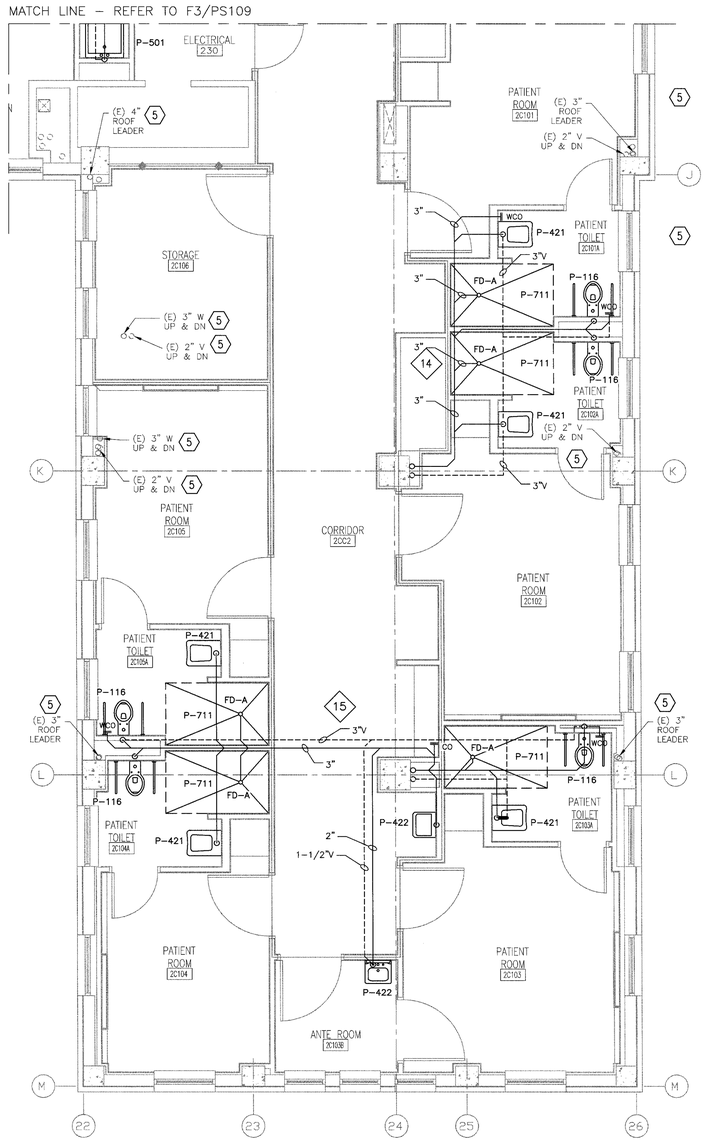

F5 SECOND FLOOR PLAN - WING C
1/4" = 1'-0"

NOTES

A. REFER TO DWG. P-001 FOR LEGEND, ABBREVIATIONS, AND GENERAL NOTES RELATED TO THIS SHEET.

B. ALL EXISTING PIPING, DUCTWORK, SPRINKLERS, CONDUIT, LIGHTING OR OTHER CONSTRUCTION SHALL BE RELOCATED AS REQUIRED FOR ALL DEMOLITION AND INSTALLATION WORK.

C. REFER TO PD111 FOR WASTE/VENT DEMOLITION ON THE SECOND FLOOR.

D. REFER TO PP111 FOR NEW PLUMBING WORK ON THE SECOND FLOOR.

E. THE CONTRACTOR SHALL LOCATE ALL NEW CONCRETE PENETRATIONS SUCH THAT THE PENETRATION DOES NOT OCCUR IN A CONCRETE BEAM OR PAN RIB.

F. THE PLUMBING CONTRACTOR SHALL REFERENCE DRAWINGS GI102 TO GI110 FOR PHASING REQUIREMENTS OF PROJECT. PHASING SHALL BE INCLUDED IN BASE BID.

KEY NOTES

1. NEW 3" WASTE BELOW FLOOR DOWN TO CRAWLSPACE.
2. NEW 2" VENT ABOVE FLOOR TO ROOF.
3. NEW 4" WASTE BELOW FLOOR DOWN TO CRAWLSPACE.
4. NEW 3" VENT ABOVE FLOOR TO ROOF.
5. EXISTING LINES TO REMAIN.

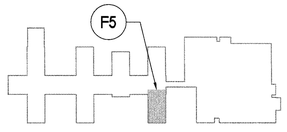

KEY PLAN - SECOND FLOOR
NTS

FULLY SPRINKLERED
BID DOCUMENTS - FOR CONSTRUCTION

Revisions	Date

CONSULTANTS:

STATE OF MICHIGAN
BLAINE CAMIEL VAN GANSBEKE
ENGINEER
No. 62010566
LICENSED PROFESSIONAL ENGINEER
10-6-2014

ARCHITECT/ENGINEERS:

PARADIGM
ENGINEERS AND CONSTRUCTORS
200 Envoy Circle #201, Louisville KY 40299 – PH: 502.339.8511 – www.paradigmusa.com

Drawing Title	SANITARY AND VENT PLAN SECOND FLOOR WING C
Approved Project Director	
Project Title	RENOVATE 25 BED MEDICAL SURGICAL INPATIENT UNIT
Location	FAYETTEVILLE VAMC, 2300 RAMSEY ST, FAYETTEVILLE, NC 28304
Date	09-10-2014
Checked	KLP
Drawn	JDM
Project Number	565-13-103
Building Number	1
Drawing Number	PS111

Office of Construction and Facilities Management
Department of Veterans Affairs

VA FORM 08-6231