FULLY SPRINKLERED

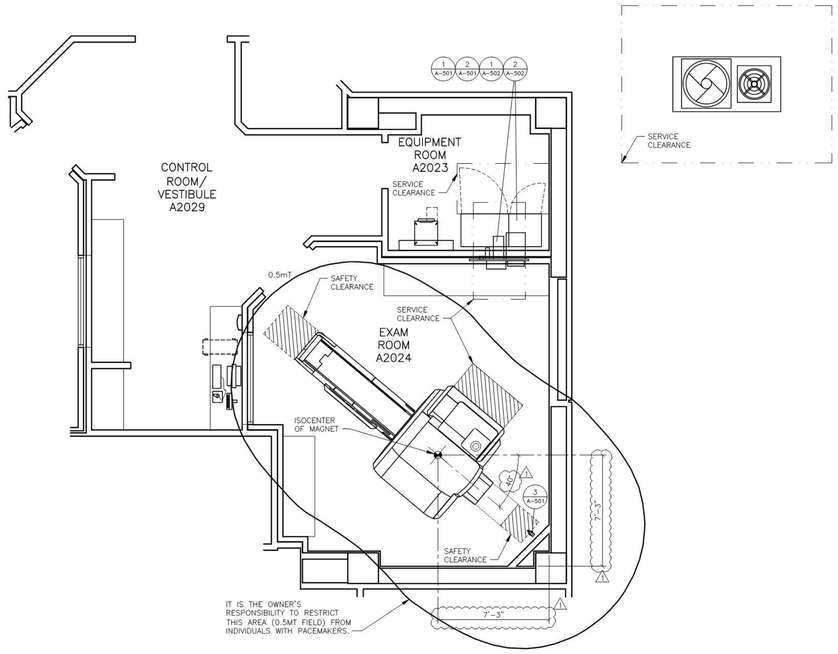

SAFETY/SERVICE CLEARANCE PLAN

SCALE: 1/4" = 1'-0"

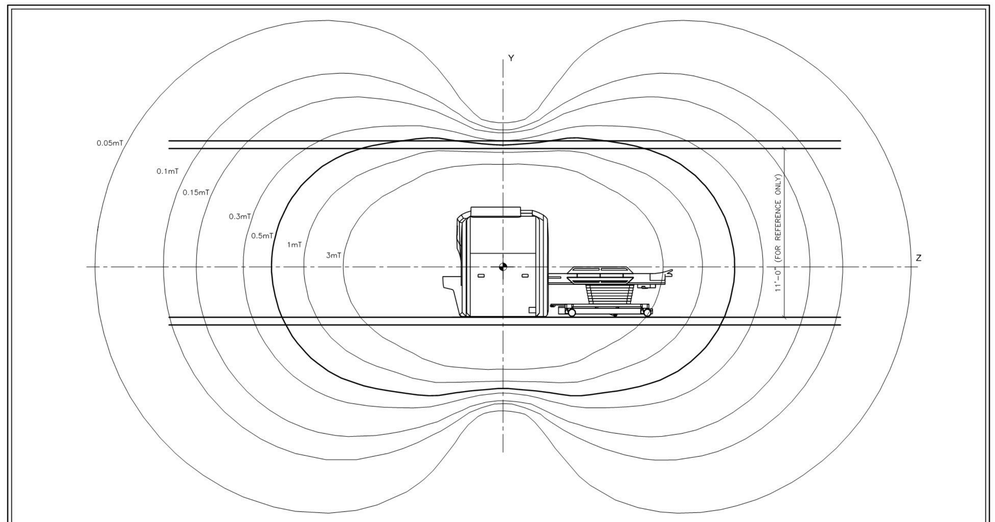

SKYRA SIDE ELEVATION — SCALE: 1/4"=1'-0"

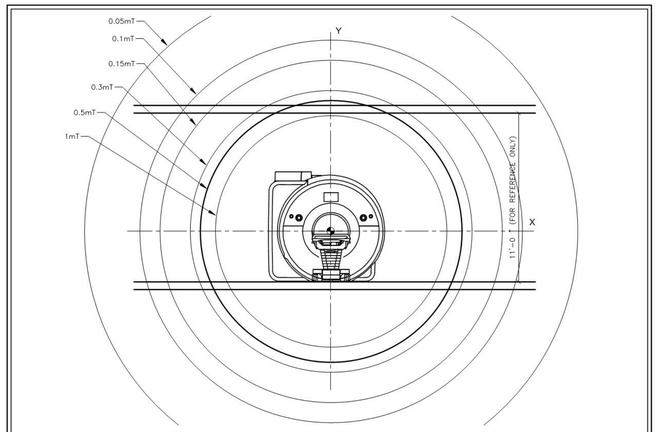

SKYRA FRONT ELEVATION — SCALE: 1/4"=1'-0"

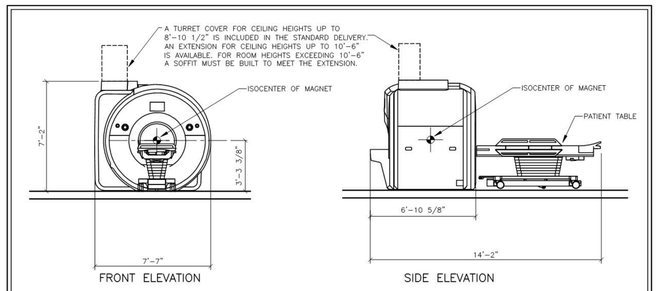

SKYRA MAGNET — SCALE: NONE

SKYRA REV 9

ATTENTION:

- THIS DRAWING IS DESIGNED TO CONFORM TO FEATURES AND EQUIPMENT REQUIREMENTS PRESENTED AT THE TIME OF THEIR PREPARATION. SINCE BOTH THESE FACTORS ARE SUBJECT TO DESIGN MODIFICATION, THEY ARE NOT TO BE USED FOR CONSTRUCTION PURPOSES.
- THIS SET OF PLANS REPRESENTS A COMPLETE SET OF DETAILS AND SHOULD NOT BE SEPARATED.
- IT IS RECOMMENDED THAT THE SIEMENS DRAWINGS BE INCORPORATED WITH THE CONSTRUCTION DOCUMENTS FOR REFERENCE.
- ALL DIMENSIONS SHOWN ON THIS DRAWING ARE FROM FINISHED SURFACES.
- THIS DRAWING DOES NOT PROVIDE RADIATION SHIELDING REQUIREMENTS FOR X-RAY AND ASSOCIATED EQUIPMENT. THE CUSTOMER IS RESPONSIBLE FOR CONSULTING WITH A REGISTERED RADIATION PHYSICIST TO SPECIFY RADIATION PROTECTION.

SYM	DATE	DESCRIPTION
1	11/03/15	CHANGED ISO CENTER LOCATION PER CUSTOMER
2	10/22/15	R101R(B) DATED 09/29/15 APPROVED BY CUSTOMER FOR FINALS

—ISSUE BLOCK—

PROJECT MANAGER: TRENT CHILDRESS
TEL: (317) 341-1094 EXT:
VMAIL:
FAX:
EMAIL: trent.childress@siemens.com

SIEMENS

CINCINNATI VAMC
3200 VINE STREET, CINCINNATI, OH 45220
MRI SUITE 2024 – MAGNETOM SKYRA W/MOBILE TABLE

THE USE OR REPRODUCTION OF THIS TITLE BLOCK WITHOUT SIEMENS AUTHORIZATION WILL RESULT IN PROSECUTION UNDER FULL EXTENT OF THE LAW.
ALL RIGHTS ARE RESERVED.

PROJECT #: 1400888
SHEET 2 OF 10
DRAWN BY: R. SUTHERS
SCALE: AS NOTED
REF. #: 30182993
DATE: 11/03/15
SHEET: A-102

REFERENCE DOCUMENT - NOT FOR CONSTRUCTION

Revisions	Date

CONSULTANTS:

STATE OF OHIO — JEFFREY A. EVANS 9410768 — REGISTERED ARCHITECT

ARCHITECT/ENGINEERS:

pfb architects Cincinnati • Chicago
PFB Architects,Inc.
9451 Kenwood Road
Cincinnati, Ohio 45242
(513) 861 3200

Heapy Engineering
MEP Design Technology Planning Commissioning Energy
Nationally Recognized Leader in Sustainability
Heapy Engineering
1400 West Dorothy Lane
Dayton OH 45409
(937) 224 0861

Drawing Title: VENDOR EQUIPMENT (FOR REFERENCE ONLY)

Approved: Project Director

Project Title: Building 01-Imaging Center

Location: Cincinnati, Ohio

Date: 10/30/2015 | Checked: PFB | Drawn: PFB

Project No.: VA Project No. 539-CSI-201; PFB Project No. 3585.00

Building Number: 01- Imaging Center

Drawing Number: QH-002

Dwg. of

Office of Construction and Facilities Management

Department of Veterans Affairs