REVISIONS				
LET	DESCRIPTION	PREP'D BY	DATE	APPROVED
REV. A	AS-BUILT DRWG. NO CORRECTIONS	GREG	4OCT82	MURDOCK

PLAN, BRICK SCREEN WALLS (ADDITIVE BID ITEM)

SCALE 1/8" = 1'-0"

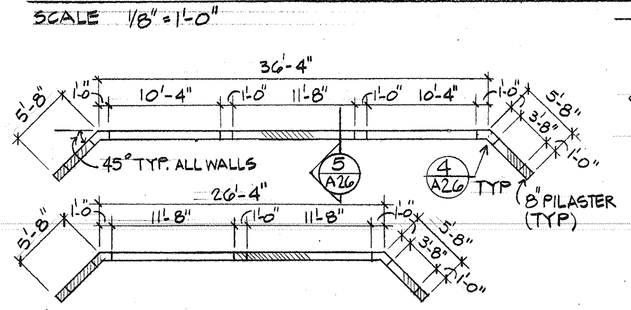

WALLS @ AREA "A"

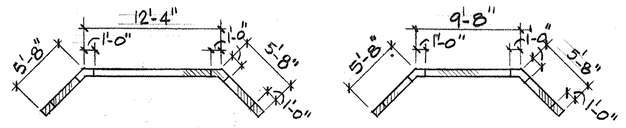

WALL @ AREA "B" WALL @ AREA "E"

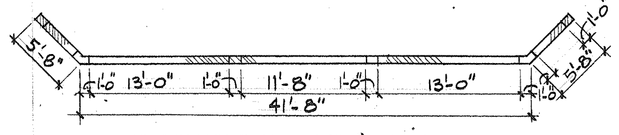

WALL @ AREA "E"

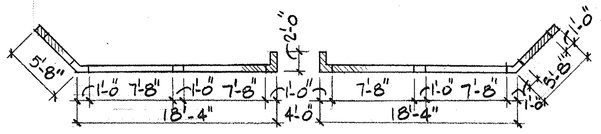

WALLS @ AREA "F"

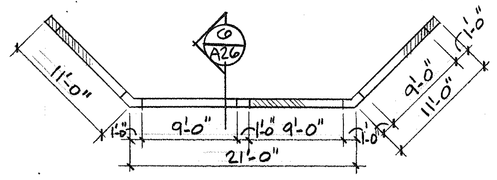

WALL @ DINING TERRACE AREA "G"

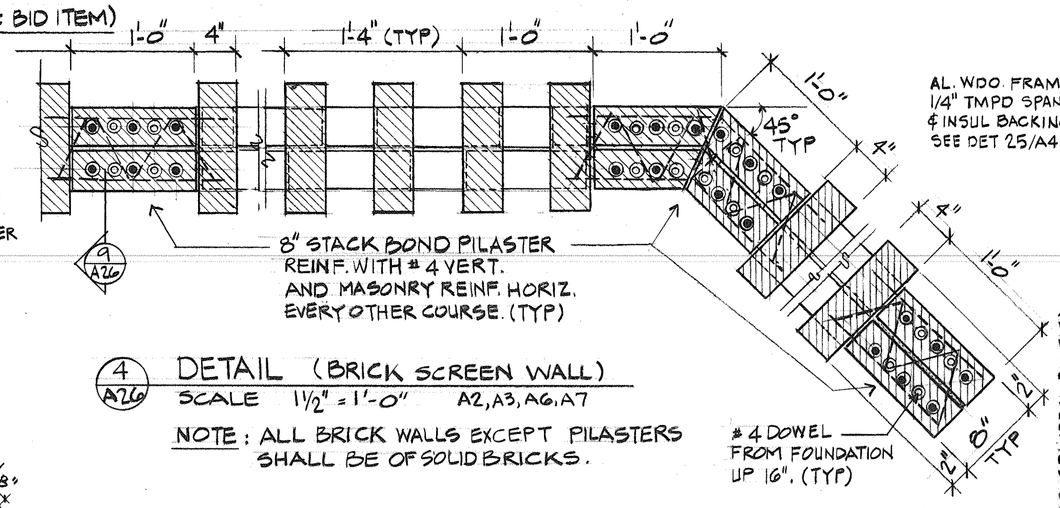

4/A26 DETAIL (BRICK SCREEN WALL)

SCALE 1 1/2" = 1'-0" A2, A3, A6, A7

NOTE: ALL BRICK WALLS EXCEPT PILASTERS SHALL BE OF SOLID BRICKS.

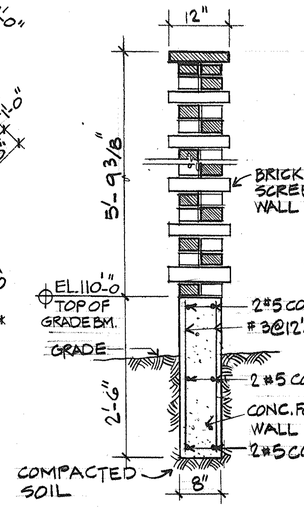

5/A26 SECTION

SCALE 3/4" = 1'-0" A20

TYP. AT BRICK SCREEN WALLS EXCEPT WALL AT DINING TERRACE AREA "G"

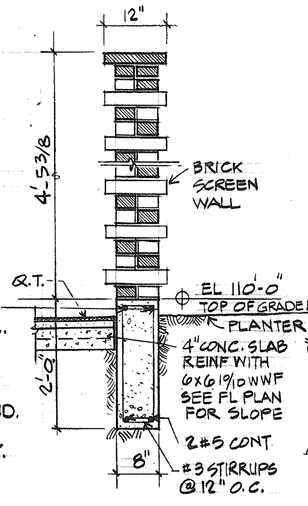

6/A26 SECTION

SCALE 3/4" = 1'-0" A7, A20

WALL @ DINING TERRACE AREA "G"

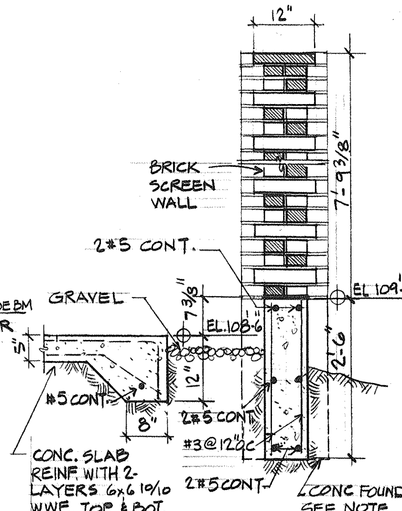

7/A26 SECTION

SCALE 3/4" = 1'-0" A19, A3

WALL @ TRANSFORMER ENCLOSURE

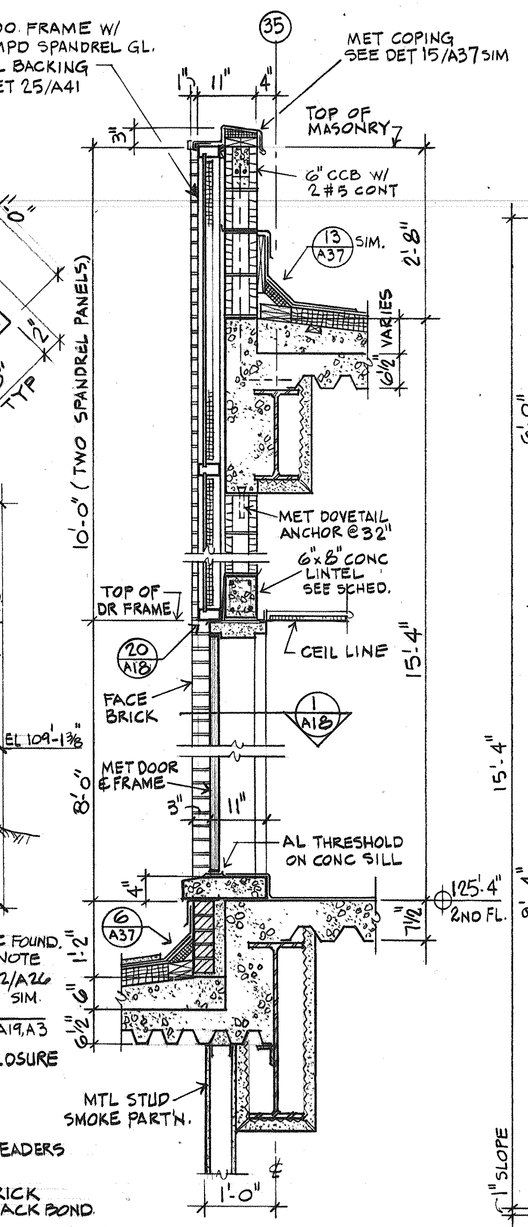

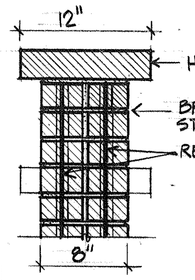

9/A26 SECTION

SCALE 1 1/2" = 1'-0" A26

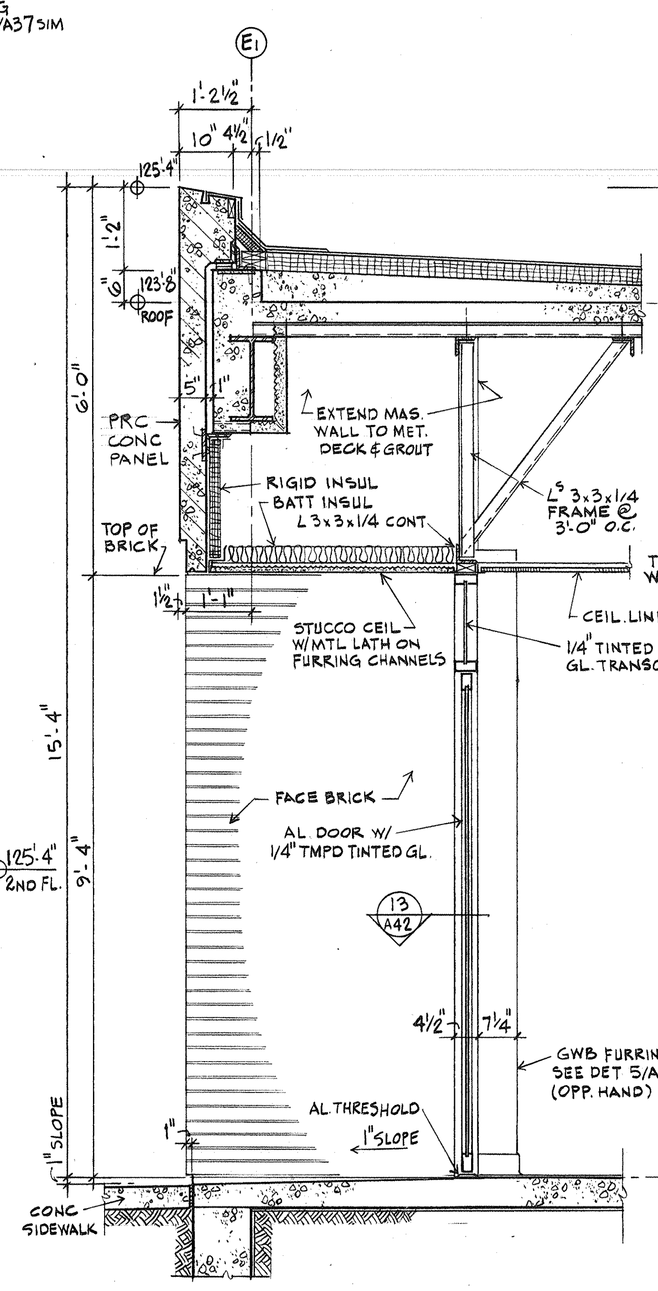

3/A26 SECTION

SCALE: 3/4" = 1'-0" A8, A9, A10, A19

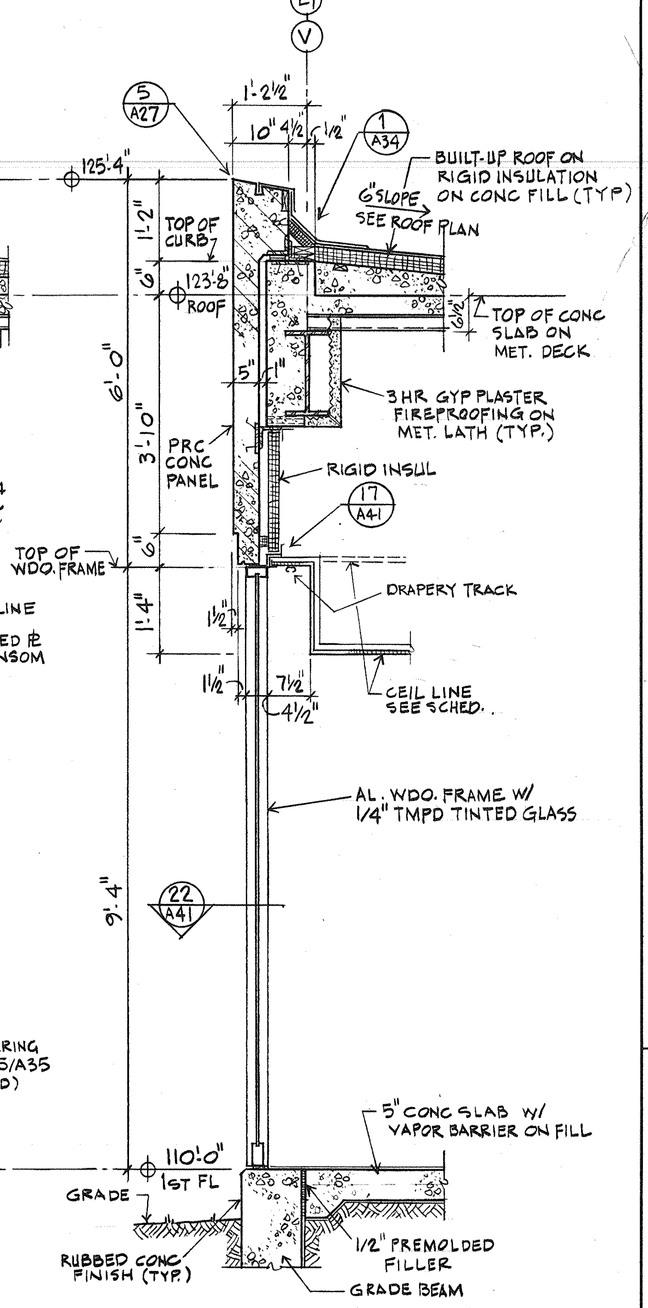

2/A26 SECTION

SCALE: 3/4" = 1'-0" A3, A8, A9, A19

1/A26 SECTION

SCALE 3/4" = 1'-0" A8, A9, A19, A20

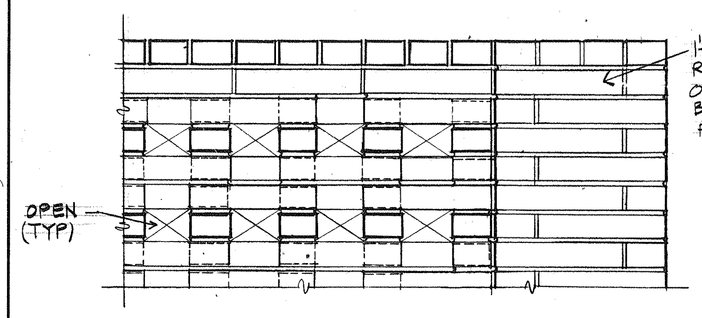

8/A26 DETAIL ELEVATION

SCALE 1 1/2" = 1'-0" A26

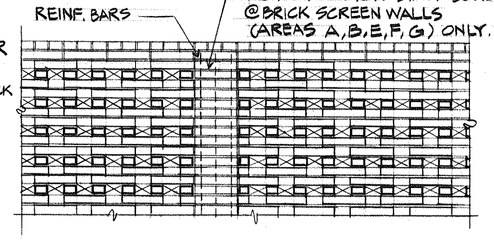

PARTIAL ELEVATION

N.T.S. A26

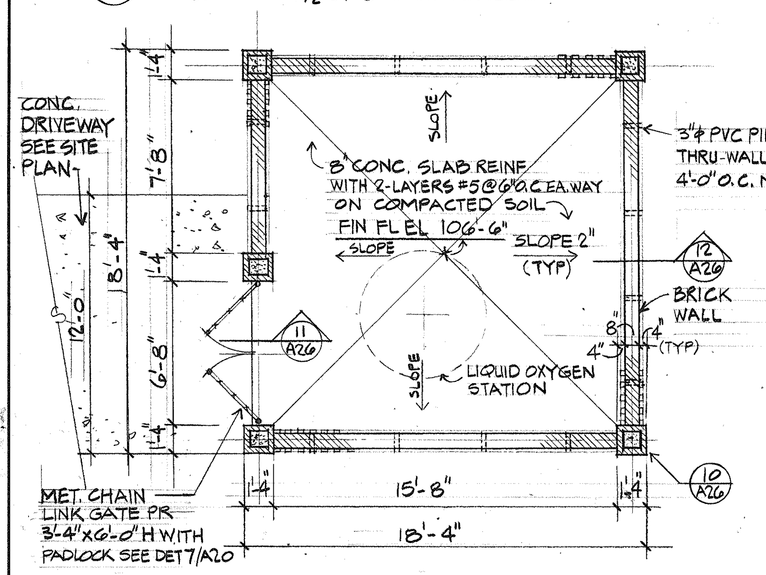

PLAN OF LIQUID OXYGEN PARK

SCALE 1/4" = 1'-0"

(BASE BID)

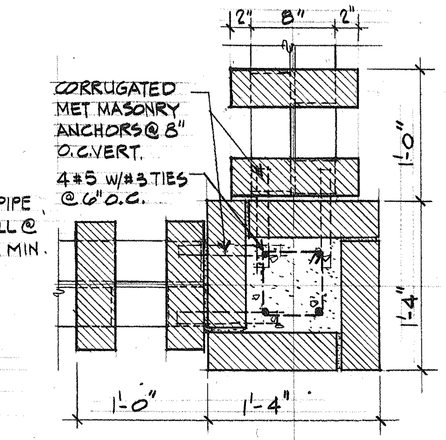

10/A26 PILASTER DETAIL

SCALE 1 1/2" = 1'-0" A26

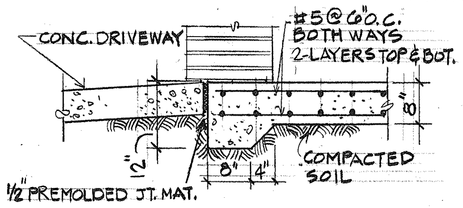

11/A26 SECTION

SCALE 3/4" = 1'-0" A26

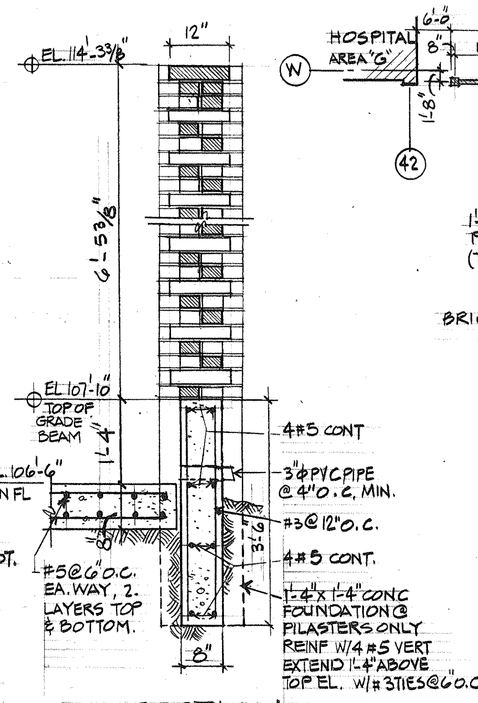

12/A26 SECTION

SCALE 3/4" = 1'-0" A26

WALL AT LIQUID OXYGEN PARK

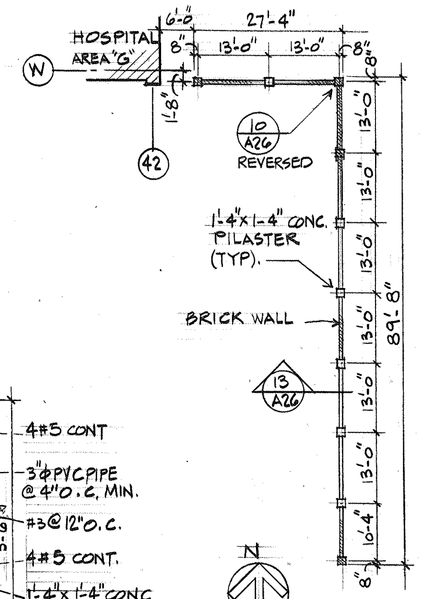

PLAN

N.T.S.

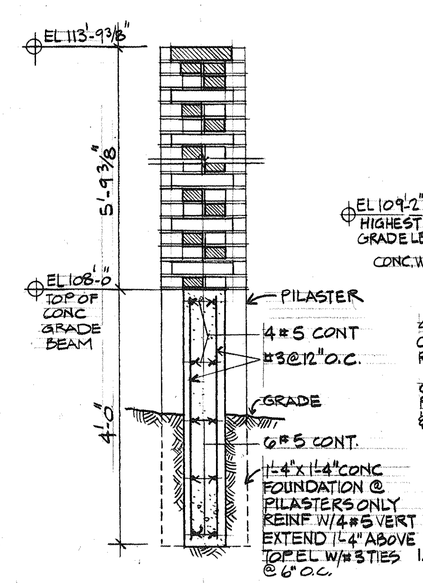

13/A26 SECTION

SCALE 3/4" = 1'-0" A26

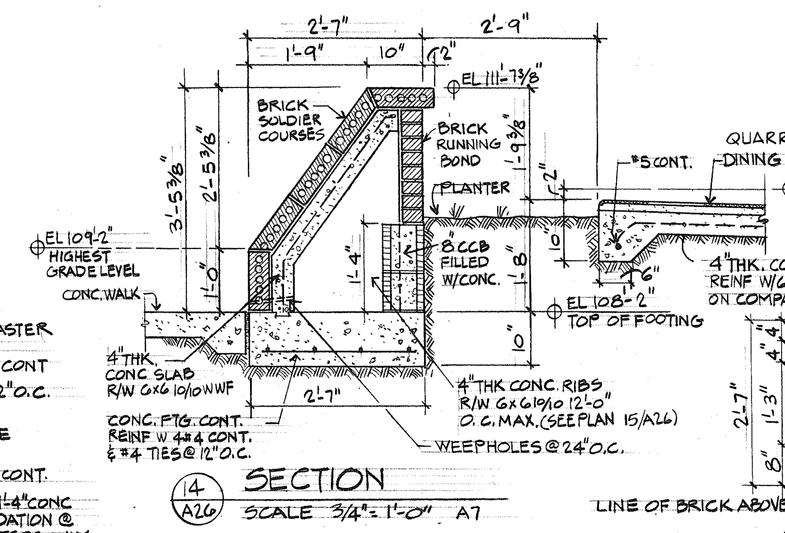

14/A26 SECTION

SCALE 3/4" = 1'-0" A7

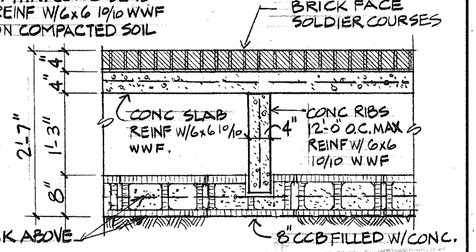

15/A26 PLAN

SCALE 3/4" = 1'-0" A26

RECORD DRAWING DATE 11-1-82

GRAPHIC SCALES

1/8" = 1'-0" 4' 0 5' 10' 15' 20'

1/4" = 1'-0" 12" 0 1' 2' 3' 4' 5' 6' 7' 8' 9' 10' 11'

3/4" = 1'-0" 12" 0 1' 2' 3'

1 1/2" = 1'-0" 12" 0 1'

BRICK SCREEN WALL (@ SOUTH OF LOADING DOCK #2) (BASE BID) SEE NAVFAC DWG No. 5046628 A8, A20 FOR CONTINUATION OF BRICK WALL ADDITIVE BID ITEM.

ROGERS, LOVELOCK, FRITZ, ROGERS & BUTLER
LOPATKA, McQUAIG & WALL CORPORATION
ARCHITECTS - ENGINEERS - PLANNERS
WINTER PARK, FLORIDA 32789

DEPARTMENT OF THE NAVY — NAVAL FACILITIES ENGINEERING COMMAND
SOUTHERN DIVISION
CHARLESTON, S. C.

NAVAL REGIONAL MEDICAL CENTER — ORLANDO, FLORIDA

HOSPITAL REPLACEMENT

WALL SECTIONS - SHEET 5 OF 5

DSGN JAMMAL DR JAMMAL CHKM MURDOCK
SUPV MURDOCK CH ENGR MARTEN
SUBMITTED BY DATE
FIRM MEMBER (TITLE) PARTNER
SOUTHERN DIV - DESIGN DIVISION
PDE DIR

APPROVED DATE
OFFICER IN CHARGE
APPROVED DATE
EFD FOR COMMANDER, NAVFAC

A26

SIZE F | CODE IDENT NO. 80091 | NAVFAC DRAWING NO. 5046707
SCALE AS SHOWN | CONSTR CONTR NO. N62467-75-C-0340
SPEC 06-75-0340 | SHEET 116 OF

K&E 19 1183 10-75 W3286* END-SOUTH DIV-4-11012-15 CAROLINA E&F P452