REVISIONS				
LET	DESCRIPTION	PREP'D BY	DATE	APPROVED
REV. A	AS-BUILT DRWG. NO CORRECTIONS	GREG	4 OCT 82	MURDOCK

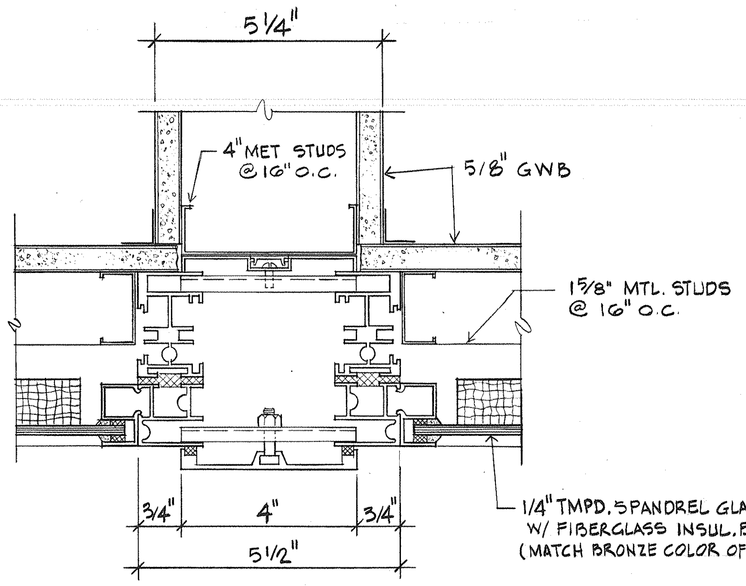

6/A39 MULLION
SCALE: 6" = 1'-0" A39

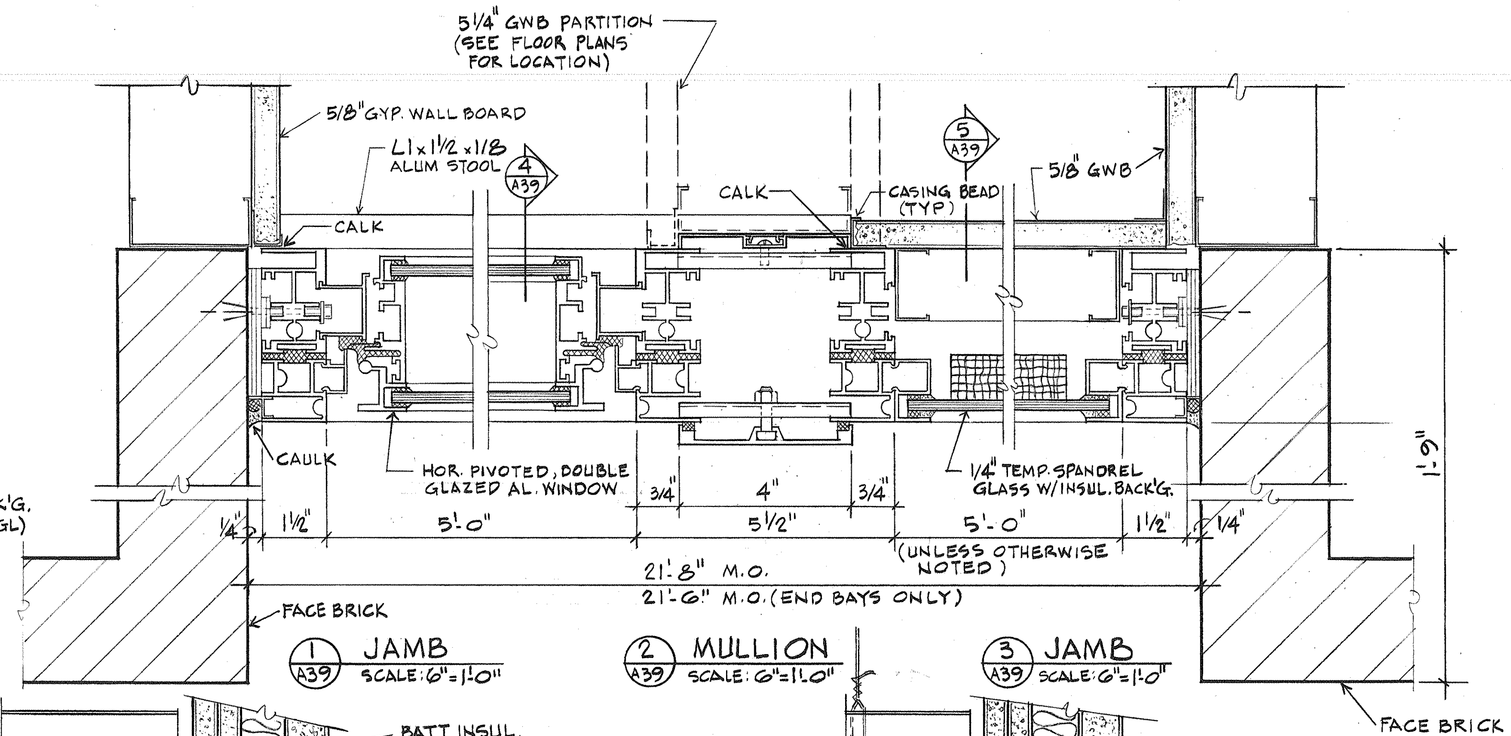

1/A39 JAMB
SCALE: 6" = 1'-0"

2/A39 MULLION
SCALE: 6" = 1'-0"

3/A39 JAMB
SCALE: 6" = 1'-0"

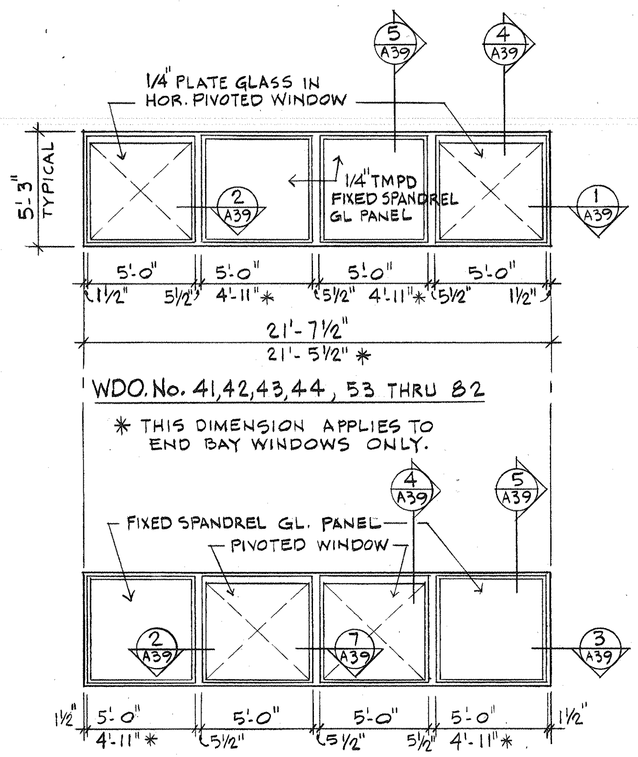

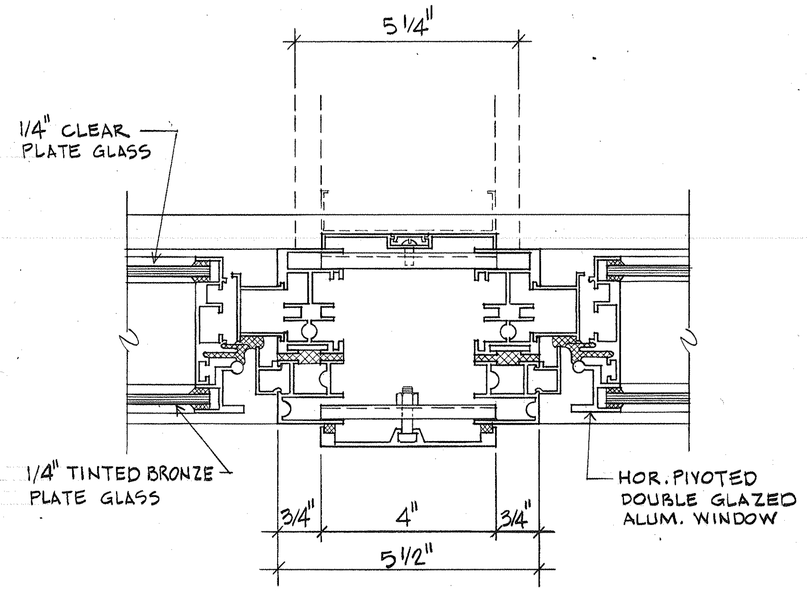

7/A39 MULLION
SCALE: 6" = 1'-0" A39

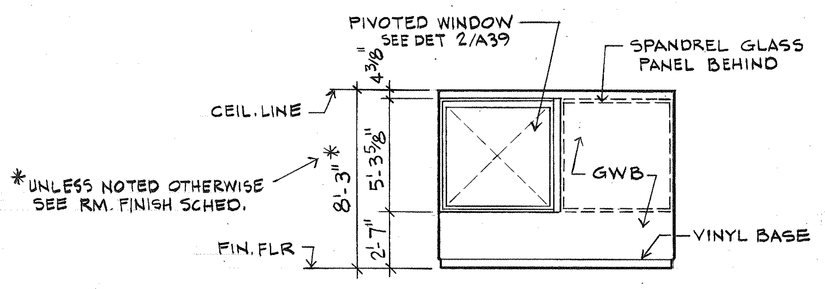

8/A39 BEDRM. WINDOW ELEVATION
SCALE: 1/4" = 1'-0"

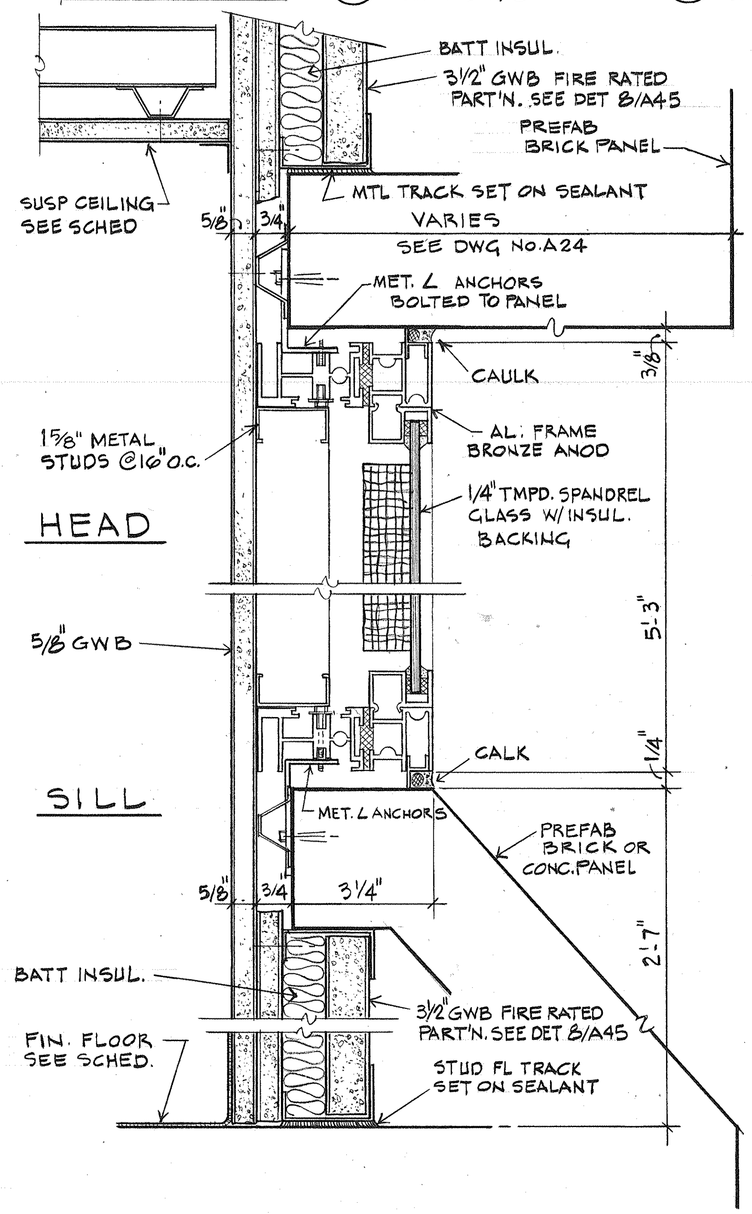

5/A39 SECTION (THRU FIXED SPANDREL GLASS PANEL)
SCALE: 6" = 1'-0" A39

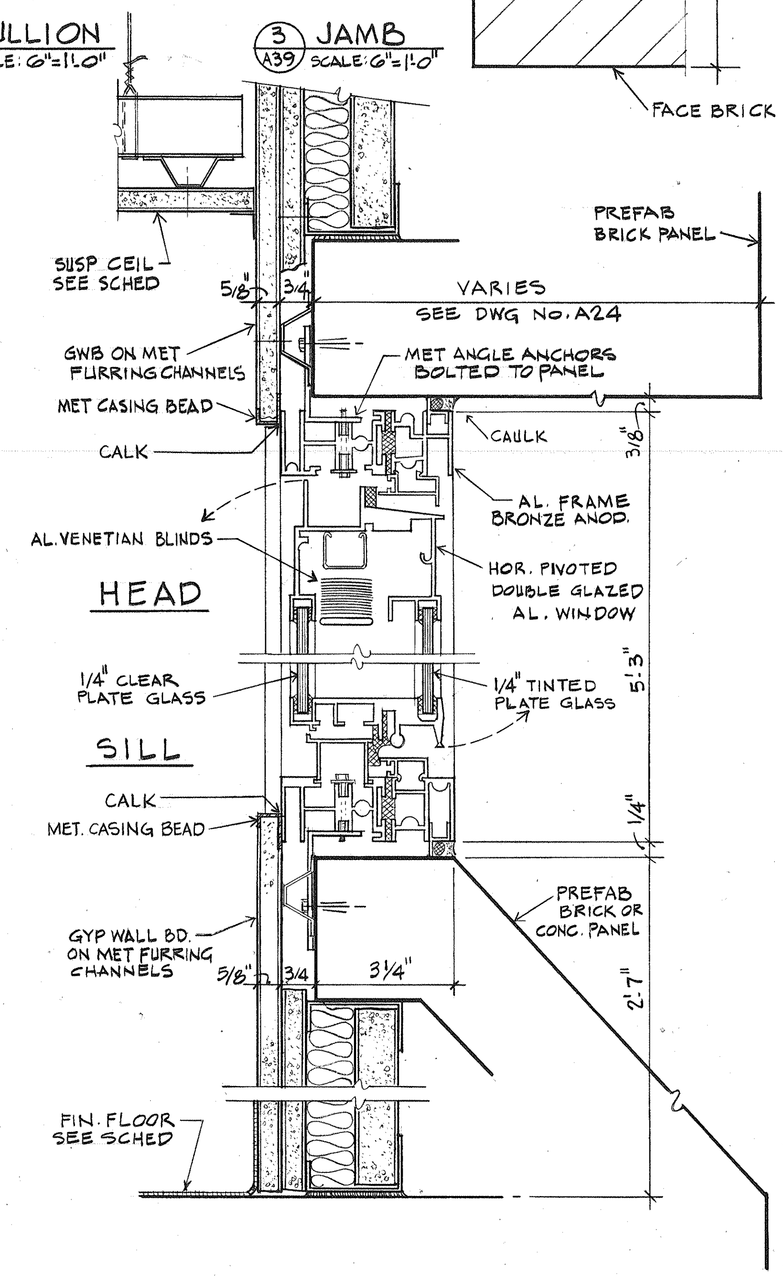

4/A39 SECTION (THRU PIVOTED WINDOW SASH)
SCALE: 6" = 1'-0" A39

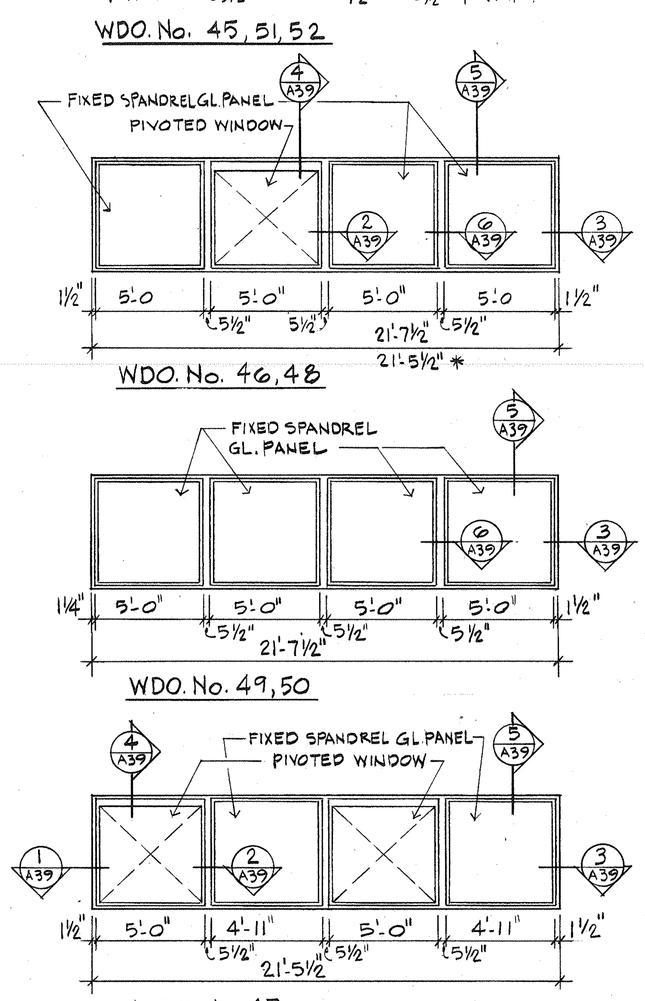

EXTERIOR WINDOW ELEVATIONS
SCALE: 1/4" = 1'-0" A9, A11, A12

RECORD DRAWING
DATE: 11-1-82

NOTE: 1) ANODIZED EXPOSED ALUMINUM PARTS: DARK BRONZE, TYP.
2) GLASS, PLATE & TEMPERED: TINTED BRONZE EXCEPT THAT INTERIOR GLASS PANE IS CLEAR GLASS AS INDICATED

GRAPHIC SCALES
1/4" = 1'-0" 12" 0 1' 2' 3' 4' 5' 6' 7' 8' 9' 10' 11'
6" = 1'-0" 3" 0 3"

ROGERS, LOVELOCK, FRITZ, ROGERS & BUTLER LOPATKA, McQUAIG & WALL CORPORATION ARCHITECTS - ENGINEERS - PLANNERS WINTER PARK, FLORIDA 32789	DEPARTMENT OF THE NAVY NAVAL FACILITIES ENGINEERING COMMAND SOUTHERN DIVISION CHARLESTON, S. C.	
DSGN GARCIA DR GARCIA CHK MURDOCK SUPV MURDOCK CH ENGR MARTEN	NAVAL REGIONAL MEDICAL CENTER ORLANDO, FLORIDA	
SUBMITTED BY DATE 20 FEB 71 FIRM MEMBER TITLE PARTNER SOUTHERN DIV — DESIGN DIVISION PDE DIR	HOSPITAL REPLACEMENT EXTERIOR WINDOW ELEVATIONS & DETAILS - SHEET 1 OF 2	
APPROVED DATE OFFICER IN CHARGE	SIZE F / CODE IDENT NO. 80091	NAVFAC DRAWING NO. 5046720
APPROVED DATE EFD FOR COMMANDER, NAVFAC	SCALE AS SHOWN	CONSTR CONTR NO. N62467-75-C-0340 SPEC 06-75-0340 SHEET 129 OF

A39

KAE 15 1133 10-73 W3250• END-SOUTH DIV-6-11012-15 CAROLINA E&F F452