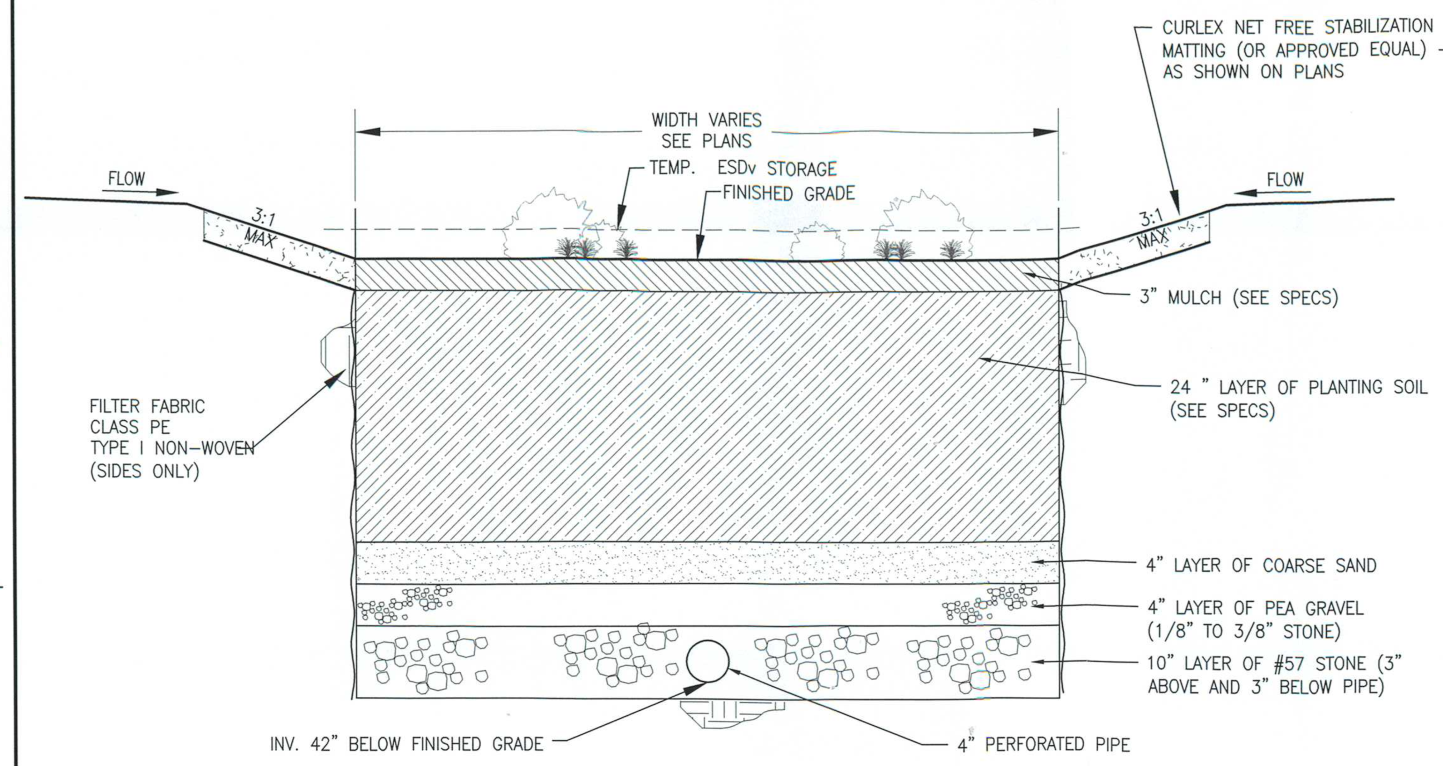


## 1 MICRO–BIORETENTION

NOT TO SCALE

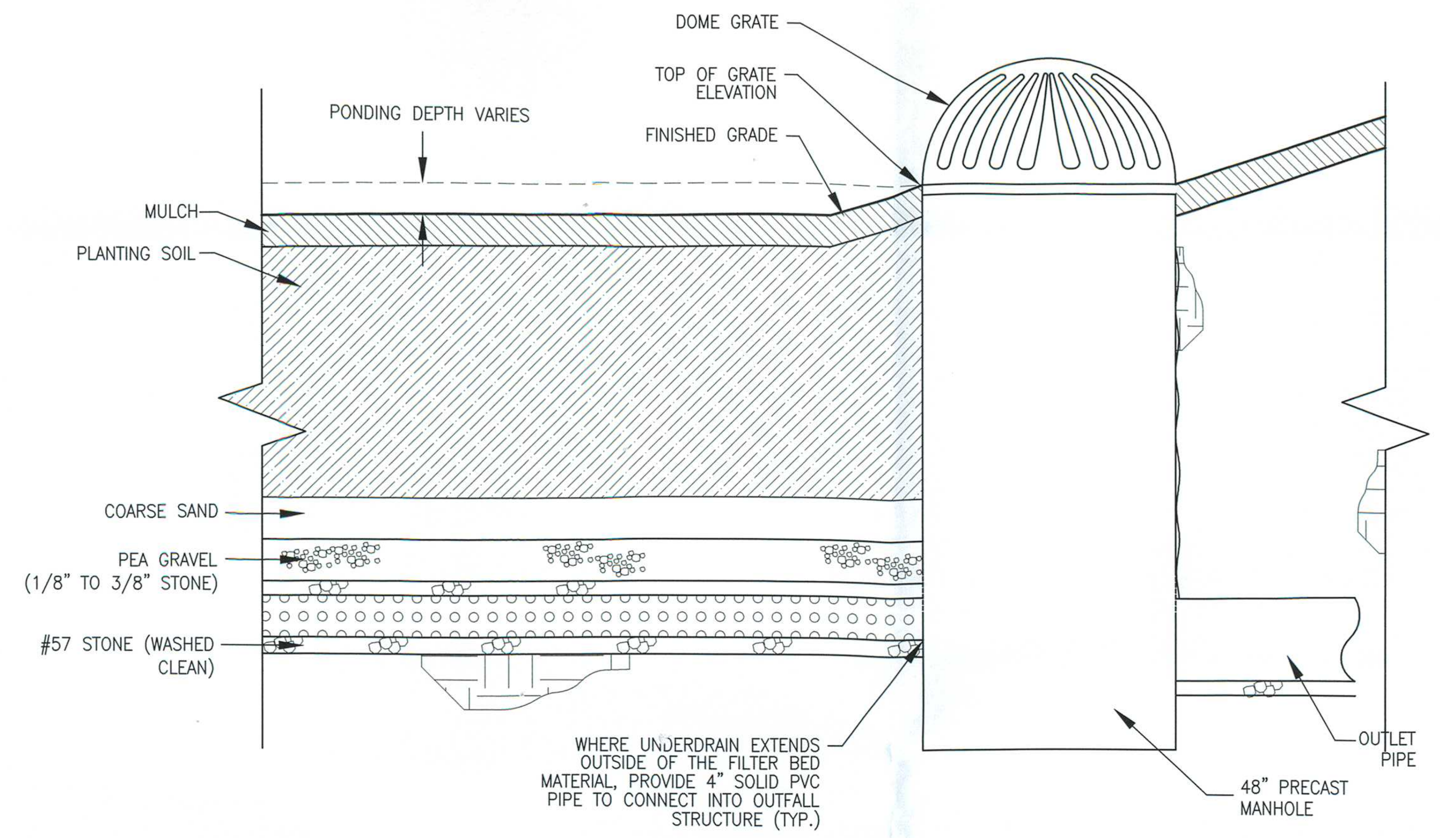


## 2 OVERFLOW DEVICE

APPLIES TO ALL MICRO–BIORETENTION FACILITIES

NOT TO SCALE

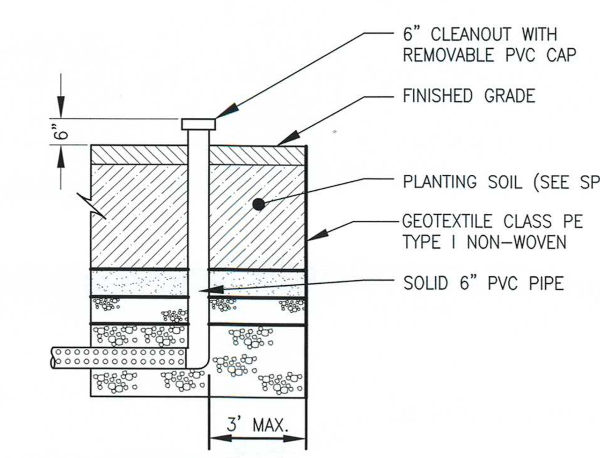


## 3 CLEAN–OUT

NOT TO SCALE

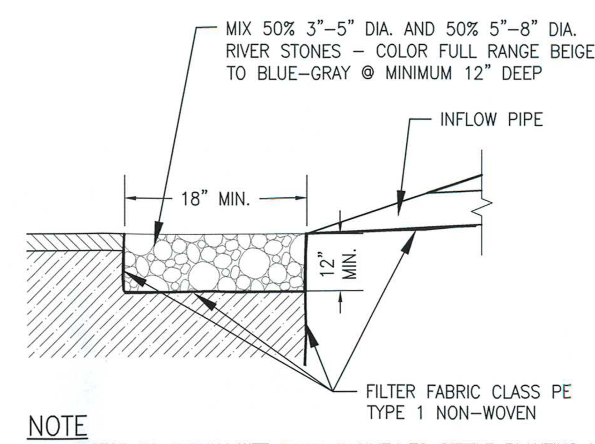


NOTE
CONTRACTOR TO EVENLY WET DOWN FACILITY TO SETTLE PLANTING MEDIA AND RE–DRESS TOP SURFACE WITH ADDITIONAL PLANTING MEDIA TO SPECIFIED SURFACE ELEVATION PRIOR TO INSTALLING MULCH AND PLANT MATERIAL.

INFLOW PIPE STONE PROTECTION

## 4 RIVER ROCK OUTFALL DETAIL

NOT TO SCALE

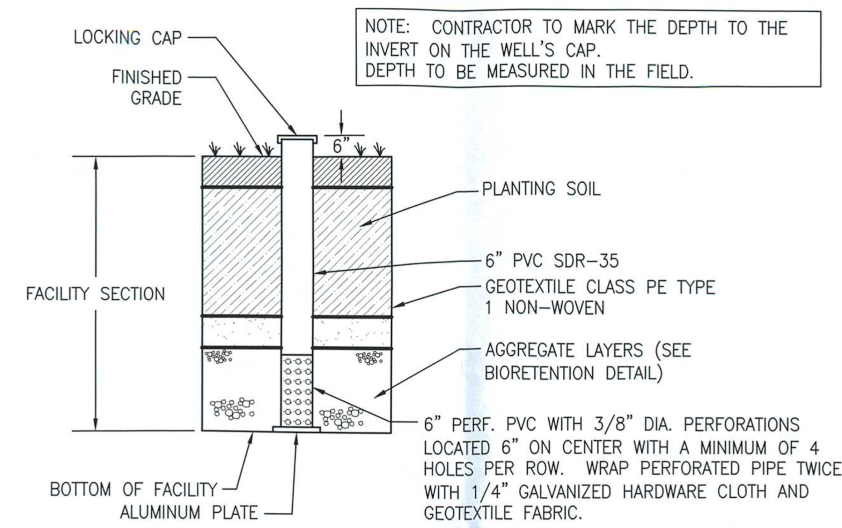


## 5 OBSERVATION WELL DETAIL

NOT TO SCALE

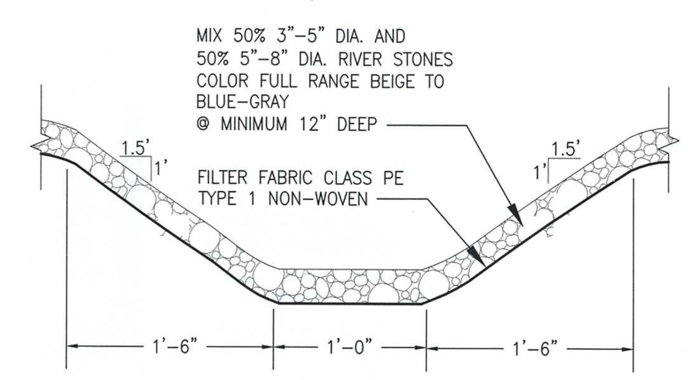


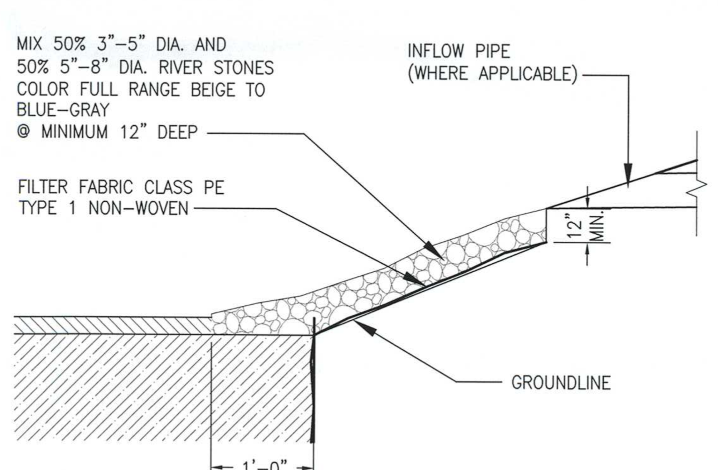


NOTES
1. FILTER FABRIC FROM SIDES OF MICRO–BIORETENTION THROUGH STONE SHALL BE CONTIGUOUS. WHERE ENDS OF THE FABRIC COME TOGETHER, THE ENDS SHALL BE OVERLAPPED BY 6 INCHES, FOLDED AND STAPLED.
2. CONTRACTOR TO EVENLY WET DOWN FACILITY TO SETTLE PLANTING MEDIA AND REDRESS TOP SURFACE WITH ADDITIONAL PLANTING MEDIA TO SPECIFIED SURFACE ELEVATION PRIOR TO INSTALLING MULCH AND PLANT MATERIAL.

SLOPED EDGE OF FACILITY

## 6 RIVER ROCK OUTFALL DETAIL

NOT TO SCALE

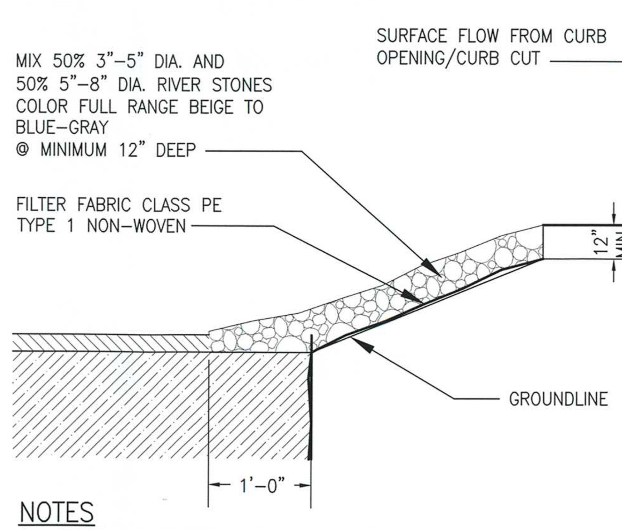


NOTES
1. FILTER FABRIC FROM SIDES OF MICRO–BIORETENTION THROUGH STONE SHALL BE CONTIGUOUS. WHERE ENDS OF THE FABRIC COME TOGETHER, THE ENDS SHALL BE OVERLAPPED BY 6 INCHES, FOLDED AND STAPLED.
2. CONTRACTOR TO EVENLY WET DOWN FACILITY TO SETTLE PLANTING MEDIA AND REDRESS TOP SURFACE WITH ADDITIONAL PLANTING MEDIA TO SPECIFIED SURFACE ELEVATION PRIOR TO INSTALLING MULCH AND PLANT MATERIAL.

SLOPED EDGE OF FACILITY

## 7 ROCK CHANNEL DETAIL

NOT TO SCALE

## AS–BUILT CERTIFICATION

I HEREBY CERTIFY THAT THE FACILITY SHOWN ON THIS PLAN WAS CONSTRUCTED AS SHOWN ON THE "AS–BUILT" PLANS AND COMPLIES WITH THE APPROVED PLANS AND SPECIFICATIONS.

PRINT NAME — ADDRESS — PHONE NUMBER

SIGNATURE — DATE — LICENSE #

## MAINTENANCE AND LIABILITY

MAINTENANCE OF THE STORMWATER MANAGEMENT FACILITY AND APPURTENANT DRAINAGE STRUCTURES SHALL BE THE RESPONSIBILITY OF THE PROPERTY OWNER. THE PROPERTY OWNER SHALL ALSO BE FULLY LIABLE FOR ALL DAMAGES OR INJURIES THAT MAY BE SUSTAINED BY ANY PERSON OR PROPERTY AS A RESULT OF ANY FAILURE OR MALFUNCTION OF THE STORMWATER MANAGEMENT FACILITY AND APPURTENANCES.

MARC DALLAIRE — PERRY POINT VA MEDICAL CENTER, PERRY POINT, MD 21902 — (410) 642–2411
PRINTED NAME — ADDRESS — PHONE NUMBER

Marc Dallaire P.E. — 10/27/2015 — Perry Point Project Section Supervisor
SIGNATURE — DATE

## SITE AREA TABULATION

| | | |
|---|---|---|
| TOTAL STUDY AREA | = | 4.29 Ac |
| EX. IMPERVIOUS AREA | = | 0.04 Ac |
| PROP. IMPERVIOUS AREA | = | 1.60 Ac |
| IMPERVIOUS AREA REQUIRING TREATMENT (IART) | = | 1.60 Ac |

## SWM STORAGE REQUIREMENTS

| REQUIREMENT | VOLUME REQ'D (CUBIC FEET) | VOL. PROV'D (CUBIC FEET) | NOTES |
|---|---|---|---|
| ESDv | 10,219 | 10,489 | MICRO–BIORETENTION |
| Rev | 601 | 771 | MICRO–BIORETENTION |
| CPV | – | – | PROVIDED BY ESDv |

## SITE DEVELOPMENT SUMMARY TABLE

| PRACTICE | SURFACE AREA | DRAINAGE AREA (AC) | IMP. AREA TREATED (AC) | ESDv PROV'D (CF) | Pe PROV'D (IN) | PONDING DEPTH |
|---|---|---|---|---|---|---|
| MICRO–BIORETENTION 1 | 802 SF | 0.46 | 0.21 | 958 | 1.25 | 6 IN. |
| MICRO–BIORETENTION 2 | 838 SF | 0.26 | 0.15 | 1,435 | 2.6 | 12 IN. |
| MICRO–BIORETENTION 3 | 769 SF | 0.31 | 0.14 | 922 | 1.8 | 6 IN. |
| MICRO–BIORETENTION 4 | 966 SF | 0.46 | 0.24 | 1,147 | 1.3 | 6 IN. |
| MICRO–BIORETENTION 5 | 721 SF | 0.33 | 0.20 | 850 | 1.2 | 6 IN. |
| MICRO–BIORETENTION 6 | 832 SF | 0.29 | 0.14 | 989 | 2.0 | 6 IN. |
| MICRO–BIORETENTION 7 | 750 SF | 0.28 | 0.16 | 913 | 1.6 | 6 IN. |
| MICRO–BIORETENTION 8 | 883 SF | 0.32 | 0.17 | 1,106 | 1.8 | 6 IN. |
| MICRO–BIORETENTION 9 | 1147 SF | 0.42 | 0.23 | 2,170 | 2.6 | 12 IN. |
| | | TOTAL | 1.64 AC | 10,489 CF | | |
| | | REQUIRED | 1.60 AC | 10,219 CF | | |

## OPERATION AND MAINTENANCE SCHEDULE

MICRO–BIORETENTION AREAS (M–6)
1. Inspection shall be performed during wet weather to determine if the facility is functioning properly. Visual inspection of all components shall be completed by the Owner. All drains shall be opened by the Owner once a year. The Owner shall keep notes of each inspection.
2. Annual maintenance of plant material, mulch layer and soil layer is required. Maintenance of mulch and soil is limited to correcting areas of erosion or wash out. Any mulch replacement shall be done in the spring. Plant material shall be checked for disease and insect infestation and maintenance will address dead material and pruning.
3. Debris and litter shall be removed as a regular operation and as needed. All appurtenances shall be kept free of trash.
4. Schedule of plant inspection will be twice a year in spring and fall. This inspection will include removal of dead and diseased vegetation considered beyond treatment, treatment of all diseased trees and shrubs and replacement of all deficient stakes and wires. Watering of plant material may be required during prolonged dry periods.
5. Mulch shall be inspected each spring. Replace mulch annually where practice treats areas with high concentrations of heavy metals. Otherwise, replace top 2–3 inches of mulch as necessary.
6. Soil erosion to be addressed on an as needed basis, with a minimum of once per month and after heavy storm events.
7. Remove accumulated sediment from the surface of the filter bed when accumulation exceeds one inch.
8. When water ponds for more than 48 hours, the top few inches of filter media should be removed and replaced.
9. All required maintenance shall be performed by the Owner or the Owner's representative at the Owner's expense.

## INSPECTION

MICRO–BIORETENTION AREAS
Regular inspections shall be made during the following stages of construction:
- During excavation to subgrade and placement and backfill of underdrain systems.
- During placement of filter media.
- During construction of appurtenant conveyance.
- Upon completion of final grading and establishment of permanent stabilization.

## STORMWATER MAINTENANCE SCHEDULE

ENVIRONMENTAL SENSITIVE DESIGN

| PRACTICE | FREQUENCY OF INSPECTION | PREVENTATIVE MAINTENANCE | MAINTENANCE REQUIREMENTS |
|---|---|---|---|
| MICRO–BIORETENTION | SEASONALLY (AND AFTER A MAJOR STORM) | | IRRIGATE DURING PROLONGED DRY PERIODS. |
| | | IF SPECIFIC PLANTS ARE NOT SURVIVING, REPLACE WITH MORE APPROPRIATE SPECIES. | REMOVE ANY DEAD OR DYING VEGETATION AND REVEGETATE. |
| | | | PRUNE VEGETATION OCCASIONALLY. |
| | | | REMOVE ACCUMULATED SEDIMENT FROM SURFACE OF FILTER BED WHEN ACCUMULATION EXCEEDS ONE INCH. |
| | | | IF WATER PONDS FOR MORE THAN 48 HOURS, REMOVE AND REPLACE THE TOP FEW INCHES OF FILTER MEDIA. |
| | | | REPLACE MULCH ANNUALLY WHERE PRACTICE TREATS AREAS WITH HIGH CONCENTRATIONS OF HEAVY METALS. OTHERWISE, REPLACE TOP 2–3 INCHES AS NECESSARY. |

## TABLE B.4.1 MATERIAL SPECIFICATIONS FOR MICRO–BIORETENTION, BIO–SWALE, RAIN GARDENS & LANDSCAPE INFILTRATION

| MATERIAL | SPECIFICATION | SIZE | NOTES |
|---|---|---|---|
| PLANTINGS | SEE PLANTING PLAN | N/A | PLANTINGS ARE SITE–SPECIFIC |
| *PLANTING SOIL (2' TO 4' DEEP) | LOAMY SAND (60–65%) & COMPOST (35–40%) OR SANDY LOAM (30%), COARSE SAND (30%) & COMPOST (40%) | N/A | USDA SOIL TYPES LOAMY SAND OR SANDY LOAM; CLAY CONTENT < 5% |
| ORGANIC CONTENT | MIN. 10% BY DRY WEIGHT (ASTM D 2974) | | |
| MULCH | SHREDDED HARDWOOD | | AGED 6 MONTHS, MINIMUM; NO PINE OR WOOD CHIPS |
| PEA GRAVEL DIAPHRAGM | PEA GRAVEL: ASTM–D–448 | NO. 8 OR NO. 9 (1/8" TO 3/8") | |
| CURTAIN DRAIN | ORNAMENTAL STONE: WASHED COBBLES | STONE: 2" TO 5" | |
| GEOTEXTILE | | N/A | PE TYPE 1 NONWOVEN OR WOVEN 125 GPM |
| GRAVEL (UNDERDRAINS AND INFILTRATION BERMS) | AASHTO M–43 | NO. 57 OR NO. 6 AGGREGATE (3/8" TO 3/4") | |
| UNDERDRAIN PIPING | F 758, TYPE PS 28 OR AASHTO M–278 | 4" TO 6" RIGID SCHEDULE 40 PVC OR SDR 35 | SLOTTED OR PERFORATED PIPE; 3/8" PERF. @ 6" ON CENTER, 4 HOLES PER ROW; MINIMUM OF 3" OF GRAVEL OVER PIPES; NOT NECESSARY UNDERNEATH PIPES. PIPE SHALL BE WRAPPED TWICE WITH 1/4 INCH GALVANIZED HARDWARE CLOTH. |
| POURED IN PLACE CONCRETE (IF REQUIRED) | MSHA MIX NO. 3; $F'_c$=3500 PSI @ 28 DAYS, NORMAL WEIGHT, AIR–ENTRAINED; REINFORCING TO MEET ASTM–615–60. | N/A | ON–SITE TESTING OF POURED–IN–PLACE CONCRETE REQUIRED: 28 DAY STRENGTH AND SLUMP TEST; ALL CONCRETE DESIGN (CAST–IN–PLACE OR PRE–CAST) NOT USING PREVIOUSLY APPROVED STATE OR LOCAL STANDARDS REQUIRES DESIGN DRAWINGS SEALED AND APPROVED BY A PROFESSIONAL STRUCTURAL ENGINEER LICENSED IN THE STATE OF MARYLAND – DESIGN TO INCLUDE MEETING ACI CODE 350.R/89; VERTICAL LOADING (H–10 OR H–20); ALLOWABLE HORIZONTAL LOADING (BASED ON SOIL PRESSURES); AND ANALYSIS OF POTENTIAL CRACKING. |
| SAND | AASHTO–M–6 OR ASTM–C–33 | 0.02" TO 0.04" | SAND SUBSTITUTIONS SUCH AS DIABASE AND GRAYSTONE (AASHTO) #10 ARE NOT ACCEPTABLE. NO CALCIUM CARBONATED OR DOLOMITIC SAND SUBSTITUTIONS ARE ACCEPTABLE. NO "ROCK DUST" CAN BE USED FOR SAND. |

*SEE MATERIAL SPECIFICATIONS FOR MDSHA BIORETENTION SOIL MIX (BSM) THIS SHEET FOR SPECIFIC BIORETENTION SOIL MIX FOR THIS PROJECT.

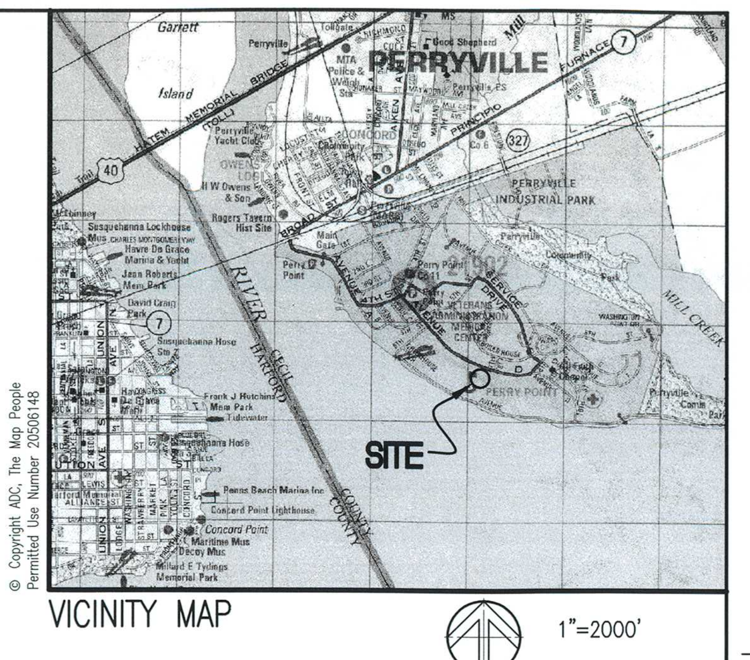


VICINITY MAP

1"=2000'

## 920.01.05 MDSHA BIORETENTION SOIL MIX

920.01.05 Bioretention Soil Mix (BSM). A homogeneous mixture composed by loose volume of 5 parts Coarse Sand, 3 parts Base Soil, and 2 parts Fine Bark. BSM shall conform to the following:

(a) Components. Components of BSM shall be sampled, tested and approved before mixing as follows:
(1) Coarse Sand. MSMT 356. Coarse Sand shall be washed silica sand or crushed glass that conforms to ASTM Fine Aggregate C–33. Coarse Sand shall include less than 1% by weight of clay or silt size particles, and less than 5% by weight of any combination of diabase, greystone, calcareous or dolomitic sand.
(2) Base Soil. Base Soil shall be tested and certified by the producer to conform to the following requirements:

| TEST PROPERTY | TEST METHOD | COMPOSITION – BASE SOIL: TEST VALUE AND AMENDMENT | | | |
|---|---|---|---|---|---|
| PROHIBITED WEEDS | – | FREE OF SEED AND VIABLE PLANT PARTS OF SPECIES IN 920.06.02(a)(b)(c) WHEN INSPECTED. | | | |
| DEBRIS | – | NO OBSERVABLE CONTENT OF CEMENT, CONCRETE, ASPHALT, CRUSHED GRAVEL OR CONSTRUCTION DEBRIS WHEN INSPECTED. | | | |
| GRADING ANALYSIS | T 87 | SIEVE SIZE | | PASSING BY WEIGHT MINIMUM % | |
| | | 2 IN. | | 100 | |
| | | NO. 4 | | 90 | |
| | | NO. 10 | | 80 | |
| TEXTURAL ANALYSIS | T 88 | PARTICLE | | % PASSING BY WEIGHT | |
| | | SIZE | mm | MINIMUM | MAXIMUM |
| | | SAND | 2.0–0.050 | 50 | 85 |
| | | SILT | 0.050–0.002 | 5 | 45 |
| | | CLAY | LESS THAN 0.002 | 5 | 10 |
| SOIL pH | D 4972 | pH OF 5.7 TO 6.9 | | | |
| ORGANIC MATTER | T 194 | 1.0 TO 10.0% BY WEIGHT | | | |
| SOLUBLE SALTS | EC1:2 (V:V) | 500 ppm (1.25 mmhos/cm) OR LESS | | | |
| HARMFUL MATERIALS | – | 920.01.01(a) | | | |

(3) Fine Bark. Fine Bark shall be the bark of hardwood trees that is milled and screened to a uniform particle size of 2 in. or less. Fine Bark shall be composted and aged for 6 months or longer, and be free from sawdust and foreign materials. A 1 to 2 lb sample of Fine Bark shall be submitted to the Landscape Operations Division for examination.

(b) Composition. BSM shall be sampled and tested according to the requirements of MSMT 356 and conform to the following:

| TEST PROPERTY | TEST METHOD | COMPOSITION – BIORETENTION SOIL MIX (BSM): TEST VALUE AND AMENDMENT | | | | |
|---|---|---|---|---|---|---|
| WEEDS | – | FREE OF SEED AND VIABLE PLANT PARTS OF SPECIES IN 920.06.02(a)(b)(c) WHEN INSPECTED. | | | | |
| DEBRIS | – | 920.01.05(a)(2) | | | | |
| TEXTURAL ANALYSIS | T 88 | PARTICLE | | % PASSING BY WEIGHT | | |
| | | SIZE | mm | MINIMUM | MAXIMUM | |
| | | SAND | 2.0–0.050 | 55 | 85 | |
| | | SILT | 0.050–0.002 | – | 20 | |
| | | CLAY | LESS THAN 0.002 | 1 | 8 | |
| SOIL pH | D 4972 | pH OF 5.7 TO 7.1 | | | | |
| ORGANIC MATTER | T 194 | MINIMUM 1.5% BY WEIGHT | | | | |

| TEST PROPERTY | TEST METHOD | ELEMENT | MINIMUM ppm | MINIMUM FIV | MAXIMUM ppm | MAXIMUM FIV |
|---|---|---|---|---|---|---|
| NUTRIENT ANALYSIS AND SOLUBLE SALTS | MEHLICH–3 | CALCIUM (Ca) | 32 | 25 | NO LIMIT | NO LIMIT |
| | | MAGNESIUM (Mg) | 15 | 25 | NO LIMIT | NO LIMIT |
| | | PHOSPHORUS (P) | 18 | 25 | 92 | 100 |
| | | POTASSIUM (K) | 22 | 25 | NO LIMIT | NO LIMIT |
| | | SULFUR ($SO_4$) | 25 | N/A | NO LIMIT | NO LIMIT |
| | EC1:2 (V:V) | SOLUBLE SALTS | 40 | N/A | 500 | N/A |
| HARMFUL MATERIALS | – | 920.01.01(a) | | | | |

(c) Amendment or Failure. BSM that does not conform to composition requirements for pH or nutrient analysis shall be amended as specified by the NMP. BSM that exceeds maximum phosphorus concentration or fails other composition requirements will not be accepted, and shall not be delivered or used as BSM.
(d) Storage. 920.01.02(b). BSM shall be stored in a stockpile that is protected from weather under tarp or shed. BSM stored for 6 months or longer shall be resampled, retested, and reapproved before use.
(e) Approval. 920.01.02(c).
(f) Certification and Delivery. 920.01.02(d).

NOTE:
IT IS THE CONTRACTOR'S RESPONSIBILITY, ON BEHALF OF THE OWNER, TO ENGAGE A LICENSED PROFESSIONAL ENGINEER TO CERTIFY THE STORMWATER MANAGEMENT FACILITY AND TO PREPARE AND SUBMIT AS–BUILT DRAWINGS. "CERTIFY" MEANS TO STATE OR DECLARE A PROFESSIONAL OPINION BASED ON SUFFICIENT AND APPROPRIATE ONSITE OBSERVATIONS AND/OR INSPECTIONS AT CRUCIAL MILESTONES DURING CONSTRUCTION OF THE FACILITY, MATERIAL TESTS CONDUCTED DURING CONSTRUCTION, AND POST–CONSTRUCTION SURVEYING AND VERIFICATION.

CRUCIAL MILESTONES INCLUDE, AT A MINIMUM, REGULAR INSPECTIONS MADE AND DOCUMENTED AT THE FOLLOWING STAGES OF CONSTRUCTION: 1) DURING EXCAVATION TO SUBGRADE, 2) DURING PLACEMENT AND BACKFILL OF UNDERDRAIN SYSTEM, 3) DURING PLACEMENT OF GEOTEXTILES AND ALL FILTER MEDIA, 4) DURING CONSTRUCTION OF APPURTENANT CONVEYANCE SYSTEMS SUCH AS OVERFLOW INLETS, OUTLETS, ETC, AND 5) UPON COMPLETION OF FINAL GRADING AND ESTABLISHMENT OF PERMANENT STABILIZATION.

APPROVED
NOV 2 0 2015
SEDIMENT & STORMWATER PLAN REVIEW DIVISION

MDE # 15-SF-0279

BID DOCUMENTS

| # | Revision | Date |
|---|---|---|

CONSULTANTS: HOPE FURRER Associates, Inc. — SITE RESOURCES Comprehensive Land Planning & Site Design Services (410) 683-3388 — leeandassociatesinc

SEAL

PROFESSIONAL CERTIFICATION. I HEREBY CERTIFY THAT THESE DOCUMENTS WERE PREPARED OR APPROVED BY ME, AND THAT I AM A DULY LICENSED PROFESSIONAL ENGINEER UNDER THE LAWS OF THE STATE OF MARYLAND, LICENSE NO. 45542, EXPIRATION DATE: 06/10/2016.

ARCHITECTS/ENGINEERS:
AE WORKS
6587 Hamilton Avenue
Pittsburgh, Pennsylvania 15206
Ph: 412.287.7333 Fax: 412.287.7334
www.ae-works.com
AE Works Project Number: 12028

**Drawing Title:** Stormwater Management Notes & Details

**Approved:** Project Director

**Project Title:** Construct a New Residential Rehabilitation Treatment Program (RRTP) Building

**Location:** Perry Point VA Medical Center, Perry Point, MD 21902

**Date:** 06-11-15 | **Checked:** JLH/MAS | **Drawn:** RSW PGP

**Project Number:** 512-531

**Building Number:**

**Drawing Number:** SWM 2.01

**Office of Construction and Facilities Management** — Department of Veterans Affairs

VA FORM 08-6231