DEPARTMENT OF VETERANS AFFAIRS
GEORGIA NATIONAL CEMETERY
4000 NICHE COLUMBARIUM

NCA PROJECT NO. 922CM3005

1080 VETERANS CEMETERY RD, CANTON, GA 30114

LOCATION MAP

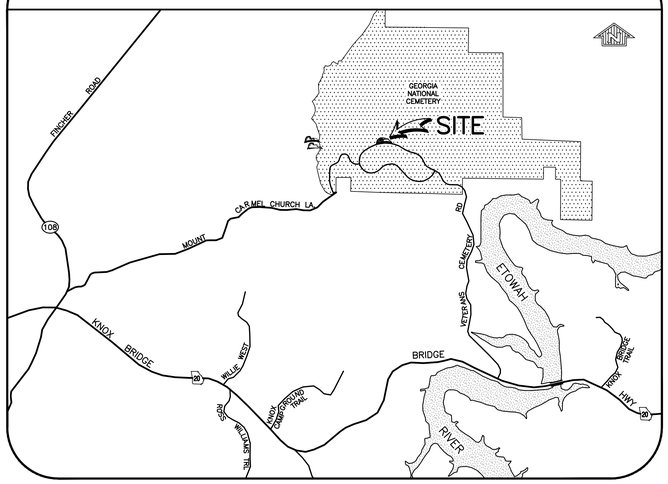

F.I.R.M. PANEL

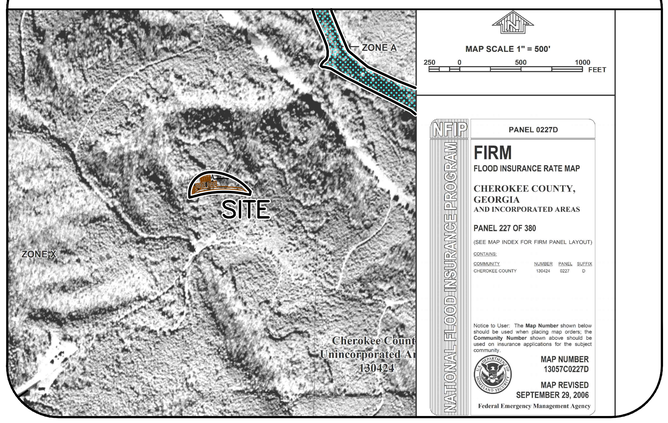

THIS PROPERTY IS NOT LOCATED WITHIN A DESIGNATED FLOODPLAIN OR BELOW THE BASE FLOOD ELEVATION ACCORDING TO FLOOD INSURANCE RATE MAP PANEL NO. 13057C00227D, DATED SEPTEMBER 29, 2006. "ZONE A": NO BASE FLOOD ELEVATION DETERMINED.

GENERAL NOTES

1. TOPOGRAPHIC INFORMATION PROVIDED FIELD–RUN TOPOGRAPHIC SURVEY PERFORMED BY AMEC FOSTER WHEELER ENVIRONMENT AND INFRASTRUCTURE COMPLETED ON MARCH 12, 2015. THE GENERAL CONTRACTOR SHALL VERIFY ALL SURVEY INFORMATION.
2. VERTICAL CONTROL IS REFERENCED TO THE NORTH AMERICAN VERTICAL DATUM OF 1988 (NAVD 88).
3. THE EXISTING UNDERGROUND UTILITIES SHOWN HEREON ARE BASED UPON AVAILABLE INFORMATION. THE CONTRACTOR SHALL BE RESPONSIBLE FOR DETERMINING THE EXACT LOCATION OF ALL UTILITIES PRIOR TO BEGINNING ANY WORK. IF UTILITIES OTHER THAN THOSE SHOWN HEREON ARE ENCOUNTERED, THE CONTRACTOR SHALL NOTIFY THE ENGINEER IMMEDIATELY AND TAKE APPROPRIATE MEASURES TO PROTECT THE LINE(S) AND ENSURE CONTINUED SERVICE. DAMAGE CAUSED TO EXISTING UTILITIES BY THE CONTRACTOR SHALL BE REPAIRED BY THE CONTRACTOR AT NO ADDITIONAL COST TO THE OWNER. THE CONTRACTOR SHALL VERIFY THE CONNECTION POINTS OF NEW UTILITIES TO EXISTING UTILITIES PRIOR TO BEGINNING CONSTRUCTION.
4. THE CONTRACTOR SHALL INSTALL TREE PROTECTION BARRICADES PRIOR TO BEGINNING EARTHWORK OPERATIONS.
5. THE CONTRACTOR SHALL NOTIFY THE ENGINEER IF UNSUITABLE MATERIAL IS DISCOVERED PRIOR TO BEGINNING ANY REMOVAL OPERATION.
6. THE CONTRACTOR SHALL ADD NEW SOD TO MATCH EXISTING.
7. CONTRACTOR SHALL GRADE ALL DISTURBED AREAS TO DRAIN FOR POSITIVE FLOW PRIOR TO FINAL APPROVAL. ALL DISTURBED AREAS TO BE RESTORED TO PRE–CONSTRUCTION CONDITION.
8. THE DESIGN ADEQUACY AND SAFETY OF ALL BRACING, SHORING AND TEMPORARY SUPPORTS, ETC. IS THE SOLE RESPONSIBILITY OF THE CONTRACTOR.
9. IN PERFORMING CONSTRUCTION OBSERVATION VISITS TO THE JOB SITE, THE ENGINEER SHALL HAVE NEITHER CONTROL OVER NOR RESPONSIBILITY FOR THE CONTRACTOR'S MEANS, METHODS, SEQUENCE, TECHNIQUES OR PROCEDURES IN PERFORMING THE WORK.
10. THE CONTRACTOR'S MEANS, METHODS, SEQUENCE, TECHNIQUES OR PROCEDURES IN PERFORMING THE WORK IS SOLELY THE RESPONSIBILITY OF THE CONTRACTOR, WHO IS ALSO RESPONSIBLE FOR COMPLYING WITH ALL HEALTH AND SAFETY PRECAUTIONS AS REQUIRED BY ANY REGULATORY AGENCY.
11. MATERIAL QUANTITIES ARE ESTIMATED FOR INFORMATION PURPOSES ONLY. CONTRACTOR IS RESPONSIBLE FOR VERIFYING ALL QUANTITIES OF REPAIRED OR REPLACED MATERIALS.
12. BURIAL CEREMONIES WILL BE SCHEDULED THROUGHOUT THE COURSE OF THIS PROJECT. DURING ALL CEREMONIES, ALL WORK SHALL STOP ESPECIALLY WHEN HEAVY EQUIPMENT ACTIVITY OR NOISE PRODUCING WORK IS BEING DONE. LIGHT WORK ACTIVITY MAY CONTINUE IF IT DOES NOT CREATE NOISE OR DISTRACTIONS TO THE CEREMONY. COORDINATE DAILY ACTIVITIES WITH THE CEMETERY DIRECTOR OR HIS APPROVED REPRESENTATIVE TO ACCOMMODATE SCHEDULED BURIALS.
13. BECAUSE OF THE SENSITIVE NATURE OF THE CEMETERY SITE, CONTRACTOR SHALL MAINTAIN EACH WORK AREA IN A CLEAN AND ORDERLY APPEARANCE. TRASH AND WASTE MATERIALS SHALL BE STORED IN APPROVED CONTAINERS AND ROUTINELY DISPOSED OF OFF–SITE. CLEANUP SHALL BE REQUIRED AT THE END OF EACH DAY AND/OR MORE FREQUENTLY AS REQUIRED.
14. THE AFFECT OF WORK ON PUBLIC ACCESS SHALL BE MINIMAL AND SHALL BE COORDINATED WITH THE CEMETERY DIRECTOR. ANY ALTERED PUBLIC TRAFFIC ROUTES SHALL BE WELL DEFINED WITH PROFESSIONALLY MADE SIGNAGE AND/OR OTHER APPROVED CONVENTIONAL METHODS.
15. THERE SHALL BE AT ALL TIMES, WHEN WORK IS BEING DONE, A COMPETENT PERSON WHO IS APPRISED OF THE CONDITION AND PROGRESS OF ALL AREAS OF WORK ON SITE. THIS COMPETENT PERSON SHALL BE ABLE TO SPEAK FOR AND ACT IN THE BEHALF OF THE CONTRACTOR. HE SHALL BE AWARE AND KNOWLEDGEABLE OF ALL THE SAFETY CONCERNS ON THE JOB SITE. HE SHALL BE EMPOWERED TO IMMEDIATELY AND EFFECTIVELY MITIGATE THE ACTIONS OF ANY WORKMAN ON SITE.
16. CONTRACTOR SHALL PREPARE AND SUBMIT A WELDING PLAN TO THE COTR PRIOR TO PERFORMING ANY FIELD WELDING. FOLLOWING APPROVAL ALL WELDS SHALL BE PERFORMED IN ACCORDANCE WITH THE APPROVED PLAN.
17. DO NOT WORK UPON NOR STORE ANY MATERIALS ON OCCUPIED GRAVE PLOTS. MAINTAIN MINIMUM DISTANCE OF 50 FEET BETWEEN CONSTRUCTION AND OCCUPIED GRAVE PLOTS.
18. NO VEHICLES OF THE CONTRACTOR OR HIS SUBS SHALL PARK ON CEMETERY ROADS.

CIVIL ABBREVIATIONS

BW	BOTTOM WALL	MAX	MAXIMUM
CO	CLEANOUT	MIN	MINIMUM
CONC	CONCRETE	NTS	NOT TO SCALE
DIA	DIAMETER	PSI	POUNDS PER SQUARE INCH
HDPE	HIGH DENSITY POLYETHYLENE	PVC	POLYVINYL CHLORIDE
HDWD	HARDWOOD	RCP	REINFORCED CONCRETE PIPE
HWY	HIGHWAY	SD	STORM DRAIN
INV	INVERT	SLCPP	SMOOTH LINED CORRUGATED PLASTIC PIPE
LA	LANDSCAPE AREA	TW	TOP OF WALL
L/P	LOW POINT	TYP	TYPICAL

EROSION CONTROL NOTES

1. ACTIVITIES PERFORMED ON THIS PROJECT MUST COMPLY WITH THE REQUIREMENTS OF GEORGIA NRCS AND GEORGIA SWCC.
2. PROVIDE SILT FENCE AND/OR OTHER CONTROL DEVICES, AS MAY BE REQUIRED, TO CONTROL SOIL EROSION.
3. ALL EROSION CONTROL DEVICES SHALL BE PROPERLY MAINTAINED DURING ALL PHASES OF CONSTRUCTION UNTIL THE COMPLETION OF ALL CONSTRUCTION ACTIVITIES AND ALL DISTURBED AREAS HAVE BEEN STABILIZED, ADDITIONAL CONTROL DEVICES MAY BE REQUIRED DURING CONSTRUCTION IN ORDER TO CONTROL EROSION AND/OR OFF SITE SEDIMENTATION. ALL TEMPORARY CONTROL DEVICES SHALL BE REMOVED ONCE CONSTRUCTION IS COMPLETE AND THE SITE IS STABILIZED.
4. THE CONTRACTOR MUST TAKE NECESSARY ACTION TO MINIMIZE THE TRACKING OF MUD ONTO THE PAVED ROADWAY FROM CONSTRUCTION AREAS, THE CONTRACTOR SHALL DAILY REMOVE MUD/SOIL FROM PAVEMENT, AS MAY BE REQUIRED.
5. ALL SEDIMENT AND EROSION CONTROL DEVICES SHALL BE INSPECTED EVERY SEVEN (7) DAYS OR AFTER EACH RAINFALL OCCURRENCE THAT EXCEEDS ONE–HALF (0.5) INCH. DAMAGED OR INEFFECTIVE DEVICES SHALL BE REPAIRED TO REPLACED, AS NECESSARY.
6. THE CONTRACTOR SHALL GRASS ALL AREAS DISTURBED BY CONSTRUCTION. STABILIZATION MEASURES SHALL BE INITIATED AS SOON AS PRACTICAL IN PORTIONS OF THE SITE WHERE CONSTRUCTION ACTIVITIES HAVE TEMPORARILY OR PERMANENTLY CEASED, BUT IN NO CASE MORE THAN FOURTEEN (14) DAYS AFTER WORK HAS CEASED, UNLESS ACTIVITY IN THAT PORTION OF THE SITE WILL RESUME WITHIN TWENTY–ONE (21) DAYS. IF WORK IS SUSPENDED OR DELAYED FOR MORE THAN 14 DAYS, THE CONTRACTOR SHALL TEMPORARILY STABILIZE THE DISTURBED AREA AT NO ADDITIONAL COST TO THE OWNER.

APPLICABLE CODES AND STANDARDS

- '12 IBC – 2012 International Building Code
- '12 IEBC – 2012 International Existing Building Code
- '12 IFC – 2012 International Fire Code
- '12 IMC – 2012 International Mechanical Code
- '12 IFGC – 2012 International Fuel Gas Code
- '12 IPC – 2012 International Plumbing Code
- '11 NEC – 2011 National Electrical Code
- '06 IECC – 2006 International Energy Conservation Code
- '12 IPMC – 2012 International Property Maintenance Code
- '10 ADA Standards – 2010 ADA Standards for Accessible Design

INDEX OF DRAWINGS

SHEET NO.	DRAWING NO.	SHEET TITLE
1	X-001	COVER SHEET
2	B-101	CONSTRUCTION ACCESS ROUTE
3	B-102	EXISTING CONDITIONS
4	D-101	DEMOLITION PLAN
5	C-101	SITE PLAN
6	C-102	GRADING AND DRAINAGE PLAN
7	C-103	INITIAL EROSION & SEDIMENT CONTROL PLAN
8	C-104	INTERMEDIATE EROSION & SEDIMENT CONTROL PLAN
9	C-105	FINAL EROSION & SEDIMENT CONTROL PLAN
10	C-201	COLUMBARIUM LAYOUT ENLARGEMENT
11	C-202	COLUMBARIUM STORM ENLARGEMENT
12	C-203	COLUMBARIUM IDENTIFICATION PLAN
13	C-211	ROADWAY PLAN AND PROFILE
14	C-212	WALLS PLAN AND PROFILES
15	C-213	STORM SEWER PROFILES
16	C-501	DETAILS 1
17	C-502	DETAILS 2
18	C-503	DETAILS 3
19	C-504	DETAILS 4
20	C-505	DETAILS 5
21	C-506	DETAILS 6
22	C-507	EROSION & SEDIMENT CONTROL DETAILS
23	C-508	EROSION & SEDIMENT CONTROL DETAILS
24	C-601	EROSION & SEDIMENT CONTROL NOTES
25	C-602	EROSION & SEDIMENT CONTROL NOTES
26	L-101	LANDSCAPE PLAN
27	I-101	IRRIGATION PLAN
28	I-102	EXISTING IRRIGATION CONTROLLER CONNECTION PLAN
29	I-103	IRRIGATION DETAILS
30	I-104	IRRIGATION DETAILS
31	S-501	COLUMBARIUM FOOTING DETAILS

GEORGIA811 Utilities Protection Center, Inc

Know what's below. Call before you dig.

PROJECT SUMMARY

COLUMBARIUM NICHES	4000

BID DOCUMENTS

Revisions | Date

PRIME:

amec foster wheeler

AMEC FOSTER WHEELER
ENVIRONMENT & INFRASTRUCTURE
1075 BIG SHANTY ROAD NW,
SUITE 100
KENNESAW, GA. 30144
(770) 421–3400
AMEC PROJECT: 6166–15–0011

MEP ENGINEER:

GEORGIA REGISTERED No. 769 LANDSCAPE ARCHITECT CHRIS AUBREY PHILLIPS 10-23-15

GEORGIA REGISTERED No. 15884 PROFESSIONAL ENGINEER JAMES L. STUDER

IRRIGATION DESIGNER:

Irrigation Consultant Services
2231 Weatherstone Circle
Conyers, GA 30094
(770) 929-0884, fax (770) 760-8025

NATIONAL CEMETERY ADMINISTRATION

Drawing Title: COVER SHEET

Project Title: 4000 NICHE COLUMBARIUM GEORGIA NATIONAL CEMETERY

Date: 23 OCTOBER 2015

Project No. 922CM3005

Approved: Director, Technical Support Service

Building Number | Checked | Drawn

Approved: Chief, Architectual & Engineering Division

Location: 1080 VETERANS CEMETERY RD, CANTON, GA 30114

DRAWING NO. X-001

Sheet 1 Of 31

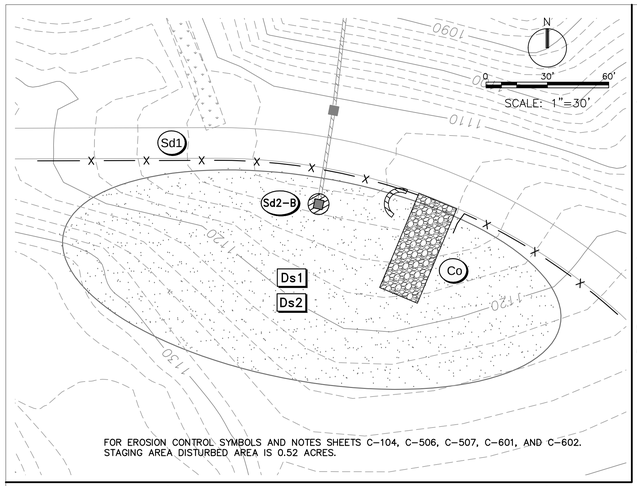

FOR EROSION CONTROL SYMBOLS AND NOTES SHEETS C-104, C-506, C-507, C-601, AND C-602.
STAGING AREA DISTURBED AREA IS 0.52 ACRES.

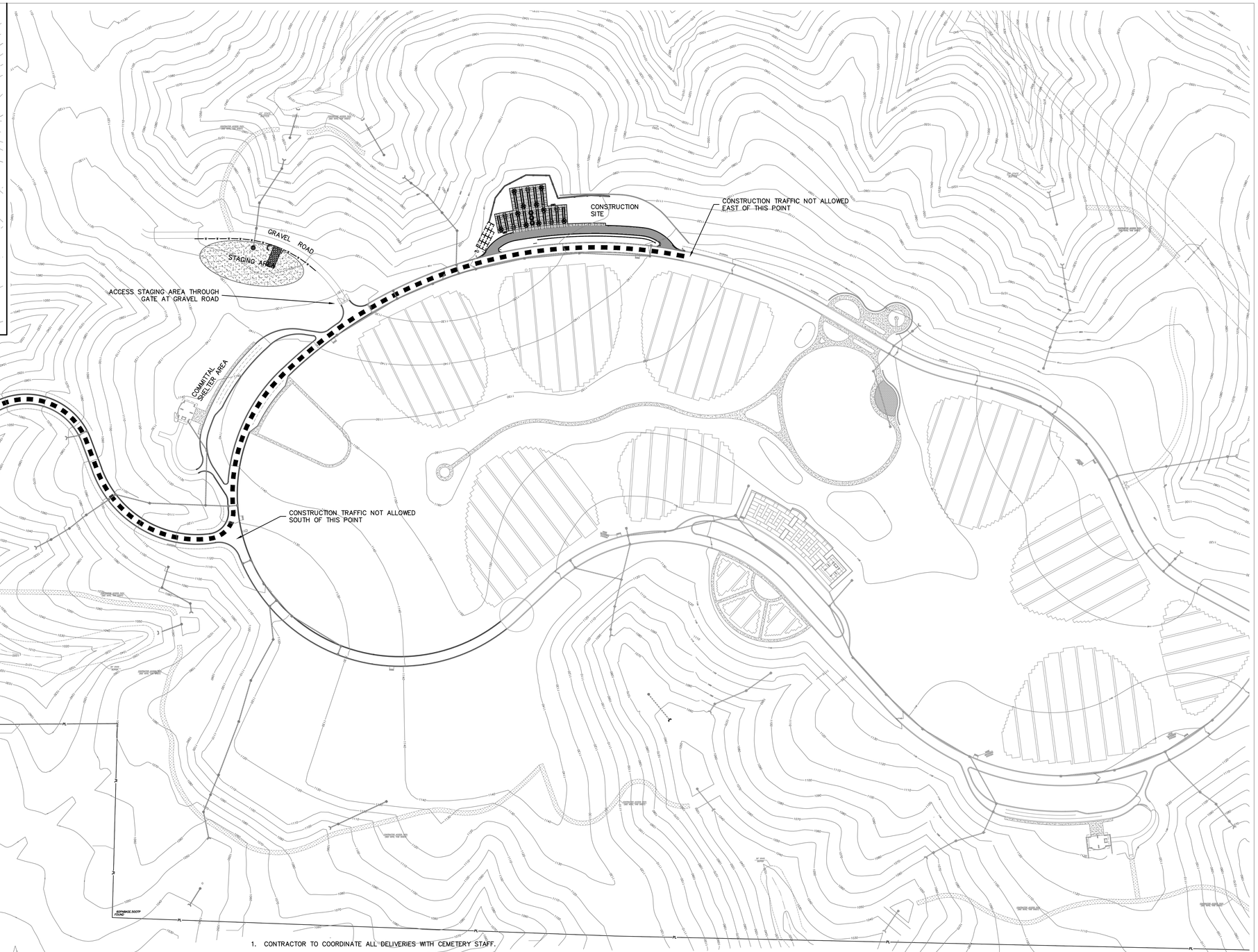

1. CONTRACTOR TO COORDINATE ALL DELIVERIES WITH CEMETERY STAFF.
2. BURIAL CEREMONIES WILL BE SCHEDULED THROUGHOUT THE COURSE OF THIS PROJECT. DURING ALL CEREMONIES, ALL WORK SHALL STOP ESPECIALLY WHEN HEAVY EQUIPMENT ACTIVITY OR NOISE PRODUCING WORK IS BEING DONE. LIGHT WORK ACTIVITY MAY CONTINUE IF IT DOES NOT CREATE NOISE OR DISTRACTIONS TO THE CEREMONY. COORDINATE DAILY ACTIVITIES WITH THE CEMETERY DIRECTOR OR HIS APPROVED REPRESENTATIVE TO ACCOMMODATE SCHEDULED BURIALS.
3. BECAUSE OF THE SENSITIVE NATURE OF THE CEMETERY SITE, CONTRACTOR SHALL MAINTAIN EACH WORK AREA IN A CLEAN AND ORDERLY APPEARANCE. TRASH AND WASTE MATERIALS SHALL BE STORED IN APPROVED CONTAINERS AND ROUTINELY DISPOSED OF OFF-SITE. CLEANUP SHALL BE REQUIRED AT THE END OF EACH DAY AND/OR MORE FREQUENTLY AS REQUIRED.
4. THE AFFECT OF WORK ON PUBLIC ACCESS SHALL BE MINIMAL AND SHALL BE COORDINATED WITH THE CEMETERY DIRECTOR. ANY ALTERED PUBLIC TRAFFIC ROUTES SHALL BE WELL DEFINED WITH PROFESSIONALLY MADE SIGNAGE AND/OR OTHER APPROVED CONVENTIONAL METHODS.
5. THERE SHALL BE AT ALL TIMES, WHEN WORK IS BEING DONE, A COMPETENT PERSON WHO IS APPRISED OF THE CONDITION AND PROGRESS OF ALL AREAS OF WORK ON SITE. THIS COMPETENT PERSON SHALL BE ABLE TO SPEAK FOR AND ACT IN THE BEHALF OF THE CONTRACTOR. HE SHALL BE AWARE AND KNOWLEDGEABLE OF ALL THE SAFETY CONCERNS ON THE JOB SITE. HE SHALL BE EMPOWERED TO IMMEDIATELY AND EFFECTIVELY MITIGATE THE ACTIONS OF ANY WORKMAN ON SITE.
6. DO NOT WORK UPON NOR STORE ANY MATERIALS ON OCCUPIED GRAVE PLOTS. MAINTAIN A MINIMUM DISTANCE OF 50 FEET BETWEEN THE CONSTRUCTION AND THE OCCUPIED GRAVE PLOTS.

N

0 50' 100' 200'
SCALE: 1"=100'

BID DOCUMENTS

Revisions | Date

PRIME:
AMEC FOSTER WHEELER
ENVIRONMENT & INFRASTRUCTURE
1075 BIG SHANTY ROAD NW,
SUITE 100
KENNESAW, GA. 30144
(770) 421-3400
AMEC PROJECT: 6166-15-0011

MEP ENGINEER:

GEORGIA REGISTERED PROFESSIONAL ENGINEER No. 15956 JAMES L. STUDER

IRRIGATION DESIGNER:
Irrigation Consultant Services
2231 Weatherstone Circle
Conyers, GA 30094
(770) 929-0884, fax (770) 760-8025

NATIONAL CEMETERY ADMINISTRATION

Drawing Title: CONSTRUCTION ACCESS ROUTE	Project Title: 4000 NICHE COLUMBARIUM GEORGIA NATIONAL CEMETERY		Date: 23 OCTOBER 2015
			Project No. 922CM3005
Approved: Director, Technical Support Service	Building Number	Checked / Drawn	DRAWING NO. B-101
Approved: Chief, Architectual & Engineering Division	Location: 1080 VETERANS CEMETERY RD, CANTON, GA 30114		Sheet 2 Of 31

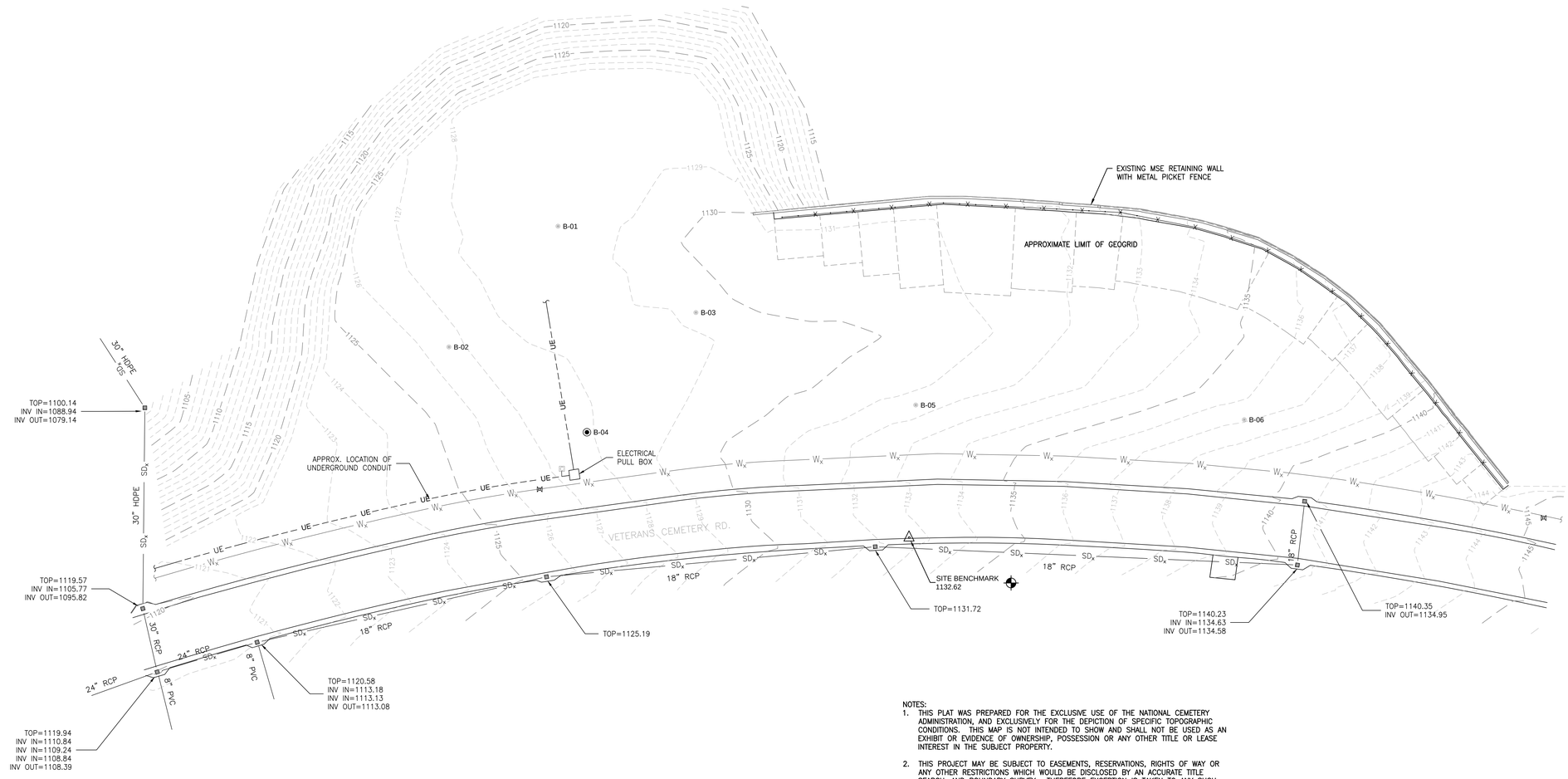

NOTES:

1. THIS PLAT WAS PREPARED FOR THE EXCLUSIVE USE OF THE NATIONAL CEMETERY ADMINISTRATION, AND EXCLUSIVELY FOR THE DEPICTION OF SPECIFIC TOPOGRAPHIC CONDITIONS. THIS MAP IS NOT INTENDED TO SHOW AND SHALL NOT BE USED AS AN EXHIBIT OR EVIDENCE OF OWNERSHIP, POSSESSION OR ANY OTHER TITLE OR LEASE INTEREST IN THE SUBJECT PROPERTY.
2. THIS PROJECT MAY BE SUBJECT TO EASEMENTS, RESERVATIONS, RIGHTS OF WAY OR ANY OTHER RESTRICTIONS WHICH WOULD BE DISCLOSED BY AN ACCURATE TITLE SEARCH, AND BOUNDARY SURVEY. THEREFORE EXCEPTION IS TAKEN TO ANY SUCH ITEMS.
3. THE FIELD DATA UPON WHICH THIS PLAT IS BASED WAS COLLECTED MARCH 12, 2015 USING A TOPCON GPT SERIES TOTAL STATION, AND TOPCON HIPER XT DUAL FREQUENCY GPS RECEIVERS.
4. THE HORIZONTAL AND VERTICAL DATUM FROM WHICH THIS TOPOGRAPHIC SURVEY WAS PREPARED WAS ESTABLISHED BY GPS STATIC OBSERVATIONS PERFORMED ON MARCH 12, 2015 AND PROCESSED BY THE NATIONAL GEODETIC SURVEY ONLINE POSITIONING USER SERVICE (OPUS) AND IS BASED ON THE NORTH AMERICAN DATUM 83 (NAD 83), AND VERTICAL DATUM IS BASED ON NORTH AMERICAN VERTICAL DATUM 88 (NAVD 88).
5. THE UTILITIES SHOWN HEREON HAVE BEEN LOCATED FROM ABOVE GROUND, VISIBLE EVIDENCE. THE SURVEYOR MAKES NO GUARANTEE THAT THE UTILITIES SHOWN COMPRISE ALL SUCH UTILITIES IN THE AREA, EITHER IN SERVICE OR ABANDONED. THE SURVEYOR FURTHER DOES NOT WARRANT THAT THE UNDERGROUND UTILITIES SHOWN ARE IN THE EXACT LOCATION INDICATED ALTHOUGH HE DOES CERTIFY THAT THEY ARE LOCATED AS ACCURATELY AS POSSIBLE FROM INFORMATION AVAILABLE. THE SURVEYOR HAS NOT PHYSICALLY LOCATED THE UNDERGROUND UTILITIES.
6. REFER TO GEOTECHNICAL REPORT FOR BORING INFORMATION TITLED "REPORT OF A GEOTECHNICAL EXPLORATION" DONE BY AMEC FOSTER WHEELER ENVIRONMENT & INFRASTRUCTURE, DATED MARCH 24, 2015.
7. THE GEOGRID LOCATION AS SHOWN IS BASED UPON THE DOCUMENTS "ATLANTA AREA NATIONAL CEMETERY KEYSTONE CENTURY WALL SYSTEM" PREPARED BY SOIL REINFORCEMENT DESIGN, INC. AND DATED FEB 1, 2005. THE CONTRACTOR IS TO USE EXTREME CARE IN THE CONSTRUCTION OF THIS PROJECT TO INSURE THAT THE STRUCTURAL INTEGRITY OF THE WALL IS MAINTAINED.

LEGEND:

LINE TYPES

- SD_x — STORM SEWER LINE
- 1140 — CONTOUR LINE
- X — FENCE
- UE — ELECTRICAL CONDUIT
- W_x — WATER LINE

SYMBOLS

- BORING HOLE
- STORM CATCH BASIN
- IRRIGATION CONTROL VALVE
- TELECOMMUNICATION BOX

N

0 10' 20' 40'

SCALE: 1"=20'

BID DOCUMENTS

Revisions	Date

PRIME:

amec foster wheeler

AMEC FOSTER WHEELER
ENVIRONMENT & INFRASTRUCTURE
1075 BIG SHANTY ROAD NW,
SUITE 100
KENNESAW, GA. 30144
(770) 421-3400
AMEC PROJECT: 6166-15-0011

MEP ENGINEER:

GEORGIA REGISTERED No. 15884 PROFESSIONAL ENGINEER JAMES L. STUDER

IRRIGATION DESIGNER:

Irrigation Consultant Services
2231 Weatherstone Circle
Conyers, GA 30094
(770) 929-0884, fax (770) 760-8025

NATIONAL CEMETERY ADMINISTRATION

Drawing Title	Project Title	Date
EXISTING CONDITIONS	4000 NICHE COLUMBARIUM GEORGIA NATIONAL CEMETERY	23 OCTOBER 2015
		Project No. 922CM3005
Approved: Director, Technical Support Service	Building Number / Checked / Drawn	DRAWING NO. B-102
Approved: Chief, Architectual & Engineering Division	Location: 1080 VETERANS CEMETERY RD, CANTON, GA 30114	Sheet 3 Of 31

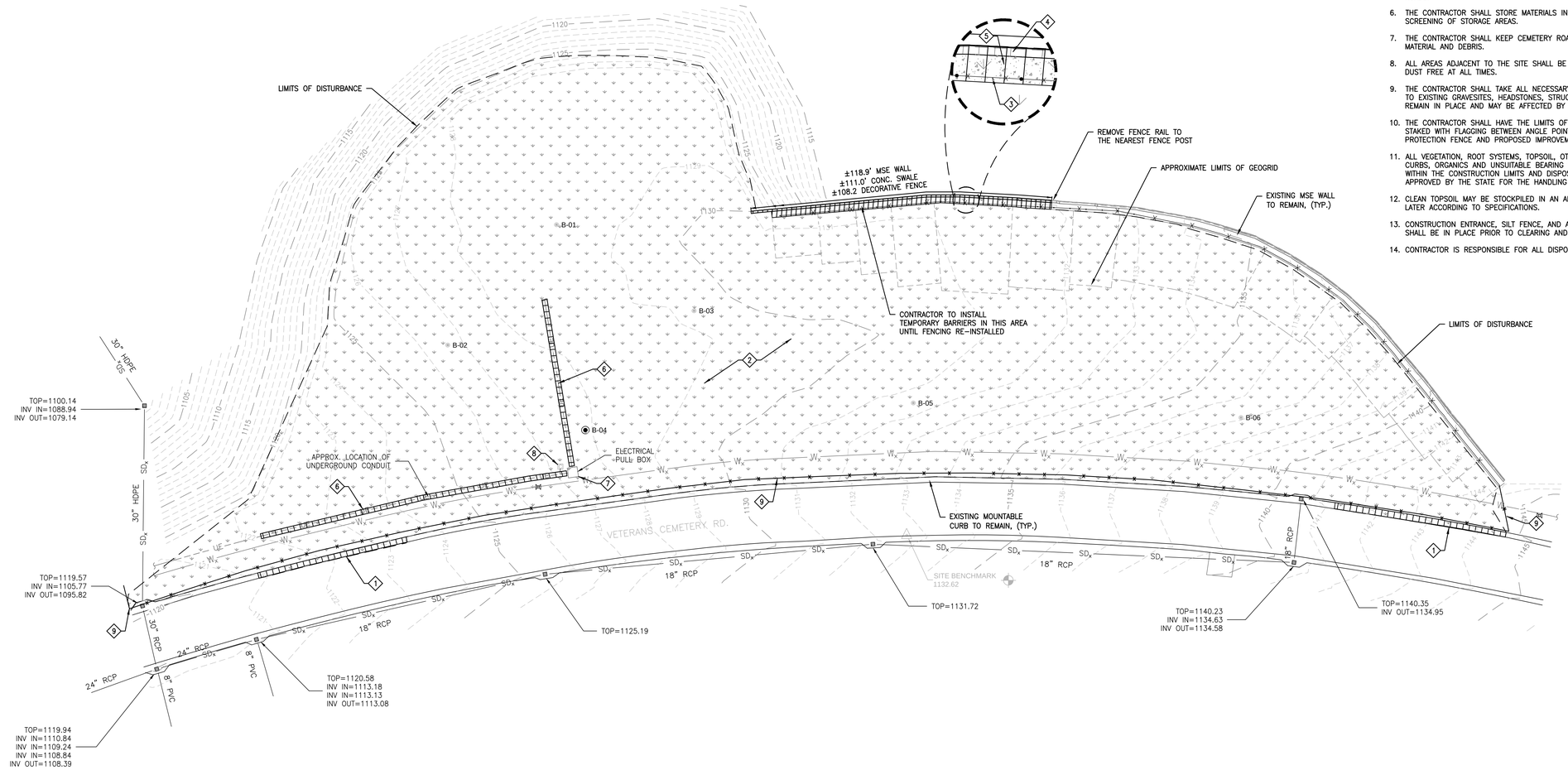

DEMOLITION NOTES:

1. INSTALL AND MAINTAIN PERIMETER SILT BARRIERS IN ACCORDANCE WITH DETAIL. REMOVAL OF SILT BARRIER IS CONTINGENT UPON FINAL APPROVAL FROM THE OWNER.
2. THE CONTRACTOR SHALL COORDINATE WITH THE PROPER LOCAL AUTHORITIES OR RESPECTIVE UTILITY COMPANIES TO LOCATE UNDERGROUND UTILITIES PRIOR TO COMMENCING THE DEMOLITION WORK.
3. THE CONTRACTOR SHALL BE RESPONSIBLE FOR LOCATION, VERIFICATION, SUPPORT, AND PROTECTION OF ALL ABOVEGROUND AND UNDERGROUND UTILITIES TO REMAIN IN PLACE.
4. THE CONTRACTOR WILL COORDINATE WITH WITH THE CEMETERY DIRECTOR DAILY ON THE BURIAL SCHEDULE.
5. THE CONTRACTOR AND SUBCONTRACTOR SHALL NOT PARK OR QUEUE VEHICLES ON CEMETERY ROADS.
6. THE CONTRACTOR SHALL STORE MATERIALS IN AREAS APPROVED BY THE COTR. PROVIDE SCREENING OF STORAGE AREAS.
7. THE CONTRACTOR SHALL KEEP CEMETERY ROADS CLEAN OF ALL CONSTRUCTION RELATED MATERIAL AND DEBRIS.
8. ALL AREAS ADJACENT TO THE SITE SHALL BE MAINTAINED IN A CLEAN CONDITION, MUD AND DUST FREE AT ALL TIMES.
9. THE CONTRACTOR SHALL TAKE ALL NECESSARY PRECAUTIONS TO ENSURE NO DAMAGE OCCURS TO EXISTING GRAVESITES, HEADSTONES, STRUCTURES, TREES AND UTILITIES THAT ARE TO REMAIN IN PLACE AND MAY BE AFFECTED BY CONSTRUCTION OPERATIONS.
10. THE CONTRACTOR SHALL HAVE THE LIMITS OF CLEARING AND DEMOLITION AND ALL BUFFERS STAKED WITH FLAGGING BETWEEN ANGLE POINTS TO ENSURE THE PROPER LOCATION OF TREE PROTECTION FENCE AND PROPOSED IMPROVEMENTS PRIOR TO CLEARING AND DEMOLITION.
11. ALL VEGETATION, ROOT SYSTEMS, TOPSOIL, OTHER DELETERIOUS MATERIAL, EXISTING PAVEMENT, CURBS, ORGANICS AND UNSUITABLE BEARING SOILS SHALL BE STRIPPED FROM THE SURFACE WITHIN THE CONSTRUCTION LIMITS AND DISPOSED OF OFF-SITE TO A DISPOSAL FACILITY APPROVED BY THE STATE FOR THE HANDLING OF CLEARING AND DEMOLITION MATERIALS.
12. CLEAN TOPSOIL MAY BE STOCKPILED IN AN AREA APPROVED BY THE OWNER AND REUSED LATER ACCORDING TO SPECIFICATIONS.
13. CONSTRUCTION ENTRANCE, SILT FENCE, AND ANY OTHER REQUIRED EROSION CONTROL DEVICE SHALL BE IN PLACE PRIOR TO CLEARING AND DEMOLITION OPERATIONS.
14. CONTRACTOR IS RESPONSIBLE FOR ALL DISPOSAL FEES.

KEY NOTES

1. REMOVE EXISTING CURB IN THIS AREA. CONTRACTOR IS RESPONSIBLE FOR PROTECTING EXISTING PAVING AND REPAIRING AT CONTRACTOR'S EXPENSE IF DAMAGED.
2. EXISTING TURF TO BE REMOVED AS NECESSARY FOR PROPOSED CONSTRUCTION. TOPSOIL SHALL BE STOCKPILED AND REUSED.
3. REMOVE AND SALVAGE EXISTING DECORATIVE FENCE AND REINSTALL AFTER CONCRETE SWALE RECONSTRUCTED AND CAP BLOCKS ARE REINSTALLED.
4. REMOVE AND SALVAGE EXISTING RETAINING WALL BLOCKS AND CAP STONES. REINSTALL CAP STONES AFTER RETAINING WALL BLOCKS ARE SET TO NEW ELEVATION.
5. REMOVE EXISTING CONCRETE SWALE.
6. REMOVE EXISTING CONDUIT UP TO NEW LOCATION OF ELECTRICAL PULL BOX.
7. REMOVE AND SALVAGE EXISTING ELECTRICAL PULL BOX. FOR NEW LOCATION SEE SITE PLAN.
8. REMOVE AND SALVAGE EXISTING COMMUNICATION BOX. FOR NEW LOCATION SEE SITE PLAN.
9. CONSTRUCTION FENCE.

N

0 10' 20' 40'

SCALE: 1"=20'

BID DOCUMENTS

Revisions	Date

PRIME:

amec foster wheeler

AMEC FOSTER WHEELER
ENVIRONMENT & INFRASTRUCTURE
1075 BIG SHANTY ROAD NW,
SUITE 100
KENNESAW, GA. 30144
(770) 421-3400
AMEC PROJECT: 6166-15-0011

MEP ENGINEER:

GEORGIA REGISTERED No. 15884 PROFESSIONAL ENGINEER JAMES L. STUDER

IRRIGATION DESIGNER:

Irrigation Consultant Services
2231 Weatherstone Circle
Conyers, GA 30094
(770) 929-0884, fax (770) 760-8025

NATIONAL CEMETERY ADMINISTRATION

Drawing Title	Project Title	Date
DEMOLITION PLAN	4000 NICHE COLUMBARIUM GEORGIA NATIONAL CEMETERY	23 OCTOBER 2015
		Project No. 922CM3005
Approved: Director, Technical Support Service	Building Number / Checked / Drawn	DRAWING NO. D-101
Approved: Chief, Architectual & Engineering Division	Location: 1080 VETERANS CEMETERY RD, CANTON, GA 30114	Sheet 4 Of 31

KEY NOTES

1. 24" WIDE VERTICAL FACE CONCRETE CURB AND GUTTER (SEE 5/C-504)
2. TRANSITION FROM VERTICAL FACE CURB TO ZERO CURB HEIGHT (SEE 2/C-504)
3. TRANSITION FROM VERTICAL FACE CURB TO ROLL-BACK CURB (SEE 6/C-504)
4. ASPHALT PAVING (SEE 1/C-504)
5. CONCRETE PAVING (SEE 4/C-504)
6. NEW/EXISTING PAVEMENT INTERFACE (SEE 7/C-504)
7. FLOWER STRIP WITH PERFORATED DRAIN PIPE. (TYP.) (SEE 2/C-501)
8. DOUBLE SIDED 240 NICHE WALL (TYP.) (SEE 6/C-501)
9. DOUBLE SIDED 320 NICHE WALL (TYP.) (SEE 6/C-501)
10. PLANTER WALL (SEE 2/C-503)
11. UNDERGROUND STORMWATER VAULT (SEE 4/C-505)
12. MECHANICALLY STABILIZED EARTH (MSE) RETAINING WALL, SEE ADDITIONAL INFORMATION ON SHEET C-212
13. ELECTRIC PULL BOX NEW LOCATION
14. COMMUNICATION BOX NEW LOCATION
15. CONCRETE MOW STRIP AND PROPOSED FENCE. FENCE TO MATCH EXISTING FENCE. APPROXIMATE LENGTH 278 FT. (SEE 14 & 15/C-504)
16. VASE WATERING STATION (SEE 5/C-503)
17. DO NOT ENTER SIGN TYPE NC-03.01 B-m1 (SEE 1/C-506)
18. STOP SIGN TYPE NC-03.01 A-m1 (SEE 1/C-506)
19. COLUMBARIUM SIGN TYPE NC-04.01 B-m1 (SEE 1/C-506)
20. REINSTALL SALVAGED DECORATIVE FENCE, RETAINING WALL BLOCKS AND CAP STONES, AND CONSTRUCT NEW PAVED SWALE. APPROXIMATE LENGTH 108 FT.
21. CONCRETE FLUSH WITH ASPHALT PAVING (SEE 3/C-504)
22. LANDSCAPE AREA
23. COLUMBARIUM SIGN (SEE 2/C-506)

SEE SHEET C-201 FOR PLAZA JOINTING PLAN

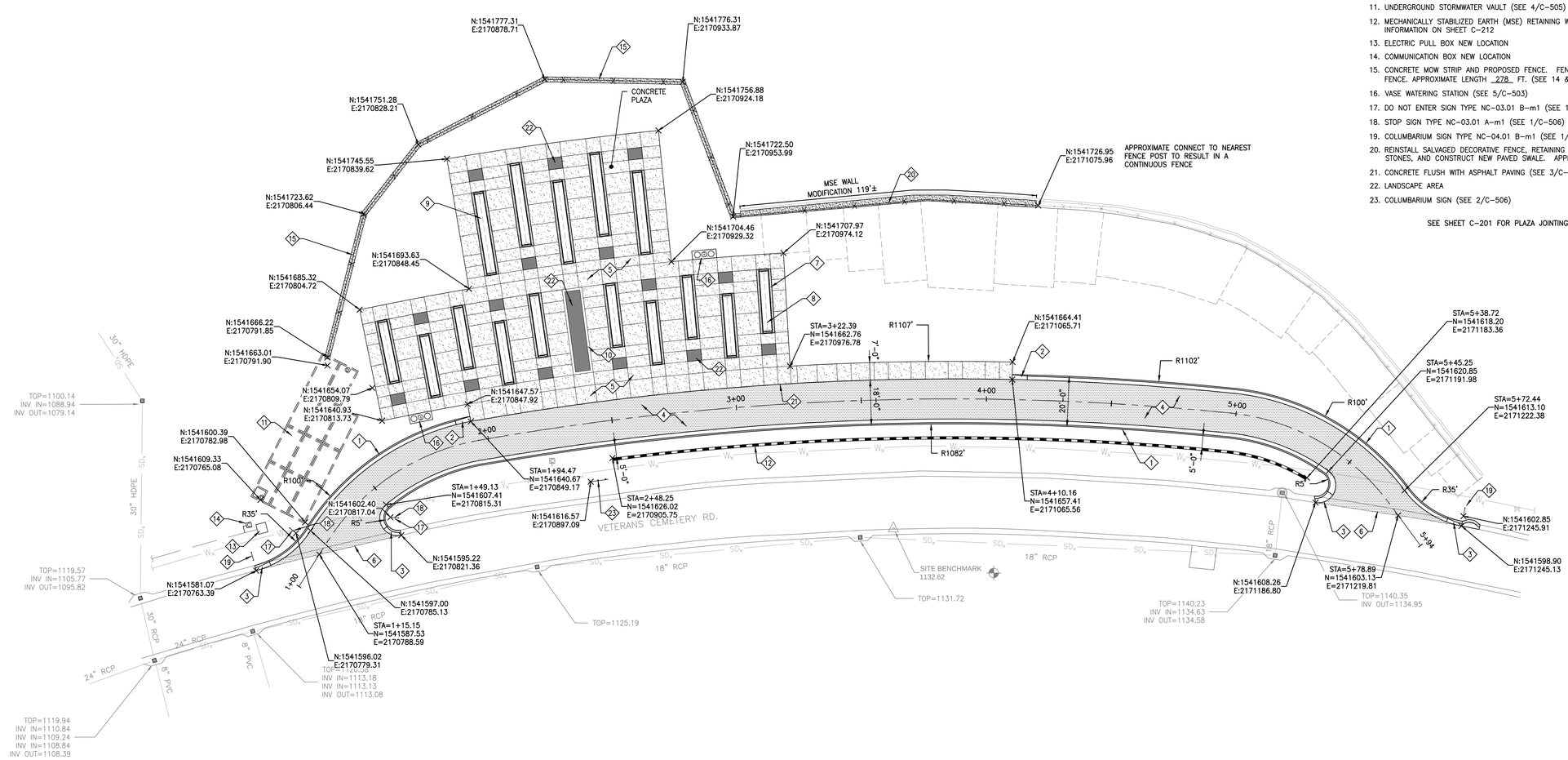

LEGEND:

LINE TYPES

- SD$_x$ — STORM SEWER LINE
- LIMIT OF GEOGRID
- X — FENCE
- ELECTRICAL CONDUIT
- W$_x$ — WATER LINE

SYMBOLS

- BORING HOLE
- STORM CATCH BASIN
- IRRIGATION CONTROL VALVE
- TELECOMMUNICATION BOX

N

0 10' 20' 40'

SCALE: 1"=20'

BID DOCUMENTS

Revisions	Date

PRIME:

amec foster wheeler

AMEC FOSTER WHEELER
ENVIRONMENT & INFRASTRUCTURE
1075 BIG SHANTY ROAD NW,
SUITE 100
KENNESAW, GA. 30144
(770) 421-3400
AMEC PROJECT: 6166-15-0011

MEP ENGINEER:

GEORGIA REGISTERED No. 15956 PROFESSIONAL ENGINEER JAMES L. STUDER

IRRIGATION DESIGNER:

Irrigation Consultant Services
2231 Weatherstone Circle
Conyers, GA 30094
(770) 929-0884, fax (770) 760-8025

NATIONAL CEMETERY ADMINISTRATION

Drawing Title	Project Title	Date
SITE PLAN	4000 NICHE COLUMBARIUM GEORGIA NATIONAL CEMETERY	23 OCTOBER 2015
		Project No. 922CM3005
Approved: Director, Technical Support Service	Building Number / Checked / Drawn	DRAWING NO. C-101
Approved: Chief, Architectual & Engineering Division	Location: 1080 VETERANS CEMETERY RD, CANTON, GA 30114	Sheet 5 Of 31

NOTE:
1. EXISTING MSE RETAINING WALL TO BE LOWERED TO PROPOSED SPOT ELEVATIONS. APPROXIMATE LENGTH OF WALL TO BE LOWERED IS 120 FT.
2. PROPOSED PRECAST CONCRETE UNDERGROUND STORMWATER VAULT MANUFACTURER SHALL PROVIDE STRUCTURAL SHOP DRAWINGS TO ENGINEER PREPARED BY STRUCTURAL ENGINEER REGISTERED IN THE STATE OF GEORGIA.

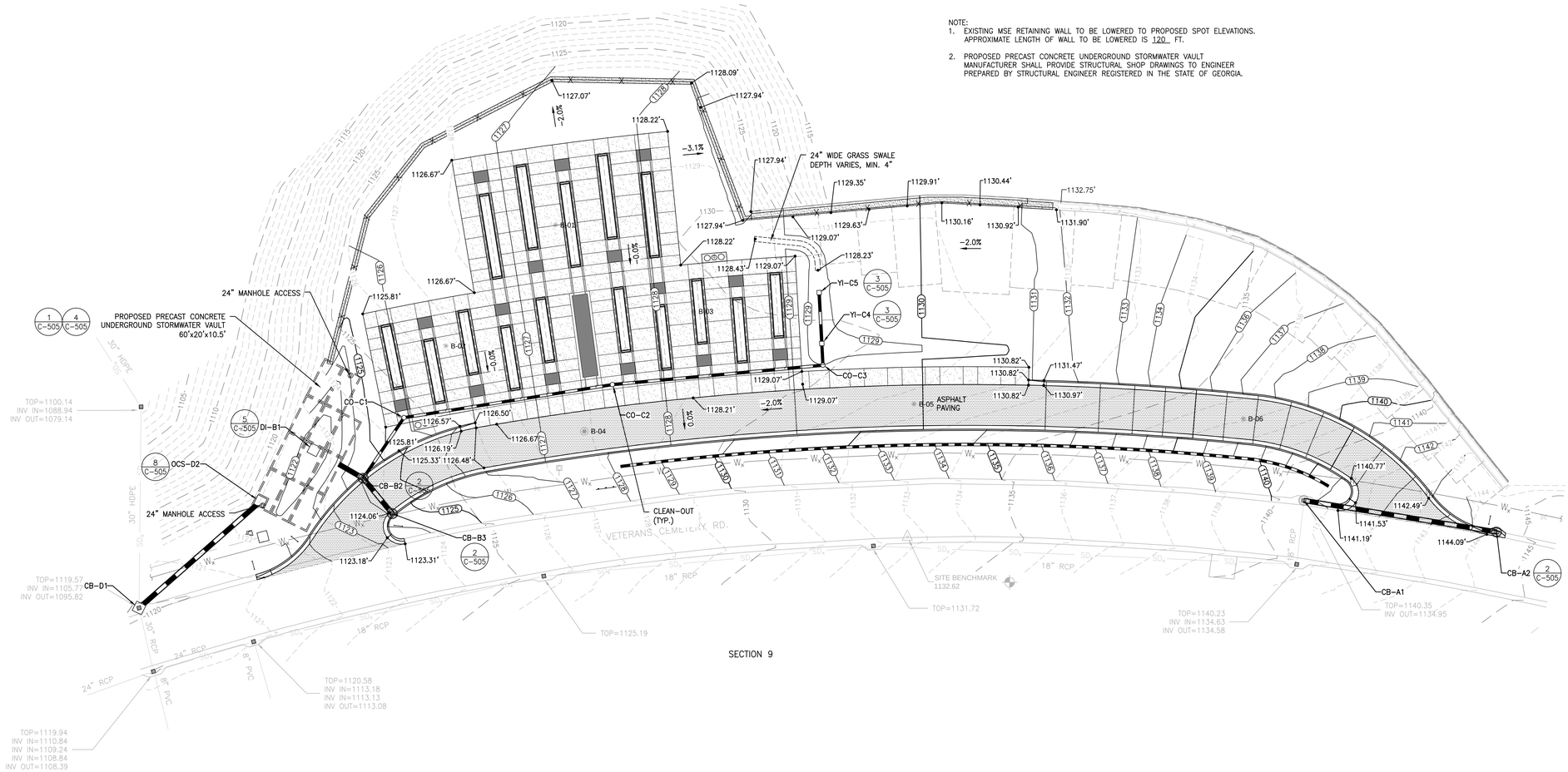

SECTION 9

N

0 10' 20' 40'

SCALE: 1"=20'

BID DOCUMENTS

Revisions	Date

PRIME:

amec foster wheeler

AMEC FOSTER WHEELER
ENVIRONMENT & INFRASTRUCTURE
1075 BIG SHANTY ROAD NW,
SUITE 100
KENNESAW, GA. 30144
(770) 421-3400
AMEC PROJECT: 6166-15-0011

MEP ENGINEER:

GEORGIA REGISTERED No. 15884 PROFESSIONAL ENGINEER JAMES L. STUDER

IRRIGATION DESIGNER:

Irrigation Consultant Services
2231 Weatherstone Circle
Conyers, GA 30094
(770) 929-0884, fax (770) 760-8025

NATIONAL CEMETERY ADMINISTRATION

Drawing Title	Project Title	Date
GRADING AND DRAINAGE PLAN	4000 NICHE COLUMBARIUM GEORGIA NATIONAL CEMETERY	23 OCTOBER 2015
		Project No. 922CM3005
Approved: Director, Technical Support Service	Building Number / Checked / Drawn	DRAWING NO. C-102
Approved: Chief, Architectual & Engineering Division	Location: 1080 VETERANS CEMETERY RD, CANTON, GA 30114	Sheet 6 Of 31

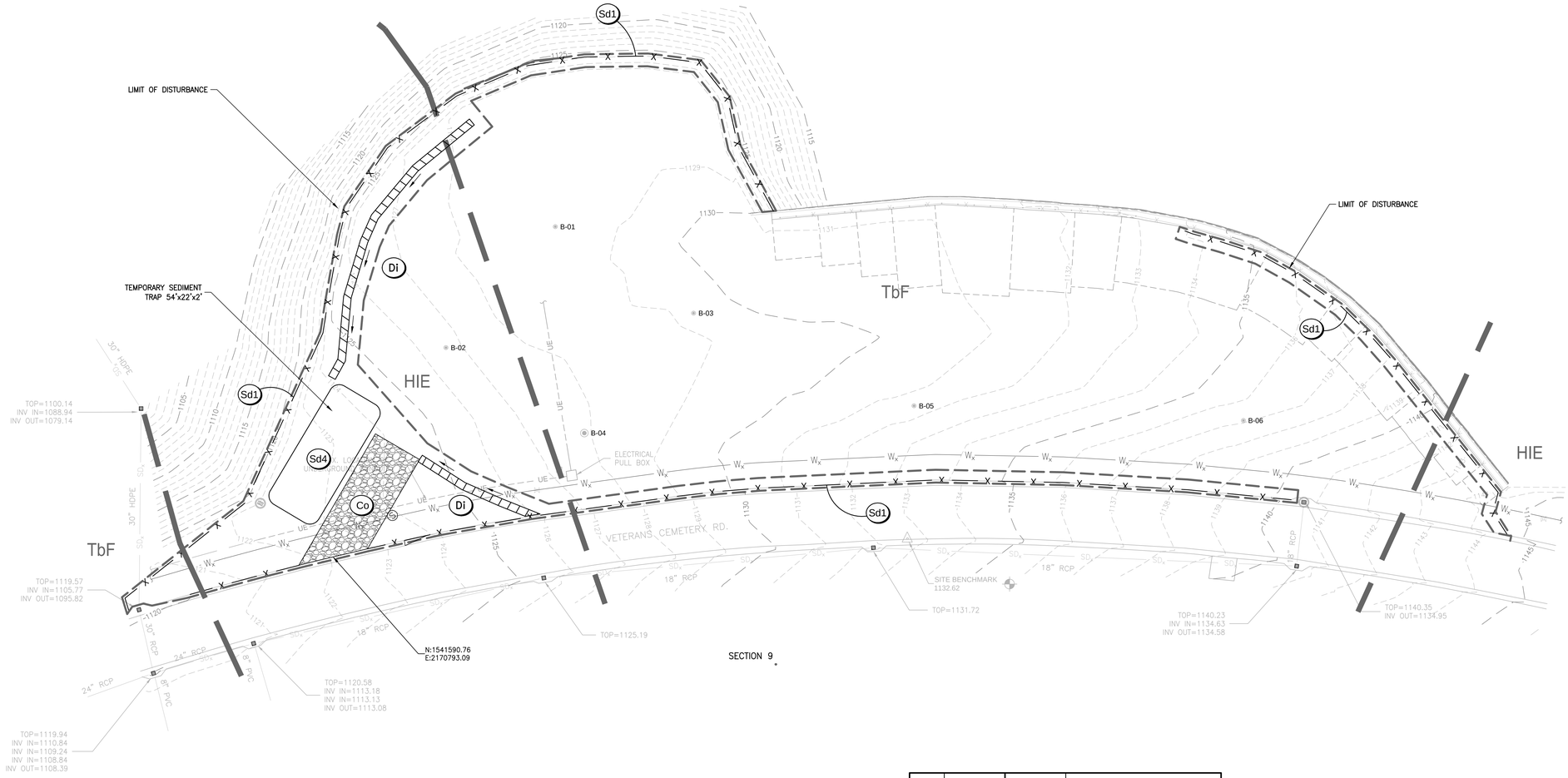

DISTURBED AREA = 0.27 AC

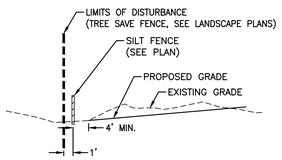

TYPICAL LIMITS OF DISTURBANCE SECTION
(N.T.S.)

GEORGIA811 Utilities Protection Center, Inc
Know what's below. Call before you dig.

GSWCC Georgia Soil and Water Conservation Commission
James L Studer
Level II Certified Design Professional
Certification Number 0000007223
Issued: 03/17/2015 Expires: 03/17/2018

CODE	PRACTICE	MAP SYMBOL	DESCRIPTION
Co	CONSTRUCTION EXIT		A CRUSHED STONE PAD LOCATED AT THE CONSTRUCTION SITE EXIT TO PROVIDE A PLACE FOR REMOVING MUD FROM TIRES THEREBY PROTECTING PUBLIC STREETS.
Di	DIVERSION		AN EARTH CHANNEL OR DIKE LOCATED ABOVE, BELOW OR ACROSS A SLOPE TO DIVERT RUNOFF. THIS MAY BE A TEMPORARY OR PERMANENT STRUCTURE.
Sd1	SEDIMENT BARRIER		A BARRIER TO PREVENT SEDIMENT FROM LEAVING THE CONSTRUCTION SITE. IT MAY BE SANDBAGS, BALES OF STRAW OR HAY, BRUSH, LOGS AND POLES, GRAVEL, OR A SEDIMENT FENCE. THE BARRIERS ARE USUALLY TEMPORARY.
Sd4	TEMPORARY SEDIMENT TRAP		A SMALL TEMPORARY POND THAT DRAINS A DISTURBED AREA SO THAT SEDIMENT CAN SETTLE OUT. THE PRINCIPLE FEATURE DISTIGUISHING A TEMPORARY SEDIMENT TRAP FROM A TEMPORARY SEDIMENT BASIN IS THE LACK OF A PIPE OR RISER.

SOILS LEGEND	
MAP UNIT SYMBOL	MAP UNIT NAME
HIE	HAYESVILLE FINE SANDY LOAM, 10 TO 25 PERCENT SLOPES
TbF	TALLAPOOSA COBBLY SANDY LOAM, 25 TO 60 PERCENT SLOPES

N

0 10' 20' 40'
SCALE: 1"=20'

BID DOCUMENTS

Revisions | Date

PRIME:
amec foster wheeler
AMEC FOSTER WHEELER
ENVIRONMENT & INFRASTRUCTURE
1075 BIG SHANTY ROAD NW,
SUITE 100
KENNESAW, GA. 30144
(770) 421-3400
AMEC PROJECT: 6166-15-0011

MEP ENGINEER:

GEORGIA REGISTERED No. 15995 PROFESSIONAL ENGINEER JAMES L. STUDER

IRRIGATION DESIGNER:
Irrigation Consultant Services
2231 Weatherstone Circle
Conyers, GA 30094
(770) 929-0884, fax (770) 760-8025

NATIONAL CEMETERY ADMINISTRATION

Drawing Title: INITIAL EROSION & SEDIMENT CONTROL PLAN

Project Title: 4000 NICHE COLUMBARIUM GEORGIA NATIONAL CEMETERY

Date: 23 OCTOBER 2015

Project No.: 922CM3005

Approved: Director, Technical Support Service

Building Number | Checked | Drawn

DRAWING NO. C-103

Approved: Chief, Architectual & Engineering Division

Location: 1080 VETERANS CEMETERY RD, CANTON, GA 30114

Sheet 7 Of 31

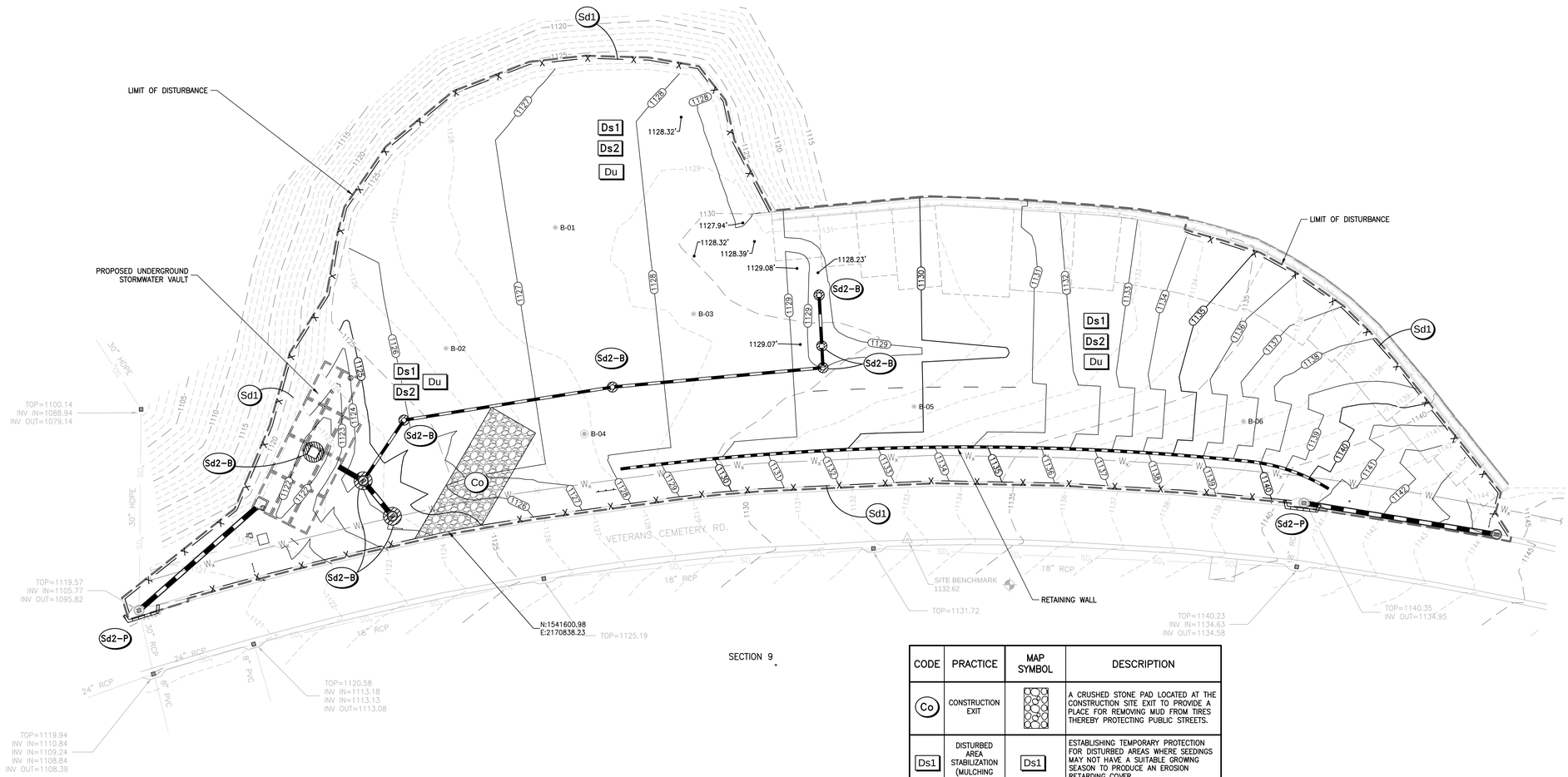

SECTION 9

DISTURBED AREA = 1.36 AC

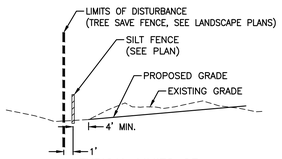

TYPICAL LIMITS OF DISTURBANCE SECTION
(N.T.S.)

GEORGIA811 Utilities Protection Center, Inc
Know what's below. Call before you dig.

GSWCC Georgia Soil and Water Conservation Commission
James L Studer
Level II Certified Design Professional
Certification Number 0000007223
Issued: 03/17/2015 Expires: 03/17/2018

CODE	PRACTICE	MAP SYMBOL	DESCRIPTION
Co	CONSTRUCTION EXIT		A CRUSHED STONE PAD LOCATED AT THE CONSTRUCTION SITE EXIT TO PROVIDE A PLACE FOR REMOVING MUD FROM TIRES THEREBY PROTECTING PUBLIC STREETS.
Ds1	DISTURBED AREA STABILIZATION (MULCHING ONLY)	Ds1	ESTABLISHING TEMPORARY PROTECTION FOR DISTURBED AREAS WHERE SEEDINGS MAY NOT HAVE A SUITABLE GROWING SEASON TO PRODUCE AN EROSION RETARDING COVER.
Ds2	DISTURBED AREA STABILIZATION (WITH TEMPORARY SEEDING)	Ds2	ESTABLISHING A TEMPORARY VEGETATIVE COVER WITH FAST GROWING SEEDINGS ON DISTURBED AREAS.
Du	DUST CONTROL ON DISTURBED AREAS	Du	CONTROLLING SURFACE AND AIR MOVEMENT OF DUST ON CONSTRUCTION SITES, ROADWAYS AND SIMILAR SITES.
Sd1	SEDIMENT BARRIER		A BARRIER TO PREVENT SEDIMENT FROM LEAVING THE CONSTRUCTION SITE. IT MAY BE SANDBAGS, BALES OF STRAW OR HAY, BRUSH, LOGS AND POLES, GRAVEL, OR A SEDIMENT FENCE. THE BARRIERS ARE USUALLY TEMPORARY.
Sd2-B	BUFFLE BOX TEMPORARY INLET PROTECTION		2"x4" BOARDS SPACED A MAXIMUM 1" APART OR PLYWOOD WITH WEEP HOLES 2" DIAM. AT 6" ON CENTER VERTICALLY & HORIZONTALLY. PLACE GRAVEL OUTSIDE BOX TO A DEPTH OF 2" TO 4". WRAP BOX IN FILTER FABRIC & ENTRENCH 12".
Sd2-P	CURB INLET FILTER (PIGS-IN-A-BLANKET)		WRAP 8 INCH CONCRETE BLOCKS OR #4 STONE IN FILTER FABRIC AND SPAN ACROSS CATCH BASIN INLET.

N

0 10' 20' 40'

SCALE: 1"=20'

BID DOCUMENTS

Revisions | Date

PRIME:
amec foster wheeler
AMEC FOSTER WHEELER ENVIRONMENT & INFRASTRUCTURE
1075 BIG SHANTY ROAD NW, SUITE 100
KENNESAW, GA. 30144
(770) 421-3400
AMEC PROJECT: 6166-15-0011

MEP ENGINEER:

GEORGIA REGISTERED PROFESSIONAL ENGINEER No. 15952 JAMES L. STUDER

IRRIGATION DESIGNER:
Irrigation Consultant Services
2231 Weatherstone Circle
Conyers, GA 30094
(770) 929-0884, fax (770) 760-8025

NATIONAL CEMETERY ADMINISTRATION

Drawing Title: INTERMEDIATE EROSION & SEDIMENT CONTROL PLAN

Project Title: 4000 NICHE COLUMBARIUM GEORGIA NATIONAL CEMETERY

Date: 23 OCTOBER 2015

Project No. 922CM3005

Approved: Director, Technical Support Service

Building Number | Checked | Drawn

DRAWING NO. C-104

Approved: Chief, Architectual & Engineering Division

Location: 1080 VETERANS CEMETERY RD, CANTON, GA 30114

Sheet 8 Of 31

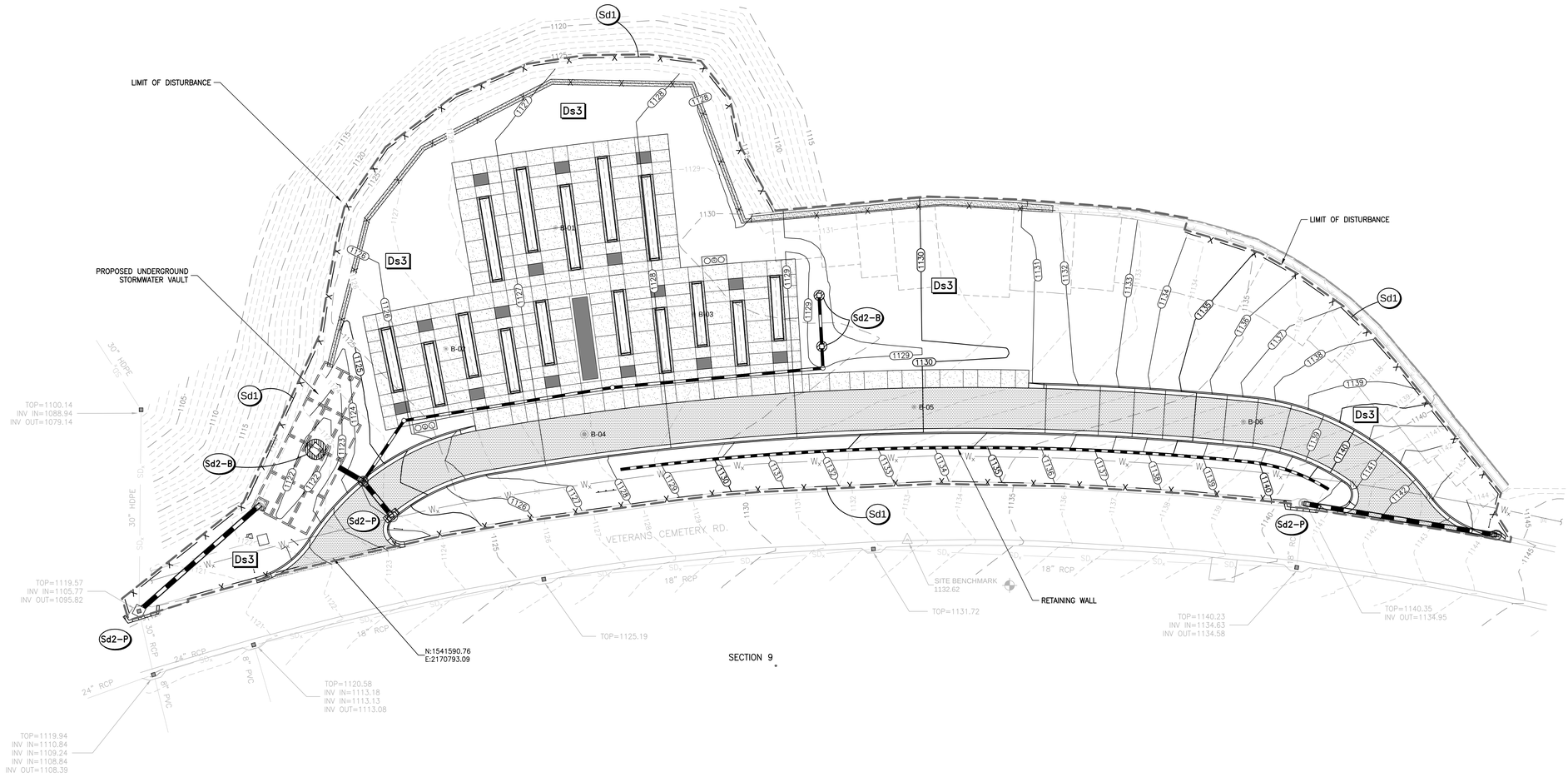

SECTION 9

DISTURBED AREA = 1.35 AC

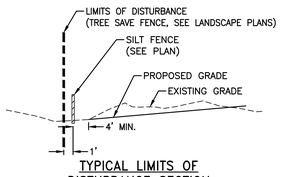

TYPICAL LIMITS OF DISTURBANCE SECTION
(N.T.S.)

GEORGIA811
Utilities Protection Center, Inc
Know what's below.
Call before you dig.

GSWCC Georgia Soil and Water Conservation Commission
James L Studer
Level II Certified Design Professional
Certification Number 0000007223
Issued: 03/17/2015 Expires: 03/17/2018

CODE	PRACTICE	MAP SYMBOL	DESCRIPTION
Ds3	DISTURBED AREA STABILIZATION (WITH PERMANENT VEGETATION)	Ds3	ESTABLISHING PERMANENT VEGETATIVE COVER SUCH AS TREES, SHRUBS, VINES, GRASSES, SOD OR LEGUMES ON DISTURBED AREAS.
Sd1	SEDIMENT BARRIER		A BARRIER TO PREVENT SEDIMENT FROM LEAVING THE CONSTRUCTION SITE. IT MAY BE SANDBAGS, BALES OF STRAW OR HAY, BRUSH, LOGS AND POLES, GRAVEL, OR A SEDIMENT FENCE. THE BARRIERS ARE USUALLY TEMPORARY.
Sd2-B	BUFFLE BOX TEMPORARY INLET PROTECTION		2"x4" BOARDS SPACED A MAXIMUM 1" APART OR PLYWOOD WITH WEEP HOLES 2" DIAM. AT 6" ON CENTER VERTICALLY & HORIZONTALLY. PLACE GRAVEL OUTSIDE BOX TO A DEPTH OF 2" TO 4". WRAP BOX IN FILTER FABRIC & ENTRENCH 12".
Sd2-P	CURB INLET FILTER (PIGS-IN-A-BLANKET)		WRAP 8 INCH CONCRETE BLOCKS OR #4 STONE IN FILTER FABRIC AND SPAN ACROSS CATCH BASIN INLET.

N

0 10' 20' 40'

SCALE: 1"=20'

BID DOCUMENTS

Revisions | Date

PRIME:

amec foster wheeler

AMEC FOSTER WHEELER
ENVIRONMENT & INFRASTRUCTURE
1075 BIG SHANTY ROAD NW,
SUITE 100
KENNESAW, GA. 30144
(770) 421-3400
AMEC PROJECT: 6166-15-0011

MEP ENGINEER:

GEORGIA REGISTERED No. 15552 PROFESSIONAL ENGINEER JAMES L. STUDER

IRRIGATION DESIGNER:

Irrigation Consultant Services
2231 Weatherstone Circle
Conyers, GA 30094
(770) 929-0884, fax (770) 760-8025

NATIONAL CEMETERY ADMINISTRATION

Drawing Title: FINAL EROSION & SEDIMENT CONTROL PLAN

Project Title: 4000 NICHE COLUMBARIUM GEORGIA NATIONAL CEMETERY

Date: 23 OCTOBER 2015

Project No.: 922CM3005

Approved: Director, Technical Support Service

Building Number | Checked | Drawn

Approved: Chief, Architectual & Engineering Division

Location: 1080 VETERANS CEMETERY RD, CANTON, GA 30114

DRAWING NO. C-105

Sheet 9 Of 31

BID DOCUMENTS

Revisions	Date

PRIME:

AMEC FOSTER WHEELER
ENVIRONMENT & INFRASTRUCTURE
1075 BIG SHANTY ROAD NW,
SUITE 100
KENNESAW, GA. 30144
(770) 421-3400
AMEC PROJECT: 6166-15-0011

MEP ENGINEER:

GEORGIA REGISTERED No. 15884 PROFESSIONAL ENGINEER JAMES L. STUDER

IRRIGATION DESIGNER:

Irrigation Consultant Services
2231 Weatherstone Circle
Conyers, GA 30094
(770) 929-0884, fax (770) 760-8025

NATIONAL CEMETERY ADMINISTRATION

Drawing Title	Project Title	Date
COLUMBARIUM LAYOUT ENLARGEMENT	4000 NICHE COLUMBARIUM GEORGIA NATIONAL CEMETERY	23 OCTOBER 2015
		Project No. 922CM3005
Approved: Director, Technical Support Service	Building Number / Checked / Drawn	DRAWING NO. C-201
Approved: Chief, Architectual & Engineering Division	Location: 1080 VETERANS CEMETERY RD, CANTON, GA 30114	Sheet 10 Of 31

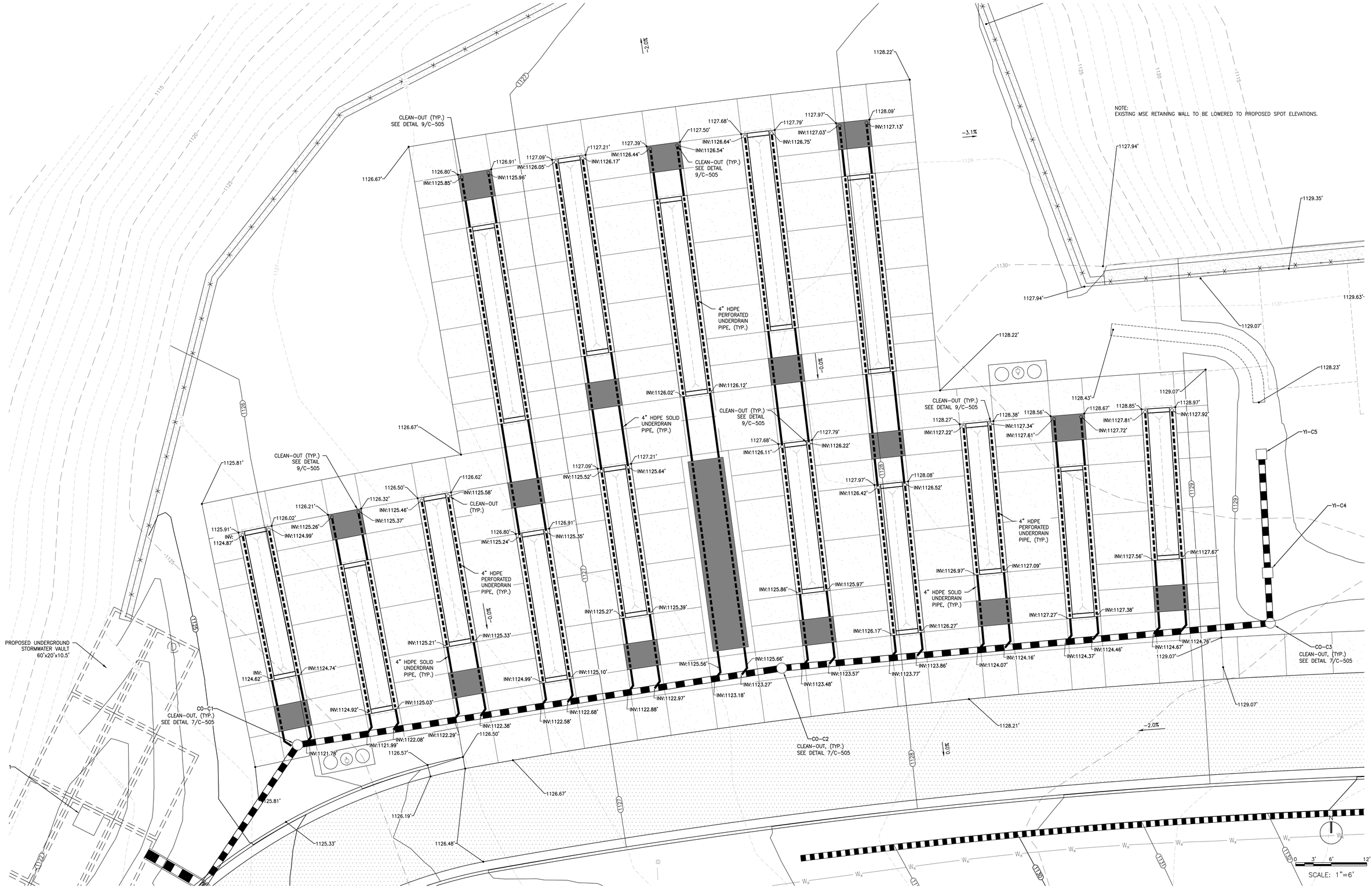

BID DOCUMENTS

Revisions	Date

PRIME:

amec foster wheeler

AMEC FOSTER WHEELER
ENVIRONMENT & INFRASTRUCTURE
1075 BIG SHANTY ROAD NW,
SUITE 100
KENNESAW, GA. 30144
(770) 421-3400
AMEC PROJECT: 6166-15-0011

MEP ENGINEER:

GEORGIA REGISTERED PROFESSIONAL ENGINEER No. 19856 JAMES L. STUDER

IRRIGATION DESIGNER:

Irrigation Consultant Services
2231 Weatherstone Circle
Conyers, GA 30094
(770) 929-0884, fax (770) 760-8025

NATIONAL CEMETERY ADMINISTRATION

Drawing Title	Project Title	Date
COLUMBARIUM STORM ENLARGEMENT	4000 NICHE COLUMBARIUM GEORGIA NATIONAL CEMETERY	23 OCTOBER 2015
		Project No. 922CM3005
Approved: Director, Technical Support Service	Building Number / Checked / Drawn	DRAWING NO. C-202
Approved: Chief, Architectual & Engineering Division	Location: 1080 VETERANS CEMETERY RD, CANTON, GA 30114	Sheet 11 Of 31

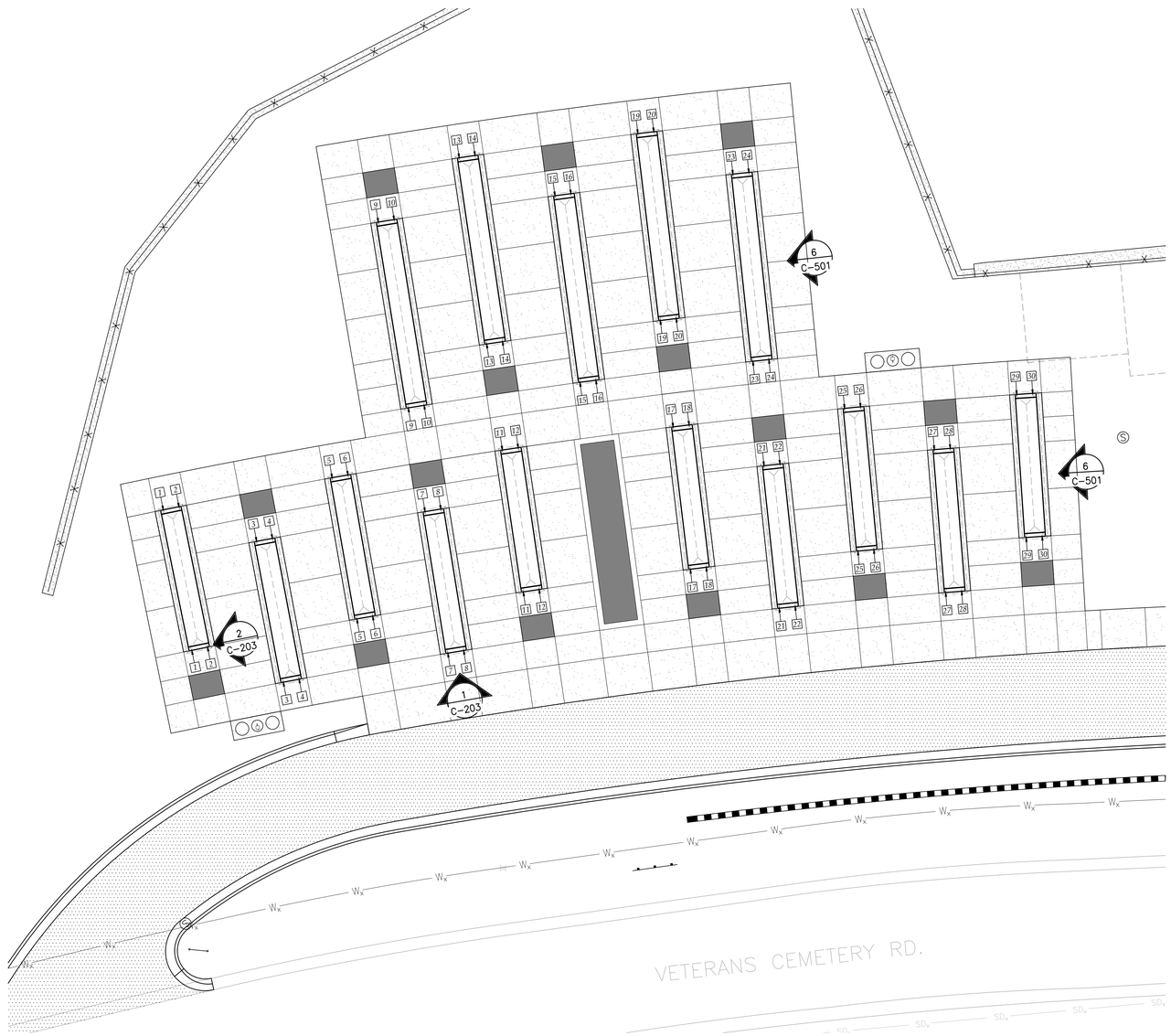

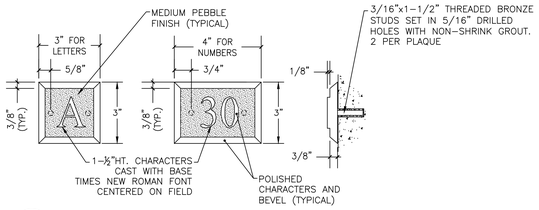

5 BRONZE NICHE IDENTIFICATION PLAQUES
N.T.S.

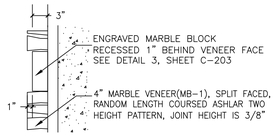

4 MARBLE WALL NUMBERING DETAIL
1"=1'0"

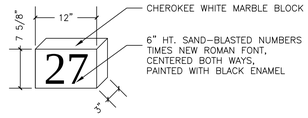

3 MARBLE IDENTIFICATION BLOCK DETAIL
1" = 1'-0"

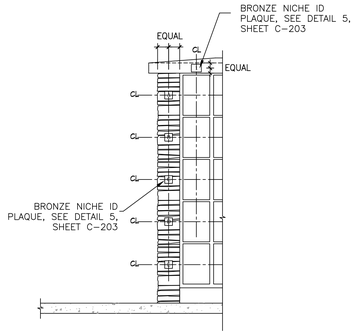

2 NICHE ROW LETTER PLAQUE LOCATION
3/4"=1'-0

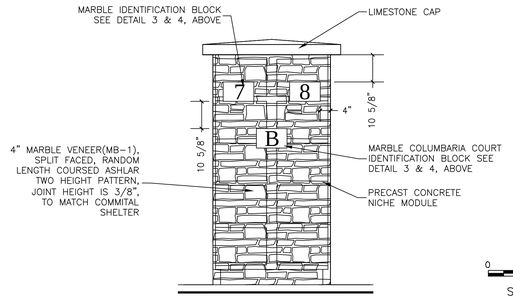

N

0 10' 20' 40'
SCALE: 1"=20'

1 COLUMBARIA IDENTIFICATION BLOCK LOCATION
1/2" = 1'-0"

BID DOCUMENTS

Revisions	Date

PRIME:
amec foster wheeler
AMEC FOSTER WHEELER
ENVIRONMENT & INFRASTRUCTURE
1075 BIG SHANTY ROAD NW,
SUITE 100
KENNESAW, GA. 30144
(770) 421-3400
AMEC PROJECT: 6166-15-0011

MEP ENGINEER:

GEORGIA REGISTERED No. 15952 PROFESSIONAL ENGINEER JAMES L. STUDER

IRRIGATION DESIGNER:
Irrigation Consultant Services
2231 Weatherstone Circle
Conyers, GA 30094
(770) 929-0884, fax (770) 760-8025

NATIONAL CEMETERY ADMINISTRATION

Drawing Title	Project Title	Date
COLUMBARIUM IDENTIFICATION PLAN	4000 NICHE COLUMBARIUM GEORGIA NATIONAL CEMETERY	23 OCTOBER 2015
		Project No. 922CM3005
Approved: Director, Technical Support Service	Building Number / Checked / Drawn	DRAWING NO. C-203
Approved: Chief, Architectual & Engineering Division	Location: 1080 VETERANS CEMETERY RD, CANTON, GA 30114	Sheet 12 Of 31

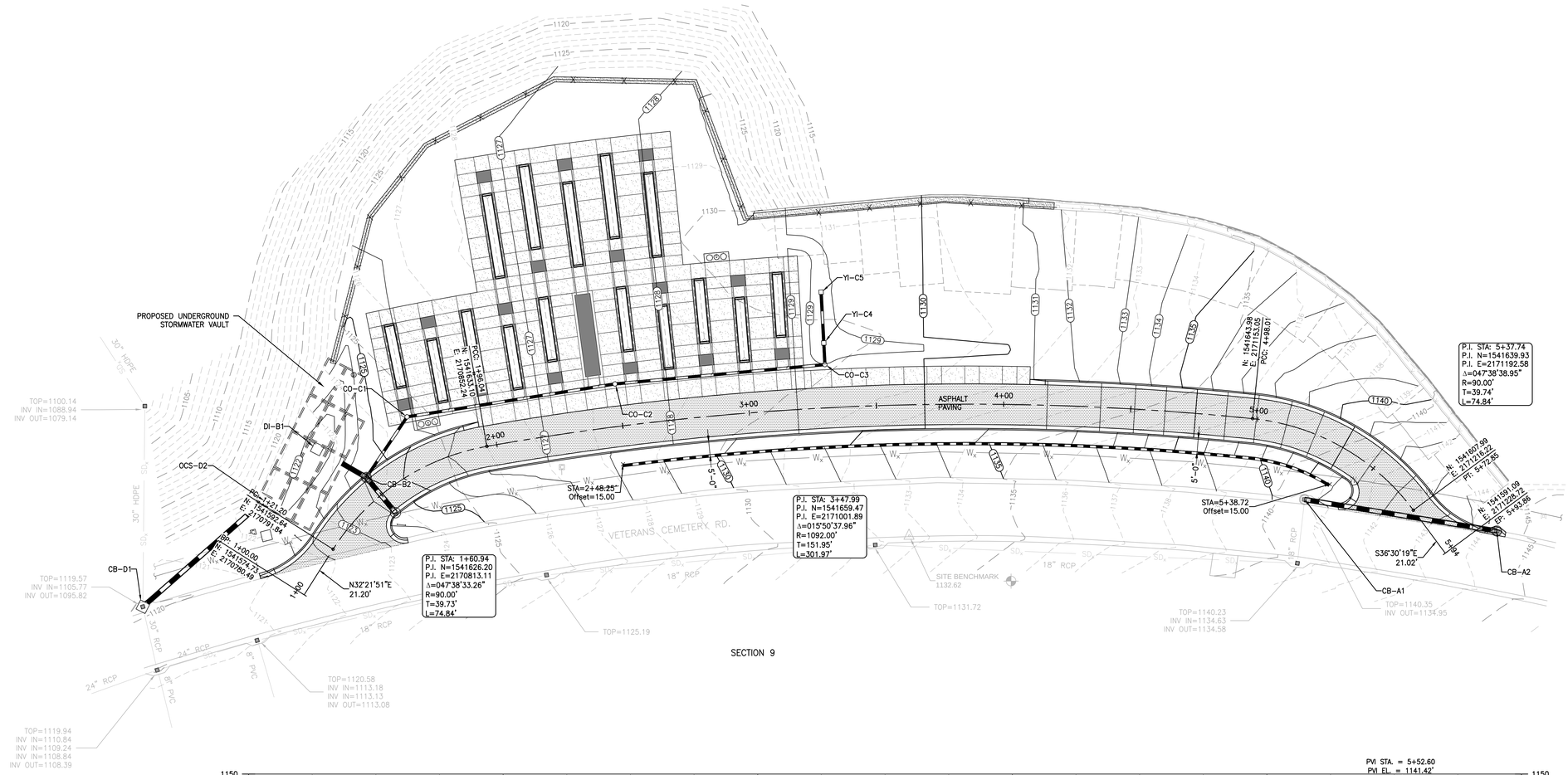

SECTION 9

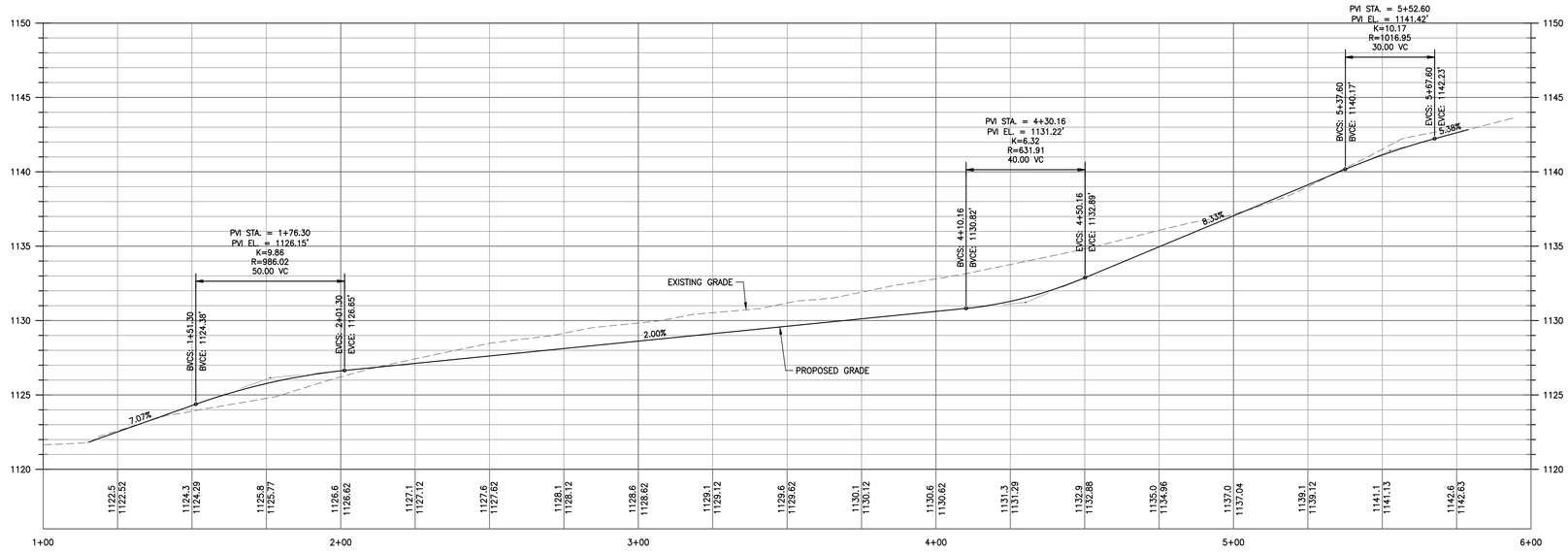

BID DOCUMENTS

Revisions	Date

PRIME:

amec foster wheeler

AMEC FOSTER WHEELER
ENVIRONMENT & INFRASTRUCTURE
1075 BIG SHANTY ROAD NW,
SUITE 100
KENNESAW, GA. 30144
(770) 421-3400
AMEC PROJECT: 6166-15-0011

MEP ENGINEER:

GEORGIA REGISTERED PROFESSIONAL ENGINEER No. 15956 JAMES L. STUDER

IRRIGATION DESIGNER:

Irrigation Consultant Services
2231 Weatherstone Circle
Conyers, GA 30094
(770) 929-0884, fax (770) 760-8025

NATIONAL CEMETERY ADMINISTRATION

Drawing Title: ROADWAY PLAN AND PROFILE

Project Title: 4000 NICHE COLUMBARIUM GEORGIA NATIONAL CEMETERY

Date: 23 OCTOBER 2015

Project No. 922CM3005

Approved: Director, Technical Support Service

Building Number | Checked | Drawn

Approved: Chief, Architectual & Engineering Division

Location: 1080 VETERANS CEMETERY RD, CANTON, GA 30114

DRAWING NO. C-211

Sheet 13 Of 31

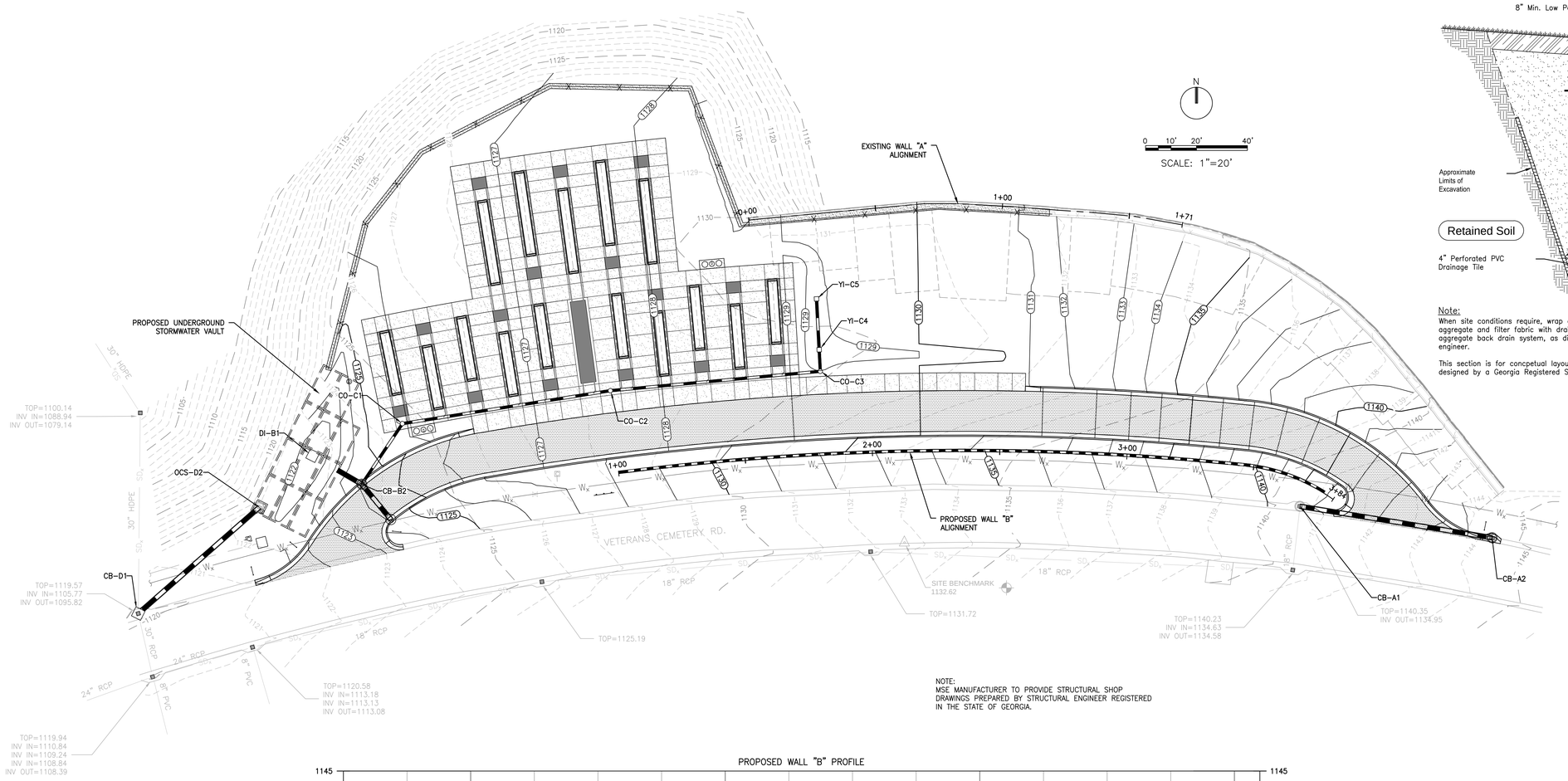

NOTE:
MSE MANUFACTURER TO PROVIDE STRUCTURAL SHOP DRAWINGS PREPARED BY STRUCTURAL ENGINEER REGISTERED IN THE STATE OF GEORGIA.

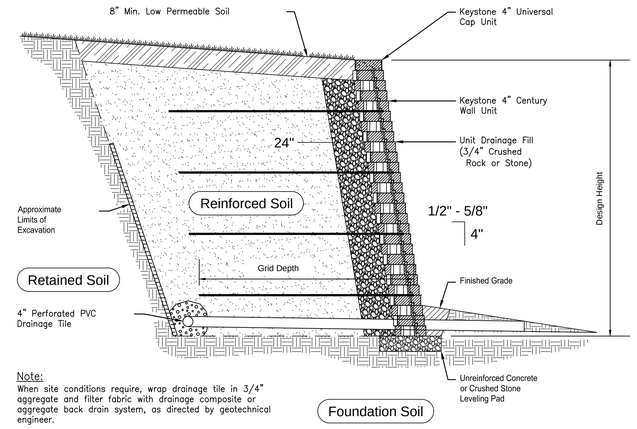

Note:
When site conditions require, wrap drainage tile in 3/4" aggregate and filter fabric with drainage composite or aggregate back drain system, as directed by geotechnical engineer.

This section is for concpetual layout of wall. Wall to be designed by a Georgia Registered Structural Engineer

Typical Section

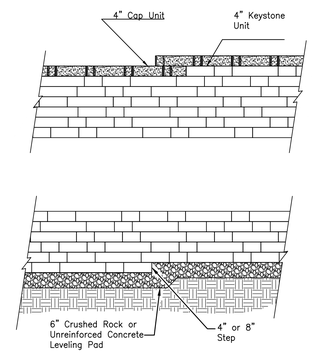

Typical Elevation

Note:
1. The leveling pad is to be constructed of crushed stone or 2000 psi ± unreinforced concrete.
2. Secure all cap units with Keystone Kapseal or equal.
3. These elevations for concpetual layout of wall. Wall to be designed by a Georgia Registered Structural Engineer

1 PROPOSED WALL "B" ELEVATION

N/A

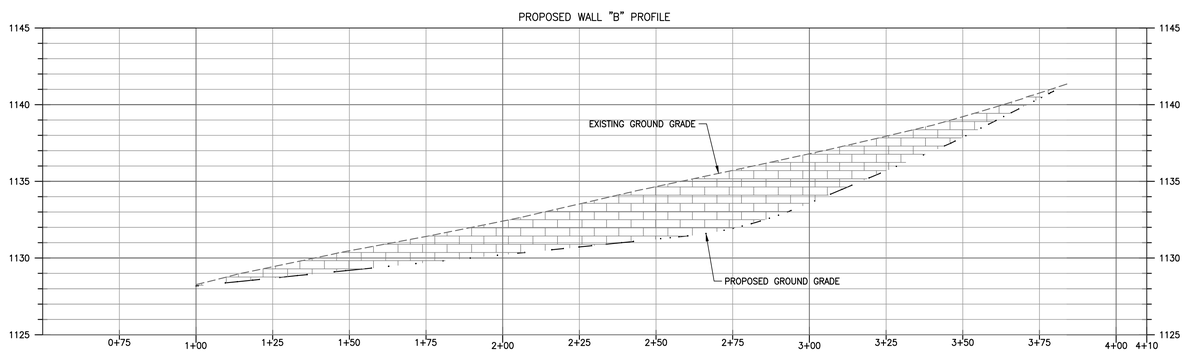

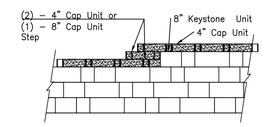

Note:
1. Secure all cap units with Keystone Kapseal or equal.

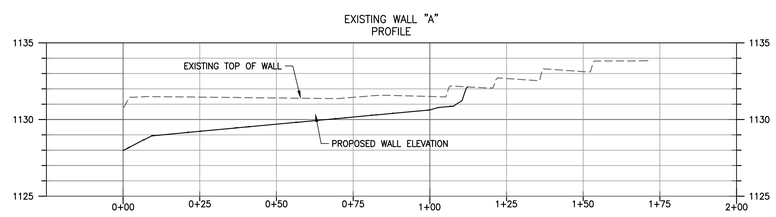

0 2' 4' 8'
VERTICAL SCALE: 1"=4'

0 10' 20' 40'
HORIZONTAL SCALE: 1"=20'

2 EXISTING WALL "A" CAP REINSTALLATION

N/A

BID DOCUMENTS

Revisions	Date

PRIME:
amec foster wheeler
AMEC FOSTER WHEELER
ENVIRONMENT & INFRASTRUCTURE
1075 BIG SHANTY ROAD NW,
SUITE 100
KENNESAW, GA. 30144
(770) 421-3400
AMEC PROJECT: 6166-15-0011

MEP ENGINEER:

GEORGIA REGISTERED No. 13856 PROFESSIONAL ENGINEER JAMES L. STUDER

IRRIGATION DESIGNER:
Irrigation Consultant Services
2231 Weatherstone Circle
Conyers, GA 30094
(770) 929-0884, fax (770) 760-8025

NATIONAL CEMETERY ADMINISTRATION

Drawing Title: WALLS PLAN AND PROFILES

Project Title: 4000 NICHE COLUMBARIUM GEORGIA NATIONAL CEMETERY

Date: 23 OCTOBER 2015

Project No. 922CM3005

Approved: Director, Technical Support Service

Building Number | Checked | Drawn

Approved: Chief, Architectual & Engineering Division

Location: 1080 VETERANS CEMETERY RD, CANTON, GA 30114

DRAWING NO. C-212

Sheet 14 Of 31

STORM A1–A2 PROFILE

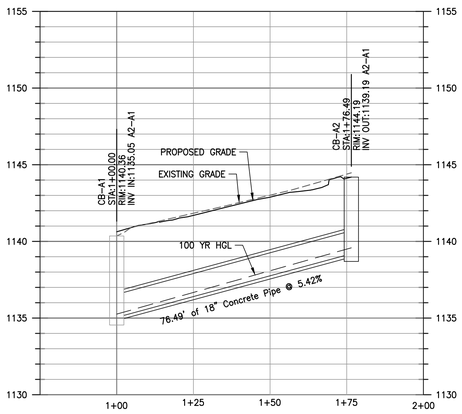

STORM B1–B3 PROFILE

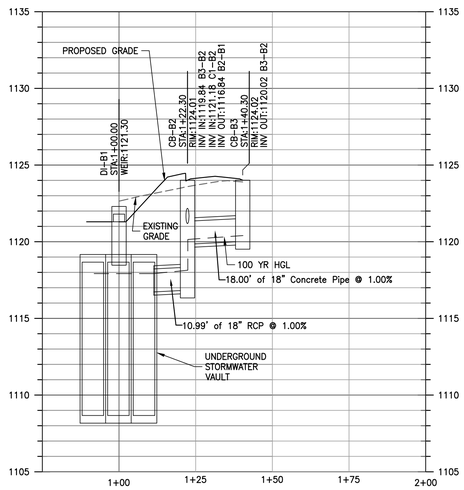

STORM D1–D2 PROFILE

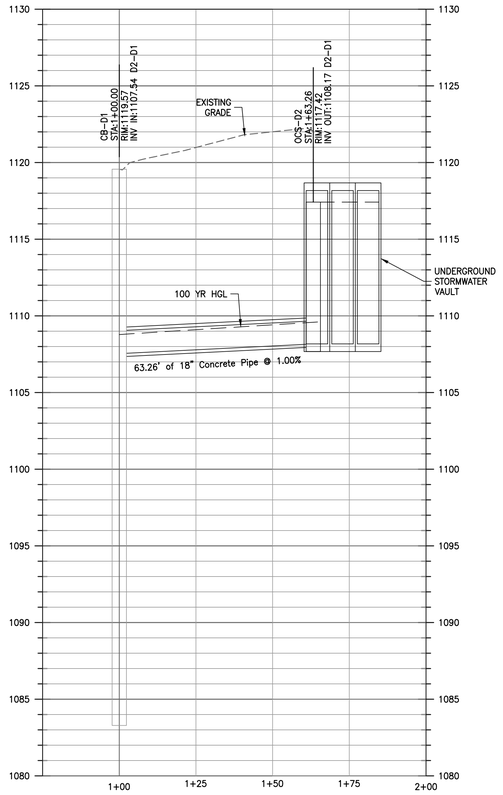

STORM B2–C4 PROFILE

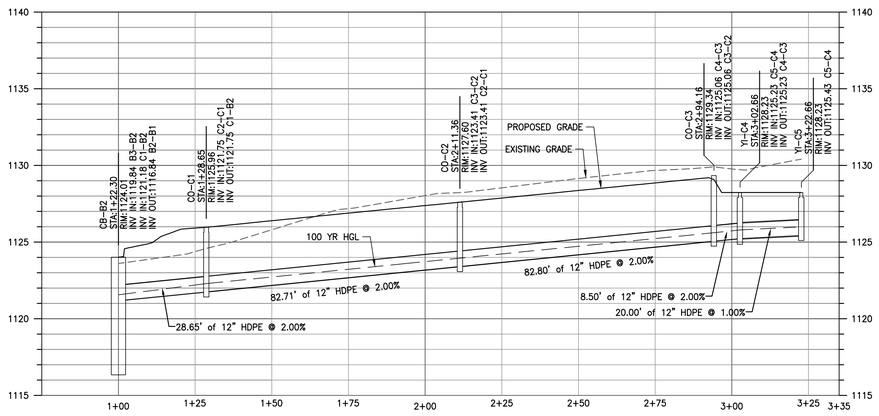

Storm Sewer Tabulation

Page 1

Station Line	Station To Line	Length (ft)	Drng Area Incr (ac)	Drng Area Total (ac)	Rnoff coeff (C)	Area x C Incr	Area x C Total	Tc Inlet (min)	Tc Syst (min)	Rain (I) (in/hr)	Total flow (cfs)	Cap full (cfs)	Vel (ft/s)	Pipe Size (in)	Pipe Slope (%)	Invert Elev Dn (ft)	Invert Elev Up (ft)	HGL Elev Dn (ft)	HGL Elev Up (ft)	Grnd / Rim Elev Dn (ft)	Grnd / Rim Elev Up (ft)	Line ID
8	End	64.661	0.00	0.00	0.72	0.00	0.00	5.0	5.0	0.0	5.81	11.41	5.77	18	1.01	1108.02	1108.67	1108.78	1109.60	1119.57	1118.42	D2-D1
7	2	18.000	0.13	0.13	0.81	0.11	0.11	5.0	5.0	9.8	1.04	11.38	3.48	18	1.00	1119.84	1120.02	1120.15	1120.40	1124.01	1124.02	B3-B2
6	5	8.504	0.34	0.34	0.51	0.17	0.17	5.0	5.0	9.8	1.71	5.45	3.82	12	2.00	1125.06	1125.23	1125.61	1125.79	1129.34	1128.23	C4-C3
5	4	99.955	0.00	0.34	0.00	0.00	0.17	0.0	5.1	9.8	1.70	5.46	3.84	12	2.00	1123.06	1125.06	1123.61	1125.61	1127.27	1129.34	C3-C2
4	3	65.604	0.00	0.34	0.00	0.00	0.17	0.0	5.8	9.5	1.66	5.45	3.79	12	2.00	1121.75	1123.06	1122.29	1123.61	1125.96	1127.27	C2-C1
3	2	28.648	0.00	0.34	0.00	0.00	0.17	0.0	6.3	9.4	1.63	5.44	4.90	12	1.99	1121.18	1121.75	1121.56	1122.29	1124.01	1125.96	C1-B2
2	End	11.056	0.17	0.64	0.84	0.14	0.42	5.0	6.6	9.3	3.92	16.41	3.39	18	2.08	1116.61	1116.84	1117.92	1117.60	0.00	1124.01	B2-B1
1	End	76.488	0.16	0.16	0.73	0.12	0.12	5.0	5.0	9.8	1.15	26.47	5.25	18	5.41	1135.05	1139.19	1135.26	1139.59	1140.36	1144.19	A2-A1

Project File: GA National pipe network.stm | Number of lines: 8 | Run Date: 7/15/2015

NOTES:Intensity = 127.16 / (Inlet time + 17.80) ^ 0.82; Return period =Yrs. 100 ; c = cir e = ellip b = box

Storm Sewers v10.00

VERTICAL SCALE: 1"=4'

HORIZONTAL SCALE: 1"=20'

BID DOCUMENTS

Revisions | Date

PRIME:

amec foster wheeler

AMEC FOSTER WHEELER
ENVIRONMENT & INFRASTRUCTURE
1075 BIG SHANTY ROAD NW,
SUITE 100
KENNESAW, GA. 30144
(770) 421–3400
AMEC PROJECT: 6166–15–0011

MEP ENGINEER:

GEORGIA REGISTERED PROFESSIONAL ENGINEER No. 19856 JAMES L. STUDER

IRRIGATION DESIGNER:

Irrigation Consultant Services
2231 Weatherstone Circle
Conyers, GA 30094
(770) 929-0884, fax (770) 760-8025

NATIONAL CEMETERY ADMINISTRATION

Drawing Title: STORM SEWER PROFILES

Project Title: 4000 NICHE COLUMBARIUM GEORGIA NATIONAL CEMETERY

Date: 23 OCTOBER 2015

Project No. 922CM3005

Approved: Director, Technical Support Service

Building Number | Checked | Drawn

DRAWING NO. C-213

Approved: Chief, Architectual & Engineering Division

Location: 1080 VETERANS CEMETERY RD, CANTON, GA 30114

Sheet 15 Of 31

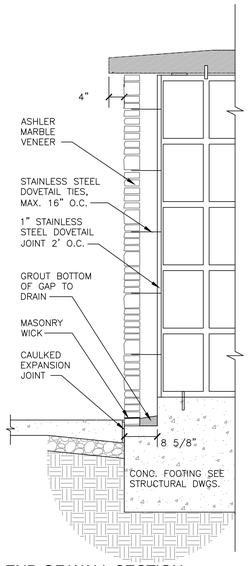

8 END OF WALL SECTION
1

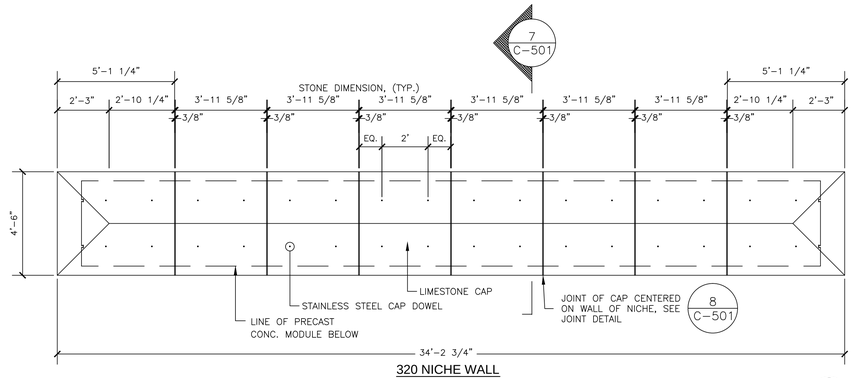

320 NICHE WALL

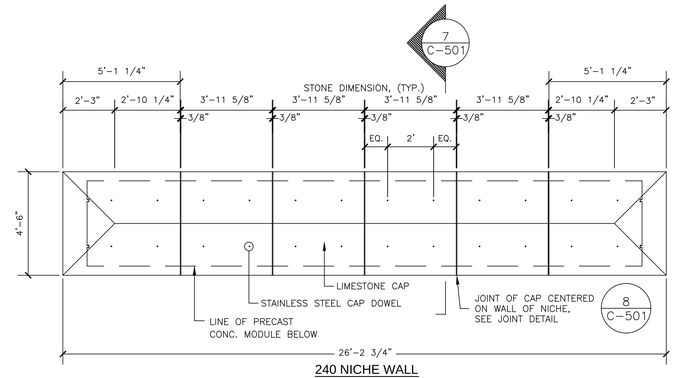

240 NICHE WALL

4 COLUMBARIA CAP JOINT DETAIL
3/8"=1'-0"

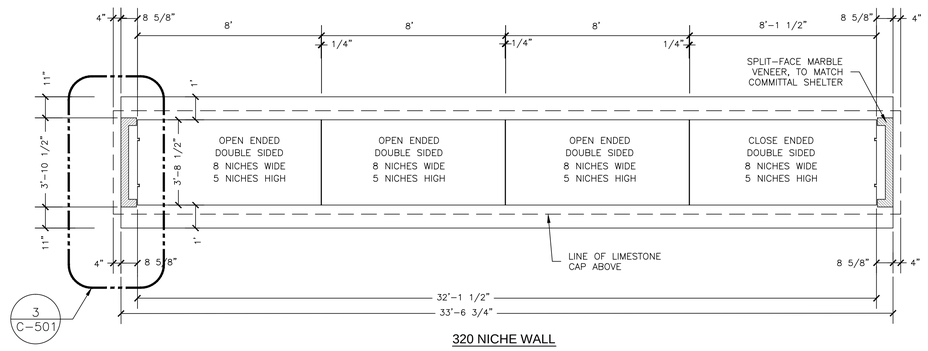

320 NICHE WALL

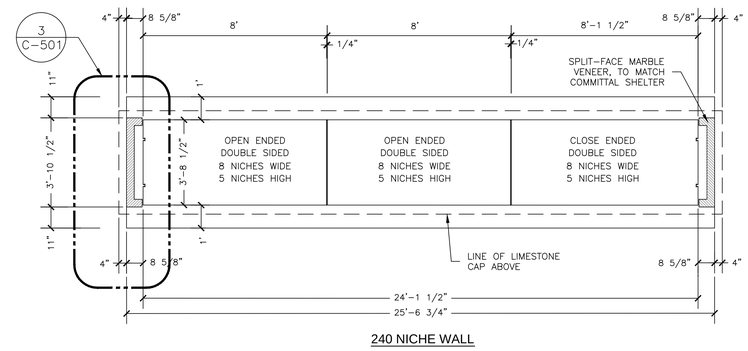

240 NICHE WALL

5 NICHE UNIT LAYOUT DETAIL
3/8"=1'-0"

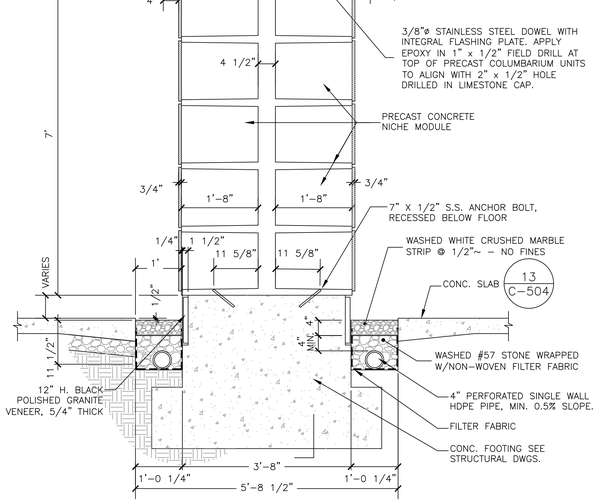

2 SECTION THRU FREE-STANDING COLUMBARIA
3/4"=1'-0"

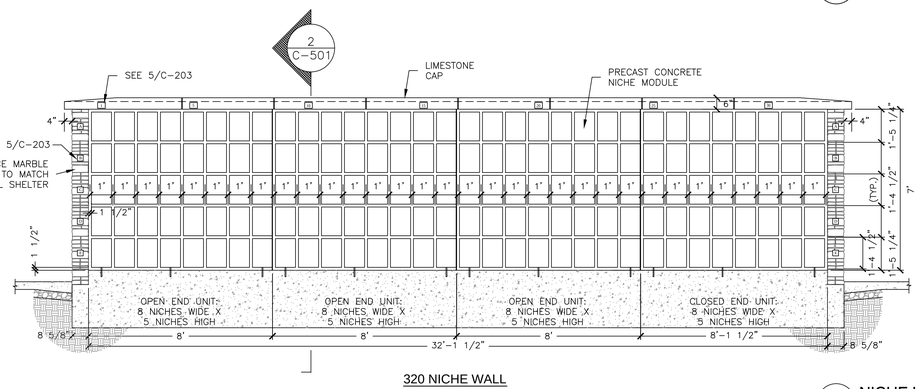

320 NICHE WALL

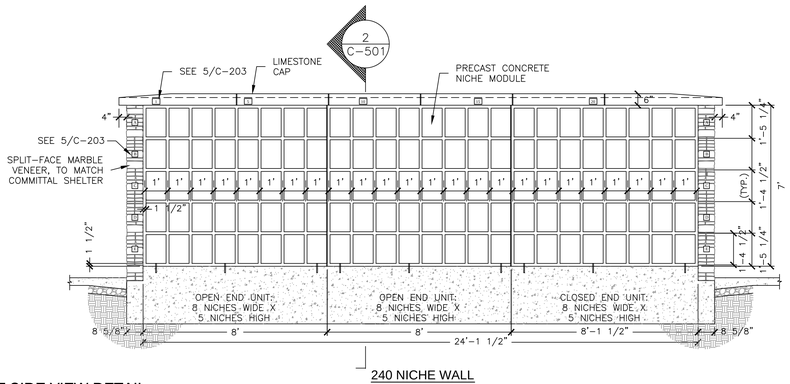

240 NICHE WALL

6 NICHE UNIT SIDE VIEW DETAIL
3/8"=1'-0"

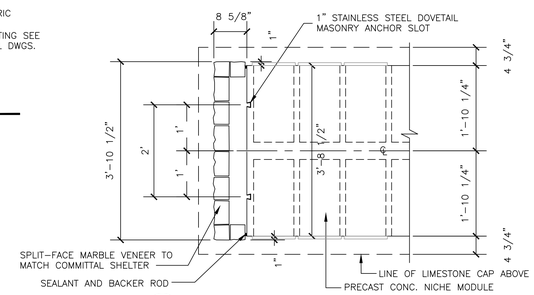

3 END - FREE-STANDING NICHE
3/4" = 1'-0"

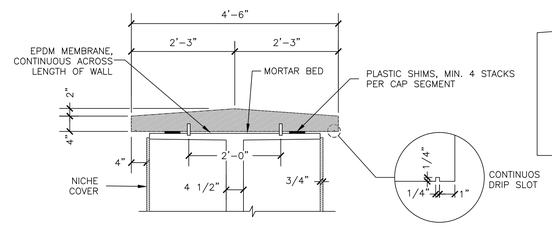

7 SECTION- FREE STANDING COLUMBARIA CAP
3/4" = 1'-0"

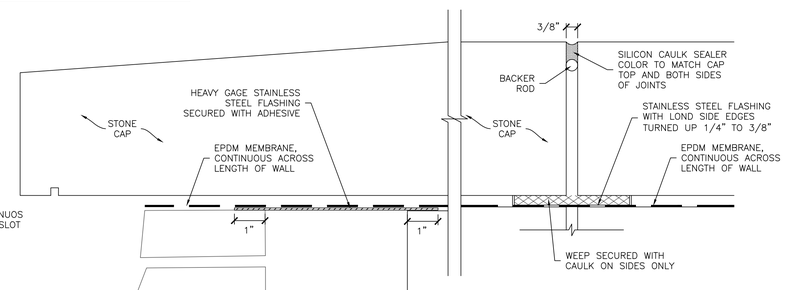

8 LIMESTONE CAP JOINT DETAIL
NOT TO SCALE

BID DOCUMENTS

Revisions	Date

PRIME:
amec foster wheeler
AMEC FOSTER WHEELER
ENVIRONMENT & INFRASTRUCTURE
1075 BIG SHANTY ROAD NW,
SUITE 100
KENNESAW, GA. 30144
(770) 421-3400
AMEC PROJECT: 6166-15-0011

MEP ENGINEER:

GEORGIA REGISTERED PROFESSIONAL ENGINEER No. 19864 JAMES L. STUDER

IRRIGATION DESIGNER:
Irrigation Consultant Services
2231 Weatherstone Circle
Conyers, GA 30094
(770) 929-0884, fax (770) 760-8025

NATIONAL CEMETERY ADMINISTRATION

Drawing Title	Project Title			Date
DETAILS 1	4000 NICHE COLUMBARIUM GEORGIA NATIONAL CEMETERY			23 OCTOBER 2015
				Project No. 922CM3005
Approved: Director, Technical Support Service	Building Number	Checked	Drawn	DRAWING NO. C-501
Approved: Chief, Architectual & Engineering Division	Location 1080 VETERANS CEMETERY RD, CANTON, GA 30114			Sheet 16 Of 31

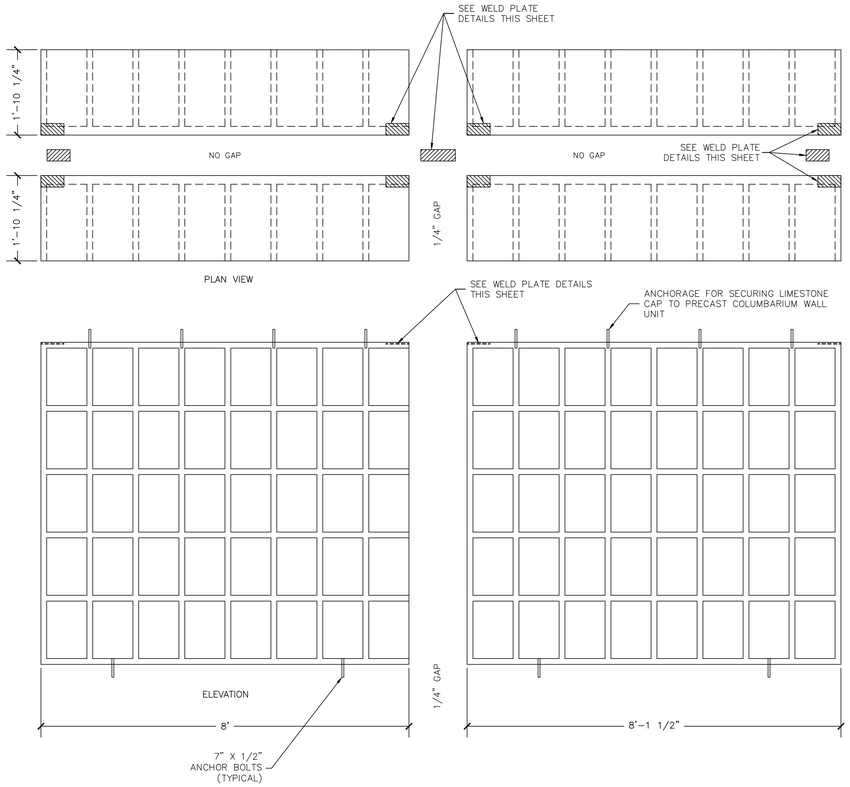

1 ANCHORAGE LOCATION
3/4" = 1'-0"

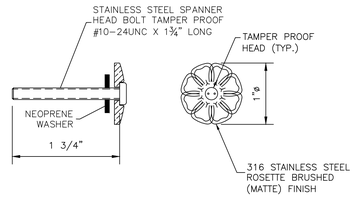

3 ROSETTE ASSEMBLY
NOT TO SCALE

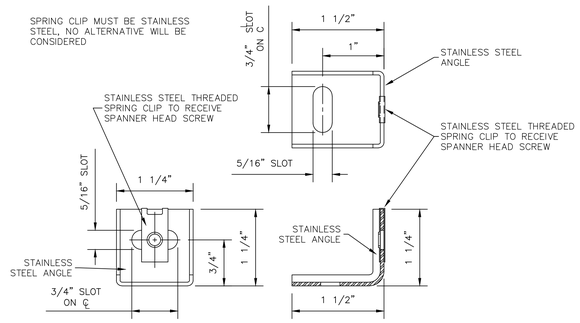

4 STAINLESS STEEL ANGLE
NOT TO SCALE

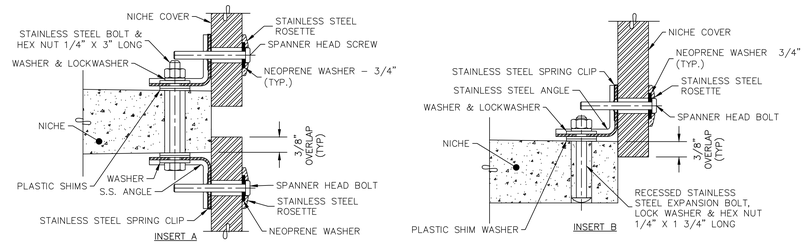

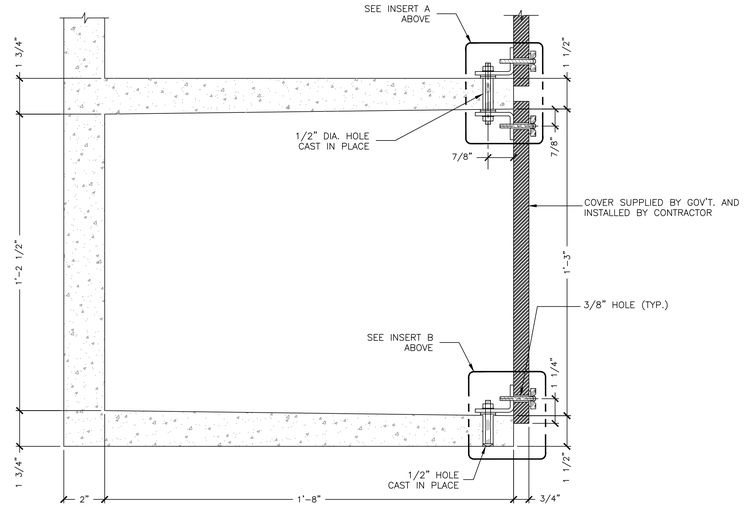

6 NICHE SECTION
4" = 1'-0"

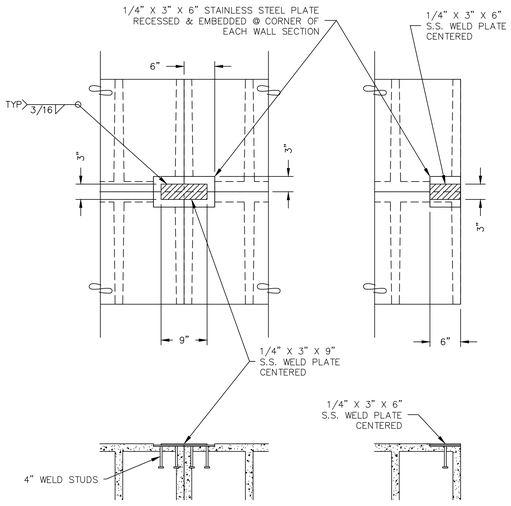

2 WELD PLATE DETAIL
1" = 1'-0"

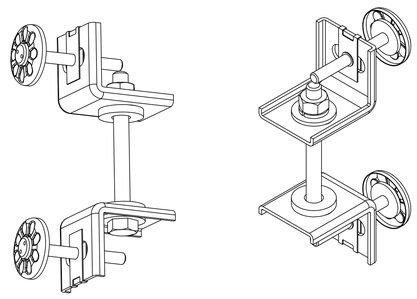

5 FASTENING ASSEMBLY
NOT TO SCALE

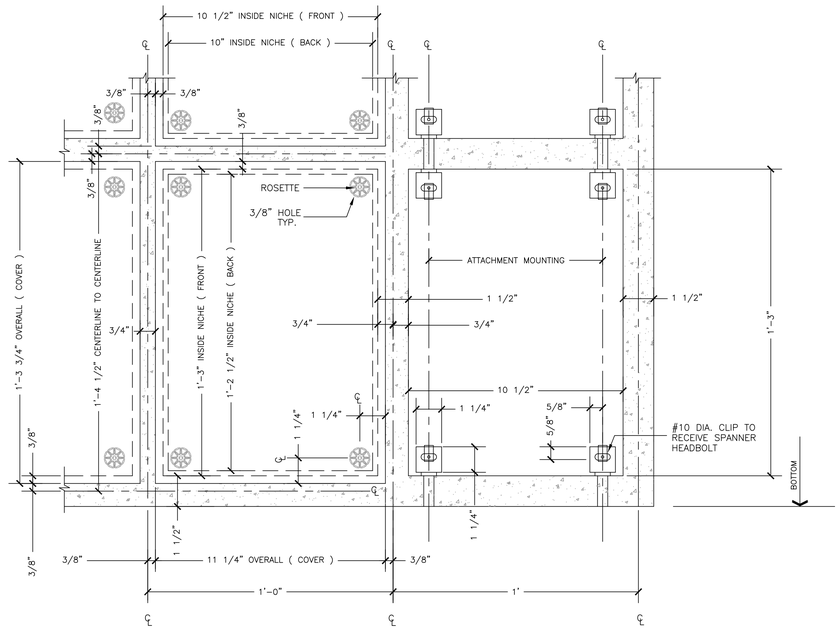

7 NICHE FACE PLATE ELEVATION
4" = 1'-0"

BID DOCUMENTS

Revisions	Date

PRIME:

amec foster wheeler

AMEC FOSTER WHEELER
ENVIRONMENT & INFRASTRUCTURE
1075 BIG SHANTY ROAD NW,
SUITE 100
KENNESAW, GA. 30144
(770) 421-3400
AMEC PROJECT: 6166-15-0011

MEP ENGINEER:

GEORGIA REGISTERED PROFESSIONAL ENGINEER No. 15884 JAMES L. STUDER

IRRIGATION DESIGNER:

Irrigation Consultant Services
2231 Weatherstone Circle
Conyers, GA 30094
(770) 929-0884, fax (770) 760-8025

NATIONAL CEMETERY ADMINISTRATION

Drawing Title: DETAILS 2	Project Title: 4000 NICHE COLUMBARIUM GEORGIA NATIONAL CEMETERY			Date: 23 OCTOBER 2015
				Project No.: 922CM3005
Approved: Director, Technical Support Service	Building Number	Checked	Drawn	DRAWING NO.: C-502
Approved: Chief, Architectual & Engineering Division	Location: 1080 VETERANS CEMETERY RD, CANTON, GA 30114			Sheet 17 Of 31

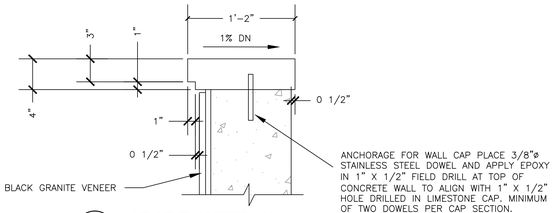

1 CAP AT PLANTER WALL
1 1/2"=1'0"

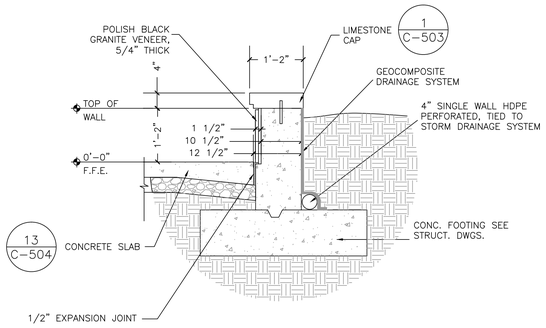

2 SECTION THRU PLANTER WALL
3/4"=1'0"

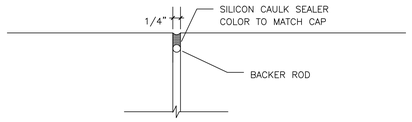

3 PLANTER WALL CAP JOINT DETAIL
1/2"=1"

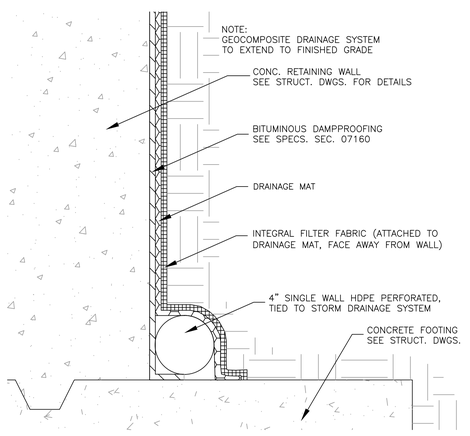

4 GEOCOMPOSITE DRAINAGE SYSTEM
NOT TO SCALE

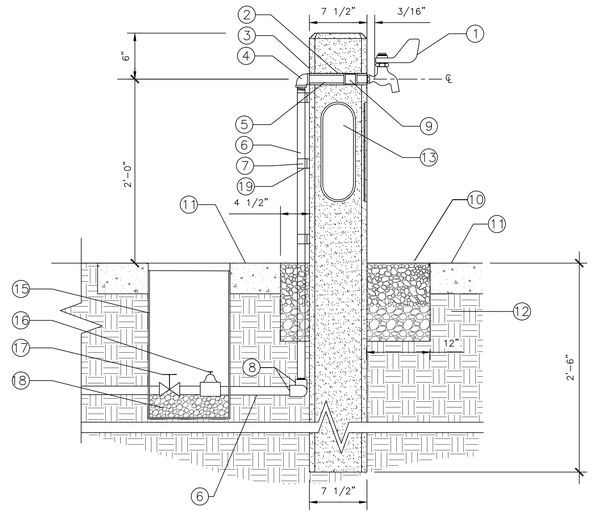

1. SELF CLOSING FAUCET (MATCH EXISTING) WITH 1/2" MIPT INLET THREAD INTO BRASS COUPLER
2. 1 1/2" DIA. CAST HOLE THROUGH POST FILL WITH EPOXY AFTER PIPE INSTALLATION DO NOT ALLOW EPOXY TO INTERFERE WITH THREADED CONNECTION BETWEEN FAUCET AND COUPLER
3. PRECAST CONCRETE POST, INSTALL 2'-6" INTO GROUND.
4. 1/2" FIPT X 3/4" FIPT BRASS REDUCING ELBOW
5. 1/2" BRASS NIPPLE LENGTH AS REQUIRED
6. 3/4" BRASS NIPPLES LENGTH AS REQUIRED
7. (3) 3/4" BRASS PIPE STRAPS SECURE TIGHTLY TO POST TO ELIMINATE PIPE MOVEMENT
8. 3/4" FIPT X FIPT BRASS 90 DEGREE ELBOW
9. 1/2" FIPT X FIPT BRASS COUPLER
10. 2' DIAMETER GRAVEL SPLASH PIT 6" MIN. DECORATIVE STONE OVER DRAINAGE STONE. DEPTH VARIES TO PROMOTE POSITIVE DRAINAGE
11. ADJACENT CONCRETE SIDEWALK
12. 90% COMPACTED SUBGRADE
13. 1/2" DEEP RECESS FOR ALUMINUM PLATE ON THREE SIDES
14. not used
15. VALVE BOX
16. OUTPUT PRESSURE REGULATING VALVE
17. ISOLATION BALL VALVE
18. WASHED RIVER GRAVEL
19. RUBBER ISOLATION GASKET, (TYP.)

5 VASE WATERING STATION
N.T.S

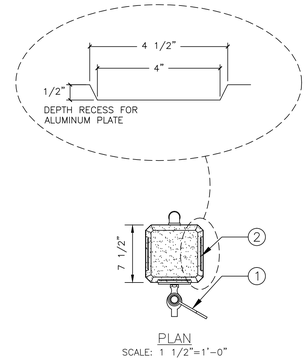

PLAN
SCALE: 1 1/2"=1'-0"

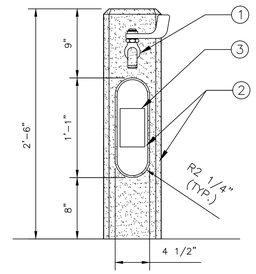

ELEVATION
SCALE: 1 1/2"=1'-0"

1. SELF CLOSING FAUCET
2. 1/2" DEPTH RECESS FOR ALUMINUM PLATE ON THREE FACES OF PRECAST POST
3. VINYL DECAL, CENTERED ON ALUMINUM PLATE SEE DO NOT DRINK SIGN ENLARGEMENT ON THREE FACES OF PRECAST POST

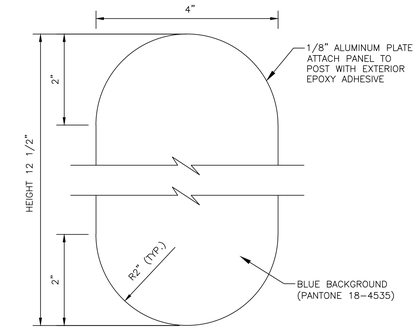

ALUMINUM PLATE
SCALE: N.T.S.

DO NOT DRINK SIGN ENLARGEMENT
SCALE: 1"= 1"

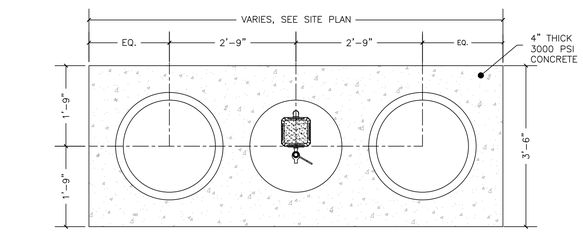

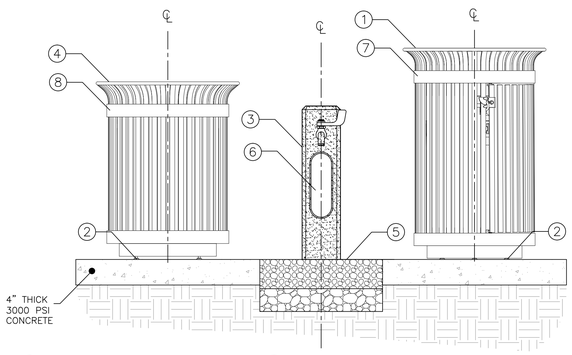

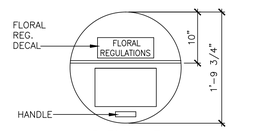

LID PLAN VIEW

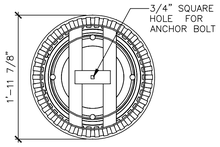

BOTTOM VIEW

1. TRASH RECEPTACLE PER SPECIFICATIONS
2. ANCHOR TO CONCRETE PER MANUFACTURERS RECOMMENDATIONS
3. WATER FAUCET ASSEMBLY SEE DETAIL THIS SHEET
4. FLOWER VASE RECEPTACLE PER SPECIFICATIONS
5. 2' DIAMETER CIRCLE GRAVEL SPLASH PIT SEE DETAIL THIS SHEET
6. RECESS FOR ALUMINUM PLATE PER SPECIFICATIONS
7. TRASH DECAL PER SPECIFICATIONS
8. FLOWER VASES DECAL PER SPECIFICATIONS

6 FLOWER WATERING STATION
N.T.S

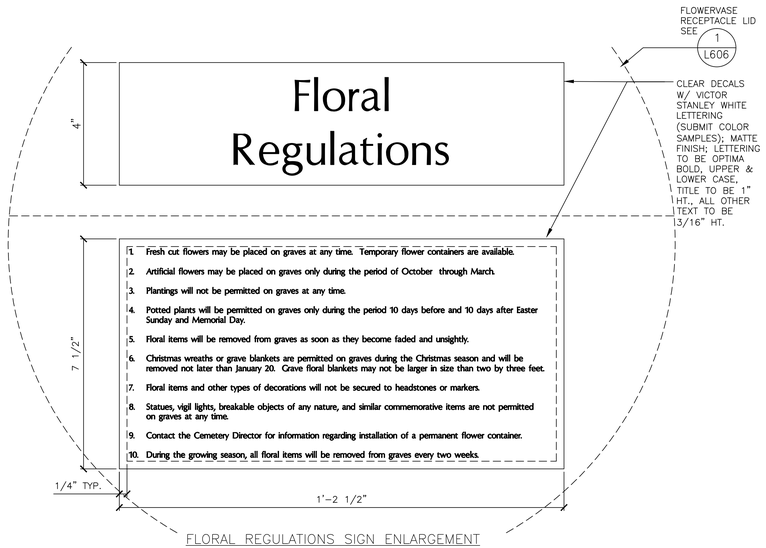

FLORAL REGULATIONS SIGN ENLARGEMENT
N.T.S.

BID DOCUMENTS

Revisions	Date

PRIME:
amec foster wheeler
AMEC FOSTER WHEELER
ENVIRONMENT & INFRASTRUCTURE
1075 BIG SHANTY ROAD NW,
SUITE 100
KENNESAW, GA. 30144
(770) 421-3400
AMEC PROJECT: 6166-15-0011

MEP ENGINEER:

GEORGIA REGISTERED PROFESSIONAL ENGINEER No. 15884 JAMES L. STUDER

IRRIGATION DESIGNER:
Irrigation Consultant Services
2231 Weatherstone Circle
Conyers, GA 30094
(770) 929-0884, fax (770) 760-8025

NATIONAL CEMETERY ADMINISTRATION

Drawing Title	Project Title	Date
DETAILS 3	4000 NICHE COLUMBARIUM GEORGIA NATIONAL CEMETERY	23 OCTOBER 2015
Approved: Director, Technical Support Service	Building Number / Checked / Drawn	Project No. 922CM3005
Approved: Chief, Architectual & Engineering Division	Location: 1080 VETERANS CEMETERY RD, CANTON, GA 30114	DRAWING NO. C-503
		Sheet 18 Of 31

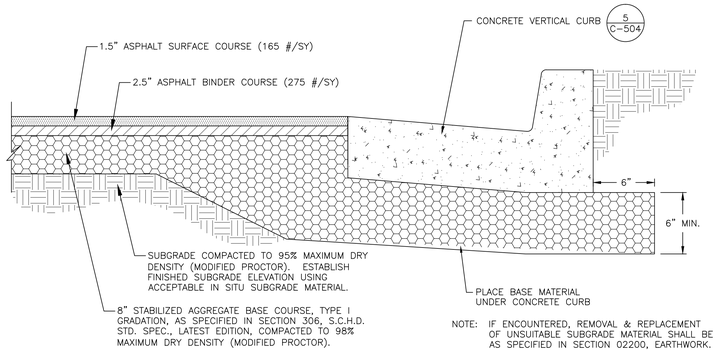

1 ASPHALT PAVEMENT SECTION
N.T.S

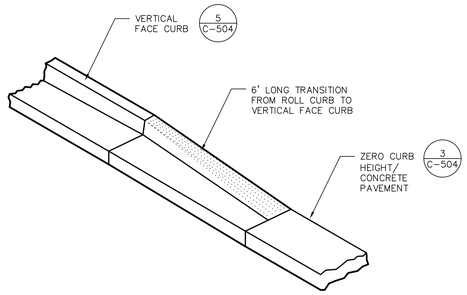

2 VERTICAL CURB TO ZERO CURB HEIGH TRANSITION
N.T.S.

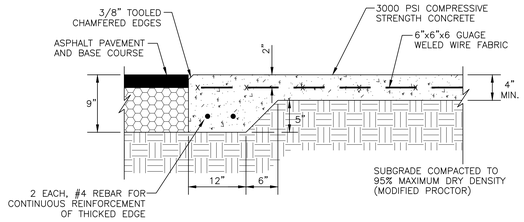

3 ASPHALT AND CONCRETE PAVEMENT INTERFACE
N.T.S.

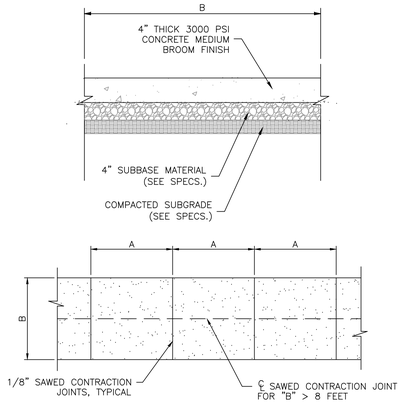

WHERE JOINT SPACING OF TRANSVERSE "A" JOINTS ARE NOT SPECIFICALLY INDICATED, "A" SHALL EQUAL "B" WHERE "B" IS EQUAL TO OR LESS THAN 6'. FOR "B" GREATER THAN 6' BUT LESS THAN 8', "A" SHALL NOT EXCEED 6'. FOR "B" GREATER THAN 8', A 1/4" SAWED CONTRACTION JOINT SHALL BE REQUIRED ALONG THE CENTERLINE AND "A" SHALL EQUAL 1/2 "B".

EXPANSION JOINTS SHALL BE INSTALLED AT 20' MAX. SPACING & AT ALL POINTS OF CURVATURE (P.C.'s), POINTS OF TANGENCY (PT), AND MID-POINT OF CURVE, UNLESS APPROVED OR INDICATED OTHERWISE ON PLAN VIEW JOINT PATTERN. ALIGN JOINTS WITH ADJOINING CURB AND/OR PAVEMENT.

4 CONCRETE PAVEMENT DETAIL
N.T.S

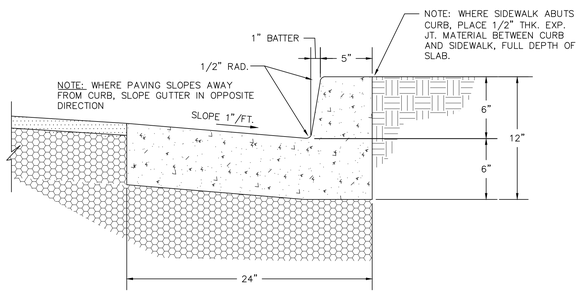

NOTE: SAWED OR TOOLED CONTRACTION JOINTS AT 10'-0" O.C. JOINTS SHALL BE 1/4" (+1/16",-0") WIDE, 1" MIN. OR MAX. D/4 DEEP WHICHEVER IS GREATER. EXPANSION JOINTS SHALL BE INSTALLED AT 50' MAX. SPACING & AT ALL POINTS OF CURVATURE (P.C.'s), POINTS OF TANGENCY (PT), AND MID-POINT OF CURVE, UNLESS APPROVED OR INDICATED OTHERWISE ON PLAN VIEW JOINT PATTERN. ALIGN JOINTS WITH ADJOINING CURB AND/OR PAVEMENT.

5 VERTICAL FACE CURB SECTION
N.T.S

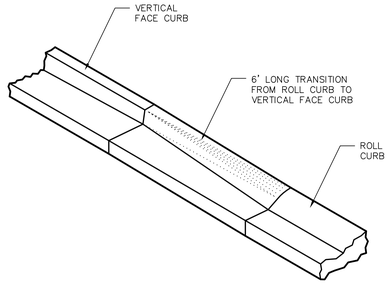

6 VERTICAL CURB TO ROLL-BACK CURB TRANSITION
N.T.S.

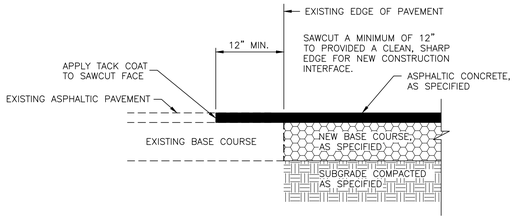

7 NEW/EXISTING PAVEMENT INTERFACE
N.T.S.

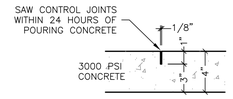

8 CONTROL JOINT DETAIL
N.T.S

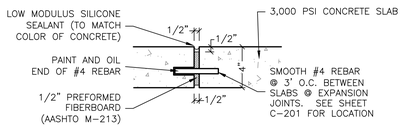

11 EXPANSION JOINT DETAIL
N.T.S

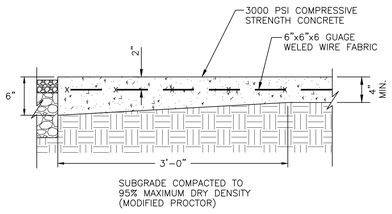

13 CONCRETE PAVEMENT ADJACENT TO NICHE UNIT
N.T.S

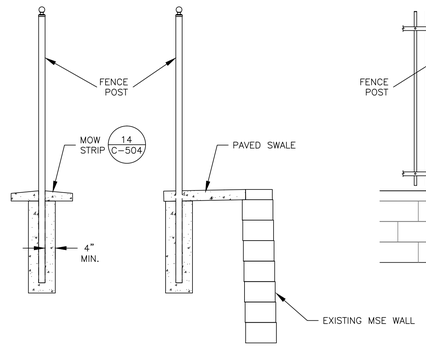

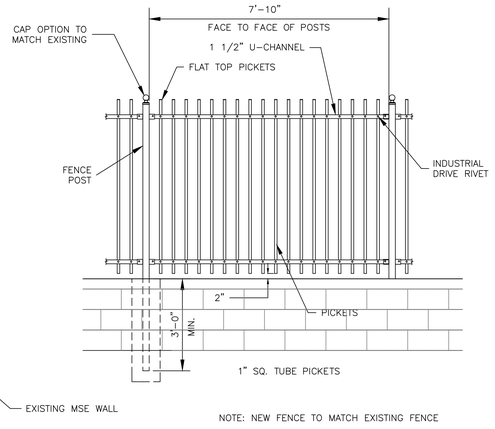

NOTE: NEW FENCE TO MATCH EXISTING FENCE

15 ORNAMENTAL FENCE DETAIL
N.T.S.

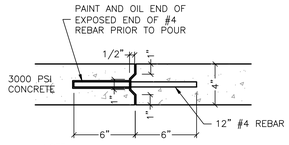

NOTE:
CONSTRUCTION JOINTS SHOULD BE MADE AT CONSTRUCTION JOINT LOCATIONS AS INDICATED BY CJ ON SHEET C-201

12 CONSTRUCTION JOINT DETAIL
N.T.S

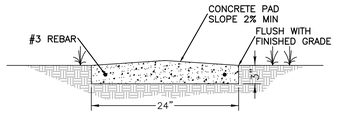

CONTRACTION JOINTS AT 10' O.C. JOINTS SHALL BE 1/4" WIDE, 1" MIN. DEEP. EXPANSION JOINTS SHALL BE INSTALLED AT 50' MAX. SPACING.

14 CONCRETE MOW STRIP - LAWN APPLICATION
N.T.S.

BID DOCUMENTS

Revisions	Date

PRIME:
AMEC FOSTER WHEELER
ENVIRONMENT & INFRASTRUCTURE
1075 BIG SHANTY ROAD NW, SUITE 100
KENNESAW, GA. 30144
(770) 421-3400
AMEC PROJECT: 6166-15-0011

MEP ENGINEER:

GEORGIA REGISTERED PROFESSIONAL ENGINEER No. 15956 JAMES L. STUDER

IRRIGATION DESIGNER:
Irrigation Consultant Services
2231 Weatherstone Circle
Conyers, GA 30094
(770) 929-0884, fax (770) 760-8025

NATIONAL CEMETERY ADMINISTRATION

Drawing Title	Project Title	Date
DETAILS 4	4000 NICHE COLUMBARIUM GEORGIA NATIONAL CEMETERY	23 OCTOBER 2015
Approved: Director, Technical Support Service	Building Number / Checked / Drawn	Project No. 922CM3005
Approved: Chief, Architectual & Engineering Division	Location: 1080 VETERANS CEMETERY RD, CANTON, GA 30114	DRAWING NO. C-504
		Sheet 19 Of 31

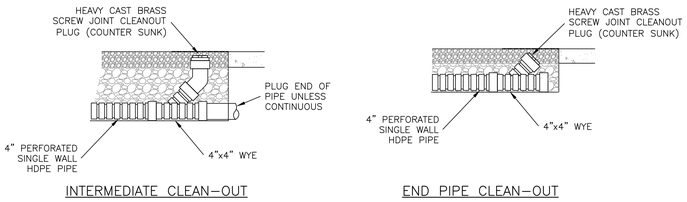

9 CLEAN OUT DETAIL - FLOWER STRIP APPLICATION
N.T.S

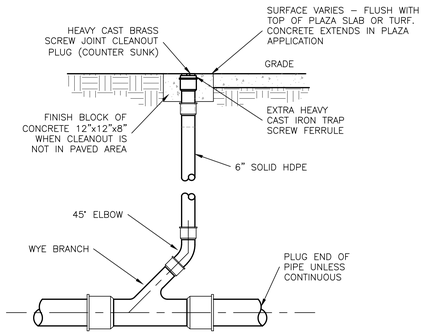

7 CLEAN OUT DETAIL - TURF\PLAZA APPLICATION
N.T.S

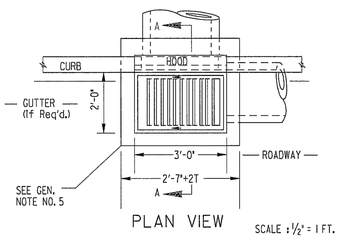

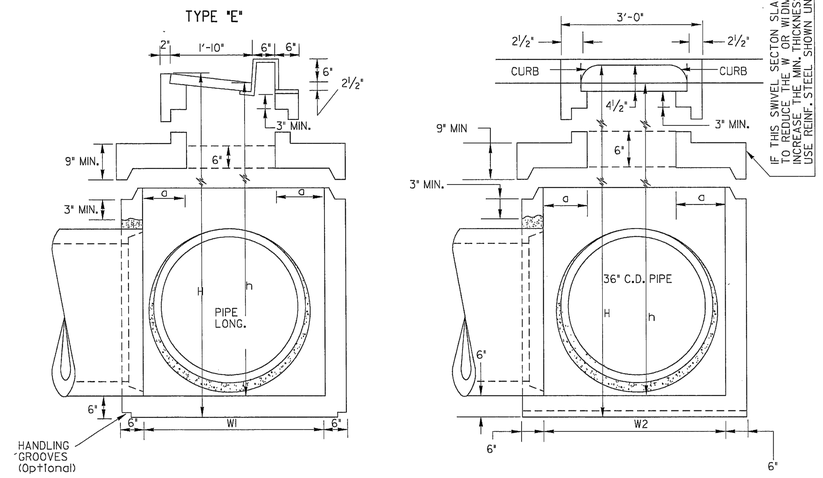

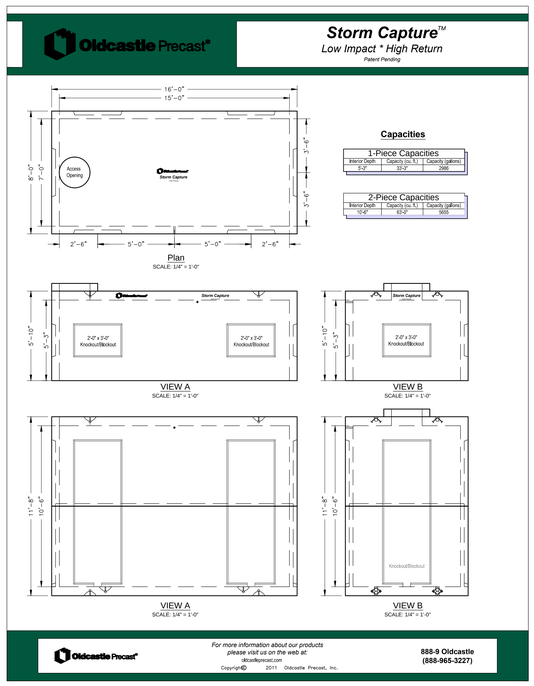

BASIS OF DESIGN – CONCRETE ALTERNATIVES MAY BE SUBMITTED.

1 UNDERGROUND DETENTION FACILITY
N.T.S.

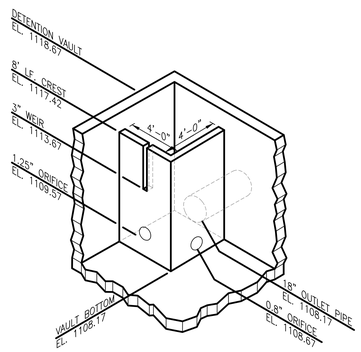

8 OUTLET CONTROL STRUCTURE
N.T.S

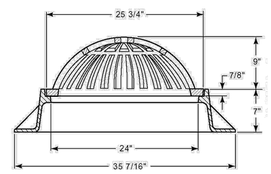

5 24-INCH DIAMETER BEEHIVE GRATE
N.T.S.

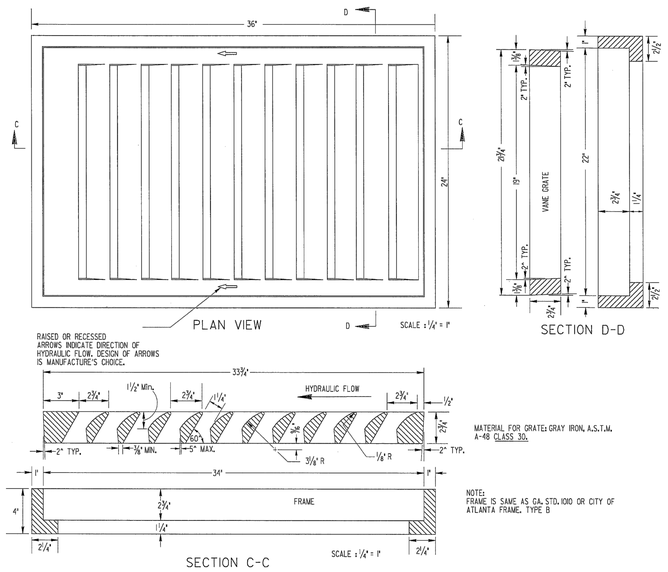

2 CURB INLET DETAIL - GDOT STD. 1019
N.T.S

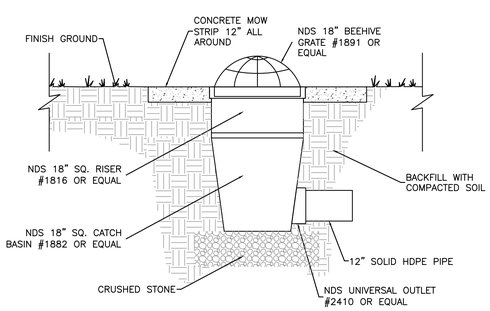

3 YARD INLET DETAIL
N.T.S

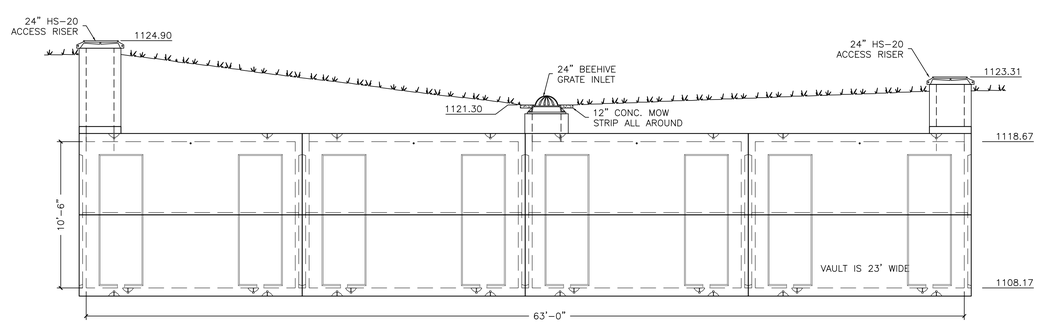

4 STORMWATER VAULT TYPICAL ELEVATION
N.T.S

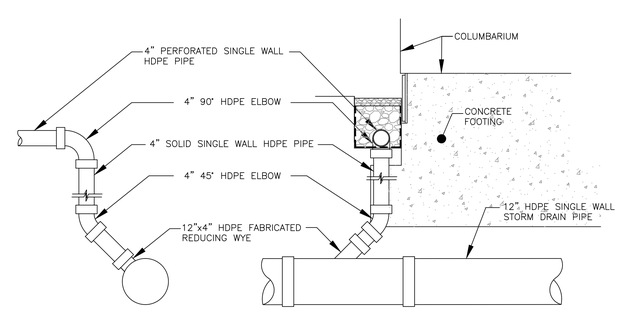

6 NICHE WALL DRAINAGE SYSTEM
N.T.S.

BID DOCUMENTS

Revisions	Date

PRIME:
AMEC FOSTER WHEELER
ENVIRONMENT & INFRASTRUCTURE
1075 BIG SHANTY ROAD NW, SUITE 100
KENNESAW, GA. 30144
(770) 421-3400
AMEC PROJECT: 6166-15-0011

MEP ENGINEER:

GEORGIA REGISTERED PROFESSIONAL ENGINEER No. 19856 JAMES L. STUDER

IRRIGATION DESIGNER:
Irrigation Consultant Services
2231 Weatherstone Circle
Conyers, GA 30094
(770) 929-0884, fax (770) 760-8025

NATIONAL CEMETERY ADMINISTRATION

Drawing Title	Project Title	Date
DETAILS 5	4000 NICHE COLUMBARIUM GEORGIA NATIONAL CEMETERY	23 OCTOBER 2015
		Project No. 922CM3005
Approved: Director, Technical Support Service	Building Number / Checked / Drawn	DRAWING NO. C-505
Approved: Chief, Architectual & Engineering Division	Location: 1080 VETERANS CEMETERY RD, CANTON, GA 30114	Sheet 20 Of 31

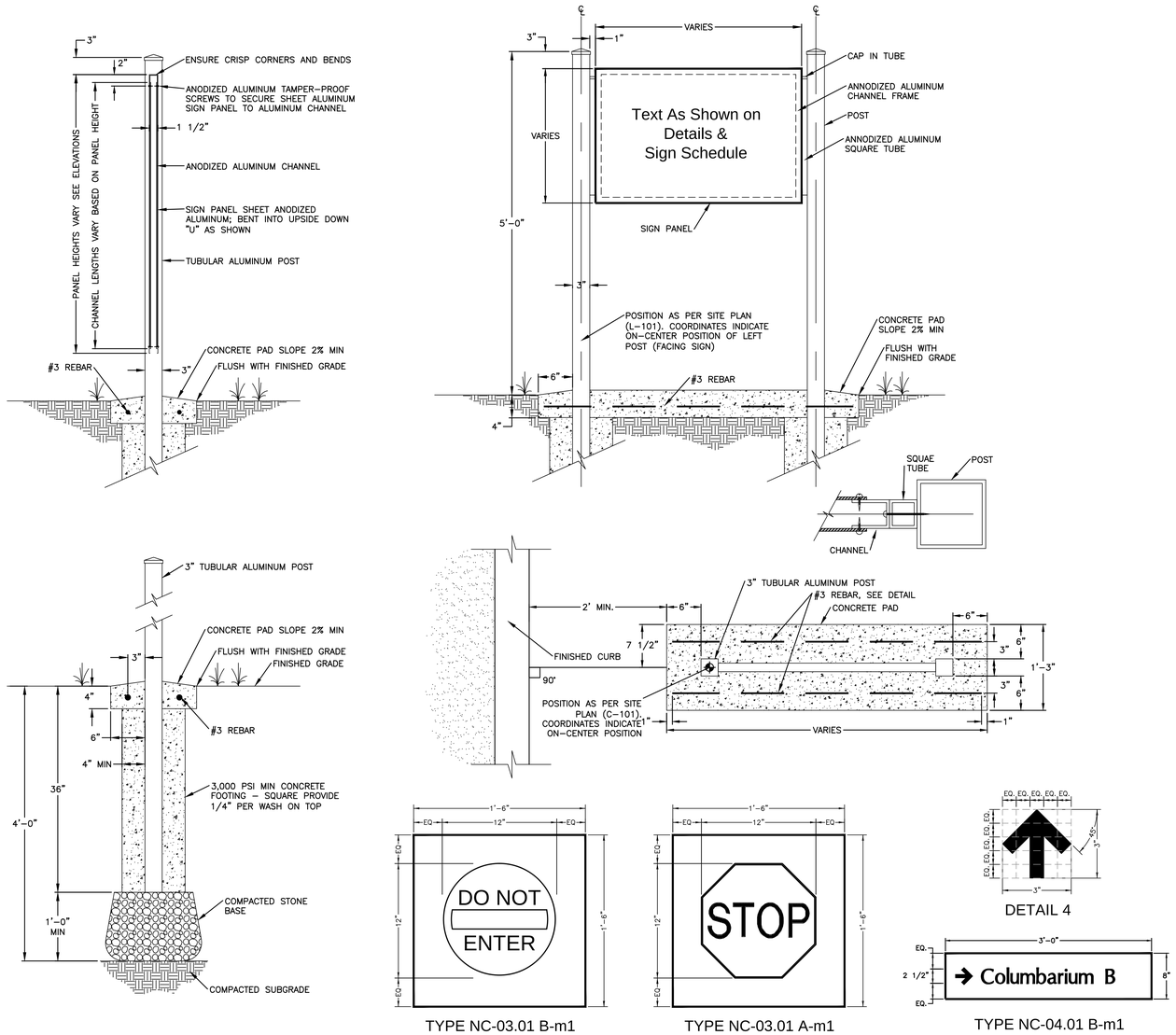

1 SIGN MESSAGE DETAILS
N.T.S

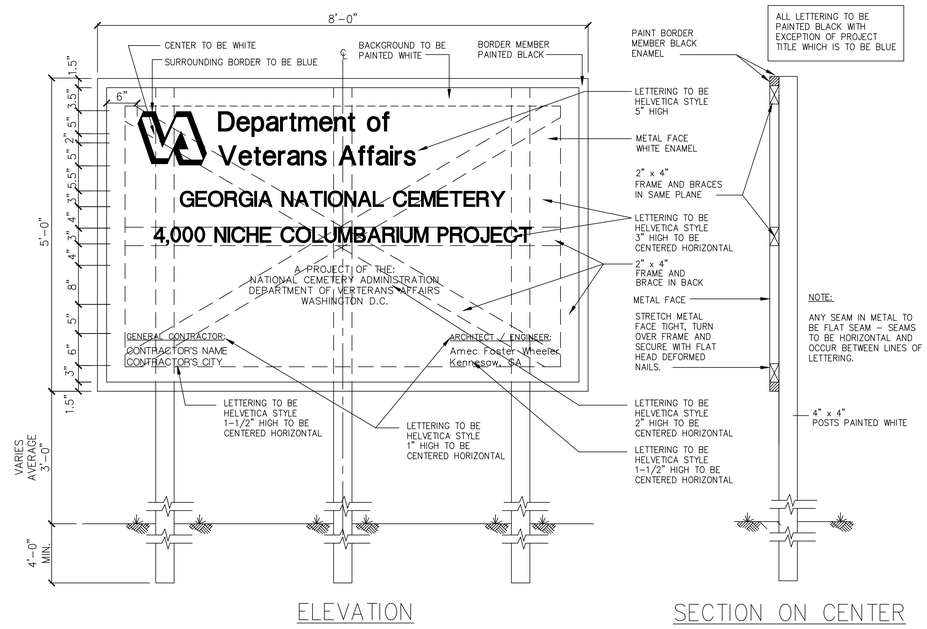

2 CONSTRUCTION SIGN DETAIL
N.T.S

BID DOCUMENTS

Revisions	Date

PRIME:
AMEC FOSTER WHEELER
ENVIRONMENT & INFRASTRUCTURE
1075 BIG SHANTY ROAD NW,
SUITE 100
KENNESAW, GA. 30144
(770) 421-3400
AMEC PROJECT: 6166-15-0011

MEP ENGINEER:

GEORGIA REGISTERED PROFESSIONAL ENGINEER No. 15995 JAMES L. STUDER

IRRIGATION DESIGNER:
Irrigation Consultant Services
2231 Weatherstone Circle
Conyers, GA 30094
(770) 929-0884, fax (770) 760-8025

NATIONAL CEMETERY ADMINISTRATION

Drawing Title	Project Title	Date
DETAILS 6	4000 NICHE COLUMBARIUM GEORGIA NATIONAL CEMETERY	23 OCTOBER 2015
		Project No. 922CM3005
Approved: Director, Technical Support Service	Building Number / Checked / Drawn	DRAWING NO. C-506
Approved: Chief, Architectual & Engineering Division	Location 1080 VETERANS CEMETERY RD, CANTON, GA 30114	Sheet 21 Of 31

Ds1 DISTURBED AREA STABILIZATION (WITH MULCH ONLY)

MULCHING APPLICATION REQUIREMENTS

MATERIAL	RATE	DEPTH
STRAW OR HAY	2 1/2 TON/ACRE	6" TO 10"
GEOTEXTILES, JUTE MATTING, NETTING, ETC.	SEE MANUFACTURERS RECOMMENDATIONS	---

Ds2 DISTURBED AREA STABILIZATION (WITH TEMPORARY SEEDING)

TABLE 1

SUGGESTED SEEDBED DEPTHS	
SLOPE	SEEDBED DEPTH
3:1 OR FLATTER	LESS THAN 4" DEPTH
2:1 TO 3:1	1" TO 4" DEPTH
2:1 OR STEEPER	DEPRESSIONS EVERY 6" TO 8" HAND-DUG, IF NECESSARY

RE-SEED AREAS WHERE AN ADEQUATE STAND OF TEMPORARY VEGETATION FAILS TO EMERGE OR WHERE A POOR STAND EXISTS.

TABLE 2

SOME TEMPORARY PLANT SPECIES, SEEDING RATES AND PLANTING DATES

SPECIES	RATES PER 1,000 SQ. FT.	RATES PER ACRE	PLANTING DATES BY REGION		
			M-L	P	C
RYE (GRAIN)	3.9 LBS.	3 BU	8/15-11/19	9/15-12/1 3/1-4/1	10/1-11/1
RYEGRASS	0.9 LB.	40 LBS.	8/15-11/15	9/1-12/15	9/15-1/1
RYE AND ANNUAL LESPEDEZA	0.6 LB. 0.6 LB.	0.5 BU 24 LBS	3/1-4/1	3/1-4/1	2/1-3/1
WEEPING LOVEGRASS	0.1 LB.	4 LBS.	4/1-6/1	4/1-6/1	3/1-6/1
SUDANGRASS	1.0 LB.	60 LBS.	5/1-8/1	5/1-8/1	4/1-8/1
BROWNTOP MILLET	1.1 LBS.	50 LBS.	4/15-6/15	4/15-7/1	4/15-7/1
WHEAT	4.1 LBS.	3 BU	9/15-12/1	10/1-12/15	10/15-1/1

1. UNUSUAL SITE CONDITIONS MAY REQUIRE HEAVIER SEEDING RATES.
2. SEEDING DATES MAY NEED TO BE ALTERED TO FIT TEMPERATURE VARIATIONS AND LOCAL CONDITIONS.

TABLE 3

FERTILIZER REQUIREMENTS FOR TEMPORARY VEGETATION

TYPE OF SPECIES	PLANTING YEAR	FERTILIZER (N-P-K)	RATE (LBS./ACRE)	N TOP DRESSING RATE (LBS./ACRE)
COOL SEASON GRASSES	FIRST SECOND MAINTENANCE	6-12-12 6-12-12 10-10-10	1500 1000 400	50-100 -- 30
COOL SEASON GRASSES AND LEGUMES	FIRST SECOND MAINTENANCE	6-12-12 0-10-10 0-10-10	1500 1000 400	0-50 -- --
TEMPORARY COVER CROPS SEEDED ALONE	FIRST	10-10-10	500	30
WARM SEASON GRASSES	FIRST SECOND MAINTENANCE	6-12-12 6-12-12 10-10-10	1500 800 400	50-100 50-100 30

Ds3 DISTURBED AREA STABILIZATION (WITH PERMANENT VEGETATION)

TABLE 1

SOME PERMANENT PLANT SPECIES, SEEDING RATES, AND PLANTING DATES

SPECIES	RATES PER ACRE	RATES PER 1,000 SQ. FT.	PLANTING DATES BY REGION			REMARKS
			M-L	P	C	
BAHIA, PENSACOLA ALONE OR WITH TEMPORARY COVER WITH OTHER PERENNIALS	60 LBS. 30 LBS.	1.4 LBS. 0.7 LBS.	–	4/1-5/31	3/1-5/31	LOW GROWING SOD PRODUCING; WILL SPREAD INTO BERMUDA LAWNS.
BAHIA, WILMINGTON ALONE OR WITH TEMPORARY COVER WITH OTHER PERENNIALS	60 LBS. 30 LBS.	1.4 LBS. 0.7 LB.	3/15-5/31	3/1-5/31	–	SAME AS ABOVE.
BERMUDA, COMMON (HULLED SEED) ALONE WITH OTHER PERENNIALS	10 LBS. 6 LBS.	0.2 LB. 0.1 LB.	–	4/1-5/31	3/15-5/31	QUICK COVER; LOW GROWING; SOD FORMING; NEEDS FULL SUN.
BERMUDA, COMMON (UNHULLED SEED) WITH TEMPORARY COVER WITH OTHER PERENNIALS	10 LBS. 6 LBS.	0.2 LB. 0.1 LB.	–	10/15-2/28	11/1-1/31	PLANT WITH WINTER ANNUALS. PLANT WITH TALL FESCUE.
BERMUDA, SPRIGS COMMON LAWN AND FORAGE HYBRIDS	40 CU. FT. SOD PLUGS 3'x3'	0.9 CU. FT.	4/15-6/15	4/1-6/15	4/1-5/31	1 CU. FT. = 650 SPRIGS; 1 BU. = 1.25 CU. FT. OR 800 SPRIGS
CROWN VETCH WITH WINTER ANNUALS OR COOL SEASON GRASSES	15 LBS.	0.3 LB.	9/1-10/15	9/1-10/15	–	MIX WITH 30 LBS. TALL FESCUE OR 15 LBS. RYE; INOCULATE SEED; PLANT ONLY NORTH OF ATLANTA.
FESCUE, TALL ALONE WITH OTHER PERENNIALS	50 LBS. 30 LBS.	1.1 LBS. 0.7 LB.	3/1-4/1 OR 8/15-9/30	8/15-10/15 OR 2/15-4/15	–	MIX WITH PERENNIAL LESPEDEZAS OR CROWN VETCH; NOT FOR DROUGHTY SOILS OR HEAVY USE AREAS.
LESPEDEZA, SERICEA SCARIFIED	60 LBS.	1.4 LBS.	4/1-5/31	3/15-5/31	3/1-5/15	WIDELY ADAPTED AND LOW MAINTENANCE; TAKES 2-3 YEARS TO ESTABLISH; SEED WITH EL INOCULANT; MIX WITH WEEPING LOVEGRASS, COMMON BERMUDA, BAHIA OR TALL FESCUE.
UNSCARIFIED SEED-BEARING HAY	75 LBS. 3 TONS.	1.7 LBS. 138 LBS.	9/1-2/28 10/1-2/1	9/1-2/28 10/1-2/28	9/1-2/28 9/15-1/15	MIX WITH TALL FESCUE OR WINTER ANNUALS. CUT WHEN SEED IS MATURE BUT BEFORE IT SHATTERS. ADD TALL FESCUE OR WINTER ANNUALS.
LESPEDEZA, AMBRO VIRGATA OR APPALOW SCARIFIED UNSCARIFIED	60 LBS. 75 LBS.	1.4 LBS. 1.7 LBS.	4/1-5/31 9/1-2/28	3/15-5/31 9/1-2/28	3/1-5/15 9/1-2/28	SPREADING GROWTH WITH HEIGHT OF 18"-24"; GOOD IN URBAN AREA; SLOW TO DEVELOP GOOD STANDS; MIX WITH WEEPING LOVEGRASS, COMMON BERMUDA, BAHIA TALL FESCUE OR WINTER ANNUALS; DO NOT MIX WITH SERICEA LESPEDEZA; INOCULATE SEED WITH EL INOCULANT.
LESPEDEZA, SHRUB (LESPEDEZA BICOLOR OR LESPEDEZA THUMBERGII) PLANTS	3'x3' SPACING		11/1-3/31	11/1-3/15	11/15-2/28	PLANT IN SMALL CLUMPS FOR WILDLIFE FOOD AND COVER.
LOVEGRASS, WEEPING ALONE WITH OTHER PERENNIALS	4 LBS. 2 LBS.	0.1 LB. 0.05 LB.	4/1-5/31	3/15-5/31	3/1-5/31	QUICK COVER; DROUGHT TOLERANT; GROWS WELL WITH SERICEA LESPEDEZA ON ROAD-BANKS AND OTHER STEEP SLOPES; SHORT LIVED.
MAIDENCANE SPRIGS	2'x3' SPACING		2/1-3/31	2/1-3/31	2/1-3/31	FOR VERY WET SITES SUCH AS RIVERBANKS AND SHORELINES. DIG SPRIGS LOCALLY.
PANICGRASS, ATLANTIC COASTAL	20 LBS.	0.5 LB.	–	3/1-4/30	3/1-4/30	GROWS WELL ON COASTAL SAND DUNES; MIX WITH SERICEA LESPEDEZA BUT NOT ON SAND DUNES.
REED CANARY GRASS ALONE WITH OTHER PERENNIALS	50 LBS. 30 LBS.	1.1 LBS. 0.7 LB.	8/15-10/15	9/1-10/15	–	GROW SIMILAR TO TALL FESCUE; FOR WET SITES.
SUNFLOWER, AZTEC MAXIMILLIAN	10 LBS.	0.2 LB.	4/15-5/31	4/15-5/31	4/1-5/31	MIX WITH WEEPING LOVE-GRASS OR OTHER LOW GROWING GRASSES OR LEGUMES.
SWITCHGRASS	20 LBS.	0.4 LB.	4/1-5/31	4/1-5/31	4/1-5/31	FOR STREAMBANK PLANTINGS, DRAINAGE DITCHES, AND WET AREAS.

TABLE 2

SUGGESTED SEEDBED DEPTHS	
SLOPE	SEEDBED DEPTH
3:1 OR FLATTER	1" TO 4" DEPTH
2:1 TO 3:1	4" DEPTH
2:1 OR STEEPER	DEPRESSIONS EVERY 6" TO 8" HAND-DUG, IF NECESSARY

TABLE 3

FERTILIZER REQUIREMENTS FOR PERMANENT VEGETATION

TYPES OF SPECIES	PLANTING YEAR	FERTILIZER (N-P-K)	RATE (LBS./ACRE	N TOP DRESSING RATE (LBS./ACRE)
COOL SEASON GRASSES	FIRST SECOND MAINTENANCE	6-12-12 6-12-12 10-10-10	1500 1000 400	50-100 -- 30
COOL SEASON GRASSES AND LEGUMES	FIRST SECOND MAINTENANCE	6-12-12 0-10-10 0-10-10	1500 1000 400	0-50 -- --
WARM SEASON GRASSES	FIRST SECOND MAINTENANCE	6-12-12 6-12-12 10-10-10	1500 800 400	50-100 50-100 30
WARM SEASON GRASSES AND LEGUMES	FIRST SECOND MAINTENANCE	6-12-12 0-10-10 0-10-10	1500 1000 400	50 -- --

1. RATES ARE FOR BROADCRESTED SEED. IF A SEED DRILL IS USED, REDUCE THE RATES BY ONE-HALF.
2. PLS IS AN ABBREVIATION OF PURE LIVE SEED.
3. CONTRACTOR SHALL USE M-L REGION FOR DETERMINATION OF SEED TYPES AND PLANTING DATES.

BID DOCUMENTS

Revisions | Date

PRIME:

amec foster wheeler

AMEC FOSTER WHEELER
ENVIRONMENT & INFRASTRUCTURE
1075 BIG SHANTY ROAD NW,
SUITE 100
KENNESAW, GA. 30144
(770) 421-3400
AMEC PROJECT: 6166-15-0011

MEP ENGINEER:

GEORGIA REGISTERED No. 15956 PROFESSIONAL ENGINEER JAMES L. STUDER

IRRIGATION DESIGNER:

Irrigation Consultant Services
2231 Weatherstone Circle
Conyers, GA 30094
(770) 929-0884, fax (770) 760-8025

NATIONAL CEMETERY ADMINISTRATION

Drawing Title: EROSION & SEDIMENT CONTROL DETAILS

Project Title: 4000 NICHE COLUMBARIUM GEORGIA NATIONAL CEMETERY

Date: 23 OCTOBER 2015

Project No. 922CM3005

Approved: Director, Technical Support Service

Building Number | Checked | Drawn

Approved: Chief, Architectual & Engineering Division

Location: 1080 VETERANS CEMETERY RD, CANTON, GA 30114

DRAWING NO. C-507

Sheet 22 Of 31

Co CRUSHED STONE CONSTRUCTION EXIT

EXIT DIAGRAM

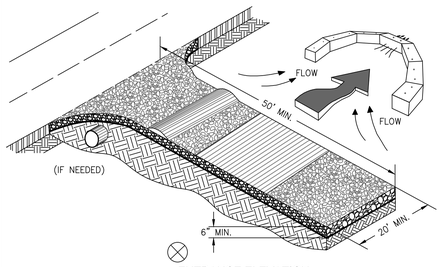

ENTRANCE ELEVATION

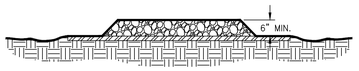

NOTES:
1. AVOID LOCATING ON STEEP SLOPES OR AT CURVES ON PUBLIC ROADS.
2. REMOVE ALL VEGETATION AND OTHER UNSUITABLE MATERIAL FROM THE FOUNDATION AREA, GRADE, AND CROWN FOR POSITIVE DRAINAGE.
3. AGGREGATE SIZE SHALL BE IN ACCORDANCE WITH NATIONAL STONE ASSOCIATION R-2 (1.5"-3.5" STONE).
4. GRAVEL PAD SHALL HAVE A MINIMUM THICKNESS OF 6".
5. PAD WIDTH SHALL BE EQUAL FULL WIDTH AT ALL POINTS OF VEHICULAR EGRESS, BUT NO LESS THAN 20'.
6. A DIVERSION RIDGE SHOULD BE CONSTRUCTED WHEN GRADE TOWARD PAVED AREA IS GREATER THAN 2%.
7. INSTALL PIPE UNDER THE ENTRANCE IF NEEDED TO MAINTAIN DRAINAGE DITCHES.
8. WHEN WASHING IS REQUIRED, IT SHOULD BE DONE ON AN AREA STABILIZED WITH CRUSHED STONE THAT DRAINS INTO AN APPROVED SEDIMENT TRAP OR SEDIMENT BASIN (DIVERT ALL SURFACE RUNOFF AND DRAINAGE FROM THE ENTRANCE TO A SEDIMENT CONTROL DEVICE).
9. WASHRACKS AND/OR TIRE WASHERS MAY BE REQUIRED DEPENDING ON SCALE AND CIRCUMSTANCE. IF NECESSARY, WASHRACK DESIGN MAY CONSIST OF ANY MATERIAL SUITABLE FOR TRUCK TRAFFIC THAT REMOVE MUD AND DIRT.
10. MAINTAIN AREA IN A WAY THAT PREVENTS TRACKING AND/OR FLOW OF MUD ONTO PUBLIC RIGHTS-OF-WAYS. THIS MAY REQUIRE TOP DRESSING, REPAIR AND/OR CLEANOUT OF ANY MEASURES USED TO TRAP SEDIMENT.

Di TO BE SHOWN ON EROSION, SEDIMENTATION AND POLLUTION CONTROL PLAN

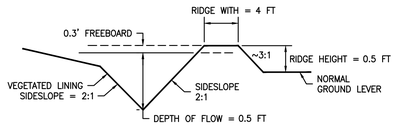

FIGURE 6-17.2

Sd1 SILT FENCE - TYPE SENSITIVE

SIDE VIEW

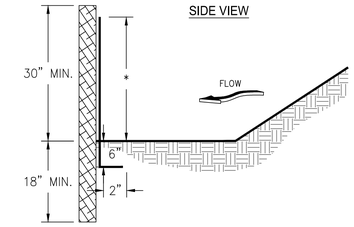

FRONT VIEW

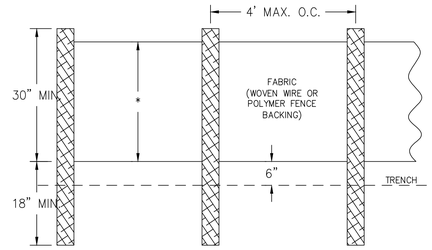

NOTES:
1. USE STEEL OR WOOD POSTS OR AS SPECIFIED BY THE EROSION, SEDIMENTATION, AND POLLUTION CONTROL PLAN.
2. HEIGHT (*) IS TO BE SHOWN ON THE EROSION, SEDIMENTATION, AND POLLUTION CONTROL PLAN.

Sd1 FASTENERS FOR SILT FENCES

OVERLAP AT FABRIC ENDS

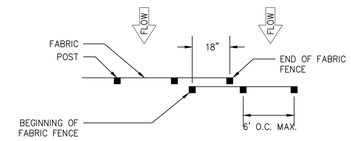

TOP VEIW - NOT TO SCALE

FRONT VIEWS - NOT TO SCALE

NOTES:
1. THE FABRIC AND WIRE SHOULD BE SECURELY FASTENED TO POSTS AND FABRIC ENDS MUST BE OVERLAPPED A MINIMUM OF 18" OR WRAPPED TOGETHER AROUND A POST TO PROVIDE A CONTINUOUS FABRIC BARRIER AROUND THE INLET.

Sd2-B BAFFLE BOX

PLAN

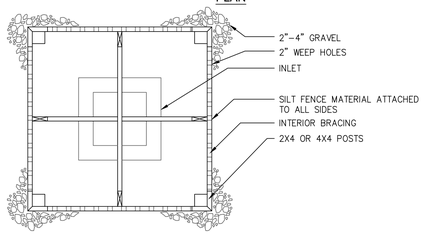

SIDE

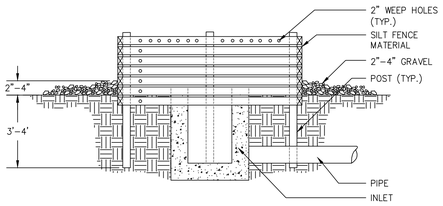

Sd2-P CURB INLET FILTER "PIGS IN BLANKET"

PLAN

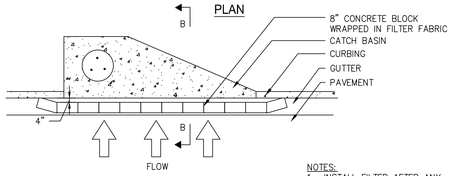

SECTION B-B

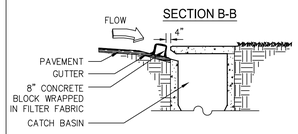

NOTES:
1. INSTALL FILTER AFTER ANY ASPHALT PAVEMENT INSTALLATION.
2. WRAP 8" CONCRETE BLOCKS IN FILTER FABRIC AND SPAN ACROSS CATCH BASIN INLET.
3. FACE OPENINGS IN BLOCKS OUTWARD.
4. LEAVE A GAP OF APPROXIMATELY 4 INCHES BETWEEN THE CURB AND THE FILTERS TO ALLOW FOR OVERFLOW TO PREVENT HAZARDOUS PONDING.
5. INSTALL OUTLET PROTECTION BELOW STORM DRAIN OUTLETS.

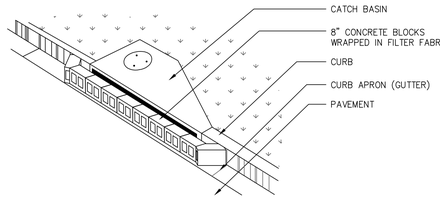

Sd4 TEMPORARY SEDIMENT TRAP

COURTESY OF CITY OF KNOXVILLE BMP EROSION AND SEDIMENT

OVERFLOW

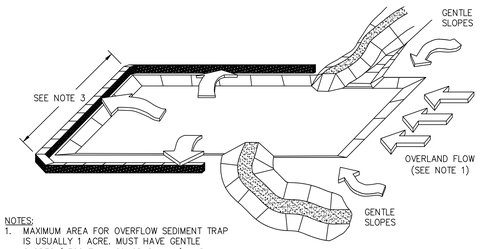

NOTES:
1. MAXIMUM AREA FOR OVERFLOW SEDIMENT TRAP IS USUALLY 1 ACRE. MUST HAVE GENTLE SLOPES (LESS THAN 2% GRADUALLY) AND PREDOMINATELY OVERLAND SHEET FLOW.
2. MAXIMUM PERMANENT WET DEPTH IS 2 FEET. OVERFLOW SEDIMENT TRAPS MAY NOT BE EFFECTIVE FOR HIGH GROUNDWATER TABLE AND INFLOWS.
3. USE THE MOST PERMEABLE SEDIMENT CONTROL IN LABELED AREA SO AS TO MAXIMIZE TRAVEL TIME AND SETTLING OF SEDIMENT.

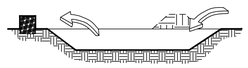

J:\6166-15-0011 GA National Columbarium\DWG\PLN-ESC Notes Details.dwg 10/28/2015 4:12pm max.lorenz

BID DOCUMENTS

Revisions	Date

PRIME:

amec foster wheeler

AMEC FOSTER WHEELER
ENVIRONMENT & INFRASTRUCTURE
1075 BIG SHANTY ROAD NW,
SUITE 100
KENNESAW, GA. 30144
(770) 421-3400
AMEC PROJECT: 6166-15-0011

MEP ENGINEER:

GEORGIA REGISTERED PROFESSIONAL ENGINEER No. 15884 JAMES L. STUDER

IRRIGATION DESIGNER:

Irrigation Consultant Services
2231 Weatherstone Circle
Conyers, GA 30094
(770) 929-0884, fax (770) 760-8025

NATIONAL CEMETERY ADMINISTRATION

Drawing Title	Project Title			Date
EROSION & SEDIMENT CONTROL DETAILS	4000 NICHE COLUMBARIUM GEORGIA NATIONAL CEMETERY			23 OCTOBER 2015
				Project No. 922CM3005
Approved: Director, Technical Support Service	Building Number	Checked	Drawn	DRAWING NO. C-508
Approved: Chief, Architectual & Engineering Division	Location 1080 VETERANS CEMETERY RD, CANTON, GA 30114			Sheet 23 Of 31

<u>EROSION, SEDIMENTATION, AND POLLUTION CONTROL PLAN</u>
<u>(ESPC Plan)</u>

THIS PLAN WAS PREPARED AS REQUIRED BY NPDES GENERAL PERMIT NO. GAR 100001. THESE PLAN SHEETS AND ALL REQUIREMENTS OF THE GENERAL PERMIT AS WELL AS LOCAL, STATE, AND FEDERAL REGULATIONS OR LAWS APPLY REGARDLESS OF SPECIFIC INCLUSION IN THIS PLAN.

OWNER/DEVELOPER: DEPARTMENT OF VETERANS AFFAIRS
GEORGIA NATIONAL CEMETERY
1080 VETERANS CEMETERY ROAD
CANTON, GEORGIA 30114

<u>SITE DESCRIPTION</u>

OWNER/DEVELOPER AS PRIMARY PERMITTEE WILL OVERSEE SITE CONSTRUCTION LOCATED WITHIN THE PROPERTY SITUATED IN LAND LOTS 55 AND 56 OF THE 22nd DISTRICT OF CHEROKEE COUNTY, GEORGIA. THE CONSTRUCTION SITE AREA IS LOCATED WITHIN THE GEORGIA NATIONAL CEMETERY, CANTON, GEORGIA. THE ENTIRE SITE AREA IS APPROXIMATELY 775 ACRES AND THE DISTURBED AREA: 1.36 ACRES.

THE PROPOSED USE FOR THIS DEVELOPMENT IS FOR A 4000-NICHE COLUMBARIUM, DRIVEWAYS, ASSOCIATED LANDSCAPE AND STORMWATER MANAGEMENT STRUCTURES.

CONSTRUCTION WILL BEGIN WITH PLACEMENT OF PERIMETER SILT PROTECTION BARRIERS, AND CONSTRUCTION ENTRANCE. AFTER THESE EROSION CONTROL BEST MANAGEMENT PRACTICES (BMPS) HAVE BEEN INSTALLED, CLEARING AND GRUBBING OF VEGETATION WILL COMMENCE IN AREAS THAT ARE TO BE DISTURBED. THIS SITE WILL THEN BE GRADED AND UTILITIES WILL BE INSTALLED. ONCE BROUGHT TO FINAL GRADE, THE ROADS WILL BE PAVED WHILE ALL OTHER EXPOSED AREAS WILL BE STABILIZED WITH VEGETATION, SIDEWALKS, OR STRUCTURES.

<u>GENERAL NOTES</u>

1. NO CONSTRUCTION ACTIVITIES SHALL BE CONDUCTED WITHIN THE 25-FOOT OR 50-FOOT UNDISTURBED STREAM BUFFER AS MEASURED HORIZONTALLY FROM THE POINT OF WRESTED VEGETATION ALONG THE BANKS OF ALL STATE WATERS WITHOUT FIRST ACQUIRING THE NECESSARY VARIANCES AND PERMITS.
2. ANY AMENDMENT/REVISION TO THE EROSION, SEDIMENTATION AND POLLUTION CONTROL PLAN WHICH HAS A SIGNIFICANT EFFECT ON BMP'S WITH A HYDRAULIC COMPONENT MUST BE CERTIFIED BY THE DESIGN PROFESSIONAL.
3. AFTER CONSTRUCTION, EROSION AND SEDIMENTATION SHALL BE MANAGED BY INSTALLATION OF PERMANENT VEGETATION, ROADS, PARKING LOTS, ASPHALT PAVING AND OTHER PERMANENT SITE FEATURES.
4. MINIMIZING WIND EROSION AND CONTROLLING DUST SHALL BE ACCOMPLISHED BY ONE OR MORE OF THE FOLLOWING METHODS:
   A. COVERING 30% OR MORE OF THE SOIL SURFACE WITH NON-ERODIBLE MATERIAL
   B. ROUGHENING THE SOIL TO PRODUCE RIDGES PERPENDICULAR TO THE PREVAILING WIND.
   C. FREQUENT WATERING OF EXCAVATION AND FILL AREAS.
   D. PROVIDING GRAVEL OR PAVING AT EXIT DRIVES.
5. TEMPORARY SEDIMENT TRAP SHALL BE CONSTRUCTED TO ACCOMMODATE 67 CUBIC YARDS OF STORAGE PER ACRE DRAINED.
6. PRIOR TO THE LAND DISTURBING CONSTRUCTION, THE CONTRACTOR SHALL SCHEDULE A PRE-CONSTRUCTION MEETING WITH THE AREA SITE DEVELOPMENT INSPECTOR.
7. THE CONTRACTOR SHALL OBSERVE THE PROJECT SEQUENCE SHOWN ON THE PLAN. THE CONTRACTOR SHALL MAINTAIN CAREFUL SCHEDULING AND PERFORMANCE TO INSURE THAT LAND STRIPPED OF ITS NATURAL COVER IS EXPOSED ONLY IN SMALL QUANTITIES.
8. THE OWNER AGREES TO PROVIDE AND MAINTAIN OFF-STREET PARKING ON THE SUBJECT PROPERTY DURING THE ENTIRE CONSTRUCTION PERIOD.
9. NO STAGING AREAS, MATERIAL STORAGE, CONCRETE WASH OUT AREAS, OR DEBRIS BURN AND BURIAL HOLES SHALL BE LOCATED WITHIN 500 FEET OF DESIGNATED TREE PROTECTION AREAS.
10. A COPY OF THE APPROVED LAND DISTURBANCE PLAN, APPROVED EROSION, SEDIMENTATION AND POLLUTION PLAN, AND NPDES GENERAL PERMIT NO. GAR 100001 SHALL BE PRESENT ON THE SITE AT ALL TIMES.
11. WASTE MATERIALS SHALL NOT BE DISCHARGED TO WATERS OF THE STATE, EXCEPT AS AUTHORIZED BY A SECTION 404 PERMIT.
12. THE DESIGN PROFESSIONAL MAY PERFORM PERIODIC AUDITS OF THE CONTRACTOR'S EROSION CONTROL RECORDS. HOWEVER, REGARDLESS OF WHETHER THESE AUDITS ARE PERFORMED, THE CONTRACTOR SHALL REMAIN RESPONSIBLE FOR THE PROPER MAINTENANCE OF THESE RECORDS AND REPORTING OF RESULTS AS REQUIRED BY THE NPDES PERMIT.
13. **THE ESCAPE OF SEDIMENT FROM THE SITE SHALL BE PREVENTED BY THE INSTALLATION OF EROSION AND SEDIMENT CONTROL MEASURES AND PRACTICES PRIOR TO, OR CONCURRENT WITH, LAND-DISTURBING ACTIVITIES.**
14. **EROSION CONTROL MEASURES WILL BE MAINTAINED AT ALL TIMES. IF FULL IMPLEMENTATION OF THE APPROVED PLAN DOES NOT PROVIDE FOR EFFECTIVE EROSION CONTROL, ADDITIONAL EROSION AND SEDIMENT CONTROL MEASURES SHALL BE IMPLEMENTED TO CONTROL OR TREAT THE SEDIMENT SOURCE.**
15. **ANY DISTURBED AREA LEFT EXPOSED FOR A PERIOD GREATER THAN 14 DAYS SHALL BE STABILIZED WITH MULCH OR TEMPORARY SEEDING.**

<u>INITIAL PHASE EROSION CONTROL NOTES:</u>

PRIOR TO COMMENCING LAND DISTURBANCE ACTIVITY, THE LIMITS OF LAND DISTURBANCE SHALL BE CLEARLY AND ACCURATELY DEMARCATED WITH STAKES, RIBBONS, OR OTHER APPROPRIATE MEANS. THE LOCATION AND EXTENT OF ALL AUTHORIZED LAND DISTURBANCE ACTIVITY SHALL BE DEMARCATED FOR THE DURATION OF THE CONSTRUCTION ACTIVITY. NO LAND DISTURBANCE SHALL OCCUR OUTSIDE THE APPROVED LIMITS INDICATED ON THE APPROVED PLAN.

PRIOR TO ANY OTHER CONSTRUCTION, A STABILIZED CONSTRUCTION EXIT SHALL BE CONSTRUCTED AT EACH POINT OF ENTRY TO OR EXIT FROM THE SITE OR ONTO ANY PUBLIC ROADWAY.

THE FOLLOWING INITIAL EROSION CONTROL MEASURES SHALL BE IMPLEMENTED PRIOR TO ANY OTHER CONSTRUCTION ACTIVITY.

1. THE CONSTRUCTION EXIT, CONSISTING OF A MINIMUM PAD SIZE OF 20 FEET BY 50 FEET WITH A MINIMUM OF 6" THICK STONE, SHALL BE PLACED AS SHOWN ON THE PLAN. THE STONE SIZE SHALL CONSIST OF COURSE AGGREGATE BETWEEN 1-1/2" AND 3-1/2" IN DIAMETER AND OVERLAID ON A GEOTEXTILE UNDERLINER. THE GEOTEXTILE UNDERLINER SHALL MEET THE REQUIREMENTS OF AASHTO M288, SEPARATION REQUIREMENTS.
2. IMMEDIATELY AFTER THE ESTABLISHMENT OF CONSTRUCTION EXITS, ALL PERIMETER EROSION CONTROL AND STORM WATER MANAGEMENT DEVICES SHALL BE INSTALLED AS SHOWN ON THE INITIAL PHASE EROSION CONTROL PLAN. CONTRACTOR SHALL CONSTRUCT A TEMPORARY SEDIMENT TRAP AS SHOWN ON THE INITIAL PHASE EROSION CONTROL PLAN TO CONTROL EROSION AND STORM WATER RUNOFF.
3. "SENSITIVE" SILT FENCE SHALL BE INSTALLED AT THE PERIMETER OF THE DISTURBED AREA AS SHOWN ON THE PLAN. THE SILT FENCE SHALL BE PLACED IN ACCORDANCE WITH THE MANUAL FOR EROSION CONTROL IN GEORGIA, TABLE 6-20.2, CRITERIA FOR SILT FENCE PLACEMENT. THE SILT FENCE SHALL BE KEPT ERECT AT ALL TIMES AND REPAIRED WHEN REQUESTED BY THE SITE INSPECTOR OR THE DESIGN PROFESSIONAL OF RECORD. SILT SHALL BE REMOVED WHEN ACCUMULATION REACHES ½ HEIGHT OF THE BARRIER. THE PERIMETER SILT FENCE SHALL BE INSPECTED DAILY FOR ANY FAILURES. ANY FAILURES OF SAID FENCING SHALL BE REPAIRED IMMEDIATELY.
4. TREE PROTECTION FENCING SHALL BE INSTALLED PRIOR TO THE START OF ANY LAND DISTURBANCE ACTIVITY AND MAINTAINED UNTIL FINAL LANDSCAPING IS INSTALLED. THE TREE PROTECTION FENCING SHALL BE INSPECTED DAILY. ANY FAILURE OF SAID FENCING SHALL BE REPAIRED IMMEDIATELY.

THE PRIMARY PERMITTEE MUST RETAIN THE DESIGN PROFESSIONAL WHO PREPARED THE PLANS, EXCEPT WHEN THE PRIMARY PERMITTEE HAS REQUESTED IN WRITING AND EPD HAS AGREED TO AN ALTERNATIVE DESIGN PROFESSIONAL, TO INSPECT THE INSTALLATION OF THE INITIAL SEDIMENT STORAGE REQUIREMENTS AND PERIMETER CONTROL BMPs WHICH THE DESIGN PROFESSIONAL DESIGNED WITHIN SEVEN (7) DAYS AFTER INSTALLATION. THE DESIGN PROFESSIONAL SHALL DETERMINE IF THESE BMPs HAVE BEEN INSTALLED AND ARE BEING MAINTAINED AS DESIGNED. THE DESIGN PROFESSIONAL SHALL REPORT THE RESULTS OF THE INSPECTION TO THE PRIMARY PERMITTEE WITHIN SEVEN (7) DAYS AND THE PERMITTEE MUST CORRECT ALL DEFICIENCIES WITHIN TWO (2) BUSINESS DAYS OF RECEIPT OF THE INSPECTION REPORT FROM THE DESIGN PROFESSIONAL UNLESS WEATHER RELATED SITE CONDITIONS ARE SUCH THAT ADDITIONAL TIME IS REQUIRED.

AFTER APPROVAL OF THE INITIAL EROSION CONTROL INSTALLATION THE CONTRACTOR MAY PROCEED WITH CLEARING AND GRUBBING ACTIVITIES.

THE CONTRACTOR CAN UTILIZE CLEARED TREES AS BARRIER BRUSH SEDIMENT CONTROL IN AREAS SHOWN ON THE PLAN WHERE INITIAL GRADING ACTIVITIES WILL NOT OCCUR.

TOPSOIL SHALL BE STRIPPED FROM ALL CUT AND FILL AREAS AND STOCKPILED FOR LATER REUSE ON FINAL GRADE SOIL/SLOPE SURFACES.

NO BURN OR BURY PIT SHALL BE PERMITTED ON THE CONSTRUCTION SITE WITHOUT WRITTEN PERMISSION BY THE OWNER AND/OR THE DESIGN PROFESSIONAL.

ADDITIONAL SILT BARRIERS MUST BE PLACED AS SHOWN ON THE PLAN AS ACCESS IS OBTAINED DURING CLEARING. NO GRADING SHALL TAKE PLACE UNTIL SILT BARRIER INSTALLATION AND TEMPORARY SEDIMENT TRAP ARE CONSTRUCTED AS SHOWN ON THE INITIAL PHASE EROSION CONTROL PLAN.

ALL SILT FENCE SHALL MEET THE REQUIREMENTS OF SECTION 171 OF THE "DEPARTMENT OF TRANSPORTATION, STATE OF GEORGIA STANDARD SPECIFICATIONS, CONSTRUCTION OF TRANSPORTATION SYSTEMS", (GDOT STANDARD SPECIFICATIONS), LATEST EDITION.

ALL ITEMS IN THESE NOTES SHALL MEET THE REQUIREMENTS AS SET FORTH IN SECTIONS 161, 162, 163, AND 164 OF THE GDOT STANDARD SPECIFICATIONS UNLESS OTHERWISE SPECIFIED IN THE PROJECT DOCUMENTS.

TEMPORARY SEEDING AND/OR MULCH SHALL BE APPLIED TO ALL EXPOSED AREAS WITHIN 14 DAYS OF LAND DISTURBANCE.

ALL DISTURBED AREAS LEFT MULCHED AFTER 30 DAYS SHALL BE STABILIZED WITH TEMPORARY VEGETATION.

SEDIMENT AND EROSION CONTROL MEASURES SHALL BE CHECKED AFTER EACH RAIN EVENT. EACH DEVICE SHALL BE MAINTAINED OR REPLACED IF SEDIMENT ACCUMULATION HAS REACHED ONE HALF THE CAPACITY OF THE DEVICE. ADDITIONAL DEVICES SHALL BE INSTALLED IF NEW CHANNELS HAVE DEVELOPED.

THE CONSTRUCTION EXIT SHALL BE MAINTAINED IN A CONDITION WHICH WILL PREVENT TRACKING OR FLOWING OF MUD ONTO PUBLIC RIGHTS-OF-WAY. THIS MAY REQUIRE PERIODIC TOP DRESSING WITH A 1" TO 3" LAYER OF STONE, AS CONDITIONS DEMAND. ALL MATERIALS SPILLED, DROPPED, WASHED, OR TRACKED FROM VEHICLES ONTO PUBLIC ROADWAYS OR INTO STORM DRAINS SHALL BE REMOVED IMMEDIATELY.

CONTRACTOR SHALL INSPECT CONTROL MEASURES AT THE END OF EACH WORKING DAY TO ENSURE MEASURES ARE FUNCTIONING PROPERLY.

EROSION CONTROL MEASURES SHALL BE MAINTAINED AT ALL TIMES. IF FULL IMPLEMENTATION OF THE APPROVED PLAN DOES NOT PROVIDE FOR EFFECTIVE EROSION CONTROL, AS A PART OF THE SCOPE OF THIS PROJECT, ADDITIONAL EROSION AND SEDIMENT CONTROL MEASURES SHALL BE IMPLEMENTED TO CONTROL OR TREAT THE SEDIMENT SOURCE

FAILURE TO INSTALL, OPERATE, OR MAINTAIN ALL EROSION CONTROL MEASURES WILL RESULT IN ALL CONSTRUCTION BEING STOPPED ON THE JOB UNTIL SUCH MEASURES ARE CORRECTED BACK TO THE APPROVED EROSION CONTROL PLAN.

THE SITE CONTRACTOR SHALL BE RESPONSIBLE FOR MAINTENANCE OF ALL EROSION CONTROL MEASURES INCLUDING REPLACING OR REPAIRING ANY DAMAGED DEVICES DUE TO ANY CONSTRUCTION ACTIVITY BY OTHERS.

<u>INTERMEDIATE PHASE EROSION CONTROL NOTES:</u>

THE FOLLOWING EROSION CONTROL MEASURES SHALL BE IMPLEMENTED DURING THE GRADING PHASE OF CONSTRUCTION.

DURING CONSTRUCTION, THE CONTRACTOR SHALL MAINTAIN CAREFUL SCHEDULING AND PERFORMANCE TO ENSURE THAT LAND STRIPPED OF ITS NATURAL GROUND COVER IS EXPOSED ONLY IN SMALL QUANTITIES AND LIMITED DURATIONS, BEFORE PERMANENT EROSION PROTECTION IS ESTABLISHED.

SEDIMENT SHALL NOT BE WASHED INTO INLETS. IT SHALL BE REMOVED FROM THE SEDIMENT TRAPS AND DISPOSED OF AND STABILIZED SO THAT IT WILL NOT ENTER THE INLET AGAIN.

EROSION CONTROL DEVICES SHALL BE INSTALLED IMMEDIATELY AFTER GROUND DISTURBANCE OCCURS. THE LOCATION OF SOME OF THE EROSION CONTROL DEVICES MAY HAVE TO BE ALTERED FROM THAT SHOWN ON THE APPROVED PLAN IF DRAINAGE PATTERNS DURING CONSTRUCTION ARE DIFFERENT FROM THE PROPOSED DRAINAGE PATTERNS. AS A PART OF THIS PROJECT, IT IS THE CONTRACTOR'S RESPONSIBILITY TO ACCOMPLISH EROSION CONTROL FOR ALL DRAINAGE PATTERNS CREATED AT VARIOUS STAGES DURING CONSTRUCTION. ANY DIFFICULTY IN CONTROLLING EROSION DURING ANY PHASE OF CONSTRUCTION SHALL IMMEDIATELY BE REPORTED TO THE DESIGN PROFESSIONAL WHO PREPARED THIS PLAN WHO WILL ASSIST THE CONTRACTOR TO ADDRESS THE IDENTIFIED DIFFICULTIES.

THE CONTRACTOR SHALL FURNISH AND MAINTAIN ALL NECESSARY BARRICADES WHILE ROADWAY FRONTAGE IMPROVEMENTS ARE BEING MADE.

"SENSITIVE" TYPE SILT FENCE SHALL BE INSTALLED AT THE TOE OF ALL FILL SLOPES 10 FEET OR GREATER IN HEIGHT. THE SILT FENCE SHALL BE PLACED IN ACCORDANCE WITH THE MANUAL FROM EROSION CONTROL IN GEORGIA, TABLE 6-20.2, CRITERIA FOR SILT FENCE PLACEMENT. THE SILT FENCE SHALL BE MAINTAINED UNTIL PERMANENT GROUND COVER IS ESTABLISHED ON THE SLOPE. SILT SHALL BE REMOVED WHEN ACCUMULATION REACHES ½ HEIGHT OF THE BARRIER.

THE CONTRACTOR SHALL BE RESPONSIBLE FOR ESTABLISHING BARRIERS AT THE TOE OF THE SLOPES UNDER CONSTRUCTION. THESE BARRIERS SHALL BE AS SHOWN IN THE PLAN. THE BARRIERS MAY BE RELOCATED AND REUSED AFTER PERMANENT SLOPE STABILIZATION BECOMES FULLY ESTABLISHED. AS THEY ARE RELOCATED ANY DEFECTIVE MATERIALS IN THE BARRIER SHALL BE REPLACED. IN ADDITION ALL DEBRIS AND SILT AT THE PREVIOUS LOCATION SHALL BE REMOVED.

CUT AND FILL SLOPES ARE NOT TO EXCEED 2:1. EROSION CONTROL MATTING SHALL BE INSTALLED ON ALL SLOPES THAT EXCEED 2.5(H):1(V) AND ARE TEN FEET OR GREATER IN HEIGHT.

TWO ROWS OF "SENSITIVE" TYPE SILT FENCE SHALL BE PLACED AT THE TOE OF ALL DIRT STOCK PILE AREAS. SEE DETAILS FOR ADDITIONAL INFORMATION.

INLET SEDIMENT PROTECTION MEASURES SHALL BE INSTALLED ON ALL STORM STRUCTURES AS THEY ARE CONSTRUCTED. SEE PLAN VIEW FOR SPECIFIC TYPE AND DETAILS FOR ADDITIONAL INFORMATION ON TYPE OF INLET PROTECTION SPECIFIED.

MULCH OR TEMPORARY SEEDING SHALL BE APPLIED TO ALL EXPOSED AREAS WITHIN 14 DAYS OF LAND DISTURBANCE. THIS SHALL BE PERFORMED EVEN IF ADDITIONAL GRADING IS PLANNED IN THESE AREAS AT A LATER STAGE OF THE PROJECT.

ALL DISTURBED AREAS LEFT MULCHED AFTER 30 DAYS SHALL BE STABILIZED WITH TEMPORARY SEEDING.

CONTRACTOR SHALL MAINTAIN THE SEDIMENT TRAP(S) UNTIL PERMANENT GROUND COVER IS ESTABLISHED. SEDIMENT SHALL BE CLEANED OUT OF THE TRAP(S) WHEN IT REACHES THE ONE THIRD DEPTH OF EACH TRAP. SILT DEPTH GAUGES SHALL BE ESTABLISHED TO PROVIDE A VISUAL INDICATION OR WHEN SILT IS TO BE REMOVED FROM EACH TRAP. SEE SEPARATE DETAILS FOR ADDITIONAL INFORMATION.

SEDIMENT AND EROSION CONTROL MEASURES SHALL BE CHECKED AFTER EACH RAIN EVENT. EACH DEVICE IS TO BE MAINTAINED OR REPLACED IF SEDIMENT ACCUMULATION HAS REACHED ONE HALF THE CAPACITY OF THE DEVICE. ADDITIONAL DEVICES MUST BE INSTALLED IF NEW CHANNELS HAVE DEVELOPED.

THE CONSTRUCTION EXIT SHALL BE MAINTAINED IN A CONDITION WHICH WILL PREVENT TRACKING OR FLOWING OF MUD ONTO PUBLIC RIGHTS-OF-WAY. THIS MAY REQUIRE PERIODIC TOP DRESSING WITH A 1' TO 3" LAYER OF STONE, AS CONDITIONS DEMAND. ALL MATERIALS SPILLED, DROPPED, WASHED, OR TRACKED FROM VEHICLES ONTO PUBLIC ROADWAYS OR INTO STORM DRAINS SHALL BE REMOVED IMMEDIATELY.

CONTRACTOR SHALL INSPECT CONTROL MEASURES AT THE END OF EACH WORKING DAY TO ENSURE MEASURES ARE FUNCTIONING PROPERLY.

FAILURE TO INSTALL, OPERATE, OR MAINTAIN ALL EROSION CONTROL MEASURES WILL RESULT IN ALL CONSTRUCTION BEING STOPPED ON THE JOB UNTIL SUCH MEASURES ARE CORRECTED BACK TO THE APPROVED EROSION CONTROL PLAN.

THE SITE CONTRACTOR SHALL BE RESPONSIBLE FOR MAINTENANCE OF ALL EROSION CONTROL MEASURES INCLUDING REPLACING OR REPAIRING ANY DAMAGED DEVICES DUE TO ANY CONSTRUCTION ACTIVITY BY OTHERS.

<u>FINAL PHASE EROSION CONTROL NOTES:</u>

THE FOLLOWING EROSION CONTROL MEASURES SHALL BE IMPLEMENTED DURING THE FINAL EROSION CONTROL PHASE OF CONSTRUCTION.

SEDIMENT SHALL NOT BE WASHED INTO INLETS. IT SHALL BE REMOVED FROM THE SEDIMENT TRAPS AND DISPOSED OF AND STABILIZED SO THAT IT WILL NOT ENTER THE INLETS AGAIN.

MULCH OR TEMPORARY SEEDING SHALL BE APPLIED TO ALL EXPOSED AREAS WITHIN 14 DAYS OF LAND DISTURBANCE.

ALL DISTURBED AREAS LEFT MULCHED AFTER 30 DAYS SHALL BE STABILIZED WITH TEMPORARY GRASSING.

THE CONTRACTOR SHALL MAINTAIN ALL TEMPORARY SEDIMENT TRAPS AND EROSION CONTROL MEASURES UNTIL PERMANENT GROUND COVER IS ESTABLISHED. SEDIMENT SHALL BE CLEANED OUT OF THE TRAPS WHEN IT REACHES THE CLEANOUT LEVEL AS INDICATED BY THE SILT DEPTH GAUGES.

STOCKPILED TOPSOIL SHALL BE APPLIED AT A MINIMUM THICKNESS OF 3 INCHES TO ALL FINAL GRADE SOIL SURFACES. IF SUFFICIENT TOPSOIL IS NOT AVAILABLE TO COVER ALL FINAL GRADE SURFACES, PREFERENCE SHALL BE GIVEN TO CUT AND FILL SLOPE AREAS.

AFTER CURBING, GRADED AGGREGATE BASE, AND PAVEMENT HAS BEEN INSTALLED, ALL INLET SEDIMENT TRAPS ON CATCH BASINS ALONG WITH ANY CURB INLETS SHALL BE REMOVED AND REPLACED WITH CURB FILTER INLET PROTECTION. SEE DETAILS FOR ADDITIONAL INFORMATION.

PERMANENT VEGETATION SHALL BE ESTABLISHED ON ALL ROADWAY AND PARKING SHOULDERS AS FINAL GRADE IS ACHIEVED BEHIND CURBS.

SEDIMENT AND EROSION CONTROL MEASURES SHALL BE CHECKED AFTER EACH RAIN EVENT. EACH DEVICE IS TO BE MAINTAINED OR REPLACED IF SEDIMENT ACCUMULATION HAS REACHED ONE HALF THE CAPACITY OF THE DEVICE. ADDITIONAL DEVICES SHALL BE INSTALLED IF NEW CHANNELS HAVE DEVELOPED.

THE CONSTRUCTION EXIT SHALL BE MAINTAINED IN A CONDITION WHICH WILL PREVENT TRACKING OR FLOWING OF MUD ONTO PUBLIC RIGHT-OF-WAY UNTIL REPLACED WITH PERMANENT PAVING. THIS MAY REQUIRE PERIODIC TOP DRESSING WITH A 1' TO 3" LAYER OF STONE, AS CONDITIONS DEMAND. ALL MATERIALS SPILLED, DROPPED, WASHED, OR TRACKED FROM VEHICLES ONTO PUBLIC ROADWAYS OR INTO STORM DRAINS MUST BE REMOVED IMMEDIATELY.

CONTRACTOR SHALL INSPECT CONTROL MEASURES AT THE END OF EACH WORKING DAY TO ENSURE MEASURES ARE FUNCTIONING PROPERLY.

EROSION CONTROL MEASURES SHALL BE MAINTAINED AT ALL TIMES. IF FULL IMPLEMENTATION OF THE APPROVED PLAN DOES NOT PROVIDE FOR EFFECTIVE EROSION CONTROL, AS A PART OF THE SCOPE OF THIS PROJECT, ADDITIONAL EROSION AND SEDIMENT CONTROL MEASURES SHALL BE IMPLEMENTED TO CONTROL OR TREAT THE SEDIMENT SOURCE AS DIRECTED BY THE ON SITE INSPECTOR OR THE DESIGN PROFESSIONAL.

FAILURE TO INSTALL, OPERATE, OR MAINTAIN ALL EROSION CONTROL MEASURES WILL RESULT IN ALL CONSTRUCTION BEING STOPPED ON THE JOB UNTIL SUCH MEASURES ARE CORRECTED BACK TO THE APPROVED EROSION CONTROL PLAN.

THE SITE CONTRACTOR SHALL BE RESPONSIBLE FOR MAINTENANCE OF ALL EROSION CONTROL MEASURES INCLUDING REPLACING OR REPAIRING ANY DAMAGED DEVICES DUE TO ANY CONSTRUCTION ACTIVITY BY OTHERS.

WHEN THE ENTIRE SITE HAS UNDERGONE FINAL STABILIZATION AND ALL STORMWATER DISCHARGES ASSOCIATED WITH CONSTRUCTION ACTIVITY THAT ARE AUTHORIZED BY THIS PERMIT HAVE CEASED, CONTRACTOR SHALL SUBMITT A NOTICE ON TERMINATION (NOT).

UPON COMPLETION OF THE CONSTRUCTION ACTIVITIES AND FINAL STABILIZATION, THE CONTRACTOR SHALL REMOVE ALL TEMPORARY EROSION BMP'S UPON APPROVAL OF THE NOTICE OF TERMINATION (N.O.T.) AND DISPOSE OF THEM UNLESS NOTED ON PLAN.

<u>CRITICAL WORK ZONE EROSION CONTROL NOTES:</u>

SHADED AREAS SHOWN ON THE INTERMEDIATE PHASE EROSION CONTROL PLAN REPRESENT CRITICAL WORK ZONES. AT THE END OF EACH WORK DAY ALL TEMPORARY SLOPES 3H:1V OR STEEPER AND HIGHER THAN 5 FEET SHALL RECEIVE SURFACE ROUGHENING WHEN INCLEMENT WEATHER IS FORECAST FOR THE PERIOD BEFORE WORK WILL RESUME.

<u>SURVEY INFORMATION</u>

TOPOGRAPHIC INFORMATION BASED ON A SURVEY PERFORMED BY AMEC AND SUPPLEMENTED WITH GIS CONTOURS FROM CHEROKEE COUNTY GIS.

FLOOD INSURANCE RATE MAP, COMMUNITY NUMBER 13057C0227D, DATED SEPTEMBER 29, 2006, SHOWS NO PORTION OF THE SITE AND THE SURROUNDING AREA TO BE IN FLOOD ZONE AREA. THE SITE PROJECT LIMITS SHOWN IN THESE PLANS ARE OUTSIDE OF THE FLOOD ZONE.

<u>RUNOFF COEFFICIENT</u>

- WEIGHTED PRE CONSTRUCTION CN CURVE NUMBER: 55
- WEIGHTED POST CONSTRUCTION CN CURVE NUMBER: 71

SEE HYDROLOGY CALCULATIONS REPORT 4000-NICHE COLUMBARIUM GEORGIA NATIONAL CEMETERY PREPARED BY AMEC ENVIRONMENT & INFRASTRUCTURE, INC., DATED MAY 2015 FOR ADDITIONAL INFORMATION.

<u>SOIL TYPES</u>

THE NCRS SOIL TYPES AREA HIE AND TbF

SOIL DISTURBING ACTIVITIES INCLUDE:

- INSTALLING A STABILIZED CONSTRUCTION EXIT, PERIMETER SILT FENCE, SEDIMENT TRAP AND OTHER EROSION AND SEDIMENT CONTROLS
- CLEARING AND GRUBBING
- EXCAVATION FOR UTILITIES AND GRADING
- ROADWAY CONTRUCTION
- COLUMBARIUM CONSTRUCTION
- SITE STABILIZATION
- PREPARATION FOR FINAL PLANTING AND SEEDING
- COMPLETING OF ON-SITE STABILIZATION

<u>SEQUENCE OF MAJOR ACTIVITIES</u>

SEE CONSTRUCTION SCHEDULE

<u>NAME OF RECEIVING WATERS</u>

A TRIBUTARY OF SHOALS CREEK

<u>EROSION AND SEDIMENT CONTROLS</u>

ALL PERIMETER SILT FENCES AND CONSTRUCTION EXITS SHALL BE IN PLACE PRIOR TO ANY LAND DISTURBING ACTIVITIES.

EXISTING VEGETATION SHALL BE LEFT IN PLACE UNTIL SUCH TIME THAT LAND DISTURBING ACTIVITIES ARE TO TAKE PLACE UPON THAT PORTION OF THE SITE. WHEN CONSTRUCTION ACTIVITIES HAVE CEASED IN AN AREA, THAT AREA SHALL BE STABILIZED WITHIN 14 DAYS. IF THE AREA IS NOT YET TO FINAL GRADE, IT SHALL BE MULCHED. IF THE AREA IS TO FINAL GRADE AND WILL EVENTUALLY CONTAIN SITE IMPROVEMENTS SUCH AS THE STRUCTURES OR SIDEWALKS, IT SHALL BE TEMPORARY SEEDED. AREAS BROUGHT TO FINAL GRADE THAT WILL REMAIN PERVIOUS ARE TO BE PERMANENTLY SEEDED. ALLOWABLE EXCEPTIONS FROM THE NPDES GENERAL PERMIT, GAR 100001, ARE NOTED BELOW.

WHERE THE INITIATION OF STABILIZATION MEASURES BY THE 14TH DAY AFTER CONSTRUCTION ACTIVITY TEMPORARILY OR PERMANENTLY CEASE IS PRECLUDED BY SNOW COVER OR OTHER ADVERSE WEATHER CONDITIONS, STABILIZATION MEASURES SHALL BE INITIATED AS SOON AS PRACTICABLE.

WHERE CONSTRUCTION ACTIVITY WILL RESUME ON A PORTION OF THE SITE WITHIN 21 DAYS FROM WHEN ACTIVITIES CEASED, (E.G. THE TOTAL TIME PERIOD THAT CONSTRUCTION ACTIVITY IS TEMPORARILY CEASED IS LESS THAN 21 DAYS) THEN STABILIZATION MEASURES DO NOT HAVE TO BE INITIATED ON THAT PORTION OF THE SITE BY THE 14TH DAY AFTER CONSTRUCTION ACTIVITY TEMPORARILY CEASED.

PLEASE REFER TO THE CONSTRUCTION SCHEDULE FOR THE LAND DISTURBANCE CONSTRUCTION SCHEDULE AND TEMPORARY AND PERMANENT GRASSING SCHEDULES.

STORMWATER FROM THIS DEVELOPMENT WILL BE ROUTED VIA SURFACE SHEET FLOW, AND STORMWATER PIPING, TO A PROPOSED STORMWATER DETENTION VAULT. THE STORMWATER DISCHARGE FROM THE VAULT WILL BE DIRECTLY PIPED INTO THE EXISTING STORMWATER CONVEYING SYSTEM THAT DISCHARGES INTO AN EXISTING DETENTION POND PROR TO REACHING A TRIBUTARY OF SHOALS CREEK.

<u>OTHER CONTROLS</u>

NO WASTE SHALL BE DISPOSED OF INTO STORMWATER INLETS OR WATERS OF THE STATE

<u>WASTE MATERIALS</u>

ALL WASTE MATERIALS SHALL BE COLLECTED AND STORED IN A SECURELY LIDDED METAL DUMPSTER. THE DUMPSTER SHALL MEET ALL SOLID WASTE MANAGEMENT REGULATIONS. ALL TRASH AND CONSTRUCTION DEBRIS FROM THE SITE SHALL BE DEPOSITED IN THE DUMPSTER. THE DUMPSTER SHALL BE EMPTIED A MINIMUM OF ONCE PER WEEK OR MORE OFTEN IF NECESSARY, AND TRASH SHALL BE HAULED AS REQUIRED BY LOCAL REGULATIONS. NO CONSTRUCTION WASTE SHALL BE BURIED ONSITE.

ALL PERSONNEL SHALL BE INSTRUCTED ON PROPER PROCEDURES FOR WASTE DISPOSAL. A NOTICE STATING THESE PRACTICES SHALL BE POSTED AT THE JOBSITE AND THE CONTRACTOR IS RESPONSIBLE FOR SEEING THAT THESE PROCEDURES ARE FOLLOWED.

<u>HAZARDOUS WASTES</u>

ALL HAZARDOUS WASTE MATERIALS SHALL BE DISPOSED OF IN THE MANNER SPECIFIED BY LOCAL, STATE, AND/OR FEDERAL REGULATIONS AND BY THE MANUFACTURER OF SUCH PRODUCTS. THE JOB SITE SUPERINTENDENT, WHO WILL ALSO BE RESPONSIBLE FOR SEEING THAT THESE PRACTICES ARE FOLLOWED, SHALL INSTRUCT SITE PERSONNEL IN THESE PRACTICES. MATERIAL SAFETY DATA SHEETS (MSDS) FOR EACH SUBSTANCE WITH HAZARDOUS PROPERTIES THAT IS USED ON THE JOB SITE SHALL BE OBTAINED AND USED FOR THE PROPER MANAGEMENT OF POTENTIAL WASTES THAT MAY RESULT FROM THESE PRODUCTS. AN MSDS SHALL BE POSTED IN THE IMMEDIATE AREA WHERE SUCH PRODUCT IS STORED AND/OR USED AND ANOTHER COPY OF EACH MSDS SHALL BE MAINTAINED IN THE ESPC PLAN FILE AT THE JOB SITE CONSTRUCTION TRAILER OFFICE. EACH EMPLOYEE WHO MUST HANDLE A SUBSTANCE WITH HAZARDOUS PROPERTIES SHALL BE INSTRUCTED ON THE USE OF MSDS SHEETS AND THE SPECIFIC INFORMATION IN THE APPLICABLE MSDS FOR THE PRODUCT HE/SHE IS USING, PARTICULARLY REGARDING SPILL CONTROL TECHNIQUES.

THE CONTRACTOR SHALL IMPLEMENT THE SPILL PREVENTION CONTROL AND COUNTERMEASURES (SPCC) PLAN FOUND WITHIN THIS ESPC PLAN AND SHALL TRAIN ALL PERSONNEL IN THE PROPER CLEANUP AND HANDLING OF SPILLED MATERIALS. NO SPILLED HAZARDOUS MATERIALS OR HAZARDOUS WASTES SHALL BE ALLOWED TO COME IN CONTACT WITH STORMWATER DISCHARGES. IF SUCH CONTACT OCCURS, THE STORMWATER DISCHARGE SHALL BE CONTAINED ONSITE UNTIL APPROPRIATE MEASURES IN COMPLIANCE WITH STATE AND FEDERAL REGULATIONS ARE TAKEN TO DISPOSE OF SUCH CONTAMINATED STORMWATER. IT SHALL BE THE RESPONSIBILITY OF THE JOB SITE SUPERINTENDENT TO PROPERLY TRAIN ALL PERSONNEL IN THE USE OF THE SPCC PLAN.

<u>SANITARY WASTES</u>

A MINIMUM OF ONE PORTABLE SANITARY UNIT SHALL BE PROVIDED FOR EVERY TWENTY (20) WORKERS ON THE SITE. ALL SANITARY WASTE SHALL BE COLLECTED FROM THE PORTABLE UNITS A MINIMUM OF ONE TIME PER WEEK BY A LICENSED PORTABLE FACILITY PROVIDER IN COMPLETE COMPLIANCE WITH LOCAL AND STATE REGULATIONS.

ALL SANITARY WASTE UNITS SHALL BE LOCATED IN AN AREA WHERE THE LIKELIHOOD OF THE UNIT CONTRIBUTING TO STORM WATER DISCHARGE IS NEGLIGIBLE. ADDITIONAL CONTAINMENT BMP'S MUST BE IMPLEMENTED, SUCH AS GRAVEL BAGS OR SPECIALLY DESIGNED PLASTIC SKID CONTAINERS AROUND THE BASE, TO PREVENT WASTES FROM CONTRIBUTING TO STORM WATER DISCHARGES. THE LOCATION OF SANITARY WASTE UNITS MUST BE IDENTIFIED ON THE EROSION CONTROL PLAN INTERMEDIATE PHASE BY THE CONTRACTOR ONCE THE LOCATIONS HAVE BEEN DETERMINED.

<u>OFFSITE VEHICLE TRACKING</u>

A STABILIZED CONSTRUCTION EXIT HAS BEEN PROVIDED TO HELP REDUCE VEHICLE TRACKING OF SEDIMENT. SEE SHEET C-103 AND C-507 FOR CONSTRUCTION EXIT LOCATION AND DETAIL. THE PAVED STREET ADJACENT TO THE SITE EXIT SHALL BE INSPECTED DAILY FOR TRACKING OF MUD, DIRT, OR ROCK. DUMP TRUCKS HAULING MATERIAL FROM THE CONSTRUCTION SITE SHALL HAVE LOADS COVERED WITH A TARPAULIN.

<u>INVENTORY FOR POLLUTION PREVENTION PLAN</u>

THE FOLLOWING MATERIALS ARE EXPECTED ONSITE DURING CONSTRUCTION: CONCRETE PRODUCTS, NATURAL STONES, ASPHALT, PETROLEUM BASED FUELS AND LUBRICANTS FOR EQUIPMENT, TAR, LUMBER, FLOOR COVERINGS, ELECTRICAL WIRE AND FIXTURES, PAINTS/STAINS/FINISHING TREATMENTS, PAINTS, PAINT SOLVENTS, ADDITIVES FOR SOIL STABILIZATION, CLEANING SOLVENTS, PESTICIDES, FERTILIZERS, HERBICIDES, CRUSHED STONE, PLASTIC AND METAL PIPES.

<u>SPILL PREVENTION</u>

PRACTICES SUCH AS GOOD HOUSEKEEPING, PROPER HANDLING OF HAZARDOUS PRODUCTS AND PROPER SPILL CONTROL PRACTICES SHALL BE FOLLOWED TO REDUCE THE RISK OF SPILLS AND SPILLS FROM DISCHARGING INTO STORM WATER RUNOFF.

<u>GOOD HOUSEKEEPING</u>

QUANTITIES OF PRODUCTS STORED ONSITE SHALL BE LIMITED TO THE AMOUNT NEEDED FOR THE JOB.

1. PRODUCTS AND MATERIALS SHALL BE STORED IN A NEAT, ORDERLY MANNER IN APPROPRIATE CONTAINERS PROTECTED FROM RAINFALL, WHERE POSSIBLE.
2. PRODUCTS SHALL BE KEPT IN THEIR ORIGINAL CONTAINERS WITH MANUFACTURER LABELS LEGIBLE AND VISIBLE.
3. PRODUCT MIXING, DISPOSAL AND DISPOSAL OF PRODUCT CONTAINERS SHALL BE ACCORDING TO THE MANUFACTURER'S RECOMMENDATIONS.
4. THE CONTRACTOR SHALL INSPECT SUCH MATERIALS TO ENSURE PROPER USE, STORAGE AND DISPOSAL.

<u>PRODUCT SPECIFIC PRACTICES</u>

PETROLEUM BASED PRODUCTS – CONTAINERS FOR PRODUCTS SUCH AS FUELS, LUBRICANTS AND TARS SHALL BE INSPECTED DAILY FOR LEAKS AND SPILLS. THIS INCLUDES ON-SITE VEHICLE AND MACHINERY DAILY INSPECTIONS AND REGULAR PREVENTATIVE MAINTENANCE OF SUCH EQUIPMENT. EQUIPMENT MAINTENANCE AREAS SHALL BE LOCATED AWAY FROM STATE WATER, NATURAL DRAINS AND STORM WATER DRAINAGE INLETS. IN ADDITION, TEMPORARY FUELING TANKS SHALL HAVE A SECONDARY CONTAINMENT LINER TO PREVENT/MINIMIZE SITE CONTAMINATION.

DISCHARGE OF OILS, FUELS AND DISPOSAL AS REQUIRED BY LOCAL AND STATE REGULATIONS.

PAINTS/FINISHES/SOLVENTS – ALL PRODUCTS SHALL BE STORED IN TIGHTLY SEALED ORIGINAL CONTAINERS WHEN NOT IN USE. EXCESS PRODUCT SHALL NOT BE DISCHARGED TO THE STORM WATER COLLECTION SYSTEM. EXCESS PRODUCT, MATERIALS USED WITH THESE PRODUCTS AND PRODUCT CONTAINERS SHALL BE DISPOSED OF ACCORDING TO MANUFACTURER'S SPECIFICATIONS AND RECOMMENDATIONS.

CONCRETE TRUCK WASHING – BERMED CONTAINMENT AREAS SHALL BE ESTABLISHED FOR CONCRETE TRUCKS TO WASH DOWN TOOLS, CONCRETE MIXER CHUTES, HOPPERS AND THE REAR OF THE VEHICLES. WASH OUT OF THE DRUM AT THE CONSTRUCTION SITE IS PROHIBITED.

FERTILIZER/HERBICIDES – THESE PRODUCTS SHALL BE APPLIED AT RATES THAT DO NOT EXCEED THE MANUFACTURER'S SPECIFICATIONS OR ABOVE THE GUIDELINES SET FORTH IN THE CROP ESTABLISHMENT OR IN THE GSWCC MANUAL FOR EROSION AND SEDIMENT CONTROL IN GEORGIA. ANY STORAGE OF THESE MATERIALS SHALL BE UNDER ROOF IN SEALED CONTAINERS.

BUILDING MATERIALS – NO BUILDING OR CONSTRUCTION MATERIALS SHALL BE BURIED OR DISPOSED OF ONSITE. ALL SUCH MATERIAL SHALL BE DISPOSED OF IN PROPER WASTE DISPOSAL PROCEDURES.

<u>SOIL CLEANUP AND CONTROL PRACTICES</u>

- LOCAL, STATE, AND MANUFACTURER'S RECOMMENDED METHODS FOR SPILL CLEANUP SHALL BE CLEARLY POSTED AND PROCEDURES SHALL BE MADE AVAILABLE TO SITE PERSONNEL.
- MATERIAL AND EQUIPMENT NECESSARY FOR SPILL CLEANUP SHALL BE KEPT IN THE MATERIAL STORAGE AREAS. TYPICAL MATERIALS AND EQUIPMENT INCLUDES, BUT IS NOT LIMITED TO, BROOMS, DUSTPANS, MOPS, RAGS, GLOVES, GOGGLES, CAT LITTER, SAND, SAWDUST, AND PROPERLY LABELED PLASTICS AND METAL WASTE CONTAINERS.
- SPILL PREVENTION PRACTICES AND PROCEDURES SHALL BE REVIEWED AFTER A SPILL AND ADJUSTED AS NECESSARY TO PREVENT FUTURE SPILLS.
- ALL SPILLS SHALL BE CLEANED UP IMMEDIATELY UPON DISCOVERY. ALL SPILLS SHALL BE REPORTED AS REQUIRED BY LOCAL, STATE AND FEDERAL REGULATIONS.
- FOR SPILLS THAT IMPACT SURFACE WATER (LEAVE A SHEEN ON SURFACE), THE NATIONAL RESPONSE CENTER (NRC) SHALL BE CONTACTED WITHIN 24 HOURS AT 1-800-424-8802.
- FOR SPILLS OF AN UNKNOWN AMOUNT, THE NATIONAL RESPONSE CENTER (NRC) SHALL BE CONTACTED WITHIN 24 HOURS AT 1-800-424-8802.
- FOR SPILLS GREATER THAN 25 GALLONS AND NO SURFACE WATER IMPACTS, THE GEORGIA EPD SHALL BE CONTACTED WITHIN 24 HOURS.
- FOR SPILLS LESS THAN 25 GALLONS AND NO SURFACE WATER IMPACTS, THE SPILL SHALL BE CLEANED UP AND LOCAL AGENCIES SHALL BE CONTACTED AS REQUIRED.

THE CONTRACTOR SHALL NOTIFY THE LICENSED PROFESSIONAL WHO PREPARED THIS PLAN IF MORE THAN 1320 GALLONS OF PETROLEUM IS STORED ONSITE (THIS INCLUDES CAPACITIES OF EQUIPMENT) OR IF ANY ONE PIECE OF EQUIPMENT HAS A CAPACITY GREATER THAN 660 GALLONS. IF EITHER OF THESE TWO CONDITIONS OCCUR, THE CONTRACTOR SHALL PREPARE A SPILL PREVENTION, CONTROL, AND COUNTERMEASURES PLAN (SPCC) PREPARED BY A LICENSED PROFESSIONAL.

<u>INSPECTIONS</u>

PRIMARY PERMITTEE.

1. EACH DAY WHEN ANY TYPE OF CONSTRUCTION ACTIVITY HAS TAKEN PLACE AT A PRIMARY PERMITTEE'S SITE, CERTIFIED PERSONNEL PROVIDED BY THE PRIMARY PERMITTEE SHALL INSPECT: (A) ALL AREAS AT THE PRIMARY PERMITTEE'S SITE WHERE PETROLEUM PRODUCTS ARE STORED, USED, OR HANDLED FOR SPILLS AND LEAKS FROM VEHICLES AND EQUIPMENT; (B) ALL LOCATIONS AT THE PRIMARY PERMITTEE'S SITE WHERE VEHICLES ENTER OR EXIT THE SITE FOR EVIDENCE OF OFF-SITE SEDIMENT TRACKING; THESE INSPECTIONS MUST BE CONDUCTED UNTIL A NOTICE OF TERMINATION IS SUBMITTED.
2. MEASURE RAINFALL ONCE EVERY 24-HOURS EXCEPT ANY NON-WORKING SATURDAY, NON-WORKING SUNDAY, AND NON-WORKING FEDERAL HOLIDAY UNTIL A NOTICE OF TERMINATION IS SUBMITTED. MEASUREMENT OF RAINFALL MAY BE SUSPENDED IF ALL AREAS OF THE SITE HAVE UNDERGONE FINAL STABILIZATION OR ESTABLISHED A CROP OF ANNUAL VEGETATION AND A SEEDING OF TARGET PERENNIALS APPROPRIATE FOR THE REGION.
3. CERTIFIED PERSONNEL (PROVIDED BY THE PRIMARY PERMITTEE) SHALL INSPECT THE FOLLOWING AT LEAST ONCE EVERY SEVEN (7) CALENDAR DAYS AND WITHIN 24 HOURS OF THE END OF A STORM THAT IS 0.5 INCHES RAINFALL OR GREATER (UNLESS SUCH STORM ENDS AFTER 5:00 PM ON ANY FRIDAY OR ON ANY NON-WORKING SATURDAY, NON WORKING SUNDAY OR ANY NON-WORKING FEDERAL HOLIDAY IN WHICH CASE THE INSPECTION SHALL BE COMPLETED BY THE END OF THE NEXT BUSINESS DAY AND/OR WORKING DAY, WHICHEVER OCCURS FIRST): (A) DISTURBED AREAS OF THE PRIMARY PERMITTEE'S CONSTRUCTION SITE; (B) AREAS USED BY THE PRIMARY PERMITTEE FOR STORAGE OF MATERIALS THAT ARE EXPOSED TO PRECIPITATION; AND (C) STRUCTURAL CONTROL MEASURES. EROSION AND SEDIMENT CONTROL MEASURES IDENTIFIED IN THE PLAN APPLICABLE TO THE PRIMARY PERMITTEE'S SITE SHALL BE OBSERVED TO ENSURE THAT THEY ARE OPERATING CORRECTLY. WHERE DISCHARGE LOCATIONS OR POINTS ARE ACCESSIBLE, THEY SHALL BE INSPECTED TO ASCERTAIN WHETHER EROSION CONTROL MEASURES ARE EFFECTIVE IN PREVENTING SIGNIFICANT IMPACTS TO RECEIVING WATER(S). FOR AREAS OF A SITE THAT HAVE UNDERGONE FINAL STABILIZATION OR ESTABLISHED A CROP OF ANNUAL VEGETATION AND A SEEDING OF TARGET PERENNIALS APPROPRIATE FOR THE REGION, THE PERMITTEE MUST COMPLY WITH PART IV.D.4.a (4). THESE INSPECTIONS MUST BE CONDUCTED UNTIL A NOTICE OF TERMINATION IS SUBMITTED.
4. CERTIFIED PERSONNEL (PROVIDED BY THE PRIMARY PERMITTEE) SHALL INSPECT AT LEAST ONCE PER MONTH DURING THE TERM OF THIS PERMIT (I.E. UNTIL A NOTICE OF TERMINATION IS RECEIVED BY EPD) THE AREAS OF THE SITE THAT HAVE UNDERGONE FINAL STABILIZATION OR ESTABLISHED A CROP OF ANNUAL VEGETATION AND A SEEDING OF TARGET PERENNIALS APPROPRIATE FOR THE REGION. THESE AREAS SHALL BE INSPECTED FOR EVIDENCE OF, OR THE POTENTIAL FOR, POLLUTANTS ENTERING THE DRAINAGE SYSTEM AND THE RECEIVING WATER(S). EROSION AND SEDIMENT CONTROL MEASURES IDENTIFIED IN THE PLAN SHALL BE OBSERVED TO ENSURE THAT THEY ARE OPERATING CORRECTLY. WHERE DISCHARGE LOCATIONS OR POINTS ARE ACCESSIBLE, THEY SHALL BE INSPECTED TO ASCERTAIN WHETHER EROSION CONTROL MEASURES ARE EFFECTIVE IN PREVENTING SIGNIFICANT IMPACTS TO RECEIVING WATER(S).
5. BASED ON THE RESULTS OF EACH INSPECTION, THE SITE DESCRIPTION AND THE POLLUTION PREVENTION AND CONTROL MEASURES IDENTIFIED IN THE EROSION, SEDIMENTATION AND POLLUTION CONTROL PLAN, THE PLAN SHALL BE REVISED AS APPROPRIATE NOT LATER THAN SEVEN (7) CALENDAR DAYS FOLLOWING EACH INSPECTION. IMPLEMENTATION OF SUCH CHANGES SHALL BE MADE AS SOON AS PRACTICAL BUT IN NO CASE LATER THAN SEVEN (7) CALENDAR DAYS FOLLOWING EACH INSPECTION.
6. A REPORT (I.E., NOT INDIVIDUAL INSPECTION FORMS) SUMMARIZING THE SCOPE OF EACH INSPECTION AND THE NAME(S) OF PERSONNEL MAKING EACH INSPECTION, THE DATE(S) OF EACH INSPECTION, MAJOR OBSERVATIONS RELATING TO THE IMPLEMENTATION OF THE EROSION, SEDIMENTATION AND POLLUTION CONTROL PLAN AND ACTIONS TAKEN IN ACCORDANCE WITH PART V.A.6.A.(4) OF THE NPDES PERMIT SHALL BE MADE AND RETAINED AT THE SITE OR BE READILY AVAILABLE AT A DESIGNATED ALTERNATE LOCATION UNTIL THE ENTIRE SITE OR THAT PORTION OF THE CONSTRUCTION PROJECT THAT HAS BEEN PHASED HAS UNDERGONE FINAL STABILIZATION AND A NOTICE OF TERMINATION IS SUBMITTED TO EPD. SUCH REPORTS SHALL IDENTIFY ANY INCIDENTS OF NONCOMPLIANCE. WHERE THE REPORT DOES NOT IDENTIFY ANY INCIDENTS OF NON-COMPLIANCE, THE REPORT SHALL CONTAIN A CERTIFICATION THAT THE FACILITY IS IN COMPLIANCE WITH ACCORDANCE WITH PART V.G. OF THE NPDES PERMIT.

SHOULD THE INSPECTION REVEAL ANY DEFICIENCIES, A COPY OF THE "EROSION & SEDIMENTATION INSPECTION AND MAINTENANCE REPORT" SHALL BE SENT TO:

OWNER/DEVELOPER: GEORGIA NATIONAL CEMETERY ATTN: T.B.D.
1080 VETERANS CEMETERY ROAD
CANTON, GEORGIA 30114

BID DOCUMENTS

Revisions	Date

PRIME:

amec foster wheeler
AMEC FOSTER WHEELER
ENVIRONMENT & INFRASTRUCTURE
1075 BIG SHANTY ROAD NW,
SUITE 100
KENNESAW, GA. 30144
(770) 421-3400
AMEC PROJECT: 6166-15-0011

MEP ENGINEER:

GEORGIA REGISTERED PROFESSIONAL ENGINEER No. 15556 JAMES L. STUDER 28 Oct 15

IRRIGATION DESIGNER:

Irrigation Consultant Services
2231 Weatherstone Circle
Conyers, GA 30094
(770) 929-0884, fax (770) 760-8025

DEPARTMENT OF VETERANS AFFAIRS · UNITED STATES OF AMERICA

NATIONAL CEMETERY ADMINISTRATION

Drawing Title	Project Title	Date
EROSION & SEDIMENT CONTROL NOTES	4000 NICHE COLUMBARIUM GEORGIA NATIONAL CEMETERY	23 OCTOBER 2015
		Project No. 922CM3005
Approved: Director, Technical Support Service	Building Number / Checked / Drawn	DRAWING NO. C-601
Approved: Chief, Architectual & Engineering Division	Location: 1080 VETERANS CEMETERY RD, CANTON, GA 30114	Sheet 24 Of 31

MAINTENANCE & INSPECTION OF EROSION & SEDIMENT CONTROLS

MAINTENANCE

THE FOLLOWING BEST MANAGEMENT PRACTICE MAINTENANCE CRITERIA ARE TAKEN FROM THE "MANUAL FOR EROSION AND SEDIMENT CONTROL IN GEORGIA", FIFTH EDITION.

CONSTRUCTION EXITS SHALL BE MAINTAINED IN A CONDITION THAT WILL PREVENT TRACKING OR FLOW OF MUD ONTO PUBLIC RIGHTS-OF-WAY. THIS MAY REQUIRE PERIODIC TOP DRESSING WITH 1.5 – 3.5 INCH STONE, AS CONDITIONS DEMAND, AND REPAIR AND/OR CLEANOUT OF ANY STRUCTURE TO TRAP SEDIMENT. ALL MATERIALS SPILLED, DROPPED, WASHED, OR TRACKED FROM VEHICLES OR SITE ONTO ROADWAYS OR INTO STORM DRAINS MUST BE REMOVED IMMEDIATELY.

SEDIMENT BASINS SHALL BE KEPT CLEAR OF TRASH AND DEBRIS. THIS WILL REQUIRE CONTINUOUS MONITORING AND MAINTENANCE, WHICH INCLUDES SEDIMENT REMOVAL WHEN ONE-THIRD OF THE SEDIMENT STORAGE CAPACITY HAS BEEN LOST.

SEDIMENT SHALL BE REMOVED FROM SILT FENCES ONCE IT HAS ACCUMULATED TO ONE-HALF THE ORIGINAL HEIGHT OF THE BARRIER. FILTER FABRIC SHALL BE REPLACED WHENEVER IT HAS DETERIORATED TO SUCH AN EXTENT THAT THE EFFECTIVENESS OF THE FABRIC IS REDUCED (APPROXIMATELY SIX MONTHS).

SEDIMENT SHALL BE REMOVED FROM SEDIMENT TRAPS WHEN THE SEDIMENT HAS ACCUMULATED TO ONE-HALF THE HEIGHT OF THE TRAP. SEDIMENT SHALL BE REMOVED FROM CURB INLET PROTECTION IMMEDIATELY. FOR EXCAVATED INLET SEDIMENT TRAPS, SEDIMENT SHALL BE REMOVED WHEN ONE-HALF OF THE SEDIMENT STORAGE CAPACITY HAS BEEN LOST TO SEDIMENT ACCUMULATION.

SEDIMENT SHALL NOT BE WASHED INTO THE INLET. IT SHALL BE REMOVED FROM THE SEDIMENT TRAP AND DISPOSED OF AND STABILIZED SO THAT IT WILL NOT RE-ENTER THE INLET.

WHEN THE CONTRIBUTING DRAINAGE AREA HAS BEEN PERMANENTLY STABILIZED, ALL MATERIALS AND ANY SEDIMENT SHALL BE REMOVED, AND EITHER SALVAGED OR DISPOSED OF PROPERLY. THIS DISTURBED AREA SHALL BE BROUGHT TO PROPER GRADE, THEN SMOOTHED AND COMPACTED. APPROPRIATELY STABILIZE ALL DISTURBED AREAS AROUND THE INLET.

REPAIR ALL DAMAGES CAUSED TO SEDIMENT BASINS BY SOIL EROSION OR CONSTRUCTION EQUIPMENT AT OR BEFORE THE END OF EACH WORKING DAY. SEDIMENT SHALL BE REMOVED FROM THE PONDS WHEN IT REACHES THE SPECIFIED ELEVATION. SEDIMENT SHALL NOT ENTER ADJACENT STREAMS OR DRAINAGE WAYS DURING SEDIMENT REMOVAL OR DISPOSAL. THE SEDIMENT SHALL NOT BE DEPOSITED DOWNSTREAM FROM THE EMBANKMENT, ADJACENT TO A STREAM OR FLOODPLAIN.

INSPECT RIPRAP OUTLET STRUCTURES AFTER HEAVY RAINS TO SEE IF ANY EROSION AROUND OR BELOW THE RIPRAP HAS TAKEN PLACE OR IF STONES HAVE BEEN DISLODGED. IMMEDIATELY MAKE ALL NEEDED REPAIRS TO PREVENT FURTHER DAMAGE.

ROUGHENED AREAS SHALL BE SEEDED AND MULCHED AS SOON AS POSSIBLE TO OBTAIN OPTIMUM SEED GERMINATION AND SEEDING GROWTH.

MULCH OR TEMPORARY SEEDING SHALL BE APPLIED TO ALL EXPOSED AREAS WITHIN 14 DAYS OF DISTURBANCE. MULCH CAN BE USED AS A SINGULAR EROSION CONTROL DEVICE FOR UP TO SIX MONTHS, BUT IT SHALL BE APPLIED AT THE APPROPRIATE DEPTH, DEPENDING ON THE MATERIAL USED, ANCHORED, AND HAVE A CONTINUOUS 90% COVER OR GREATER OF THE SOIL SURFACE. MAINTENANCE SHALL BE REQUIRED TO MAINTAIN APPROPRIATE DEPTH AND 90% COVER. TEMPORARY VEGETATION MAY BE EMPLOYED INSTEAD OF MULCH IF THE AREA WILL REMAIN UNDISTURBED FOR LESS THAN SIX MONTHS. IF AN AREA WILL REMAIN UNDISTURBED FOR GREATER THAN SIX MONTHS, PERMANENT VEGETATION TECHNIQUES SHALL BE EMPLOYED.

PERMANENT VEGETATION SHALL BE APPLIED IMMEDIATELY TO ROUGH GRADED AREAS THAT WILL BE UNDISTURBED FOR LONGER THAN SIX MONTHS. THIS PRACTICE OR SODDING SHALL BE APPLIED IMMEDIATELY TO ALL AREAS AT FINAL GRADE. FINAL STABILIZATION MEANS THAT ALL SOIL DISTURBING ACTIVITIES AT THE SITE HAVE BEEN COMPLETED, AND THAT FOR UNPAVED AREAS AND AREAS NOT COVERED BY PERMANENT STRUCTURES, AT LEAST 70% OF THE SOIL SURFACE IS UNIFORMLY COVERED IN PERMANENT VEGETATION OR EQUIVALENT PERMANENT STABILIZATION MEASURES (SUCH AS THE USE OF RIP RAP, GABIONS, PERMANENT MULCHES AND GEOTEXTILES) HAVE BEEN EMPLOYED. PERMANENT VEGETATION SHALL CONSIST OF: PLANTED TREES, SHRUBS, PERENNIAL VINES; A CROP OF PERENNIAL VEGETATION APPROPRIATE FOR THE FINAL STABILIZATION APPLIES TO EACH PHASE OF CONSTRUCTION. UNTIL THIS STANDARD IS SATISFIED AND PERMANENT CONTROL MEASURES AND FACILITIES ARE OPERATIONAL, INTERIM STABILIZATION MEASURES AND TEMPORARY EROSION AND SEDIMENTATION CONTROL MEASURES SHALL NOT BE REMOVED.

STORMWATER SAMPLING

SAMPLE ANALYSIS

STORM WATER SAMPLES ARE TO BE ANALYZED IN ACCORDANCE WITH METHODOLOGY AND TEST PROCEDURES ESTABLISHED BY 40 CFR PART 136 AND THE GUIDANCE DOCUMENT TITLED "NPDES STORM WATER SAMPLING GUIDANCE DOCUMENT, EPA 833-B-92-001."

STORM WATER IS TO BE SAMPLED FOR NEPHELOMETRIC TURBIDITY UNIT (NTU) AT THE OUTFALL LOCATION(S). A DISCHARGE OF STORMWATER RUNOFF FROM DISTURBED AREAS WHERE BEST MANAGEMENT PRACTICES HAVE NOT BEEN PROPERLY DESIGNED, INSTALLED, AND MAINTAINED SHALL CONSTITUTE A SEPARATE VIOLATION FOR EACH DAY ON WHICH SUCH CONDITION RESULTS IN THE TURBIDITY OF THE DISCHARGE EXCEEDING 75, THE VALUE THAT WAS SELECTED FROM APPENDIX B IN PERMIT NO. GAR 100001. THE NTU IS BASED UPON THE SITE SIZE OF 1.29 ACRES FOR THE PROJECT SITE, THE SURFACE WATER DRAINAGE AREA OF LESS THAN 4.99 SQUARE MILES, AND RECEIVING WATER WHICH SUPPORTS WARM WATER(TROUT) FISHERIES.

SAMPLE TYPE

ALL SAMPLING SHALL BE COLLECTED BY "GRAB SAMPLES" AND THE ANALYSIS OF THESE SAMPLES MUST BE CONDUCTED IN ACCORDANCE WITH METHODOLOGY AND TEST PROCEDURES ESTABLISHED BY 40 CFR PART 136 (UNLESS OTHER TEST PROCEDURES HAVE BEEN APPROVED); THE GUIDANCE DOCUMENT TITLED "NPDES STORM WATER SAMPLING GUIDANCE DOCUMENT, EPA 833-B-92-001" AND GUIDANCE DOCUMENTS THAT MAY BE PREPARED BY THE EPD.

PER NPDES PERMIT, GAR 100001, "SAMPLE CONTAINERS SHALL BE LABELED PRIOR TO COLLECTING THE SAMPLES. SAMPLES SHALL BE WELL MIXED BEFORE TRANSFERRING TO A SECONDARY CONTAINER. LARGE MOUTH, WELL-CLEANED AND RINSED GLASS OR PLASTIC JARS SHALL BE USED FOR COLLECTING SAMPLES. THE JARS SHALL BE CLEANSED THOROUGHLY TO AVOID CONTAMINATION. MANUAL, AUTOMATIC OR RISING STAGE SAMPLING MAY BE UTILIZED."

SAMPLE POINTS

THERE SHALL BE ONE STORMWATER SAMPLING LOCATION POINT NUMBER 1. THE SAMPLING LOCATION IS AT THE OUTFALL OF THE EXSITING DETENTION POND, DOWNSTREAM OF THE PROJECT AREA. (SEE THIS SHEET FOR SAMPLING LOCATION MAP) PER NPDES PERMIT GAR 100001, FOR CONSTRUCTION ACTIVITIES, THE PRIMARY PERMITTEE MUST COMPLETE ALL SAMPLING ONCE THE TEMPORARY SEDIMENT TRAPS ARE REMOVED.

APPENDIX B WAS USED TO DETERMINE THE NTU UNITS ALLOWABLE FOR THIS PROJECT.

- CARE SHALL BE TAKEN TO AVOID STIRRING THE BOTTOM SEDIMENT IN THE RECEIVING WATER(S) OR IN THE OUTFALL STORM WATER CHANNEL.
- THE SAMPLING CONTAINER SHALL BE HELD SO THAT THE OPENING FACES UPSTREAM.
- THE SAMPLING SHALL BE KEPT FREE FROM FLOATING DEBRIS.
- THE PRIMARY PERMITTEES DOES NOT HAVE TO SAMPLE SHEET FLOW ONTO UNDISTURBED NATURAL AREAS OR AREAS STABILIZED BY THE PROJECT

SAMPLING FREQUENCY

STORM WATER SAMPLES SHALL BE TAKEN FOR THE FOLLOWING STORM EVENTS:

A. FOR EACH AREA OF THE SITE THAT DISCHARGES TO A RECEIVING STREAM, THE FIRST RAIN EVENT THAT REACHED OR EXCEEDS 0.5 INCH AND ALLOWS FOR MONITORING DURING NORMAL BUSINESS HOURS *(MONDAY THROUGH FRIDAY, 8:00 AM TO 5:00 PM AND SATURDAY 8:00 AM TO 5:00 PM WHEN CONSTRUCTION ACTIVITY IS BEING CONDUCTED BY THE PRIMARY PERMITTEE) THAT OCCURS AFTER ALL CLEARING AND GRUBBING OPERATIONS HAVE BEEN COMPLETED IN THE DRAINAGE AREA OF THE LOCATION SELECTED AS THE SAMPLING LOCATION;

B. IN ADDITION TO (A) ABOVE, EACH AREA OF THE SITE THAT DISCHARGES TO A RECEIVING STREAM, THE FIRST RAIN EVENT THAT REACHES OR EXCEEDS 0.5 INCH AND ALLOWS FOR MONITORING DURING NORMAL BUSINESS HOURS * THAT OCCURS EITHER 90 DAYS AFTER THE FIRST SAMPLING EVENT OR AFTER ALL MASS GRADING OPERATIONS HAVE BEEN COMPLETED IN THE DRAINAGE AREA OF THE LOCATION SELECTED AS THE SAMPLING LOCATION, WHICHEVER COMES FIRST;

C. AT THE TIME OF SAMPLING PERFORMED PURSUANT TO (A) AND (B) ABOVE, IF BMP'S IN ANY AREA OF THE SITE THAT DESIGNED, INSTALLED AND MAINTAINED, NO FURTHER ACTION IS REQUIRED. IF BMP'S IN ANY AREA OF THE SITE THAT DISCHARGES TO A RECEIVING STREAM ARE NOT PROPERLY DESIGNED, INSTALLED AND MAINTAINED, CORRECTIVE ACTION SHALL BE DEFINED AND IMPLEMENTED WITHIN 2 BUSINESS DAYS, AND TURBIDITY SAMPLING SHALL BE TAKEN FROM DISCHARGES FROM THAT AREA OF THE SITE FOR EACH SUBSEQUENT RAIN EVENT THAT REACHES OR EXCEEDS 0.5 INCH DURING NORMAL BUSINESS HOURS * UNTIL THE SELECTED TURBIDITY STANDARD IS ATTAINED, OR UNTIL POST-STORM EVENT INSPECTIONS DETERMINE THAT BMP'S ARE PROPERLY DESIGNED, INSTALLED AND MAINTAINED.

REPORTING

FOR MONTHS WHEN SAMPLY IS PERFORMED A SUMMARY OF THE MONITORING RESULTS SHALL BE SENT TO OWNER, EPD AND INSPECTOR BY THE 15TH OF EACH MONTH BY RETURN RECEIPT REQUESTED CERTIFIED MAIL (OR SIMILAR SERVICES). THE REPORT SUMMARY SHALL INCLUDE:

- THE DATE, EXACT PLACE, AND TIME OF SAMPLING OR MEASUREMENTS;
- THE NAME(S) OF THE INDIVIDUAL(S) WHO PERFORMED THE SAMPLING AND MEASUREMENTS'
- THE DATE(S) ANALYSES WERE PERFORMED;
- THE TIME(S) ANALYSES WERE INITIATED;
- THE NAME(S) OF THE INDIVIDUALS WHO PERFORMED THE ANALYSES'
- REFERENCE AND WRITTEN PROCEDURES, WHEN AVAILABLE, FOR THE ANALYTICAL TECHNIQUES OR METHODS USED. A QUALITY CONTROL/QUALITY ASSURANCE PROGRAM MUST BE INCLUDED IN THE WRITTEN PROCEDURE;
- THE RESULT OF SUCH ANALYSES, INCLUDING THE BENCH SHEETS, INSTRUMENT READOUTS, COMPUTER DISKS OR TAPES, ETC., USED TO DETERMINE THESE RESULTS.
- RESULTS WHICH EXCEED 1000 NTU SHALL BE REPORTED AS "EXCEEDS 1000 NTU"

REPORTING PERIODS ARE MONTHS DURING WHICH SAMPLES ARE TAKEN IN ACCORDANCE WITH THE NPDES GAR 100001. ADDRESSES ARE PROVIDED BELOW:

GOVERNING AGENCY: GEORGIA EPD
MOUNTAIN DISTRICT-CARTERSVILLE OFFICE
P.O. BOX 3250
CARTERSVILLE, GEORGIA 30120
770-387-4900

OWNER/DEVELOPER: GEORGIA NATIONAL CEMETERY ATTN: T.B.D.
1080 VETERANS CEMETERY ROAD
CANTON, GEORGIA 30114

COMPLIANCE WITH FEDERAL, STATE, AND LOCAL REGULATIONS

THE CONTRACTOR SHALL OBTAIN COPIES OF ANY AND ALL LOCAL AND STATE REGULATIONS THAT ARE APPLICABLE TO STORM WATER MANAGEMENT, EROSION CONTROL, AND POLLUTION MINIMIZATION AT THIS JOB SITE AND SHALL COMPLY FULLY WITH SUCH REGULATIONS. THE CONTRACTOR SHALL SUBMIT WRITTEN EVIDENCE OF SUCH COMPLIANCE IF REQUESTED BY THE OWNER OR ANY AGENT OF A REGULATORY BODY. THE CONTRACTOR SHALL COMPLY WITH ALL CONDITIONS OF ANY AND ALL LOCAL, STATE AND FEDERAL AGENCIES HAVE GOVERNING AUTHORITY, INCLUDING THE CONDITIONS RELATED TO MAINTAINING THE ESPC PLAN AND EVIDENCE OF COMPLIANCE WITH THE ESPC PLAN AT THE JOB SITE AND ALLOWING REGULATORY PERSONNEL ACCESS TO THE JOB SITE AND TO RECORDS IN ORDER TO DETERMINE COMPLIANCE.

RETENTION OF RECORDS

1. THE PRIMARY PERMITEE SHALL RETAIN THE FOLLOWING RECORDS AT THE CONSTRUCTION SITE OR THE RECORDS SHALL BE READILY AVAILABLE AT A DESIGNATED ALTERNATE LOCATION FROM COMMENCEMENT OF CONSTRUCTION UNTIL SUCH TIME AS A N.O.T. IS SUBMITTED IN ACCORDANCE WITH PART VI OF THE NPDES PERMIT, GAR 100001:

A. A COPY OF ALL NOTICES OF INTENT SUBMITTED TO EPD.

B. A COPY OF THE EROSION, SEDIMENTATION AND POLLUTION CONTROL PLAN REQUIRED BY THE NPDES, GAR 100001 PERMIT;

C. THE DESIGN PROFESSIONAL'S REPORT OF THE RESULTS OF THE INSPECTION CONDUCTED IN ACCORDANCE WITH PART IV.A.5. OF THE NPDES, GAR 100001 PERMIT;

D. A COPY OF ALL MONITORING INFORMATION, RESULTS, AND REPORTS REQUIRED BY THE NPDES, GAR 100001 PERMIT;

E. A COPY OF ALL INSPECTION REPORTS GENERATED IN ACCORDANCE WITH PART IV.D.4.a. OF THE NPDES, GAR 100001 PERMIT;

F. A COPY OF ALL VIOLATION SUMMARIES AND VIOLATION SUMMARY REPORTS GENERATED IN ACCORDANCE WITH PART III.D.2 OF THE NPDES, GAR 100001 PERMIT; AND

G. DAILY RAINFALL INFORMATION COLLECTED IN ACCORDANCE WITH PART IV.D.4.a.(1)(c) OF THE NPDES, GAR 100001 PERMIT.

2. COPIES OF ALL NOTICES OF INTENT, NOTICES OF TERMINATION, REPORTS, PLANS, MONITORING REPORTS, MONITORING INFORMATION, INCLUDING ALL CALIBRATION AND MAINTENANCE RECORDS AND ALL ORIGINAL STRIP CHART RECORDINGS FOR CONTINUOUS MONITORING INSTRUMENTATION, EROSION, SEDIMENTATION AND POLLUTION CONTROL PLANS, RECORDS OF ALL DATA USED TO COMPLETE THE NOTICE OF INTENT TO BE COVERED BY THE NPDES, GAR 100001 PERMIT AND ALL OTHER RECORDS REQUIRED BY THIS PERMIT SHALL BE RETAINED BY THE PERMITEE WHO EITHER PRODUCED OR USED IT FOR A PERIOD OF AT LEAST THREE YEARS FROM THE DATE THAT THE N.O.T. IS SUBMITTED IN ACCORDANCE WITH PART IV OF THE NPDES, GAR 100001 PERMIT. THESE RECORDS MUST BE MAINTAINED AT THE PERMITEE'S PRIMARY PLACE OF BUSINESS OR AT A DESIGNATED ALTERNATIVE LOCATION ONCE THE CONSTRUCTION ACTIVITY HAS CEASED AT THE PERMITTED SITE. THIS PERIOD MAY BE EXTENDED BY REQUEST OF THE EPD AT ANY TIME UPON WRITTEN NOTIFICATION TO THE PERMITTEE.

DESIGN PROFESSIONAL'S CERTIFICATION:

1. "I CERTIFY THAT THE PERMITTEE'S EROSION, SEDIMENTATION AND POLLUTION CONTROL PLAN PROVIDES FOR AN APPROPRIATE AND COMPREHENSIVE SYSTEM OF BEST MANAGEMENT PRACTICES REQUIRED BY THE GEORGIA WATER QUALITY CONTROL ACT AND THE DOCUMENT "MANUAL FOR EROSION AND SEDIMENT CONTROL IN GEORGIA" (MANUAL) PUBLISHED BY THE STATE SOIL AND WATER CONSERVATION COMMISSION AS OF JANUARY 1 OF THE YEAR IN WHICH LAND DISTURBING ACTIVITY WAS PERMITTED, PROVIDES FOR THE SAMPLING OF THE RECEIVING WATER(S) OR THE SAMPLING OF THE STORM WATER OUTFALLS AND THAT THE DESIGNED SYSTEM OF BEST MANAGEMENT PRACTICES AND SAMPLING METHOD IS EXPECTED TO MEET THE REQUIREMENTS CONTAINED IN THE GENERAL NPDES PERMIT NO. GAR 100001."

2. "I CERTIFY UNDER PENALTY OF LAW THAT THIS PLAN WAS PREPARED AFTER A SITE VISIT TO THE LOCATIONS DESCRIBED HEREIN BY MYSELF OR MY AUTHORIZED AGENT, UNDER MY SUPERVISION."

3. "I CERTIFY UNDER THE PENALTY OF LAW THAT THIS DOCUMENT AND ALL ATTACHMENTS WERE PREPARED UNDER MY DIRECTION OR SUPERVISION IN ACCORDANCE WITH A SYSTEM DESIGNED TO ASSURE THAT QUALIFIED PERSONAL PROPERLY GATHER AND EVALUATE THE INFORMATION SUBMITTED. BASED UPON MY INQUIRY OF THE PERSON OR PERSONS WHO MANAGE THE SYSTEM, OR THOSE PERSONS DIRECTLY RESPONSIBLE FOR GATHERING THE INFORMATION, THE INFORMATION SUBMITTED IS, TO THE BEST OF MY KNOWLEDGE AND BELIEF, TRUE, ACCURATE, AND COMPLETE. I AM AWARE THAT THERE ARE SIGNIFICANT PENALTIES FOR SUBMITTING FALSE INFORMATION, INCLUDING THE POSSIBILITY OF FINE AND IMPRISONMENT FOR KNOWING VIOLATIONS."

_____
GSWCC LEVEL II DESIGN PROFESSIONAL CERTIFICATION #

DESIGN PROFESSIONAL 7-DAY VISIT CERTIFICATION

DATE OF INSPECTION _____

I CERTIFY THE SITE WAS IN COMPLIANCE WITH THE ESPC PLAN ON THE DATE OF INSPECTION

_____
GSWCG LEVEL II DESIGN PROFESSIONAL CERTIFICATION #

INSPECTION REVEALED THE FOLLOWING DISCREPANCIES FROM THE ESPC PLAN.

_____

_____

_____

THE DEFICIENCIES MUST BE ADDRESSED IMMEDIATELY AND A RE-INSPECTION SCHEDULED. WORK SHALL NOT PROCEED ONSITE UNTIL DESIGN PROFESSION CERTIFICATION IS OBTAINED.

OWNER/OPERATOR'S CERTIFICATION:

1. "I CERTIFY THAT THE RECEIVING WATER(S) OR THE OUTFALL(S) OR A COMBINATION OF RECEIVING WATER(S) AND OUTFALL(S) WILL BE MONITORED IN ACCORDANCE WITH THE EROSION, SEDIMENTATION AND POLLUTION CONTROL PLAN."

2. "I CERTIFY THAT THE EROSION, SEDIMENTATION AND POLLUTION CONTROL PLAN HAS BEEN PREPARED IN ACCORDANCE WITH PART IV OF THE GENERAL NPDES PERMIT GAR 100001. THE PLAN WILL BE IMPLEMENTED AND THAT SUCH PLAN WILL PROVIDE FOR COMPLIANCE WITH THIS PERMIT."

3. "I CERTIFY UNDER THE PENALTY OF LAW THAT THIS DOCUMENT AND ALL ATTACHMENTS WERE PREPARED UNDER MY DIRECTION OR SUPERVISION IN ACCORDANCE WITH A SYSTEM DESIGNED TO ASSURE THAT QUALIFIED PERSONNEL PROPERLY GATHER AND EVALUATE THE INFORMATION SUBMITTED. BASED UPON MY INQUIRY OF THE PERSON OR PERSONS WHO MANAGE THE SYSTEM, OR THOSE PERSONS DIRECTLY RESPONSIBLE FOR GATHERING THE INFORMATION, THE INFORMATION SUBMITTED IS, TO THE BEST OF MY KNOWLEDGE AND BELIEF, TRUE, ACCURATE, AND COMPLETE. I AM AWARE THAT THERE ARE SIGNIFICANT PENALTIES FOR SUBMITTING FALSE INFORMATION, INCLUDING THE POSSIBILITY OF FINE AND IMPRISONMENT FOR KNOWING VIOLATIONS."

4. "I CERTIFY THAT THE PERMITTEE'S EROSION, SEDIMENTATION AND POLLUTION CONTROL PLAN PROVIDES FOR AN APPROPRIATE AND COMPREHENSIVE SYSTEM OF BEST MANAGEMENT PRACTICES REQUIRED BY THE GEORGIA WATER QUALITY CONTROL ACT AND THE DOCUMENT "MANUAL FOR EROSION AND SEDIMENT CONTROL IN GEORGIA" (MANUAL) PUBLISHED BY THE STATE SOIL AND WATER CONSERVATION COMMISSION AS OF JANUARY 1 OF THE YEAR IN WHICH LAND DISTURBING ACTIVITY WAS PERMITTED. THE PLAN PROVIDES FOR THE SAMPLING OF THE RECEIVING WATER(S) OR THE SAMPLING OF THE STORM WATER OUTFALLS. THE DESIGNED SYSTEM OF BEST MANAGEMENT PRACTICES AND SAMPLING METHOD IS EXPECTED TO MEET THE REQUIREMENTS CONTAINED IN THE GENERAL NPDES PERMIT NO. GAR 100001."

5. "I CERTIFY THAT THE APPLICABLE PORTIONS OF THE EROSION CONTROL PLANS WILL BE PROVIDED TO EACH SECONDARY PERMITTEE PRIOR TO THE SECONDARY PERMITTEE CONDUCTING ANY CONSTRUCTION ACTIVITY."

_____
OWNER/OPERATOR'S SIGNATURE

CONSTRUCTION SCHEDULE

ACTIVITY	MONTHS 1	2	3	4	5	6
INSTALL EROSION & SEDIMENT CONTROL BMP'S						
MAINTAIN EROSION & SEDIMENT CONTROL BMP'S						
BEGIN CLEARING & GRUBBING						
UTILITIES AND VAULT INSTALLATION						
INTERMEDIATE EROSION & SEDIMENT CONTROL						
PRELIMINARY GRADING						
CURB & ROADWAY CONSTRUCTION						
COLUMBARIUM CONSTRUCTION						
FINAL GRADING						
PERMANENT STABILIZATION						
LANDSCAPING						
REMOVAL OF EROSION BMP'S						

NOTE: THIS SCHEDULE IS APPROXIMATE, AND IS INTENDED FOR EROSION AND SEDIMENT CONTROL PURPOSES ONLY.

SAMPLE POINT LOCATION MAP

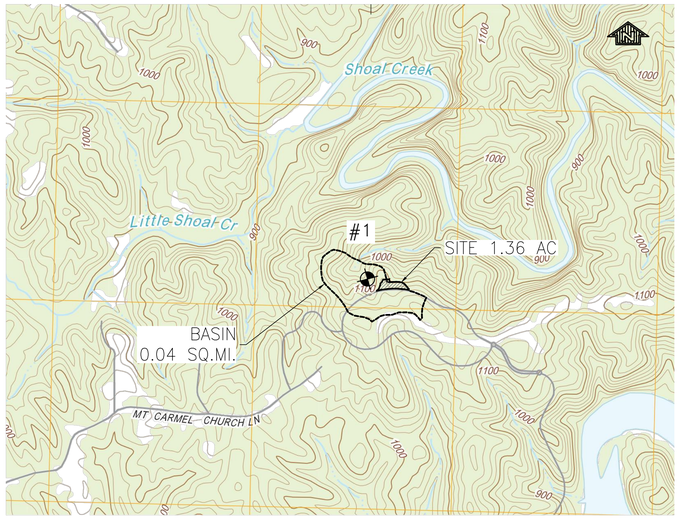

BID DOCUMENTS

Revisions | Date

PRIME:
AMEC FOSTER WHEELER
ENVIRONMENT & INFRASTRUCTURE
1075 BIG SHANTY ROAD NW,
SUITE 100
KENNESAW, GA. 30144
(770) 421-3400
AMEC PROJECT: 6166-15-0011

MEP ENGINEER:

GEORGIA REGISTERED PROFESSIONAL ENGINEER No. 15884 JAMES L. STUDER

IRRIGATION DESIGNER:
Irrigation Consultant Services
2231 Weatherstone Circle
Conyers, GA 30094
(770) 929-0884, fax (770) 760-8025

NATIONAL CEMETERY ADMINISTRATION

Drawing Title: EROSION & SEDIMENT CONTROL NOTES

Project Title: 4000 NICHE COLUMBARIUM GEORGIA NATIONAL CEMETERY

Date: 23 OCTOBER 2015

Project No. 922CM3005

Approved: Director, Technical Support Service

Approved: Chief, Architectual & Engineering Division

Building Number | Checked | Drawn

Location: 1080 VETERANS CEMETERY RD, CANTON, GA 30114

DRAWING NO. C-602

Sheet 25 Of 31

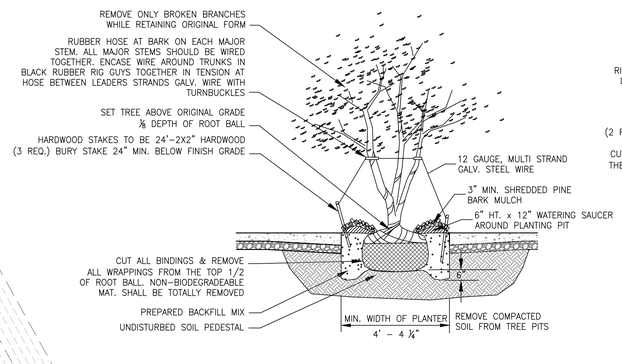

1 L-101 **MULTI-TRUNK TREE PLANTING DETAIL**

SCALE: N.T.S.

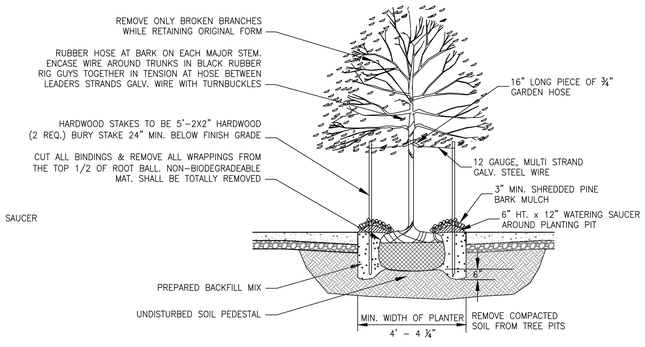

2 L-101 **SINGLE-TRUNK TREE PLANTING DETAIL**

SCALE: N.T.S.

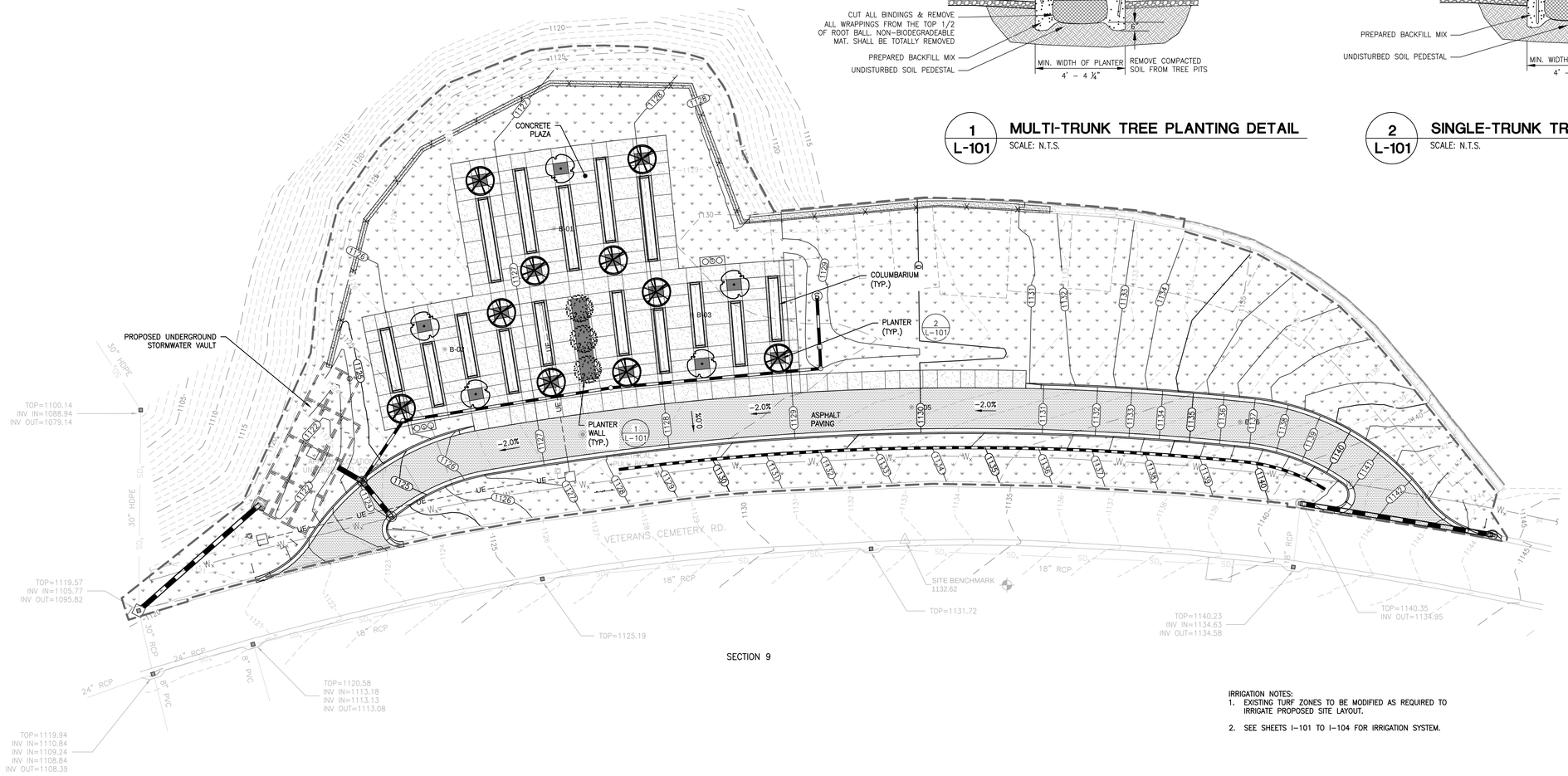

SECTION 9

IRRIGATION NOTES:
1. EXISTING TURF ZONES TO BE MODIFIED AS REQUIRED TO IRRIGATE PROPOSED SITE LAYOUT.
2. SEE SHEETS I-101 TO I-104 FOR IRRIGATION SYSTEM.

PLANT SCHEDULE				
QUANTITY	BOTANICAL NAME	COMMON NAME	SIZE	COMMENTS
3	ACER PALMATUM "GLOWING EMBERS"	GLOWING EMBERS MAPLE	2 ½" - 3" CAL.	8'HT. x 4'SP.
5	LAGERSTROEMIA "RED ROCKET"	"RED ROCKET" CRAPE MYRTLE	2 ½" - 3" CAL.	SINGLE TRUNK 10' HT. x 6' SP.
10	LAGERSTROEMIA "NATCHEZ"	"NATCHEZ" CRAPE MYRTLE	2 ½" - 3" CAL.	SINGLE TRUNK 10' HT. x 6' SP.
QUANTITIES ARE TO BE VERIFIED BY CONTRACTOR. 3960 SY	CYNODON DACTYLON	"CELEBRATION" BERMUDA		SOD

LEGEND

- PERMANENT GRASS
- GLOWING EMBERS MAPLE
- "RED ROCKET" CRAPE MYRTLE
- "NATCHEZ" CRAPE MYRTLE

NOTES:
1. ALL NURSERY STOCK SHALL MEET SPECIFICATIONS. ROOT BALLS SHALL MEET OR EXCEED SIZE STANDARDS SET FORTH IN "AMERICAN STANDARDS FOR NURSERY STOCK", LATEST EDITION. MAIN LEADERS OF ALL TREES SHALL REMAIN INTACT.
2. MULCH SHALL BE DRY, CLEAN, AND FREE FROM ANY NOXIOUS WEEDS OR DELETERIOUS MATERIAL. MULCH PLANT PITS AND PLANTING BEDS WITH SPECIFIED MULCH TO THE DEPTH INDICATED ON THE DRAWINGS AND DETAILS.
3. REMOVE FROM SITE ANY PLANT MATERIAL WHICH TURNS BROWN OR DEFOLIATES WITHIN FIVE DAYS AFTER PLANTING. REPLACE IMMEDIATELY WITH APPROVED SPECIFIED MATERIAL.
4. MAINTAIN ALL PLANT MATERIAL UNTIL SUBSTANTIAL COMPLETION, UNLESS OTHERWISE SPECIFIED. MAINTENANCE INCLUDES WATERING, SPRAYING, WEEDING, MULCHING, STRAIGHTENING, MOWING, FERTILIZING, CLEANUP, AND OTHER TASKS AS NEEDED.
5. CONTRACTOR TO REMOVE COMPACTED SOIL FROM TREE PLANTING AREA A MAXIMUM OF 4 FEET AND MINIMUM OF 3 FEET.
6. OUTER LIMITS OF SODDING ARE APPROXIMATE. WHEN SODDING IS NOTED ON THE PLANS, IT SHALL APPLY TO ALL AREAS DISTURBED BY CONSTRUCTION ACTIVITIES, EVEN IF THESE ACTIVITIES EXTEND BEYOND THE SODDING LIMITS APPROXIMATED.

N

0 10' 20' 40'

SCALE: 1"=20'

BID DOCUMENTS

Revisions	Date

PRIME:

amec foster wheeler

AMEC FOSTER WHEELER
ENVIRONMENT & INFRASTRUCTURE
1075 BIG SHANTY ROAD NW,
SUITE 100
KENNESAW, GA. 30144
(770) 421-3400
AMEC PROJECT: 6166-15-0011

MEP ENGINEER:

REGISTERED No. 769 LANDSCAPE ARCHITECT JAMES AUBREY PHILLIPS 10-23-15

IRRIGATION DESIGNER:

Irrigation Consultant Services
2231 Weatherstone Circle
Conyers, GA 30094
(770) 929-0884, fax (770) 760-8025

NATIONAL CEMETERY ADMINISTRATION

Drawing Title	Project Title	Date
LANDSCAPE PLAN	4000 NICHE COLUMBARIUM GEORGIA NATIONAL CEMETERY	23 OCTOBER 2015
		Project No. 922CM3005
Approved: Director, Technical Support Service	Building Number / Checked / Drawn	DRAWING NO. L-101
Approved: Chief, Architectual & Engineering Division	Location 1080 VETERANS CEMETERY RD, CANTON, GA 30114	Sheet 26 Of 31

IRRIGATION GENERAL NOTES:

1. CONTRACTOR IS RESPONSIBLE FOR ALL WORK SHOWN UNLESS SPECIFICALLY INDICATED OTHERWISE.

2. CONTRACTOR SHALL VISIT THE SITE PRIOR TO CONSTRUCTION TO DETERMINE THE EXTENT OF THE PROJECT.

3. CONTRACTOR SHALL CONTACT LOCAL UTILITY PROTECTION SERVICE (MISS DIG) PRIOR TO ANY WORK. CONTRACTOR IS RESPONSIBLE FOR FIELD LOCATING AND PROTECTING ALL UTILITIES. CONTACT THE ENGINEER IN THE EVENT THAT THE UTILITIES CONFLICT WITH THE PLAN DRAWINGS.

4. CONTRACTOR TO PLACE LATERAL MIN. 3 FEET INSIDE FENCE. LOCATE HEADS 6 INCHES FROM FENCE.

5. THE IRRIGATION CONTRACTOR SHALL PROVIDE ON-SITE AND HANDS-ON TRAINING FOR THE CEMETERY EMPLOYEES WITH RESPECT TO THE IRRIGATION SYSTEM.

6. THE IRRIGATION CONTRACTOR SHALL PREPARE AND PROVIDE A GPS MAPPED AS-BUILT DRAWING FOR THE INSTALLED SYSTEM IN AUTOCAD 2010 FORMAT, REFER TO SPECIFICATIONS FOR MORE INFORMATION.

7. THE IRRIGATION CONTRACTOR SHALL CONDUCT A PRE-IRRIGATION MEETING PRIOR TO ANY INSTALLATION.

8. THE IRRIGATION CONTRACTOR SHALL PREPARE AND PROVIDE A COLORED 30"X42" LAMINATED ZONE MAP. THE ZONE MAP MUST BE APPROVED BY THE VA PRIOR TO COMPLETION AND INSTALLATION.

9. THE IRRIGATION CONTRACTOR SHALL PROVIDE 10 SPARE 8005-SS SERIES IRRIGATION HEADS, 10 SPARE 5006-SS-SAM-PRS SERIES IRRIGATION HEADS, 10 SPARE 1806-SAM-PRS SPRAY HEADS AND 10 SPARE 1812-SAM-PRES SRPAY HEADS.

10. THE IRRIGATION CONTRACTOR SHALL MAINTAIN A WORKING DRAWING OF THE IRRIGATION SYSTEM ON SITE AT ALL TIMES DURING CONSTRUCTION.

11. THE IRRIGATION CONTRACTOR SHALL COORDINATE THE INSTALLATION OF THE IRRIGATION SYSTEM WITH THE LANDSCAPE CONTRACTOR TO INSURE PROPER INSTALLATION OF BOTH THE IRRIGATION SYSTEM AND THE LANDSCAPE MATERIAL

12. THE IRRIGATION SYSTEM PLAN IS ILLUSTRATED IN SCHEMATIC FORM. THE IRRIGATION CONTRACTOR MAY BE REQUIRED TO MAKE MINOR ADJUSTMENTS IN THE FIELD. THESE MINOR ADJUSTMENTS SHALL BE MADE AT NO ADDITIONAL COST TO THE OWNER BUT SHALL BE MADE ONLY AFTER NOTIFICATION IS MADE TO THE OWNER OR HIS REPRESENTATIVE.

13. THE CONTRACTOR SHALL FAMILIARIZE HIMSELF WITH THE SITE SO THAT HE IS AWARE OF ANY SPECIAL CONDITIONS WHICH EXIST THAT MAY AFFECT HIS BID PROPOSAL AND SHALL THEREAFTER BE RESPONSIBLE FOR ALL COST INCURRED BY HIMSELF IN RELATION TO THE INSTALLATION.

14. ALL SPRINKLERS WILL BE MOUNTED ON UNITIZED SWING JOINTS.

15. ALL PIPING AND WIRING UNDER HARDTOPS WILL BE IN SCH 40 PVC PIPE SLEEVE.

16. IRRIGATION CONTRACTOR MUST STAKE ALL PROPOSED TRENCHLINES IN GRAVESITE AREAS FOR REVIEW AND APPROVAL BY OWNER'S REPRESENTATIVE BEFORE ANY TRENCHING ACTIVITIES OCCUR.

17. IRRIGATION CONTRACTOR WILL BE RESPONSIBLE TO SETUP MANUFACTURER'S TRAINING FOR OPERATION AND MAINTENANCE OF THE COMPLETE IRRIGATION SYSTEM, INCLUDING CENTRAL CONTROL, TO AT LEAST FOUR NCA EMPLOYEES. TRAINING SHALL BE FOR 16 HOURS AND WILL BE DONE IN INCREMENTS NO LONGER THAN 4 HOURS IN DURATION.

18. CONTRACTOR TO UTILIZE A CHECK VALVE DEVICE FOR ALL SPRINKLER HEADS.

19. ALL GROUNDING AND SURGE PROTECTION TO BE INSTALLED AS PER MANUFACTURER'S SPECIFICATIONS/RECOMMENDATIONS AND IN ACCORDANCE WITH ASIC GUIDELINES.

20. FOR ALL THREADED CONNECTIONS, UTILIZE WELD-ON ALL PURPOSE THREAD SEALANT PASTE FOR PVC PIPE (NON-TEFLON).

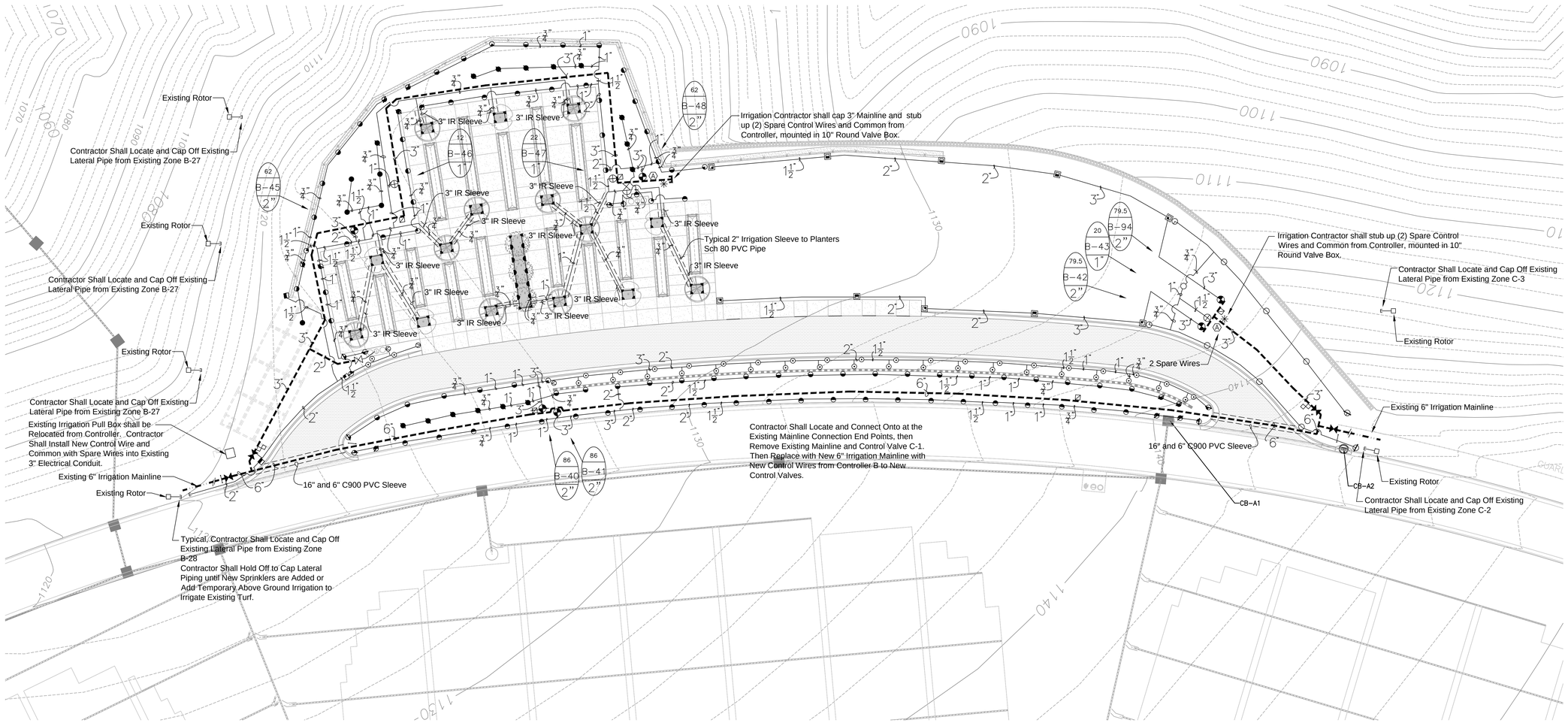

IRRIGATION LEGEND

SYSTEM NOTES:
*NEW IRRIGATION SYSTEM WILL BE CONNECTED TO EXISTING IRRIGATION SYTSEM. REFER TO PLANS FOR MORE SPECIFICS ON POINTS OF CONNECTION, POINTS TO CONENCTION ONTO AND TO CAP OFF EXISTING IRRIGATION, ETC.
*IRRIGATION INSTALLATION CONTRACTOR SHALL BE RESPONSIBLE TO ENSURE THAT NEW IRRIGATION IS FULLY PROGRAMMED INTO EXISTING CONTROLLER/CENTRAL CONTROL SYSTEM.

2" MANUAL DRAIN VALVE. BRASS BALL VALVE. DETAIL-J.

RAIN BIRD 150-EFB-CP-PRS OR 200-EFB-CP-PRS BRASS ELECTRIC REMOTE CONTROL VALVE, 11/2" OR 2" SIZE, MOUNTED WITH LEEMCO LV-212 LATERAL ISOLATION TEE AND WITH PRESSURE REGULATION DEVICES. DETAIL-B.

RAIN BIRD 100-EFB-CP-PRS BRASS ELECTRIC REMOTE CONTROL VALVE, 1" SIZE, MOUNTED WITH LEEMCO LV-212 LATERAL ISOLATION TEE ANDWITH PRESSURE REGULATION DEVICES. DETAIL-B.

2" AIR/VACUUM RELIEF VALVE. INSTALLED AT HIGH POINTS OF IRRIGATION MAINLINE LOOP AS NOTED ON IRRIGATION PLANS. DETAIL-L.

RAIN BIRD 1806-SAM-PRS, 6" POP-UP LAWN SPRAY SPRINKLER, 15' RADIUS, FULL-4.0 GPM, HALF-2.0 GPM, QUARTER-1.0 GPM, 30 PSI. DETAIL-M.

RAIN BIRD 1806-SAM-PRS, 6" POP-UP LAWN SPRAY SPRINKLER, 12' RADIUS, FULL-3.0 GPM, HALF-1.5 GPM, QUARTER-0.75 GPM, 30 PSI. DETAIL-M.

RAIN BIRD 1806-SAM-PRS, 6" LAWN SIDE STRIP SPRAY SPRINKLER, 4' X 30' RADIUS, 1.5 GPM, 30 PSI. DETAIL-M.

RAIN BIRD 1806-SAM-PRS, 6" LAWN END STRIP SPRAY SPRINKLER, 4' X 15' RADIUS, 1.0 GPM, 30 PSI. DETAIL-M.

RAIN BIRD 1812-SAM-PRS, 12" HI-POP SHRUB SPRAY SPRINKLER, 5' RADIUS, HALF-0.2 GPM, QUARTER-0.1 GPM, 30 PSI. DETAIL-J.

RAIN BIRD 8005-SS-12, WITH #12 NOZZLE, LARGE TURF CLOSED CASE ROTOR, FULL CIRCLE ARC, 59' RADIUS @ 12.0 GPM, 60 PSI, RUBBER COVER, STAINLESS STEEL RISER, UTILIZE 1" UNITIZED TRIPLE SWING JOINTS, DETAIL-K.

RAIN BIRD 8005-SS-12, WITH #12 NOZZLE, LARGE TURF CLOSED CASE ROTOR, PART CIRCLE ARC, 59' RADIUS @ 20.0 GPM, 60 PSI, RUBBER COVER, STAINLESS STEEL RISER, UTILIZE 1" UNITIZED TRIPLE TOP SWING JOINTS, DETAIL-K.

RAIN BIRD 8005-SS-16, WITH #16 NOZZLE, LARGE TURF CLOSED CASE ROTOR, FULL CIRCLE ARC, 65' RADIUS @ 15.9 GPM, 60 PSI, RUBBER COVER, STAINLESS STEEL RISER, UTILIZE 1" UNITIZED TRIPLE TOP SWING JOINTS, DETAIL-K.

RAIN BIRD 8005-SS-16, WITH #16 NOZZLE, LARGE TURF CLOSED CASE ROTOR, PART CIRCLE ARC, 65' RADIUS @ 15.9 GPM, 60 PSI, RUBBER COVER, STAINLESS STEEL RISER, UTILIZE 1" UNITIZED TRIPLE TOP SWING JOINTS, DETAIL-K.

RAIN BIRD #5 QUICK COUPLING VALVE 1" SIZE. CONTRACTOR TO SUPPLY TWO QCV KEYS AND MATCHING HOSE SWIVELS. DETAIL-C.

MAINLINE ISOLATION GATE VALVE, DOMESTIC DUCTILE IRON GASKETED, DETAIL-A.

MAINLINE PIPE:
1-1/2" AND SMALLER MAINLINE SHALL BE SCH 40 PVC (SOLVENT WELD) UTILIZING SCH 40 PVC SOLVENT WELD FITTINGS. 3" AND LARGER MAINLINE SHALL BE GASKETED CLASS 200 PVC UTILIZING DUCTILE IRON LEEMCO FITTINGS AND LEEMCO RESTRAINTS.

IRRIGATION SLEEVE: C900 PVC (UNLESS NOTED OTHERWISE), SIZE NOTED ON PLAN. DETAIL-G.

LATERAL LINE PIPE: SCH 40 PVC (SOLVENT WELD), SIZE NOTED.

TYPICAL VALVE INDICATOR

28.5 — GALLONS PER MIN.
10 — STATION NUMBER
1 1/2" — VALVE SIZE

NOTES:
1. ALL SPRINKLERS WILL BE MOUNTED ON UNITIZED SWING JOINTS (TRIPLE TOP).
2. CONTRACTOR TO UTILIZE A AUTOMATIC DRAIN CHECK VALVE DEVICE FOR ALL SPRINKLERS.
3. ALL PIPING AND WIRING UNDER HARDTOPS WILL BE IN CLASS SCH 40 PVC PIPE SLEEVE.
4. IRRIGATION CONTRACTOR MUST STAKE ALL PROPOSED TRENCHLINES IN GRAVESITE AREAS FOR REVIEW AND APPROVAL BY OWNER'S REPRESENTATIVE BEFORE ANY TRENCHING ACTIVITIES OCCUR.
5. IRRIGATION CONTRACTOR WILL BE RESPONSIBLE TO SETUP MANUFACTURER'S TRAINING (I.E. RAIN BIRD) FOR OPERATION AND MAINTENANCE OF THE COMPLETE IRRIGATION SYSTEM, INCLUDING CENTRAL CONTROL, TO AT LEAST FOUR NCA EMPLOYEES.
6. IRRIGATION CONTRACTOR WILL BE RESPONSIBLE TO REPLACE AND/OR REPAIR ANY EXISTING IRRIGATION EQUIPMENT DAMAGED DURING NEW CONSTRUCTION.

N

0 10' 20' 40'
SCALE: 1"=20'

BID DOCUMENTS

Revisions	Date

PRIME:
AMEC FOSTER WHEELER
ENVIRONMENT & INFRASTRUCTURE
1075 BIG SHANTY ROAD NW, SUITE 100
KENNESAW, GA. 30144
(770) 421-3400
AMEC PROJECT: 6166-15-0011

MEP ENGINEER:

REGISTERED LANDSCAPE ARCHITECT No. 700 — JAMES AUSTIN PHILLIPS — 10-20-15

IRRIGATION DESIGNER:
Irrigation Consultant Services
2231 Weatherstone Circle
Conyers, GA 30094
(770) 929-0884, fax (770) 760-8025

NATIONAL CEMETERY ADMINISTRATION

Drawing Title: IRRIGATION PLAN

Project Title: 4000 NICHE COLUMBARIUM GEORGIA NATIONAL CEMETERY

Date: 23 OCTOBER 2015

Project No. 922CM3005

Approved: Director, Technical Support Service

Approved: Chief, Architectual & Engineering Division

Building Number | Checked | Drawn

Location: 1080 VETERANS CEMETERY RD, CANTON, GA 30114

DRAWING NO. I-101

Sheet 27 Of 31

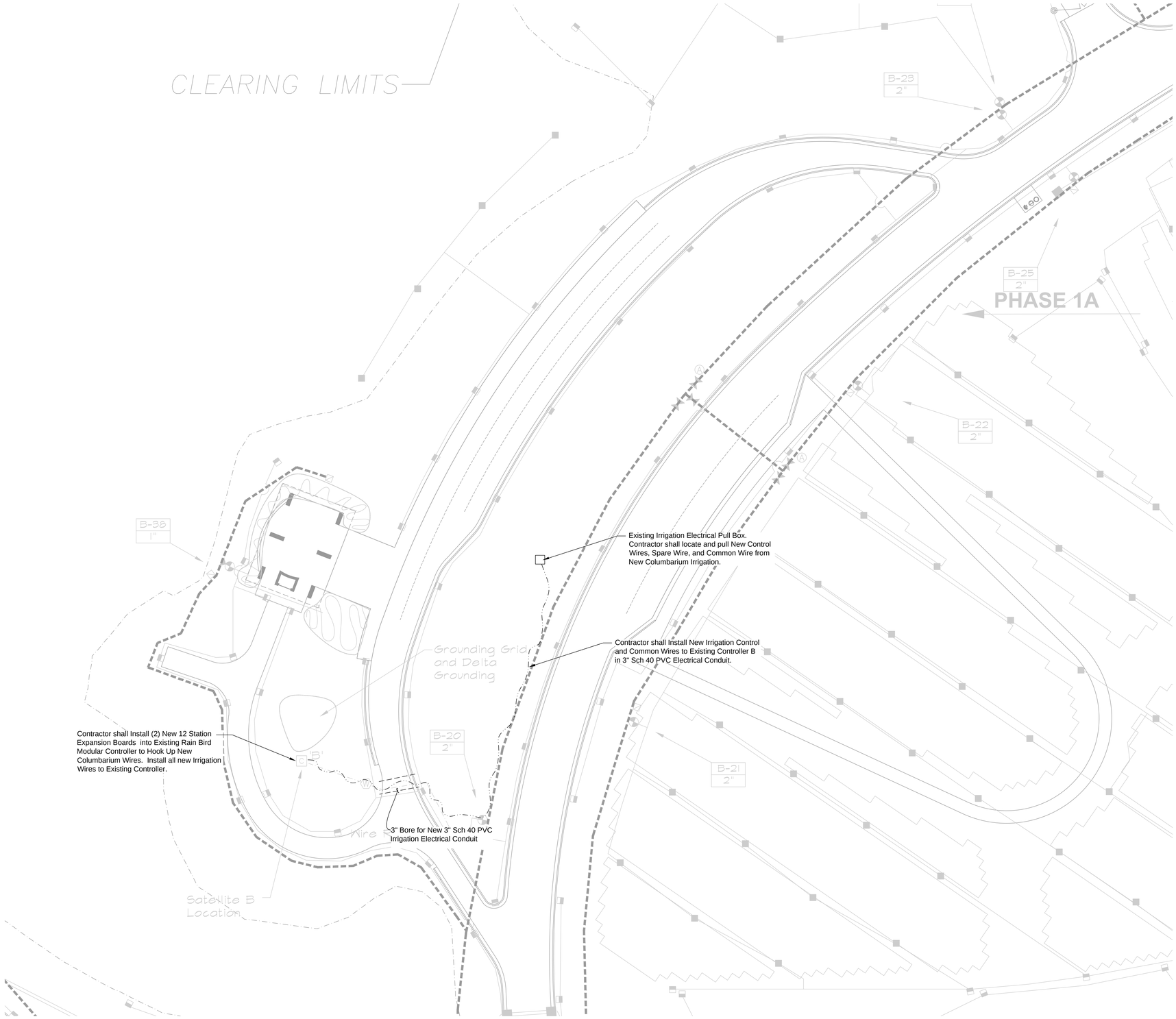

BID DOCUMENTS

Revisions	Date

PRIME:

amec foster wheeler

AMEC FOSTER WHEELER
ENVIRONMENT & INFRASTRUCTURE
1075 BIG SHANTY ROAD NW,
SUITE 100
KENNESAW, GA, 30144
(770) 421-3400
AMEC PROJECT: 6166-15-0011

MEP ENGINEER:

GEORGIA REGISTERED No. 760 LANDSCAPE ARCHITECT STEP AUBREY PHILLIPS
10-23-15

IRRIGATION DESIGNER:

Irrigation Consultant Services
2231 Weatherstone Circle
Conyers, GA 30094
(770) 929-0884, fax (770) 760-8025

NATIONAL CEMETERY ADMINISTRATION

Drawing Title
EXISTING IRRIGATION CONTROLLER CONNECTION PLAN

Approved: Director, Technical Support Service

Approved: Chief, Architectual & Engineering Division

Project Title
4000 NICHE COLUMBARIUM
GEORGIA NATIONAL CEMETERY

Building Number | Checked | Drawn

Location
1080 VETERANS CEMETERY RD,
CANTON, GA 30114

Date
23 OCTOBER 2015

Project No.
922CM3005

DRAWING NO.
I-102

Sheet 28 Of 31

NOTES:
1. RESTRAINTS TO BE UTILIZED ON ALL ALL MAINLINE AS PER MANUFACTURER'S RECOMMENDATIONS FOR PIPE TYPE, PIPE SIZE, AND LOCAL ENVIRONMENTAL CONDITIONS. THRUST BLOCKING WILL NOT BE UTILIZED.
2. UTILIZE RAIN BIRD COMMERCIAL GRADE VALVE BOXES.
3. ALL SWING JOINTS FOR SPINKLER HEADS AND QUICK COUPLER VALVES TO UTILIZED TRIPLE TOP SWING JOINTS.

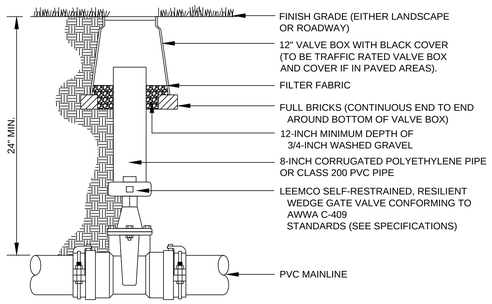

NOTES:
1. NOMINAL SIZE OF GATE VALVE TO MACH NOMINAL MAINLINE SIZE.
2. INSTALL A 4-INCH THICK CONCRETE PAD BELOW VALVE WITH NO. 4 REBAR WHEN USING PUSH ON TYPE VALVES.
3. RESILIENT WEDGE GATE VALVE TO UTILIZE MECHANICAL JOINT. THE OPERATOR IS A WRENCH NUT.
4. ANCHOR ISOLATION VALVE TO CONCRETE BY BENDING REBAR OVER EACH END OF VALVE AND EXTENDING A MINIMUM OF 6-INCHES INTO CONCRETE SUPPORT BLOCK.
5. WRAP VALVE ENDS AND BODY IN 3 MIL. PLASTIC PRIOR TO POURING CONCRETE
6. CONCRETE SUPPORT BLOCK IS TO BE POURED UNDER ISOLATION GATE VALVE. ONLY THE BOTTOM OF THE ISOLATION GATE VALVE TO BE IN CONTACT WITH CONCRETE.
7. INSTALL FILTER FABRIC AROUND EXTERIOR OF VALVE BOX. USE DUCT TAPE TO SECURE FABRIC TO PIPE AND VALVE BOX.
8. LABEL VALVE BOX COVER PER SPECIFICATIONS.
9. ISOLATION VALVES TO BE INSTALLED WITH EXPANSION RESTRAINTS.

A ISOLATION GATE VALVE

NTS

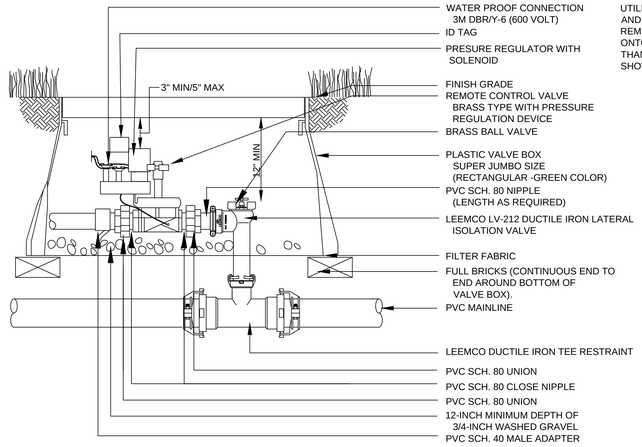

NOTES:
1. USE VALVE BOX EXTENSIONS NECESSARY TO ACHIEVE MINIMUM DIMENSIONS ABOVE ASSEMBLY.
2. NORMAL SIZE OF ALL COMPONENTS ARE TO BE THE SAME NOMINAL SIZE AS THE SOLENOID VALVE (SIZED AS SHOWN).
3. TRANSITION TO PROPER LATERAL PIPE BURIAL DEPTH USING PVC SCH. 40 SOLVENT WELD FITTINGS DOWNSTREAM OF REMOTE CONTROL VALVE ASSEMBLY.
4. INSTALL PRESSURE REGULATOR ON ALL REMOTE CONTROL VALVES. SET PRESSURE MODULE TO INDICATED PRESSURE ON LEGEND PER MANUFACTURER'S RECOMMENDATIONS.
5. INSTALL FILTER FABRIC AROUND EXTERIOR OF VALVE BOX. USE DUCT TAPE TO SECURE FABRIC TO PIPE AND VALVE BOX.
6. UTILIZE VALVE ID TAGS AS PER SPECIFICATIONS.
7. DO NOT ALLOW VALVE BOX SIDES TO REST ON PIPE.
8. POSITION VALVE BOX OVER VALVE TO ALLOW OPERATION OF SOLENOID AND BALL VALVES.

B REMOTE CONTROL VALVE

NTS

NOTE:
UTILIZE LEEMCO DUCTILE IRON SADDLE AND LEEMCO LV212 ANGLE VALVE FOR REMOTE CONTROL VALVE CONNECTION ONTO MAINLINE AND ISOLATION, RATHER THAN PVC CONNECTION/BALL VALVE SHOWN.

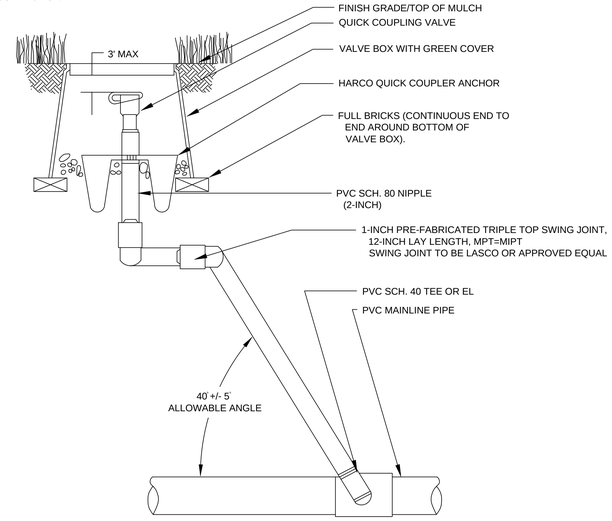

NOTES:
1. FURNISH FITTINGS AND PIPING NOMINALLY SIZED IDENTICAL TO NOMINAL QUICK COUPLING VALVE INLET SIZE.

C QUICK COUPLING VALVE

NTS

IRRIGATION LEGEND

SYSTEM NOTES:
*NEW IRRIGATION SYSTEM WILL BE CONNECTED TO EXISTING IRRIGATION SYTSEM. REFER TO PLANS FOR MORE SPECIFICS ON POINTS OF CONNECTION, POINTS TO CONENCTION ONTO AND TO CAP OFF EXISTING IRRIGATION, ETC.
*IRRIGATION INSTALLATION CONTRACTOR SHALL BE RESPONSIBLE TO ENSURE THAT NEW IRRIGATION IS FULLY PROGRAMMED INTO EXISTING CONTROLLER/CENTRAL CONTROL SYSTEM.

- 2" MANUAL DRAIN VALVE. BRASS BALL VALVE. DETAIL-J.
- RAIN BIRD 150-EFB-CP-PRS OR 200-EFB-CP-PRS BRASS ELECTRIC REMOTE CONTROL VALVE, 11/2" OR 2" SIZE, MOUNTED WITH LEEMCO LV-212 LATERAL ISOLATION TEE AND WITH PRESSURE REGULATION DEVICES. DETAIL-B.
- RAIN BIRD 100-EFB-CP-PRS BRASS ELECTRIC REMOTE CONTROL VALVE, 1" SIZE, MOUNTED WITH LEEMCO LV-212 LATERAL ISOLATION TEE ANDWITH PRESSURE REGULATION DEVICES. DETAIL-B.
- 2" AIR/VACUUM RELIEF VALVE. INSTALLED AT HIGH POINTS OF IRRIGATION MAINLINE LOOP AS NOTED ON IRRIGATION PLANS. DETAIL-L.
- RAIN BIRD 1806-SAM-PRS, 6" POP-UP LAWN SPRAY SPRINKLER, 15' RADIUS, FULL-4.0 GPM, HALF-2.0 GPM, QUARTER-1.0 GPM, 30 PSI. DETAIL-M.
- RAIN BIRD 1806-SAM-PRS, 6" POP-UP LAWN SPRAY SPRINKLER, 12' RADIUS, FULL-3.0 GPM, HALF-1.5 GPM, QUARTER-0.75 GPM, 30 PSI. DETAIL-M.
- RAIN BIRD 1806-SAM-PRS, 6" LAWN SIDE STRIP SPRAY SPRINKLER, 4' X 30' RADIUS, 1.5 GPM, 30 PSI. DETAIL-M.
- RAIN BIRD 1806-SAM-PRS, 6" LAWN END STRIP SPRAY SPRINKLER, 4' X 15' RADIUS, 1.0 GPM, 30 PSI. DETAIL-M.
- RAIN BIRD 1812-SAM-PRS, 12" HI-POP SHRUB SPRAY SPRINKLER, 5' RADIUS, HALF-0.2 GPM, QUARTER-0.1 GPM, 30 PSI. DETAIL-J.
- RAIN BIRD 8005-SS-12, WITH #12 NOZZLE, LARGE TURF CLOSED CASE ROTOR, FULL CIRCLE ARC, 59' RADIUS @ 12.0 GPM, 60 PSI, RUBBER COVER, STAINLESS STEEL RISER, UTILIZE 1" UNITIZED TRIPLE SWING JOINTS, DETAIL-K.
- RAIN BIRD 8005-SS-12, WITH #12 NOZZLE, LARGE TURF CLOSED CASE ROTOR, PART CIRCLE ARC, 59' RADIUS @ 20.0 GPM, 60 PSI, RUBBER COVER, STAINLESS STEEL RISER, UTILIZE 1" UNITIZED TRIPLE TOP SWING JOINTS, DETAIL-K.
- RAIN BIRD 8005-SS-16, WITH #16 NOZZLE, LARGE TURF CLOSED CASE ROTOR, FULL CIRCLE ARC, 65' RADIUS @ 15.9 GPM, 60 PSI, RUBBER COVER, STAINLESS STEEL RISER, UTILIZE 1" UNITIZED TRIPLE TOP SWING JOINTS, DETAIL-K.
- RAIN BIRD 8005-SS-16, WITH #16 NOZZLE, LARGE TURF CLOSED CASE ROTOR, PART CIRCLE ARC, 65' RADIUS @ 15.9 GPM, 60 PSI, RUBBER COVER, STAINLESS STEEL RISER, UTILIZE 1" UNITIZED TRIPLE TOP SWING JOINTS, DETAIL-K.
- RAIN BIRD #5 QUICK COUPLING VALVE 1" SIZE. CONTRACTOR TO SUPPLY TWO QCV KEYS AND MATCHING HOSE SWIVELS. DETAIL-C.
- MAINLINE ISOLATION GATE VALVE, DOMESTIC DUCTILE IRON GASKETED, DETAIL-A.
- MAINLINE PIPE: 1-1/2" AND SMALLER MAINLINE SHALL BE SCH 40 PVC (SOLVENT WELD) UTILIZING SCH 40 PVC SOLVENT WELD FITTINGS. 3" AND LARGER MAINLINE SHALL BE GASKETED CLASS 200 PVC UTILIZING DUCTILE IRON LEEMCO FITTINGS AND LEEMCO RESTRAINTS.
- IRRIGATION SLEEVE: C900 PVC (UNLESS NOTED OTHERWISE), SIZE NOTED ON PLAN. DETAIL-G.
- LATERAL LINE PIPE: SCH 40 PVC (SOLVENT WELD), SIZE NOTED.

TYPICAL VALVE INDICATOR

28.5 — GALLONS PER MIN.
10 — STATION NUMBER
1 1/2" — VALVE SIZE

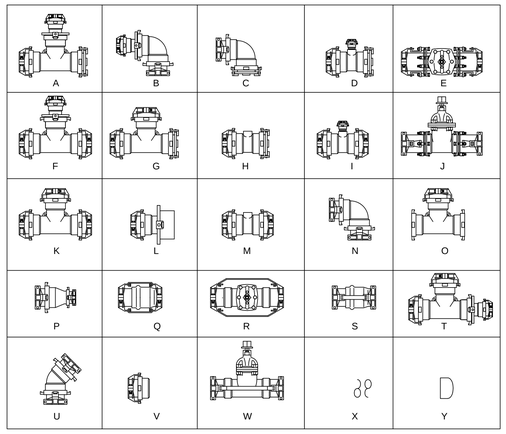

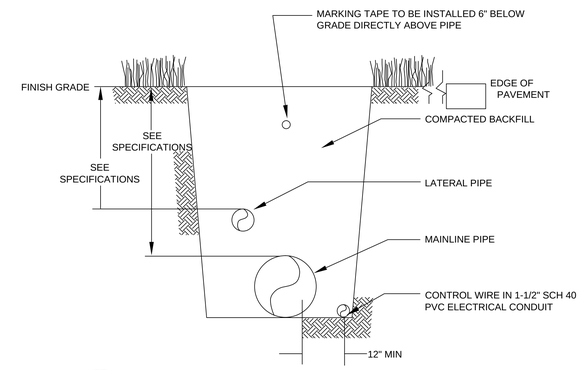

E TRENCHING

NTS

NOTES:
1. ALL SPRINKLERS WILL BE MOUNTED ON UNITIZED SWING JOINTS (TRIPLE TOP).
2. CONTRACTOR TO UTILIZE A AUTOMATIC DRAIN CHECK VALVE DEVICE FOR ALL SPRINKLERS.
3. ALL PIPING AND WIRING UNDER HARDTOPS WILL BE IN CLASS SCH 40 PVC PIPE SLEEVE.
4. IRRIGATION CONTRACTOR MUST STAKE ALL PROPOSED TRENCHLINES IN GRAVESITE AREAS FOR REVIEW AND APPROVAL BY OWNER'S REPRESENTATIVE BEFORE ANY TRENCHING ACTIVITIES OCCUR.
5. IRRIGATION CONTRACTOR WILL BE RESPONSIBLE TO SETUP MANUFACTURER'S TRAINING (I.E. RAIN BIRD) FOR OPERATION AND MAINTENANCE OF THE COMPLETE IRRIGATION SYSTEM, INCLUDING CENTRAL CONTROL, TO AT LEAST FOUR NCA EMPLOYEES.
6. IRRIGATION CONTRACTOR WILL BE RESPONSIBLE TO REPLACE AND/OR REPAIR ANY EXISTING IRRIGATION EQUIPMENT DAMAGED DURING NEW CONSTRUCTION.

DISTANCE CHART

REFER TO THE FOLLOWING TABLE THAT LISTS THE LENGTH (IN FEET) FOR EACH SIZE/TYPE FITTING WITHIN WHICH ALL JOINTS JUST BE RESTRAINED. ALL FITTINGS AND JOINT RESTRAINTS SHALL BE INSTALLED PER MANUFACTURERS RECOMMENDATIONS & SPECIFICATIONS.

AS AN EXAMPLE, IF YOU ARE INSTALLING A 3" MAINLINE WITH A DIRECTIONAL CHANGE OF 90°, REFER TO CHART UNDER PIPE SIZE TO 3" AND UNDER BENDS 90 YOU WILL SEE THE DISTANCE OF 11'. IF THERE IS ANY JOINT (VALVE, BELL, ETC.) YOU MUST INSTALL A JOINT RESTRAINT WITHIN 11' OF THE 90° MAINLINE DIRECTIONAL CHANGE.

PIPE	BENDS				REDUCERS			DEAD END	
SIZE	11°	22°	45°	90°	1 STEP	2 STEP	3 STEP	BLIND	SERV. B.
2"	1'	1'	2'	6'	-	-	-	19'	6'
2.5"	1'	2'	4'	9'	4'	-	-	23'	10'
3"	2'	3'	6'	11'	8'	10'	-	30'	15'
4"	2'	4'	9'	20'	14'	20'	31'	45'	25'
6"	3'	6'	13'	29'	30'	40'	53'	63'	40'
8"	4'	8'	15	38'	33'	55'	63'	75'	70'
10"	5'	9'	19'	45'	36'	56'	75'	96'	90'
12"	5'	10'	21'	53'	38'	60'	83'	112'	110'

CONTACT LOCAL LEEMCO REPRESENTATIVE FOR ALL QUESTIONS CONCERNING LEEMCO PRODUCTS. COORDINATE AN INSTALLATION CLINIC WITH LEEMCO PRIOR TO INSTALLING THE MAINLINE.

INSTALLATION CHART

REFER TO THE FOLLOWING TABLE WHICH LISTS THE NUMBER OF BOLTS, SIZE, AND TORQUE FOR EACH BOLT IN REFERENCE TO THE SIZE OF PIPE WHICH IS BEING RESTRAINED.

AS AN EXAMPLE, IF YOU HAVE A 3" PIPE, YOU WILL NEED 2 BOLTS THAT ARE 3/8 X 2.5" AND TIGHTEN THEM WITH A TORQUE WRENCH TO 20 FT-LBS.

PIPE SIZE	NO. BOLTS	BOLT SIZE	TORQUE FT-LBS.
2"	2	3/8" x 2.5"	20
2.5"	2	3/8" x 2.5"	20
3"	2	3/8" x 2.5"	20
4"	2	1/2" x 3"	50
6"	2	1/2" x 3.5"	50
8"	4	1/2" x 4"	50
10"	4	5/8" x 5.5"	100
12"	4	5/8" x 5.5"	100

D JOINT RESTRAINTS

NTS

NOTES:
1. INSTALLER OF SLEEVES SHALL BE RESPONSIBLE TO LOCATE SLEEVES IF NOT PROPERLY INSTALLED.
2. ALL IRRIGATION SLEEVES NOT BEING USED DURING EACH PHASE OF CONSTRUCTION SHALL HAVE MARKER PIPES AT EACH END OF SLEEVE LOWERED BELOW GROUND LEVEL WITH 10" ROUND VALVE BOX INSTALLED ABOVE EACH MARKER PIPE.

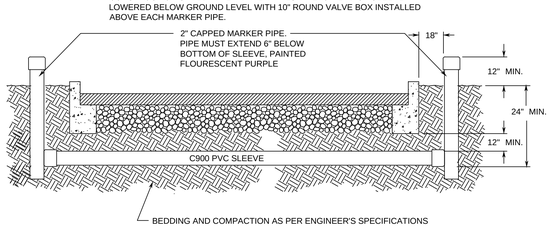

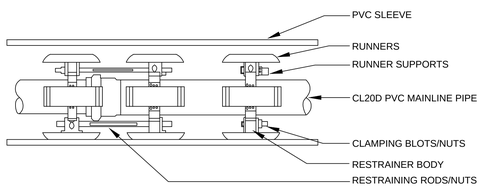

NOTES:
1. PROVIDE RESTRAINED CASING SPACERS AT ALL PIPE BELL JOINTS AND NO MORE THAN 10' APART PER CASING SPACER MANUFACTURER'S RECOMMENDATIONAL.
2. BLOW SAND IN ENDS OF SLEEVE TO SEAL SLEEVE ENDS.

FOR MAINLINE 4" AND LARGER

NOMINAL PIPE SIZE (INCHES)	MINIMUM CASING SLEEVE SIZE (INCHES)
3	12.0
4	14.0
6	16.0
8	20.0
10	24.0

F SLEEVING

BID DOCUMENTS

Revisions | Date

PRIME:
AMEC FOSTER WHEELER
ENVIRONMENT & INFRASTRUCTURE
1075 BIG SHANTY ROAD NW, SUITE 100
KENNESAW, GA. 30144
(770) 421-3400
AMEC PROJECT: 6166-15-0011

MEP ENGINEER:

IRRIGATION DESIGNER:
Irrigation Consultant Services
2231 Weatherstone Circle
Conyers, GA 30094
(770) 929-0884, fax (770) 760-8025

NATIONAL CEMETERY ADMINISTRATION

Drawing Title: IRRIGATION DETAILS	Project Title: 4000 NICHE COLUMBARIUM GEORGIA NATIONAL CEMETERY		Date: 23 OCTOBER 2015
			Project No. 922CM3005
Approved: Director, Technical Support Service	Building Number	Checked / Drawn	DRAWING NO. I-103
Approved: Chief, Architectual & Engineering Division	Location: 1080 VETERANS CEMETERY RD, CANTON, GA 30114		Sheet 29 Of 31

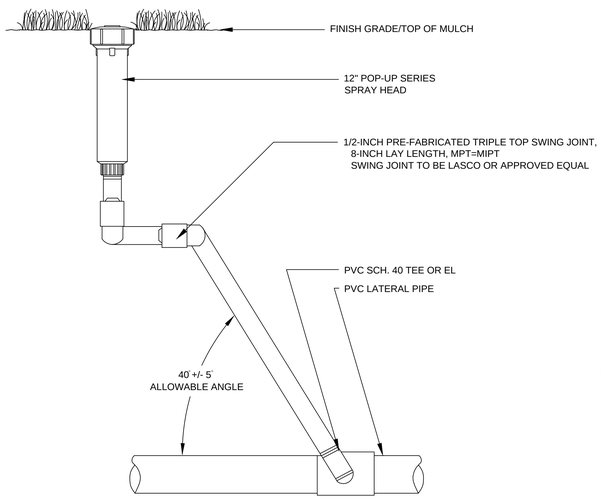

NOTES:
1. INSTALL SWING JOINT LAY ARM BETWEEN 30° AND 45° OF LATERAL PIPE IN ORDER TO ABSORB DOWNWARD IMPACT. IF SWING JOINT CAN NOT BE INSTALLED AT SPECIFIED ANGLE. CONSULT RESIDENT ENGINEER PRIOR TO INSTALLATION OF SWING JOINT.

G SHRUB SPRAY HEAD

NTS

NOTES:
1. RESTRAINTS TO BE UTILIZED ON ALL ALL MAINLINE AS PER MANUFACTURER'S RECOMMENDATIONS FOR PIPE TYPE, PIPE SIZE, AND LOCAL ENVIRONMENTAL CONDITIONS. THRUST BLOCKING WILL NOT BE UTILIZED.
2. UTILIZE RAIN BIRD COMMERCIAL GRADE VALVE BOXES.
3. ALL SWING JOINTS FOR SPINKLER HEADS AND QUICK COUPLER VALVES TO UTILIZED TRIPLE TOP SWING JOINTS.
4. REMOTE CONTROLS VALVES TO BE INSTALLED UTILIZING LEEMCO DUCTILE IRON SADDLES AND LEEMCO LV212 DUCTILE IRON ANGLE VALVES FOR ISOLATION.

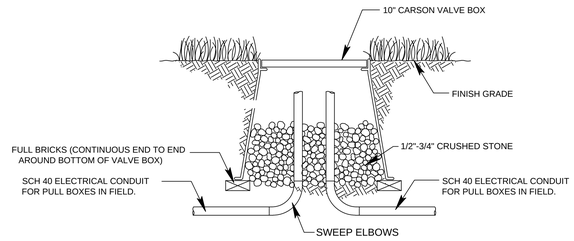

H CONDUIT PULL BOX

NTS

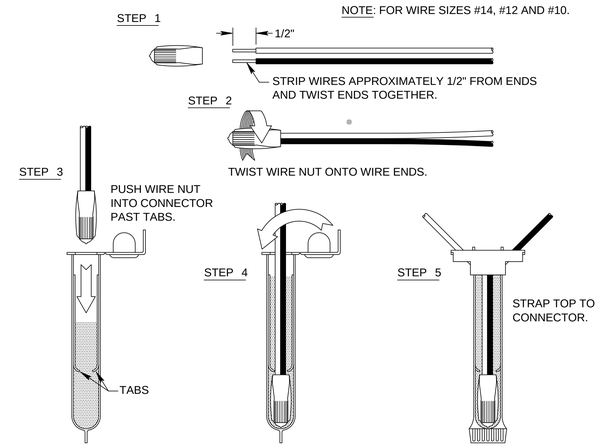

I WIRE SPLICES

NTS

3M DBR/Y-6

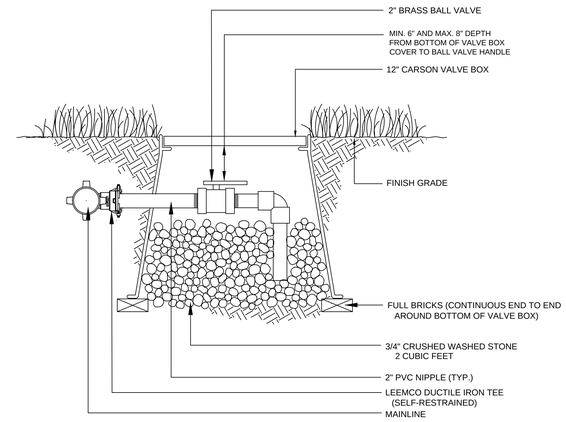

J MANUAL DRAIN VALVE

NTS

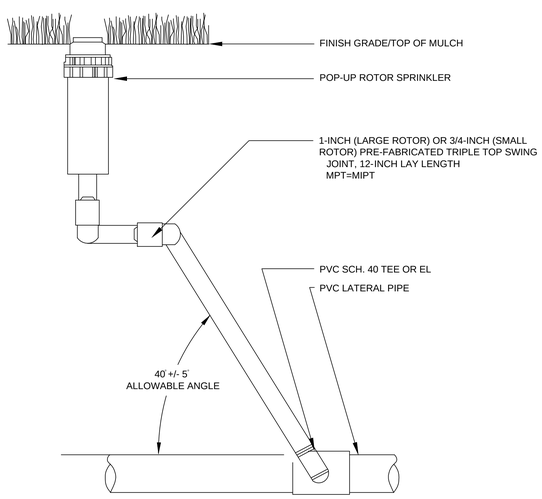

NOTES:
1. INSTALL SWING JOINT LAY ARM BETWEEN 30° AND 45° OF LATERAL PIPE IN ORDER TO ABSORB DOWNWARD IMPACT. IF SWING JOINT CAN NOT BE INSTALLED AT SPECIFIED ANGLE. CONSULT RESIDENT ENGINEER PRIOR TO INSTALLATION OF SWING JOINT.

K TURF ROTOR

NTS

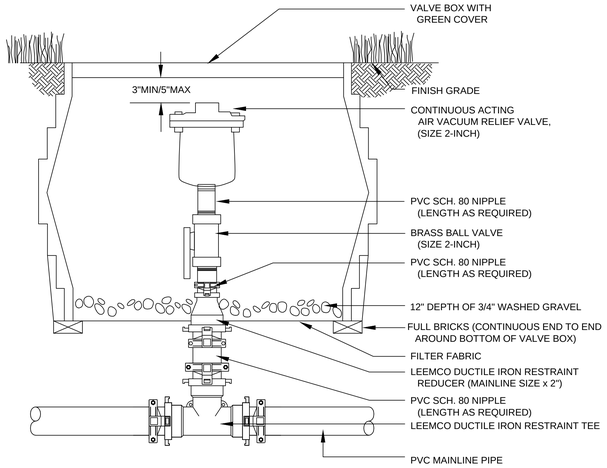

NOTES:
1. INSTALL VALVE BOX SO THERE IS A CLEARANCE OF 2" BETWEEN THE BOTTOM OF THE VALVE BOX AND THE MAINLINE PIPE.
2. INSTALL FILTER FABRIC AROUND EXTERIOR OF VALVE BOX. USE DUCT TAPE TO SECURE FABRIC TO PIPE AND VALVE BOX.
3 LABEL VALVE BOX COVER PER SPECIFICATIONS.

L AIR-VACUUM RELIEF VALVE

NTS

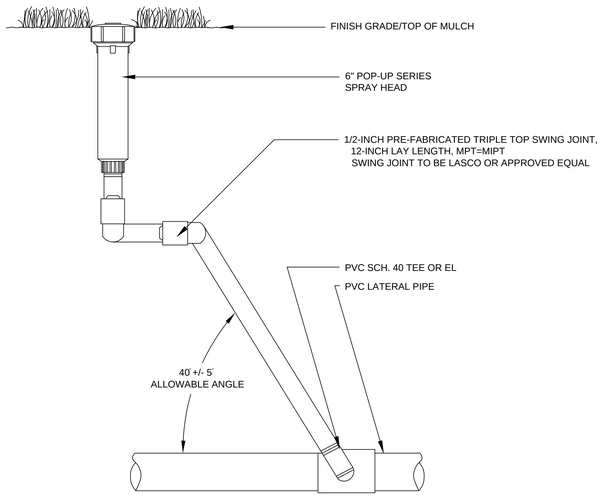

NOTES:
1. INSTALL SWING JOINT LAY ARM BETWEEN 30° AND 45° OF LATERAL PIPE IN ORDER TO ABSORB DOWNWARD IMPACT. IF SWING JOINT CAN NOT BE INSTALLED AT SPECIFIED ANGLE. CONSULT RESIDENT ENGINEER PRIOR TO INSTALLATION OF SWING JOINT.

M LAWN SPRAY HEAD

NTS

BID DOCUMENTS

Revisions	Date

PRIME:
amec foster wheeler
AMEC FOSTER WHEELER
ENVIRONMENT & INFRASTRUCTURE
1075 BIG SHANTY ROAD NW,
SUITE 100
KENNESAW, GA. 30144
(770) 421-3400
AMEC PROJECT: 6166-15-0011

MEP ENGINEER:

GEORGIA REGISTERED No. 769 LANDSCAPE ARCHITECT CHRISTOPHER AUBREY PHILLIPS 10-28-15

IRRIGATION DESIGNER:
Irrigation Consultant Services
2231 Weatherstone Circle
Conyers, GA 30094
(770) 929-0884, fax (770) 760-8025

NATIONAL CEMETERY ADMINISTRATION

Drawing Title: IRRIGATION DETAILS

Project Title: 4000 NICHE COLUMBARIUM GEORGIA NATIONAL CEMETERY

Date: 23 OCTOBER 2015

Project No.: 922CM3005

Approved: Director, Technical Support Service

Building Number | Checked | Drawn

Approved: Chief, Architectual & Engineering Division

Location: 1080 VETERANS CEMETERY RD, CANTON, GA 30114

DRAWING NO. I-104

Sheet 30 Of 31

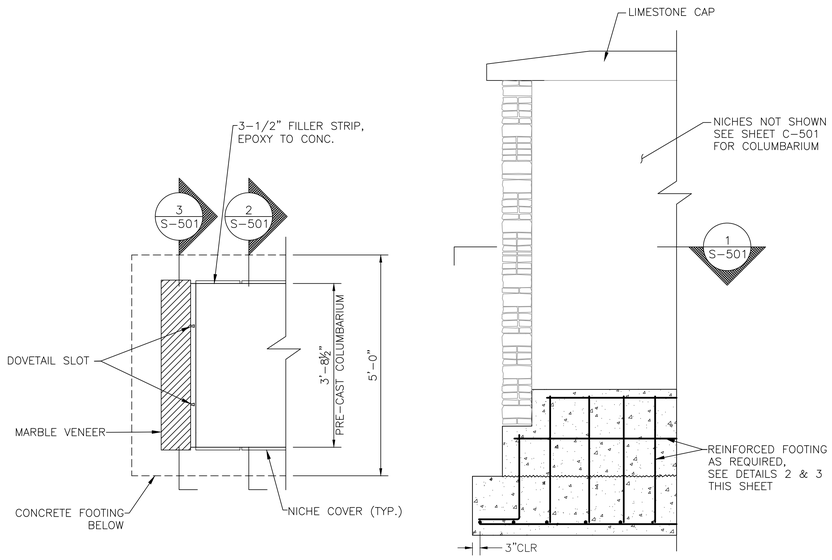

PLAN VIEW

SECTION

1 COLUMBARIUM FOOTING PLAN & ELEV. SECTION
N.T.S.

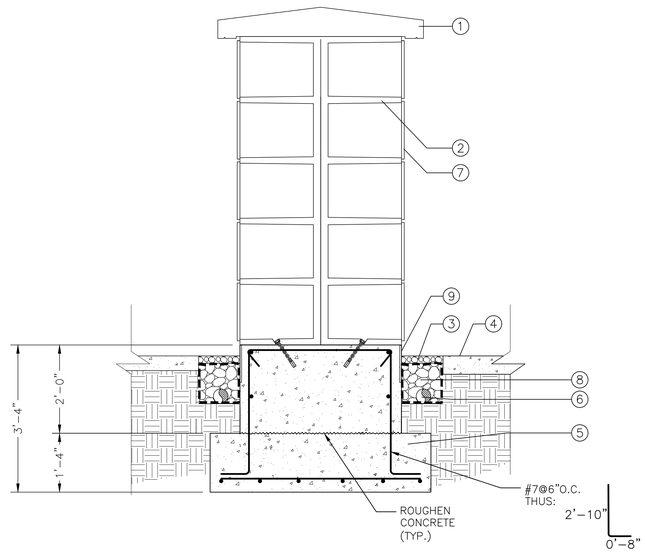

2 COLUMBARIUM FOOTING SECTION 1 OF 2
N.T.S.

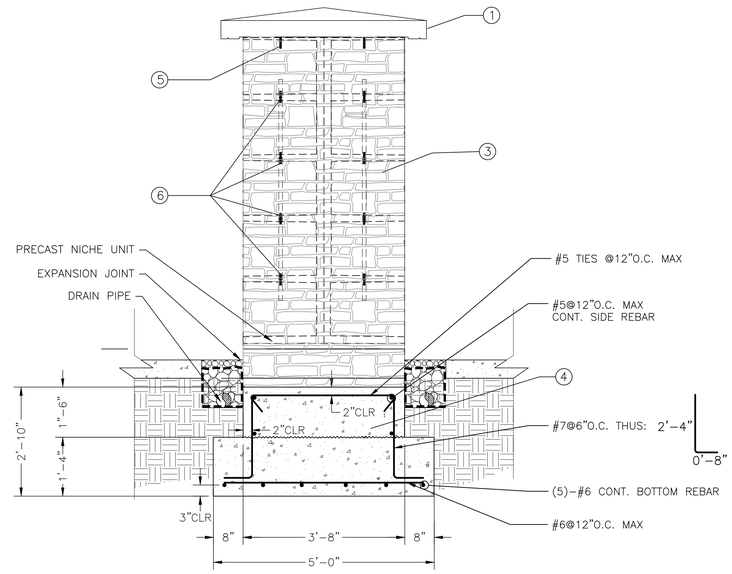

3 COLUMBARIUM FOOTING SECTION 2 OF 2
N.T.S.

1. CUT STONE COLUMBARIUM WALL CAP SEE DETAIL 7 SHEET C-501
2. PRECAST COLUMBARIUM WALL UNIT
3. 12" WIDE DECORATIVE GRAVEL STRIP, 1/2" BELOW ADJACENT FINISH GRADE. 6" MIN. DEPTH OF CRUSHED MARBLE GRAVEL
4. FINISH GRADE AT CONCRETE WALK
5. CAST-IN-PLACE CONCRETE, f'c=4KSI WITH 6% AIR-ENTRAINEMENT
6. 4" PVC PERFORATED DRAIN PIPE. CONNECT TO STORM DRAIN
7. NICHE COVER
8. WASHED #57 STONE WRAPPED WITH NON-WOVEN FILTER FABRIC
9. 12" HIGH POLISHED BLACK GRANITE TILE 3/4" THICK, ON 1" RECESS IN FOOTER

1. CUT STONE COLUMBARIUM WALL CAP SEE DETAIL 7 SHEET C-501
2. NOT USED
3. MARBLE VENEER, SEE SHEET C-501
4. CAST-IN-PLACE CONCRETE, f'c=4KSI WITH 6% AIR-ENTRAINMENT
5. HECKMANN #141 S.S. OR APPROVED EQUAL, THK MIN. = 3/16" WIDTH MIN. = 1" YIELD STR. = 36 KSI
6. HECKMANN #103 S.S. DOVETAIL TRIANGULAR ANCHOR OR APPROVED EQUAL, YIELD STR. = 36 KSI

BID DOCUMENTS

Revisions	Date

PRIME:
amec foster wheeler
AMEC FOSTER WHEELER
ENVIRONMENT & INFRASTRUCTURE
1075 BIG SHANTY ROAD NW,
SUITE 100
KENNESAW, GA. 30144
(770) 421-3400
AMEC PROJECT: 6166-15-0011

MEP ENGINEER:

GEORGIA REGISTERED No. 15855 PROFESSIONAL ENGINEER JAMES L. STUDER

IRRIGATION DESIGNER:
Irrigation Consultant Services
2231 Weatherstone Circle
Conyers, GA 30094
(770) 929-0884, fax (770) 760-8025

NATIONAL CEMETERY ADMINISTRATION

Drawing Title: COLUMBARIUM FOOTING DETAILS

Project Title: 4000 NICHE COLUMBARIUM
GEORGIA NATIONAL CEMETERY

Date: 23 OCTOBER 2015

Project No. 922CM3005

Approved: Director, Technical Support Service

Building Number | Checked | Drawn

Approved: Chief, Architectual & Engineering Division

Location: 1080 VETERANS CEMETERY RD, CANTON, GA 30114

DRAWING NO. S-501

Sheet 31 Of 31