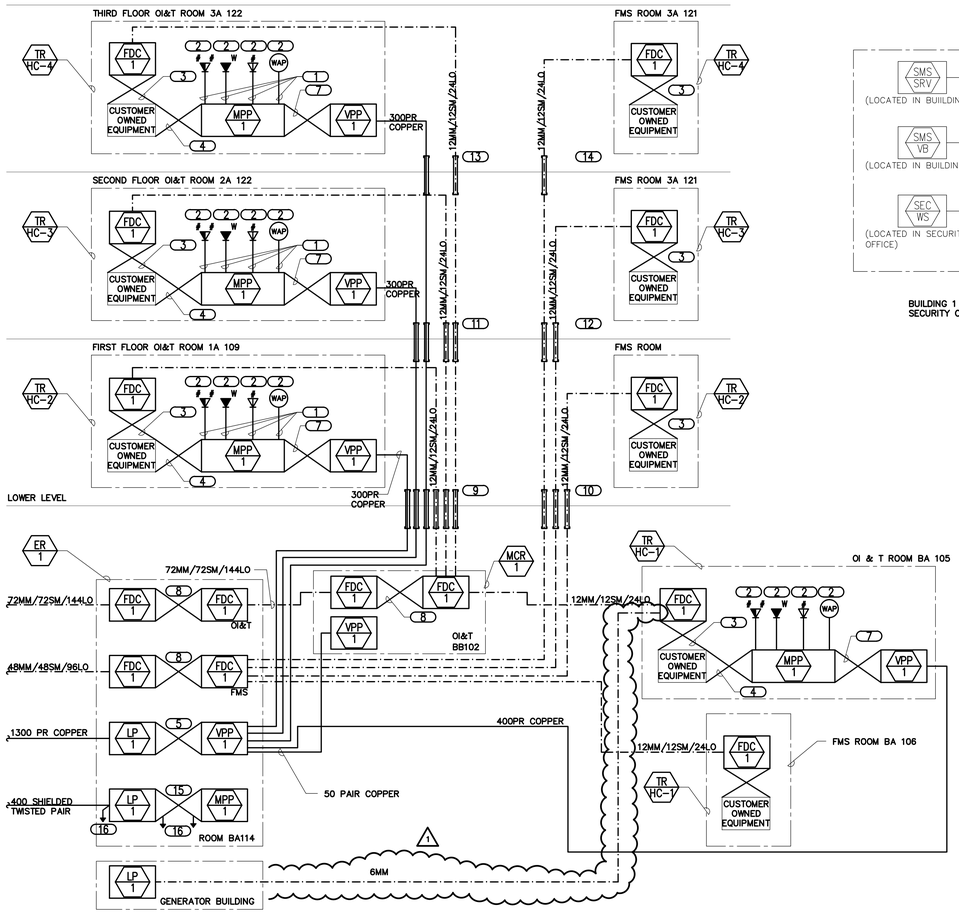

1 TECHNOLOGY RISER DIAGRAM

NO SCALE

NOTES:

1. THIS RISER IS DIAGRAMATIC AND MAY NOT SHOW ACTUAL ROUTING OR QUANTITIES OF MATERIALS SHOWN. THIS RISER IS SHOWN FOR CLARIFICATION OF CONNECTION LOCATIONS AND CABLE TYPE. ALL INFORMATION OUTLETS ARE TYPICAL OF THE OUTLETS IN THE AREA SHOWN. SEE PLANS FOR MORE SPECIFIC ROUTING INFORMATION. SEE SPECIFICATIONS FOR ADDITIONAL REQUIREMENTS.

2. LEGEND:
   FIBER — · — · —
   COPPER ————————
   MM – MULTIMODE FIBER OPTIC CABLE (62.5μM)
   SM – SINGLEMODE FIBER OPTIC CABLE
   LO – LASER OPTIMIZED FIBER OPTIC CABLE (50μM)
   OI & T – OFFICE OF INFORMATION AND TECHNOLOGY
   FMS – FACILITIES MANAGEMENT SERVICE

KEYNOTES:

1. 23 GAUGE, 4–PAIR, CATEGORY 6, UNSHIELDED TWISTED PAIR CABLE TO VOICE & DATA LOCATIONS, SEE SPECIFICATIONS.
2. REFER TO INFORMATION OUTLET SCHEDULE TN500 FOR DETAILS (V, V, V, V, WAP)
3. STRUCTURED CABLING FIBER OPTIC PATCH CORDS. REFER TO SPECIFICATIONS.
4. RJ–45 TO RJ–45 CATEGORY 6 UTP PATCH CORDS. REFER TO SPECIFICATIONS.
5. CROSS–CONNECT 100–PAIR PER BACKBONE RISER CABLE TO THE INCOMING COPPER BACKBONE CABLE.
6. FOUR (4) 4" EMT CONDUIT SLEEVES. POPULATE AS FOLLOWS:
   –(1) SLEEVE FOR COPPER BACKBONE CABLING.
   –(1) SLEEVE FOR FIBER BACKBONE CABLING.
   –(1) SLEEVE FOR 4–PAIR CATEGORY 6 HORIZONTAL CABLING.
   –(1) SLEEVE SPARE.
7. 110 TO RJ–45 CATEGORY 6 UTP PATCH CORDS. REFER TO SPECIFICATIONS.
8. FIBER OPTIC PATCH CORDS MM TO MM, LO TO LO AND SM TO SM REFER TO SPECIFICATIONS.
9. NINE (9) 4" CONDUITS THROUGH CEILING TO ROOM 1A109.
10. NINE (9) 4" CONDUITS THROUGH CEILING TO ROOM
11. SIX (6) 4" CONDUITS THROUGH CEILING TO ROOM 2A122.
12. SIX (6) 4" CONDUITS THROUGH CEILING TO ROOM 2A121.
13. THREE (3) 4" CONDUITS THROUGH CEILING TO ROOM 3A122.
14. THREE (3) 4" CONDUITS THROUGH CEILING TO ROOM 3A121.
15. CROSS–CONNECT 100–PAIR SHIELDED PER BACKBONE RISER CABLE TO THE INCOMING COPPER BACKBONE CABLE.

    CONNECT THE SHIELD OF THE 400 PAIR SHIELDED AND 100 PAIR SHIELDED TWISTED PAIR CABLE TO TELECOMMUNICATIONS GROUND BUSBAR.

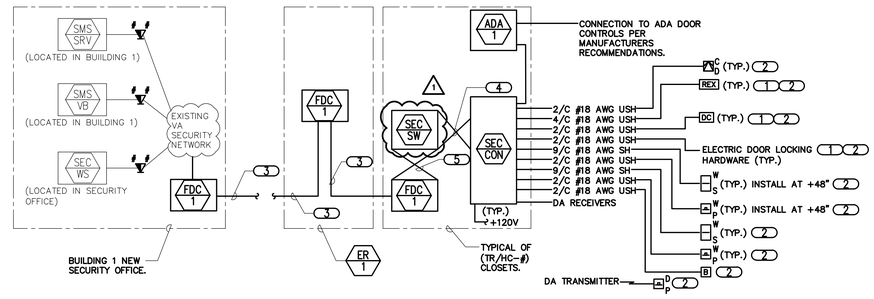

2 ACCESS CONTROL RISER DIAGRAM

NO SCALE

NOTES:

1. THIS DIAGRAM IS DIAGRAMMATIC AND MAY NOT SHOW ACTUAL DEVICE QUANTITIES OR LOCATIONS. ALL DEVICES SHOWN ARE TYPICAL AND MAY NOT REFLECT EVERY WIRE OR CONNECTION THAT MUST BE MADE. WIRING SHOWN ON THIS DIAGRAM REFLECTS THE REQUIREMENTS FOR THE BASIS OF DESIGN MANUFACTURER. ANY CHANGES REQUIRED DUE TO THE T.C.'S SELECTION OF AN ALTERNATE MANUFACTURER, INCLUDING ANY POWER REQUIRED FOR FIELD LOCATED SECURITY CONTROLLERS, SHALL BE INCLUDED IN THE T.C.'S BID.

2. ALL ACCESS SYSTEMS SHALL BE ON THEIR OWN NETWORK. THEY ARE NOT ALLOWED ON THE VA LAN.

KEYNOTES:

1. THE REQUEST TO EXIT, DOOR CONTACT AND LOCKING DEVICE ITEMS ARE SHOWN AS CSS ON THE FLOOR PLANS.
2. REFER TO FLOOR PLANS FOR LOCATIONS AND LAYOUT OF SECURITY DEVICES.
3. CONTRACTOR SHALL UTILIZE FIBER OPTIC CABLE INSTALLED UNDER THIS CONTRACT. REFER TO 1/TN400 FOR TECHNOLOGY RISER DIAGRAM.
4. RJ45, CATEGORY 6 PATCH CORDS, REFER TO SPECIFICATIONS.
5. SINGLE MODE FIBER OPTIC PATCH CORDS, REFER TO SPECIFICATIONS.

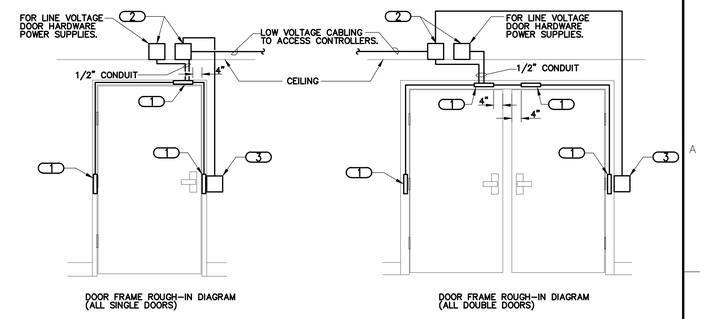

3 DOOR ROUGH-IN AND WIRING DIAGRAMS

NO SCALE

NOTES:

1. WIRING SHOWN ON THESE DIAGRAMS IS FOR BIDDING PURPOSES AND REPRESENTS MINIMUM REQUIREMENTS. COORDINATE EXACT REQUIREMENTS WITH SELECTED MANUFACTURER.
2. DETAILS ABOVE MAY NOT BE REPRESENTATIVE OF SPECIFIC DOOR SWING DIRECTION. MIRROR DETAIL AS REQUIRED.
3. WIRING SHOWN IN CONFIGURATION DETAILS SHALL UTILIZE RELEVANT JUNCTION BOXES SHOWN IN ROUGH–IN DETAIL. ALL WIRING IS CONCEALED IN DOOR FRAME OR DOOR. NO EXPOSED CABLING IS ALLOWED.
4. CONFIGURATIONS SHOWN ARE DIAGRAMMATIC, INTENDED TO DESCRIBE THE SECURITY REQUIREMENTS OF THE DOORS. THEY ARE NOT INTENDED TO ACCURATELY REPRESENT DOOR SIZE, DOOR FUNCTIONALITY OR DOOR HARDWARE. REFER TO ARCHITECTURAL DOOR HARDWARE GROUPS AND SPECIFICATION FOR COMPLETE INFORMATION.
5. ALL DOOR POSITION SWITCHES SHALL BE RECESSED, CONCEALED TYPE UNLESS OTHERWISE NOTED.
6. ALL CABLING IN WALLS AND WHEN EXPOSED ON VERTICAL SURFACES, (I.E., THE OVERHEAD DOOR FRAME) SHALL BE ROUTED IN MINIMUM 1/2" EMT CONDUIT. EXPOSED CABLING TRAVELING HORIZONTALLY ALONG THE CEILING DECK OR ABOVE A LAY–IN CEILING MAY BE PLENUM RATED EXPOSED CABLING.
7. ELECTRIC HINGE MONITORS ARE NOT ACCEPTABLE REPLACEMENTS FOR THE CONCEALED DOOR POSITION SWITCHES.
8. REFER TO FLOOR PLANS FOR CARD READER LOCATIONS.

KEYNOTES:

1. PROVIDE A JUNCTION BOX IN THE DOOR FRAME WHERE SHOWN ON THE DETAIL. ROUGH–IN SHALL BE PROVIDED WHETHER THE CURRENT SECURITY SCHEME UTILIZES THEM OR NOT. CONNECT THE JUNCTION BOXES IN THE VERTICAL SECTIONS OF THE DOOR FRAME TO THE BOX IN THE HEADER WITH 3/8" FLEXIBLE CONDUIT.
2. MOUNT 2 DOUBLE GANG BACKBOXES WITH BLANK COVER PLATES ABOVE THE CEILING. MAINTAIN ACCESS TO JUNCTION BOX WHERE CEILING IS A GYPSUM BOARD CEILING, LOCATE BOXES ABOVE NEAREST LAY–IN CEILING AND EXTEND CONDUITS TO THIS LOCATION.
3. PROVIDE A JUNCTION BOX FOR CARD READER. PROVIDE ONE (1) 1 1/4" CONDUIT TO ACCESS CONTROL JUNCTION BOX AS SHOWN. MOUNT TOP OF BOX AT 48" AFF MAX.

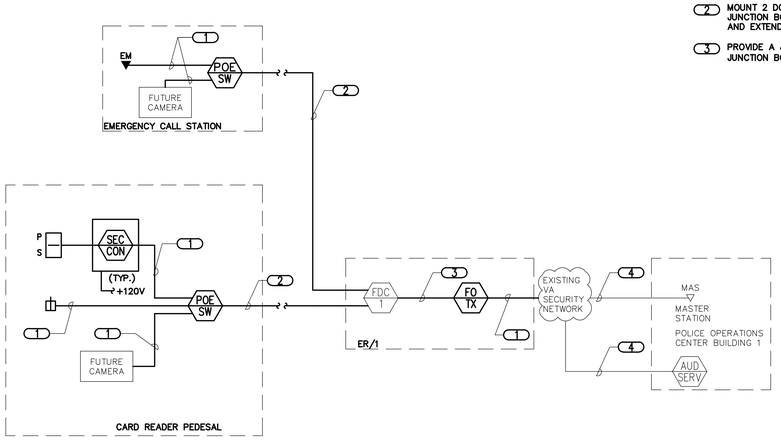

4 SITE ACCESS CONTROL/EMERGENCY CALL STATION/INTERCOM RISER DIAGRAM

NO SCALE

NOTES:

1. THIS DIAGRAM IS DIAGRAMMATIC AND MAY NOT SHOW ACTUAL DEVICE QUANTITIES OR LOCATIONS. ALL DEVICES SHOWN ARE TYPICAL AND MAY NOT REFLECT EVERY WIRE OR CONNECTION THAT MUST BE MADE. WIRING SHOWN ON THIS DIAGRAM REFLECTS THE REQUIREMENTS FOR THE BASIS OF DESIGN MANUFACTURER. ANY CHANGES REQUIRED DUE TO THE T.C.'S SELECTION OF AN ALTERNATE MANUFACTURER, INCLUDING ANY POWER REQUIRED FOR FIELD LOCATED SECURITY CONTROLLERS, SHALL BE INCLUDED IN THE T.C.'S BID.

2. LOCATE MASTER STATION IN SECURITY OFFICE LOCATED IN BUILDING 1. UTILIZE EXISTING NETWORK CABLING LOCATIONS IN SECURITY OFFICE. COORDINATE LOCATION WITH OWNER PRIOR TO INSTALLATION.

KEYNOTES:

1. CATEGORY 6 PATCH CORD. REFER TO SPECIFICATIONS.
2. SIX STRANDS MM FIBER OPTIC CABLE. REFER TO SPECIFICATIONS.
3. FIBER OPTIC PATCH CORD. REFER TO SPECIFICATIONS.
4. CATEGORY 6 WORKSTATION CORD. REFER TO SPECIFICATIONS.
5. CARD READER CABLE. REFER TO SPECIFICATIONS.

PLAN TRUE

FULLY SPRINKLERED

No.	Date	Revisions
#1	April 4, 2013	Amendment 4

VA FORM 08–6231

CONSULTANTS:

STRUCTURAL ENGINEER:
KPFF CONSULTING ENGINEERS
1630 DES PERES ROAD, SUITE 100
ST. LOUIS, MO 63131
PHONE: (314) 835-0524

MECHANICAL/ELECTRICAL/PLUMBING:
KJWW ENGINEERING CONSULTANTS
#15 SUNNEN DRIVE, SUITE 104
ST. LOUIS, MO 63143
PHONE: (314) 645-1132

CODE CONSULTANT/FIRE PROTECTION:
CODE CONSULTANTS, INC.
2043 WOODLAND PARKWAY, SUITE 300
ST. LOUIS, MO 63146
PHONE: (314) 991-2633

CIVIL ENGINEER:
STOCK & ASSOCIATES CONSULTING ENGINEERS, INC.
257 CHESTERFIELD BUSINESS PARKWAY
CHESTERFIELD, MO 63005
PHONE: (636) 530-9100

AUTOMATIC TRANSPORT:
LERCH BATES INC.
8089 S. LINCOLN STREET, SUITE 207
LITTLETON, CO 80122
PHONE: (720) 283-8182

ESTIMATING:
KWAME BUILDING GROUP, INC.
1204 WASHINGTON AVENUE, SUITE 200
ST. LOUIS, MO 63103
PHONE: (314) 862 5344

HAZARDOUS MATERIALS:
ALTEC ENVIRONMENTAL CONSULTING, LLC
P.O. BOX 17867
SHREVEPORT, LA 71138-0867
PHONE: (318) 687-3771

IRRIGATION CONSULTANTS:
IRM
9502 BANYON TREE
ST. LOUIS, MO 63126
PHONE: (318) 843-1461

CERTIFICATE OF AUTHORITY:

STATE OF MISSOURI — JAMES W. CHRISTNER — NUMBER PE-2004000099 — PROFESSIONAL ENGINEER — 29 JANUARY 2012

ARCHITECT/ENGINEERS:

CHRISTNER

ARCHITECTS | DESIGNERS | PLANNERS | LANDSCAPE ARCHITECTS

168 N. MERAMEC AVENUE | ST. LOUIS, MISSOURI 63105
TEL 314 725 2927 | FAX 314 725 2928 | CHRISTNERINC.COM

THE SEAL (S) AND SIGNATURE(S) APPLY ONLY TO THE DOCUMENT TO WHICH THEY ARE AFFIXED, AND WE EXPRESSLY DISCLAIM ANY RESPONSIBILITY FOR ALL OTHER PLANS, SPECIFICATIONS, ESTIMATES, REPORTS, OR OTHER DOCUMENTS OR INSTRUMENTS RELATING TO OR INTENDED TO BE USED FOR ANY PART OF PARTS OF THE PROJECT.
© COPYRIGHT 2012 CHRISTNER INC.

Drawing Title: TECHNOLOGY RISER DIAGRAMS

Approved: Project Director

Project Title: TENANT BUILDING

Location: JEFFERSON BARRACKS DIVISION

Date: 29 OCTOBER 2012 | Checked: DARHAR | Drawn: KEIEVE

Project Number: 657-313D

Building Number: 56

Drawing Number: TN400

Dwg. 128 of 153

Office of Construction and Facilities Management

Department of Veterans Affairs