THAN ONE PIECE.
B. SPACE, ADJUST, AND ALIGN JOISTS ACCURATELY IN LOCATION BEFORE PERMANENTLY FASTENING.
C. INSTALL TEMPORARY BRACING AND BRIDGING, CONNECTIONS AND ANCHORS TO INSURE JOISTS ARE STABILIZED DURING CONSTRUCTION.

28. CONTRACTOR SHALL FIELD WELD JOISTS TO SUPPORTING STEEL FRAMEWORK AND STEEL BEARING PLATES. COORDINATE WELDING SEQUENCE AND PROCEDURE WITH THE PLACING OF JOISTS. ALL WELDING SHALL BE DONE BY CERTIFIED WELDERS AND COMPLY WITH THE LATEST AWS REQUIREMENTS FOR QUALITY OF WELDS AND METHODS USED IN CORRECTING WELDING WORK.
29. BOLT JOISTS TO SUPPORTING STEEL FRAMEWORK USING CARBON STEEL BOLTS, UNLESS OTHERWISE INDICATED.
30. BOLT JOISTS TO SUPPORTING STEEL FRAMEWORK USING HIGH-STRENGTH STRUCTURAL BOLTS WHERE INDICATED ON STRUCTURAL DRAWINGS OR JOIST SHOP DRAWINGS. THE INSTALLATION ON THE HIGH-STRENGTH BOLT PER RESEARCH COUNCIL ON STRUCTURAL CONNECTIONS' (RCSC) "SPECIFICATION FOR STRUCTURAL JOINTS USING ASTM A325 OR ASTM A490 BOLTS" FOR HIGH-STRENGTH STRUCTURAL BOLT INSTALLATION AND TIGHTENING REQUIREMENTS.
31. INSTALL AND CONNECT BRIDGING CONCURRENTLY WITH THE JOIST ERECTION, BEFORE CONSTRUCTION LOADS ARE APPLIED. ANCHOR ENDS OF BRIDGING LINES AT TOP AND BOTTOM CHORDS WHERE TERMINATING AT WALLS OR BEAMS PER JOIST MANUFACTURER'S DETAILS.
32. CONTRACTOR SHALL HIRE A QUALIFIED INDEPENDENT TESTING AGENCY TO PERFORM QUALITY CONTROL TESTING FOR JOIST INSTALLATION. TESTING AGENCY SHALL PROVIDE WRITTEN REPORTS PROMPTLY TO CONTRACTOR AND ARCHITECT. CONTRACTOR SHALL FIX OR REPAIR ALL DEFICIENCIES FOUND DURING TESTING AND TESTING AGENCY SHALL RE-INSPECT WORK.

METAL DECK

1. CONTRACTOR AND METAL DECK SUPPLIER SHALL SUBMIT THE FOLLOWING:
   A. PRODUCT DATA
   B. MANUFACTURING CERTIFICATES
   C. SHOP DRAWINGS PROVIDING THE FOLLOWING:
      1. LAYOUT AND TYPES OF DECK PANELS
      2. ANCHORAGE DETAILS
      3. REINFORCING CHANNELS AND PANS
      4. DECK OPENINGS
      5. SPECIAL JOINTING ACCESSORIES
      6. ATTACHMENTS TO OTHER UNITS
2. CONTRACTOR SHALL INSTALL METAL DECK USING CERTIFIED WELDERS AND COMPLY WITH ALL APPLICABLE PROVISIONS OF AWS D1.1 " STRUCTURAL WELDING CODE FOR STEEL" AND AWS D1.3 " STRUCTURAL WELDING CODE FOR SHEET STEEL".
3. CONTRACTOR SHALL PROVIDE VALID QUALIFICATION CERTIFICATES FOR ALL WELDERS.
4. MANUFACTURER SHALL PROVIDE LABELED STEEL DECK PANELS IDENTICAL TO THOSE TESTED AS PART OF AN ASSEMBLY FOR FIRE RESISTANCE PER ASTM E119 BY A TESTING AND INSPECTION AGENCY PERFORMING TESTING AND FOLLOW-UP SERVICES, THAT IS ACCEPTABLE TO AUTHORITIES HAVING JURISDICTION.
5. PANELS SHALL BE FABRICATED WITHOUT TOP-FLANGE STIFFENING GROOVES CONFORMING TO SDI PUBLICATION NO. 28 "SPECIFICATIONS AND COMMENTARY FOR STEEL ROOF DECK"
6. ROOF DECK SHALL CONFORM TO TYPE AND GAGE SHOWN ON THE PLANS.
7. FLOOR DECK SHALL ROLLED FROM GALVANIZED SHEET STEEL CONFORMING TO ASTM A446, GRADE A WITH A G60 GALVANIZED COATING ACCORDING TO ASTM A525 UNLESS OTHERWISE NOTED.
8. MANUFACTURER SHALL DESIGN AND PROVIDE ALL NECESSARY ACCESSORIES FOR ROOF AND FLOOR OPENINGS AND PANEL EDGES.
9. METAL DECK SHALL BE INSTALLED ACCORDING TO APPLICABLE SPECIFICATIONS AND COMMENTARY OF SDI PUBLICATION NO. 28 AND MANUFACTURERS RECOMMENDATIONS, AND THE FOLLOWING REQUIREMENTS:
   A. PLACE PANELS ON SUPPORTING FRAMING AND ADJUST TO FINAL POSITION WITH ENDS ACCURATELY ALIGNED AND BEARING ON SUPPORTING FRAMING BEFORE BEING PERMANENTLY FASTENED.
   B. CONTRACTOR SHALL STRETCH OR CONTRACT SIDE LAP INTERLOCKS.
   C. PLACE DECK PANELS FLAT AND SQUARE AND FASTEN TO SUPPORTING FRAMING WITHOUT WARP OR DEFLECTION.
   D. CUT, REINFORCE, AND NEATLY FIT DECK PANELS AND ACCESSORIES AROUND OPENINGS AND OTHER WORK PROJECTING THROUGH OR ADJACENT TO THE DECKING.
   E. COMPLY WITH AWS REQUIREMENTS AND PROCEDURES FOR MANUAL SHIELDED METAL ARC WELDING, APPEARANCE AND QUALITY OF WELDS, AND METHODS USED IN CORRECTING WELDING WORK.
   F. INSTALL ALL NECESSARY ROOF ACCESSORIES PER MANUFACTURER'S RECOMMENDATIONS. THESE ITEMS INCLUDE SUMP PANS, SUMP PLATES, RIDGE AND VALLEY PLATES, FINISH STRIPS, COVER PLATES, END CLOSURES AND REINFORCING CHANNELS.
   G. CONTRACTOR SHALL PREPARE AND REPAIR ALL DAMAGED GALVANIZED COATINGS ON BOTH SURFACES WITH GALVANIZED REPAIR PAINT ACCORDING TO ASTM A780 AND MANUFACTURER'S INSTRUCTIONS.

MASONRY VENEER

1. AT MASONRY VENEER WITH METAL OR WOOD STUD BACKUP USE DW10 BY HOHMANN BARNARD. VENEER ANCHORS SHALL BE ANCHORED DIRECTLY TO METAL OR WOOD STUDS. ANCHOR SPACING SHALL BE ADJUSTED TO STUD SPACING.
2. MASONRY VENEER ANCHORS SHALL BE ATTACHED DIRECTLY TO WOOD STUDS WITH 8d COMMON CORROSION RESISTANT NAIL (I.E. GALVANIZED)
3. MASONRY VENEER ANCHORS SHALL BE ATTACHED DIRECTLY TO METAL STUD WITH #10 GALVANIZED SCREWS.
4. ALL MASONRY ANCHORS SHALL BE ADJUSTABLE, CORROSION RESISTANT (I.E. GALV.), AND CONFORM TO LATEST ACI 530. CORRUGATED TIES SHALL NOT BE USED DUE TO UNBRACED LENGTH WITHIN AIR SPACE.
5. MASONRY VENEER ANCHORS SHALL BE SPACED PER WALL SECTION REQUIREMENTS WITH THE FOLLOWING MINIMUMS AND MAXIMUMS:
   A. ANCHORS SHALL BE LOCATED WITHIN 12" OF ALL EDGES OF OPENINGS.
   B. ANCHORS SHALL NOT BE SPACED MORE THAN 16" O.C. VERTICALLY.
   C. ANCHORS SHALL NOT BE SPACED MORE THAN 16" O.C. HORIZONTALLY.
6. CONTRACTOR SHALL PROVIDE 3/16" WEEP HOLES AT MAXIMUM 32" O.C. AT FLASHING LEVEL.
7. CONTRACTOR SHALL GROUT FULLY BEHIND ALL VENEERS BELOW GRADE.
8. CONTRACTOR SHALL GROUT SOLID BELOW BASE FLASHING.
9. VENEERS SHALL NOT EXCEED 33 FT. AT EAVES OR 38 FT. AT GABLES WITHOUT STEEL SUPPORT AT EACH FLOOR LEVEL.
10. PROVIDE #9 GALVANIZED WIRE LONGITUDINAL REINFORCING IN BRICK/MASONRY BLOCK VENEER AT EVERY TIE ELEVATION WITH SEISMIC CLIPS TO TIE FOR SEISMIC DESIGN CATEGORY D. SEE DESIGN CRITERIA NOTE E-7.

LIGHT GAGE METAL FRAMING

1. CONTRACTOR SHALL PROVIDE AND ERECT COLD-FORMED METAL FRAMING WITH FOLLOWING MINIMUM PHYSICAL PROPERTIES WITH MATCHING TRACKS:
   1 5/8" WIDE FLANGES

MEMBER	SSMA DESIGNATION	AREA IN2	Ixx IN4	Iyy IN4	Fy KSI
3 5/8"x16ga. CSJ	362S162-54	0.422	0.873	0.154	50
4"x16ga. CSJ	400S162-54	0.443	1.098	0.159	50
6"x16ga. CSJ	600S162-54	0.556	2.860	0.180	50
8"x16ga. CSJ	800S162-54	0.670	5.736	0.194	50

2. CONTRACTOR AND MANUFACTURER SHALL PROVIDE SHOP DRAWINGS AND PRODUCT DATA ON ALL LIGHT GAGE METAL FRAMING USED ON THIS PROJECT. THE SUBMITTAL SHALL INCLUDE THE FOLLOWING:
   A. MATERIAL MILL CERTIFICATES
   B. SECTION PROPERTIES AND STRENGTHS
   C. WELDER QUALIFICATION CERTIFICATES
   D. ANCHORAGE DETAILS
   E. MANUFACTURER'S STANDARD DETAILS AND INSTALLATION REQUIREMENTS
3. ALL WELDS SHALL COMPLY WITH APPLICABLE PROVISIONS OF AWS D1.1 "STRUCTURAL WELDING CODE FOR STEEL" AND AWS D1.3 "STRUCTURAL WELDING CODE FOR SHEET STEEL".
4. FOR FIRE RATED ASSEMBLIES SHOWN ON ARCHITECTURAL DRAWINGS PROVIDE COLD-FORMED METAL FRAMING IDENTICAL TO THAT TESTED AS PART OF THE ASSEMBLY FOR THE FIRE RESISTANCE PER ASTM E119 BY INDEPENDENT TESTING.
5. FIRE-RESISTANCE RATINGS ARE INDICATED ON ARCHITECTURAL DRAWINGS BY UL "FIRE RESISTANCE DIRECTORY NUMBER" OR BY WARNOCK HERSEY OR OTHER TESTING AND INSPECTING AGENCIES ACCEPTABLE TO AUTHORITIES HAVING JURISDICTION.
6. DELIVERY AND STORAGE
   A. CONTRACTOR SHALL PROTECT COLD-FORMED METAL FRAMING FROM CORROSION, DEFORMATION AND OTHER DAMAGE DURING DELIVERY, STORAGE AND HANDLING.
   B. CONTRACTOR SHALL STORE COLD-FORMED METAL FRAMING WITH A WATERPROOF COVERING AND VENTILATE TO AVOID CORROSION.
   C. CONTRACTOR SHALL FOLLOW ALL MANUFACTURER'S RECOMMENDATIONS FOR HANDLING, ERECTING AND STORAGE.
7. COLD-FORMED SHAPES SHALL BE MANUFACTURED FROM GALVANIZED-STEEL SHEETS CONFORMING TO ASTM A446 WITH A G60 GALVANIZED COATING WITH A MINIMUM YIELD STRENGTH OF 50,000 PSI.
8. ALL FRAMING ACCESSORIES SHALL BE OF THE SAME MATERIAL AND FINISH AS USED IN THE FRAMING MEMBERS WITH A MINIMUM YIELD STRENGTH OF 33,000 PSI.
9. ALL MECHANICAL FASTENERS SHALL BE CORROSION RESISTANT COATED, SELF-DRILLING, SELF-THREADING STEEL DRILL SCREWS WITH LOW-PROFILE HEADS BENEATH SHEATHING AND MANUFACTURER'S STANDARD ELSEWHERE.
10. ALL DAMAGED GALVANIZED AREAS SHALL BE PREPARED AND REPAIRED WITH GALVANIZING REPAIR PAINT ACCORDING TO ASTM A780 AND MANUFACTURER'S INSTRUCTIONS.
11. CONTRACTOR SHALL INSTALL COLD-FORMED METAL FRAMING AND ACCESSORIES PLUMB, SQUARE, TRUE TO LINE AND WITH CONNECTIONS SECURELY FASTENED ACCORDING TO MANUFACTURER'S RECOMMENDATIONS AND REQUIREMENTS OF THIS SECTION. CONTRACTOR SHALL INSTALL THE COLD-FORMED MEMBERS PER THE FOLLOWING:
   A. COLD-FORMED MEMBERS SHALL BE SAWED OR SHEARED. COLD-FORMED MEMBERS SHALL NOT BE TORCH CUT.
   B. FASTEN COLD-FORMED FRAMING MEMBERS BY WELDING OR SCREW FASTENING AS STANDARD WITH THE FABRICATOR. WIRE TYING OF FRAMING IS NOT PERMITTED.
   C. FRAMING MEMBERS SHALL BE INSTALLED IN ONE-PIECE LENGTHS
   D. PROVIDE TEMPORARY BRACING AND LEAVE IN PLACE UNTIL FRAMING IS PERMANENTLY STABILIZED. TEMPORARY BRACING SHALL BE DESIGNED AND FURNISHED BY CONTRACTOR.
   E. INSTALL INSULATION IN MIDDLE OF EXTERIOR BUILT-UP MEMBERS PER ARCH.
   F. INSTALL REINFORCEMENT PLATES OR CHANNELS OVER WEB PENETRATIONS THAT EXCEED SIZE OF MANUFACTURER'S STANDARD PUNCHED OPENINGS. CONTRACTOR SHALL CONTACT MANUFACTURER FOR RECOMMENDED REINFORCING DETAIL.
   G. ALL COLD-FORMED MEMBERS SHALL INSTALLED TO THE FOLLOWING MAXIMUM TOLERANCES:
      1. VARIATION FROM PLUMB, LEVEL AND TRUE TO OF 1/8" IN 10 FEET (1:960)
      2. SPACE INDIVIDUAL FRAMING MEMBERS NO MORE THAN PLUS OR MINUS 1/8" FROM PLAN LOCATION. CUMULATIVE ERROR SHALL NOT EXCEED MINIMUM FASTENING REQUIREMENTS OF SHEATHING OR OTHER FINISH MATERIAL.
      3. INSTALL COLD-FORMED METAL FRAMING TO A MAXIMUM OUT-OF SQUARE TOLERANCE OF 1/8"
   H. INSTALL MANUFACTURER'S STANDARD HORIZONTAL BRIDGING IN ROWS NOT TO EXCEED 4'-0" O.C. VERTICALLY. FASTEN AT EACH STUD INTERSECTION PER MANUFACTURE'S STANDARD DETAIL AND RECOMMENDATIONS.
   J. SET BEAMS AND GIRDERS DIRECTLY ON BUILT UP POSTS OR STEEL COLUMNS WITHOUT SANDWICHING ANY PLATE OR STUD BETWEEN POSTS OR COLUMNS. SET BUILT UP POST ON STEEL, CONCRETE OR BEAMS DIRECTLY WITHOUT SANDWICHING SUB FLOOR, STUDS, JOIST, OR PLATES.
12. CONTRACTOR SHALL INSTALL NON-LOAD BEARING CURTAIN WALL FRAMING PER THE FOLLOWING:
   A. INSTALL, ALIGN AND SECURELY ANCHOR CONTINUOUS TRACKS TO SUPPORTING STRUCTURE. SQUARELY SEAT STUDS AGAINST WEBS OF THE TOP AND BOTTOM TRACKS. SPACE STUDS AS INDICATED; PLUMB, ALIGN AND FASTEN BOTH FLANGES OF THE TOP AND BOTTOM TRACK.
   B. ISOLATE FRAMING FROM THE BUILDING STRUCTURE AT LOCATIONS INDICATED TO PREVENT TRANSFER OF VERTICAL LOADS WHILE PROVIDING LATERAL SUPPORT. ALL DETAILS SHALL BE PER MANUFACTURE'S STANDARDS AND DETAILS.
   C. INSTALL MANUFACTURER'S STANDARD HORIZONTAL BRIDGING IN ROWS NOT TO EXCEED 4'-0" O.C. VERTICALLY. FASTEN AT EACH STUD INTERSECTION PER MANUFACTURE'S STANDARD DETAIL AND RECOMMENDATIONS.
   D. INSTALL MISCELLANEOUS FRAMING AND CONNECTIONS INCLUDING STUD BRACES, WEB STIFFENERS, CLIP ANGLES, CONTINUOUS ANGLES, ANCHORS, FASTENERS AND STUD GIRTS, TO PROVIDE A COMPLETE AND STABLE CURTAIN WALL-FRAMING SYSTEM.

GYPSUM SHEATHING

1. GYPSUM SHEATHING SHALL CONFORM TO ASTM C79 SEE ARCHITECTURAL DRAWINGS FOR LOCATION.
2. GYPSUM WALLBOARD SHALL CONFORM TO ASTM C36 SEE ARCHITECTURAL DRAWINGS FOR LOCATION.
3. NON SHEAR WALL GYPSUM SHEATHING SHALL HAVE THE FOLLOWING MINIMUM NAIL ATTACHMENT:
   A. 1/2" GYPSUM SHEATHING WITH 5d COOLER NAILS AT 7" O.C. AT EDGES AND INTERMEDIATES CONTRACTOR HAS OPTION TO LOCATE (2) NAILS AT 2" O.C. AT 12" O.C. SPACING FOR INTERMEDIATE FASTENING ONLY. 5/8" GYPSUM SHEATHING WITH 6d COOLER NAILS AT 7" O.C. AT EDGES AND INTERMEDIATES.
   B. 5/8" GYPSUM (2 LAYERS) THE FIRST LAYER 6d COOLER NAILS AT 9" O.C. AT EDGES AND INTERMEDIATES. SECOND LAYER 8d COOLER NAILS AT 7" O.C. AT EDGES AND INTERMEDIATES.
4. NON SHEAR WALL GYPSUM SHEATHING SHALL HAVE THE FOLLOWING MINIMUM SCREW ATTACHMENT (IF WALL IS SHEAR WALL, SEE SHEAR WALL SCHEDULE.):
   A. 1/2" GYPSUM SHEATHING #6 SCREW WITH TAPERED HEAD AT 12" O.C.
   B. 5/8" GYPSUM SHEATHING #6 SCREW WITH TAPERED HEAD AT 12" O.C.
5. NAILS SHALL CONFORM TO ASTM C 514 WITH THE FOLLOWING DESCRIPTION:
   A. 5d COOLER NAIL IS DEFINED AS NO. 13 GAGE (.098" DIAMETER X 1 5/8" LONG WITH 15/64 INCH HEAD) NAIL WITH RING SHANKS.
   B. 6d COOLER NAIL IS DEFINED AS NO. 13 GAGE (.098" DIAMETER X 1 7/8" LONG WITH 15/64 INCH HEAD) NAIL WITH RING SHANKS.
6. SCREWS SHALL CONFORM TO ASTM C954 AND C1002 WITH THE FOLLOWING:
   A. DESCRIPTION FOR WOOD FRAMING.
      1. #6 SCREW WITH TAPERED HEAD.
      2. SCREW LENGTH SHALL PENETRATE WOOD FRAMING MINIMUM OF 5/8".
   B. DESCRIPTION FOR METAL FRAMING
      1. #6 SCREW WITH TAPERED HEAD.
      2. SCREW LENGTH SHALL PENETRATE METAL FRAMING MINIMUM OF 1/4".
7. BUILDING CODE OFFICIAL SHALL BE NOTIFIED MINIMUM 24 HOURS IN ADVANCE FOR FRAMING INSPECTION BEFORE INSTALLING GYPSUM. VERIFY WITH LOCAL BUILDING AUTHORITY ADVANCE NOTICE REQUIREMENTS.

HANDRAIL

1. HSS1 1/2x1 1/2x3/16 CAN BE SPACED AT 4'-0" ON CENTER UNDER 2009 IBC HANDRAIL CRITERIA. THE MAXIMUM HEIGHT FOR HSS1 1/2x1 1/2x3/16 IS 2'-10".
2. HSS1 1/2x1 1/2x3/16 CAN BE SPACED AT 4'-0" ON CENTER UNDER 2009 IBC GUARDRAIL CRITERIA, THE MAXIMUM HEIGHT FOR HSS1 1/2x1 1/2x3/16 IS 3'-6".

MECHANICAL ANCHORS

EXPANSION ANCHORS

1. EXPANSION ANCHORS TO BE HILTI KWIK BOLT TZ, SIMPSON WEDGE-ALL, OR APPROVED EQUAL.
2. INSTALLER OF EXPANSION ANCHOR SHALL BE CERTIFIED BY ANCHOR MANUFACTURER FOR PROPER INSTALLATION REQUIREMENTS AND PROCEDURES.

CONCRETE SCREW ANCHORS

1. CONCRETE SCREW ANCHORS TO BE HILTI HUS-H, SIMPSON TITEN HD, OR APPROVED EQUAL.

CHEMICAL ANCHORS

1. ADHESIVE SET STEEL ANCHORS TO BE:
   A. HILTI HIT-HY200 SIMPSON ACRYLIC-TIE, OR APPROVED EQUAL FOR ANCHORS SET IN CONCRETE OR SOLIDLY GROUTED MASONRY.
   B. HILTI HIT-HY20 SIMPSON ACRYLIC-TIE WITH SCREENS OR APPROVED EQUAL FOR ANCHORS SET IN HOLLOW MASONRY.
2. INSTALLER OF CHEMICAL ANCHORS SHALL BE CERTIFIED BY ANCHOR MANUFACTURER FOR PROPER INSTALLATION REQUIREMENTS AND PROCEDURES.

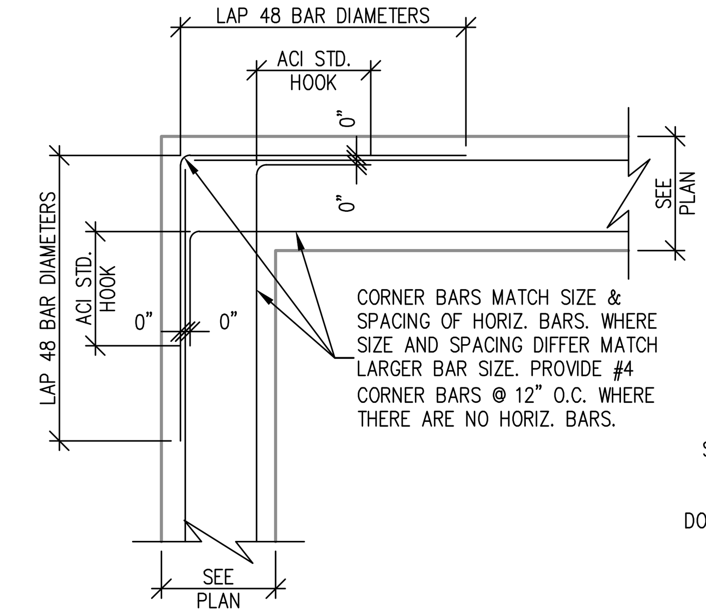

TYPICAL WALL / GRADE BEAM / FOOTING CORNER REINFORCING DETAIL
N.T.S.

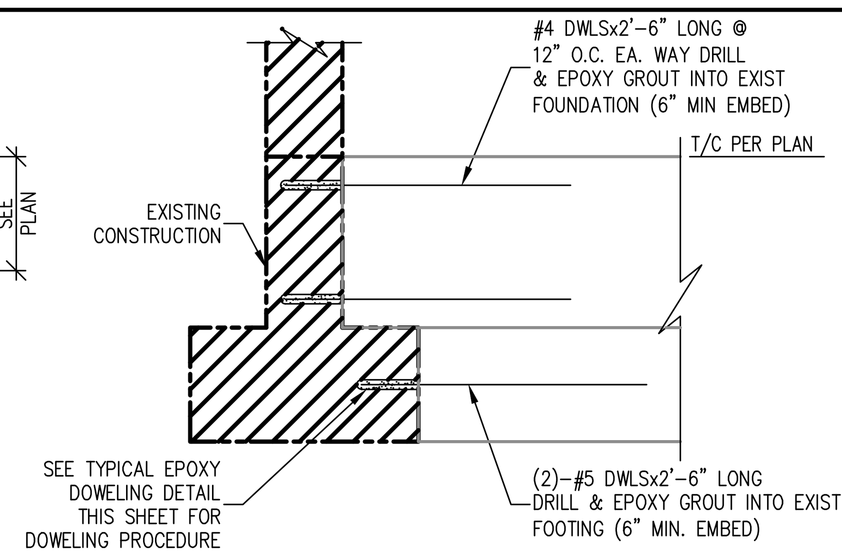

TYPICAL FOUNDATION DOWELING DETAIL
N.T.S.

NOTE:
END OF REBAR BEING INSERTED INTO BASE MATERIAL MUST HAVE A 45° OR CHISEL POINT (90°)

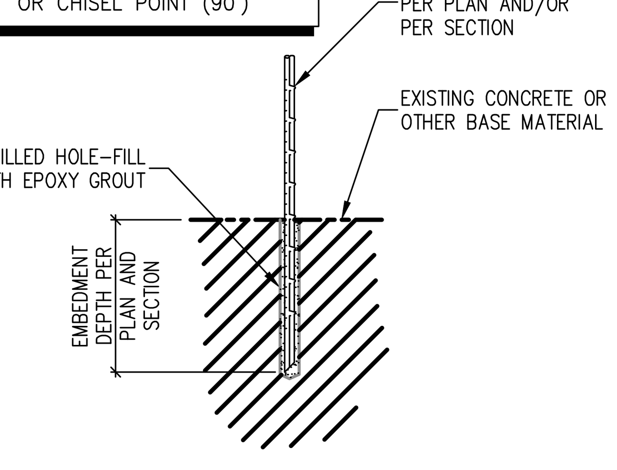

1. DRILL HOLE TO THE REQUIRED DEPTH; APPROX. 1/8" WIDER DIAMETER THAN THE REBAR.
2. CLEAN OUT DUST AND FRAGMENTS; PREFERABLY USING A JET OF WATER OR COMPRESSED AIR AND A NYLON BRUSH. DO NOT USE A WIRE BRUSH.
3. INJECT APPROPRIATE EPOXY GROUT INTO PRE-DRILLED HOLE IN BASE MATERIAL.
4. PLACE CHISEL POINTED END OF REBAR ON TOP OF EPOXY GROUT AND DRIVE REBAR TO BOTTOM OF HOLE.
5. CARE SHOULD BE TAKEN NOT TO DISTURB THE INSTALLED REBAR UNTIL EPOXY GROUT HAS CURED.

TYPICAL EPOXY DOWELING DETAIL
N.T.S.

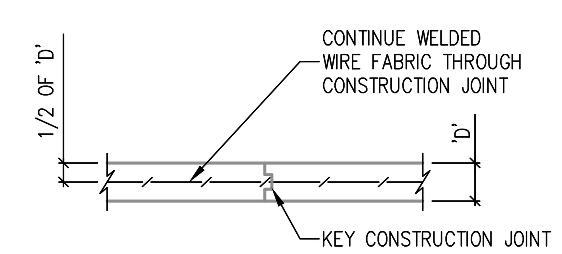

TYPICAL CONSTRUCTION JOINT DETAIL
N.T.S.

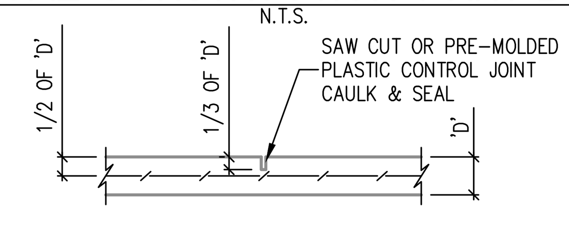

TYPICAL CONTROL JOINT DETAIL
N.T.S.

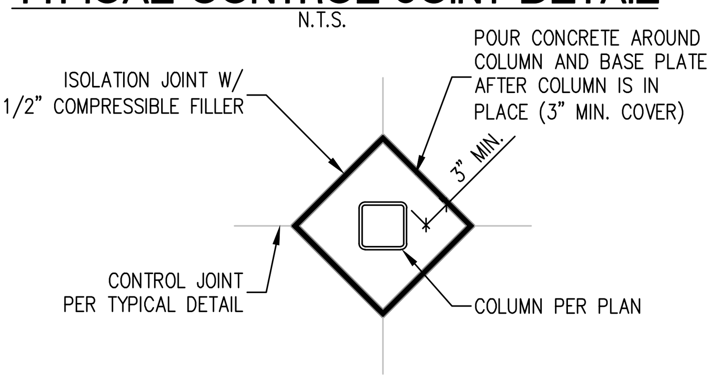

TYPICAL ISOLATION JOINT DETAIL
N.T.S.

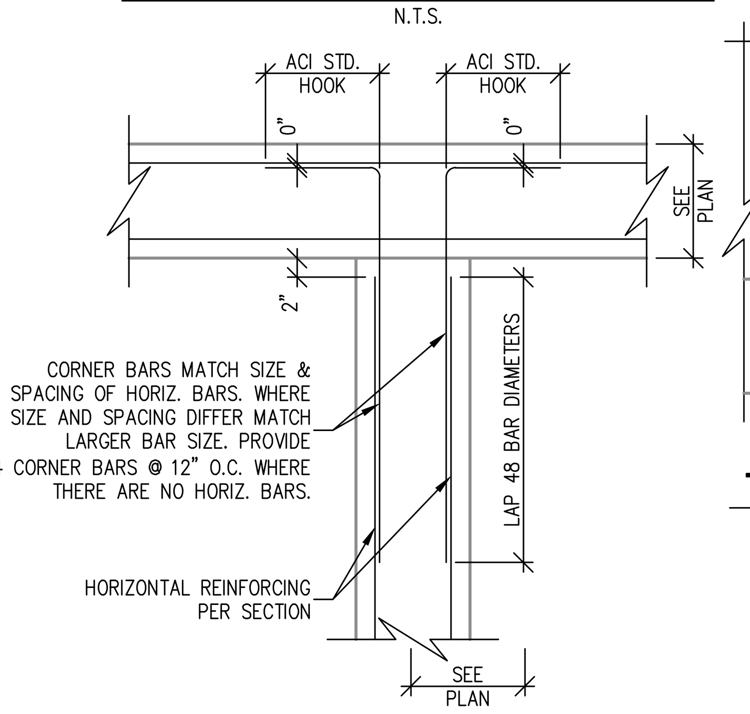

TYPICAL WALL / GRADE BEAM / FOOTING INTERSECTION REINFORCING DETAIL
N.T.S.

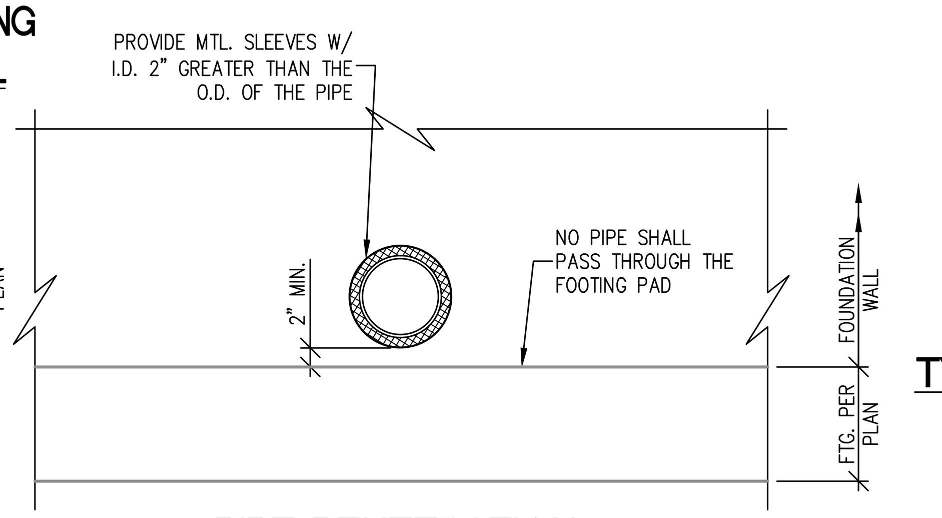

PIPE PENETRATION THROUGH FOUNDATION WALL DETAIL
N.T.S.

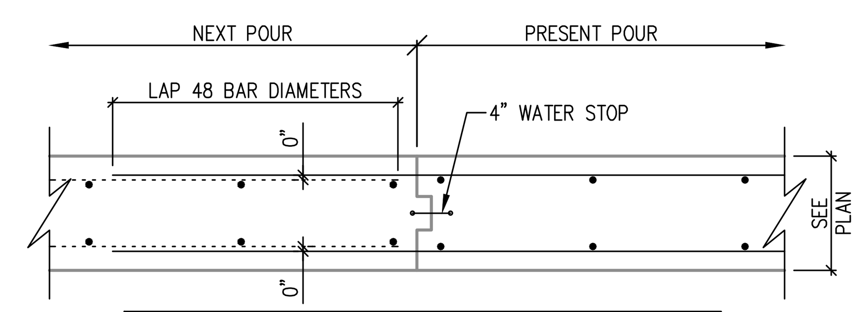

NOTES:
FOR REINFORCING SIZE AND SPACING SEE FOUNDATION SECTIONS.
FOUNDATION WALLS
LOCATE POUR JOINTS AT A MAXIMUM SPACING OF 100'-0"
RETAINING WALLS
LOCATE POUR JOINTS AT A MAXIMUM SPACING OF 25'-0"
LOCATE EXPANSION JOINTS AT A MAXIMUM SPACING OF 50'-0" O.C. AND CONTROL JOINTS AT A MAXIMUM SPACING OF 50'-0" ALTERNATE AT 25'-0" O.C. TYP. U.N.O.

TYPICAL WALL POUR JOINT DETAIL
N.T.S.

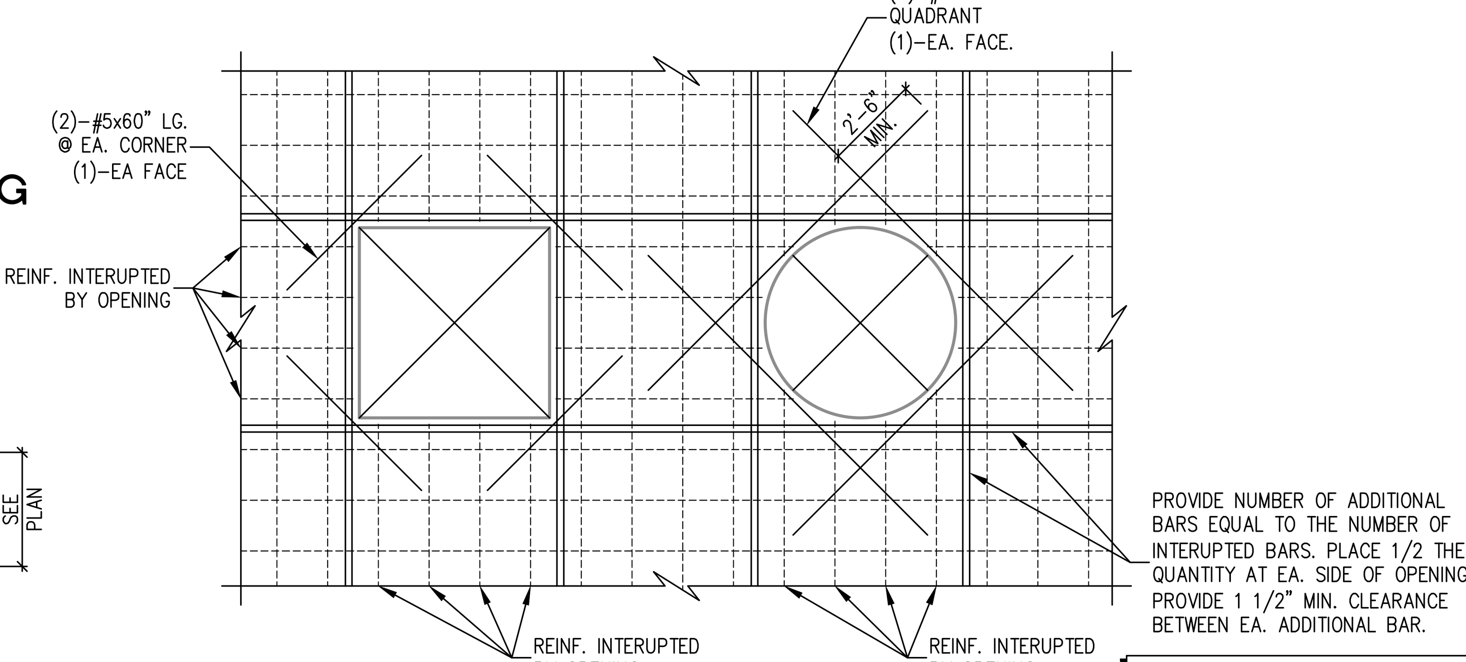

NOTE:
IF THE NUMBER OF INTERUPTED BARS IS AN ODD NUMBER INCREASE THE NUMBER BY ONE.

REINFORCING STEEL AT OPENINGS IN WALLS AND SLABS
N.T.S.

NOTE:
'D' MUST BE MAINTAINED THROUGHOUT FOOTING

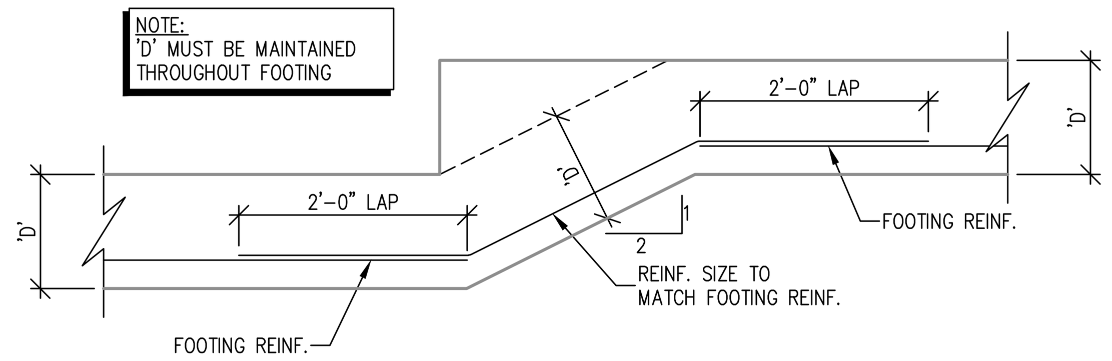

TYPICAL STEPPED FOOTING DETAIL
N.T.S.

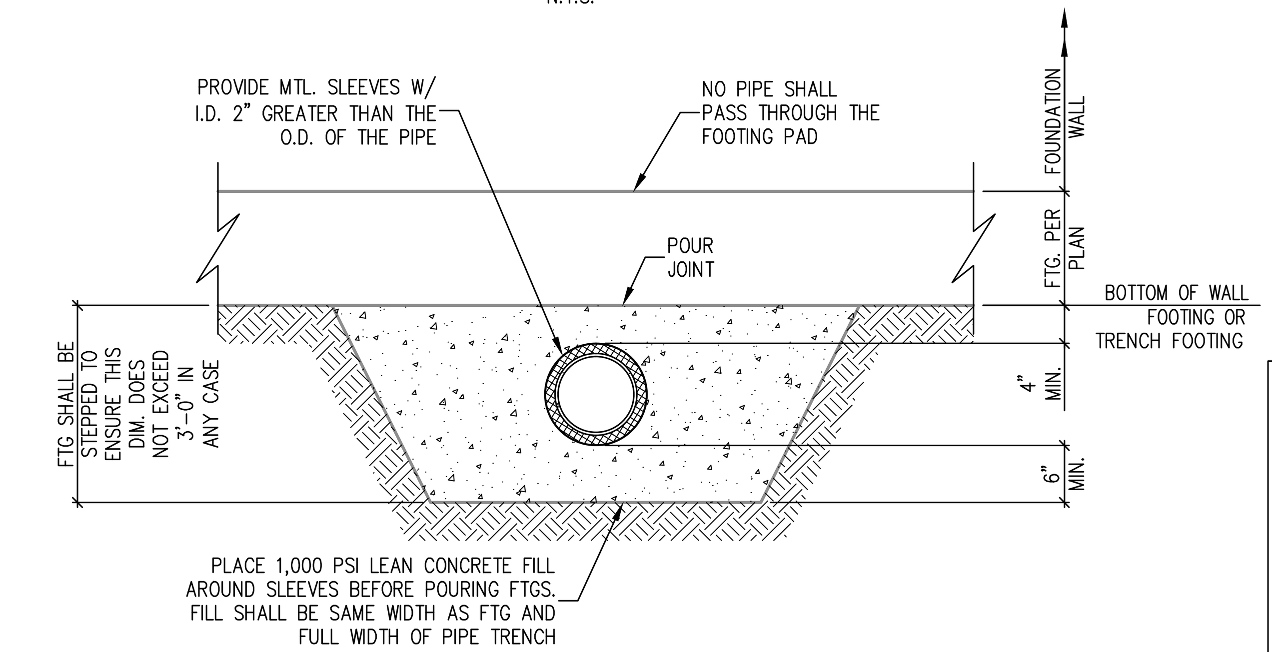

PIPE TRENCH PERPENDICULAR TO FOUNDATION DETAIL
N.T.S.

NOTE:
THE STRUCTURAL DRAWINGS ARE NOT A SET OF STAND-ALONE CONSTRUCTION DOCUMENTS. THESE STRUCTURAL DRAWINGS MUST ONLY BE USED IN CONJUNCTION WITH ARCHITECTURAL AND OTHER RELATED DISCIPLINES DRAWINGS. CONTRACTOR TO VERIFY EXISTING CONDITIONS AND CO-ORDINATE BETWEEN THE STRUCTURAL, ARCHITECTURAL, AND OTHER DISCIPLINES DRAWINGS. ANY DISCREPANCY BETWEEN THE DRAWINGS MUST BE BROUGHT TO THE ARCHITECT AND ENGINEERS ATTENTION FOR RESOLUTION PRIOR TO FABRICATION OR CONSTRUCTING THAT PORTION OF THE STRUCTURE.

NOTE:
THE STRUCTURAL ENGINEER OF RECORD IS NOT RESPONSIBLE FOR MEANS AND METHODS OF CONSTRUCTION INCLUDING TECHNIQUES OF FABRICATION AND SAFETY AT THE CONSTRUCTION SITE. THE CONTRACTOR IS RESPONSIBLE FOR DESIGN AND INSTALLATION OF ALL TEMPORARY SHORING, BRACING, BOLTING, WELDING, LUGS, SEAT ANGLES, ETC. TO SAFELY CONSTRUCT THE PROJECT. THE CONTRACTOR IS TO COORDINATE BETWEEN ARCHITECTURAL, STRUCTURAL AND OTHER DISCIPLINES' DRAWINGS AND TO BRING ANY DISCREPANCY TO THE ATTENTION OF THE ARCHITECT AND ENGINEER PRIOR TO GOING AHEAD WITH CONSTRUCTION OF THAT SECTION.

NOTE:
CONTRACTORS TO COMPLY WITH ALL GOVERNING REGULATIONS AND REQUIREMENTS INCLUDING OSHA REGULATIONS 29 CFR PART 1926 FOR CONSTRUCTION INDUSTRY.

CONTRACT DOCUMENTS

Revisions:	Date

CONSULTANTS:
Z. CHAI, SE
STRUCTURAL ENGINEER (SE 081-005787)
16135 Wilson Manor Dr, Chesterfield, MO 63005
garychai@gcengineer.com www.gcengineer.com
314-303-6825

LICENSED STRUCTURAL ENGINEER ZHAOHUI CHAI 081-005787 STATE OF ILLINOIS 12-28-15

ARCHITECT/ENGINEERS:
MAK ARCHITECTS, INC.
ARCHITECTURE ▪ PLANNING ▪ INTERIOR DESIGN
8328-R Olive Boulevard., St. Louis, Missouri 63132
mak@makarchitects.com www.makarchitects.com
314-997-3802 314-993-3761 (Fax)

Drawing Title: GENERAL NOTE / TYPICAL DETAILS

Approved: Project Director

Project Title: CONSTRUCT NEW DIETETICS
DEPARTMENT OF VETERAN AFFAIRS MEDICAL CENTER

Location: 2401 WEST MAIN STREET, MARION, IL 62959

Date: 1-29-2016 | Checked: G.C. | Drawn:

Project Number: 657A5-10-101
Building Number: Building #2
Drawing Number: S1.2
Dwg. 2 of 11

Office of Construction and Facilities Management
Department of Veterans Affairs

VA FORM 08-6231