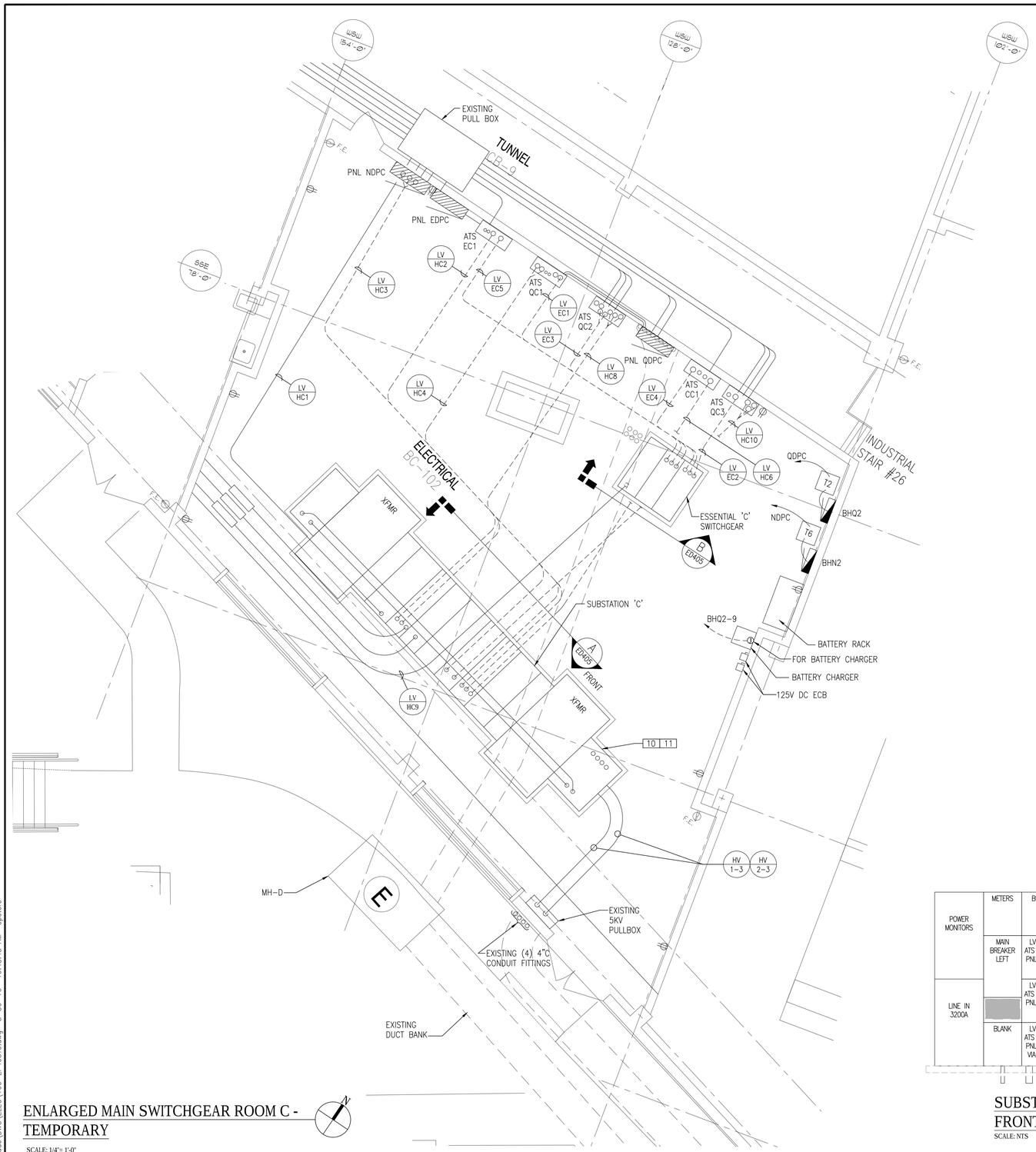

ENLARGED MAIN SWITCHGEAR ROOM C - TEMPORARY

SCALE: 1/4"= 1'-0"

0 1 2 4 8 12
1/4"=1'-0" feet

GENERAL NOTES:

1. REFER TO ARCHITECTURAL, CIVIL, STRUCTURAL, AND MECHANICAL DRAWINGS FOR RELATED WORK NOT SHOWN ON THIS DRAWING.
2. FIELD VERIFY EXISTING CONDITIONS PRIOR TO COMMENCING WORK.
3. REFER TO ENLARGED ELECTRICAL ROOMS PLAN TEMPORARIES DRAWINGS FOR SEQUENCE OF CONSTRUCTIONS.
4. THE EXISTING SCL EAST CAMPUS SERVICE YARD SHALL BE ENLARGED TO IN STAGES TO ACCOMMODATE THE SERVICE UPGRADE FROM 5KV TO 15KV.
5. REFER TO ES800 AND ES801 FOR FEEDER SCHEDULE.

NOTES:

TASK IDENTIFICATION – SEE SEQUENCE OF CONSTRUCTION ON SHEET ES003, ES004 AND ES005.

10 11

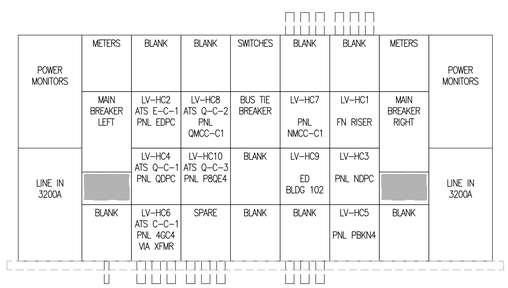

SUBSTATION "C" SWITCHGEAR FRONT ELEVATION (A)

SCALE: NTS

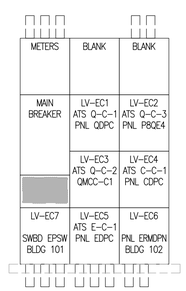

ESSENTIAL "C" SWITCHGEAR FRONT ELEVATION (B)

SCALE: NTS

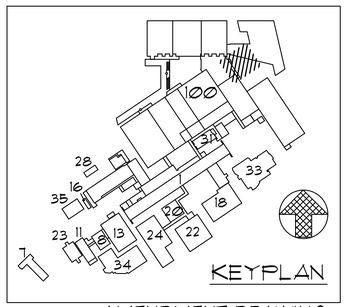

AMENDMENT DRAWING

SUPERSEDES 100-EP405T0

-	-
-	-
-	-
-	-
-	-
-	-
-	-
-	-
REVISION 1	04-01-16
Revisions:	Date

CONSULTANTS:

SAZAN GROUP
600 Stewart St., Ste 1400
Seattle, Washington 98101
Tel 206.267.1700
Fax 206.267.1701
SAZAN # 269-1507

Drawing Title: ENLARGED ELECTRICAL ROOM C PLAN - POWER TEMPORARY

Approved: Project Director
-
-
VAPAHCS PLANNING AND ENGINEERING

Project Title: VA PUGET SOUND HEALTH CARE SYSTEM UPGRADE SEATTLE ELECTRICAL DISTRIBUTION FROM 5kV TO 15kV

Location: 1660 South Columbian Way, Seattle, WA 98108

Date	Checked	Drawn
01-19-2016	A. WOOLF	S. LIM

Project Number: 663-15-102

Building Number: 100

Drawing Number: 100-EP405T0R

Dwg. -- of --

Office of Construction and Facilities Management

Department of Veterans Affairs

P:\269-1507 VAMC Seattle 5kV to 15kV Upgrade\DWG\ELEC\100-EP405T0.dwg 3-30-16 10:48:48 AM cpeters

VA FORM 08-6231

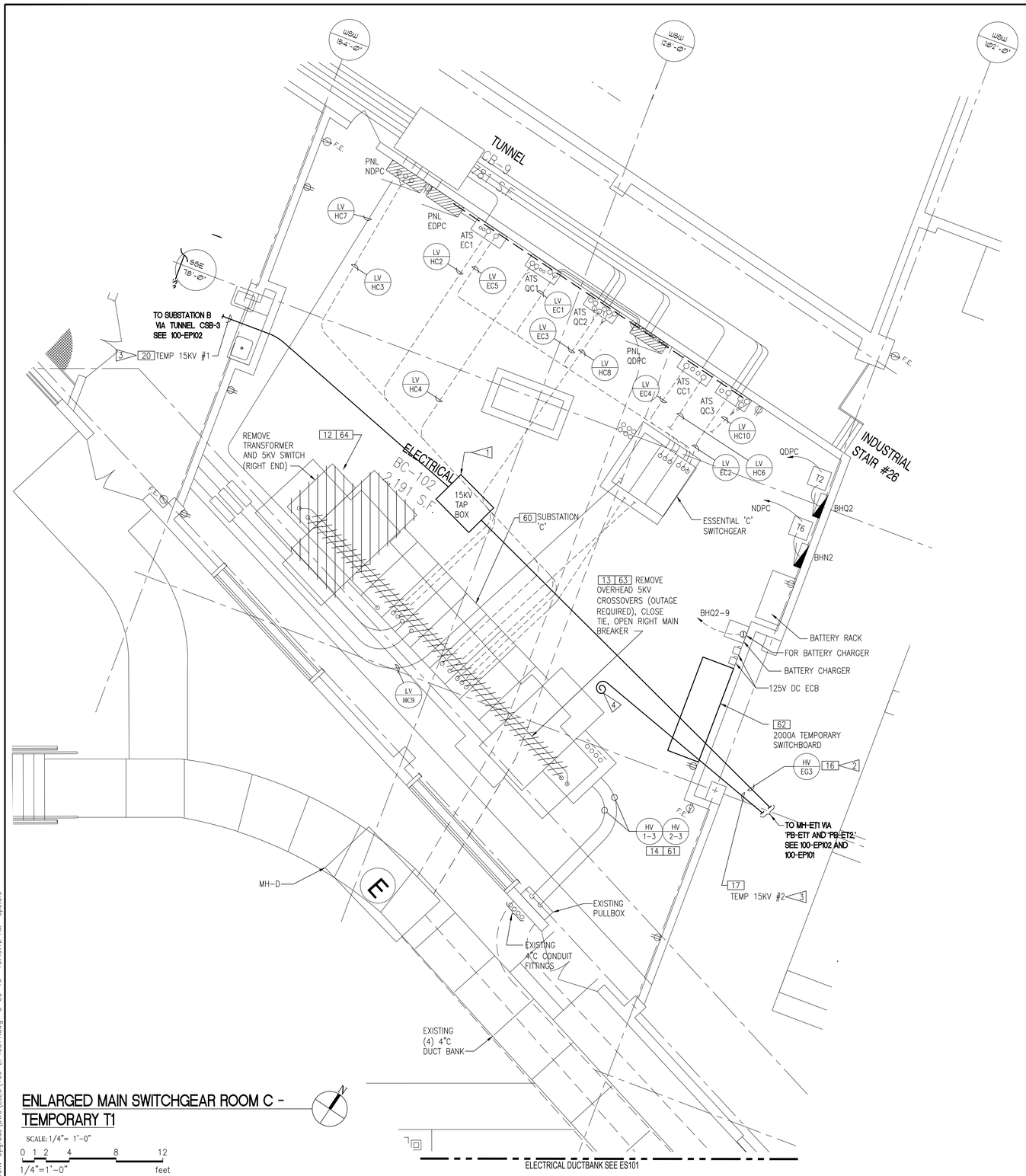

ENLARGED MAIN SWITCHGEAR ROOM C - TEMPORARY T1

SCALE: 1/4"= 1'-0"

0 1 2 4 8 12
1/4"=1'-0" feet

GENERAL NOTES:

1. 1. REFER TO ARCHITECTURAL, CIVIL, STRUCTURAL, AND MECHANICAL DRAWINGS FOR RELATED WORK NOT SHOWN ON THIS DRAWING.
2. FIELD VERIFY EXISTING CONDITIONS PRIOR TO COMMENCING WORK.
3. REFER TO ENLARGED ELECTRICAL ROOMS PLAN TEMPORARIES DRAWINGS FOR SEQUENCE OF CONSTRUCTIONS.
4. THE EXISTING SCL EAST CAMPUS SERVICE YARD SHALL BE ENLARGED TO IN STAGES TO ACCOMMODATE THE SERVICE UPGRADE FROM 5KV TO 15KV.
5. REFER TO ES800 AND ES801 FOR FEEDER SCHEDULE.
6. REFERENCE DRAWING 100-EP101 AND 100-EP102.

NOTES:

TASK IDENTIFICATION – SEE SEQUENCE OF CONSTRUCTION ON SHEETS ES003, ES004 AND ES005.

12 13 14 16 17 20
60 61 62 63 64

CONSTRUCTION NOTES:

1. PROVIDE 15KV TAP BOX.
2. PROVIDE FEEDER AS SHOWN.
3. TEMPORARY FEEDERS SHALL BE ARMORED CABLES, UNLESS OTHERWISE NOTED.
4. COIL TEMP FEEDER FOR FUTURE CONNECTION.

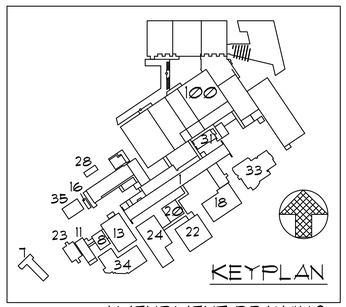

AMENDMENT DRAWING

SUPERSEDES 100-EP405T1

-	-
-	-
-	-
-	-
-	-
-	-
-	-
-	-
REVISION 1	04-01-16
Revisions:	Date

CONSULTANTS:

SAZAN GROUP
600 Stewart St., Ste 1400
Seattle, Washington 98101
Tel 206.267.1700
Fax 206.267.1701
SAZAN # 269-1507

Drawing Title: ENLARGED ELECTRICAL ROOM C PLAN - POWER TEMPORARY T1

Approved Project Director: - - VAPAHCS PLANNING AND ENGINEERING

Project Title: VA PUGET SOUND HEALTH CARE SYSTEM UPGRADE SEATTLE ELECTRICAL DISTRIBUTION FROM 5kV TO 15kV

Location: 1660 South Columbian Way, Seattle, WA 98108

Date: 02-25-2016 | Checked: A. WOOLF | Drawn: S. LIM

Project Number: 663-15-102

Building Number: 100

Drawing Number: 100-EP405T1R

Dwg. -- of --

Office of Construction and Facilities Management

Department of Veterans Affairs

VA FORM 08-6231

P:\269-1507 VAMC Seattle 5kV to 15kV Upgrade\DWG\ELEC\100-EP405T1.dwg 3-30-16 10:49:12 AM cpeters

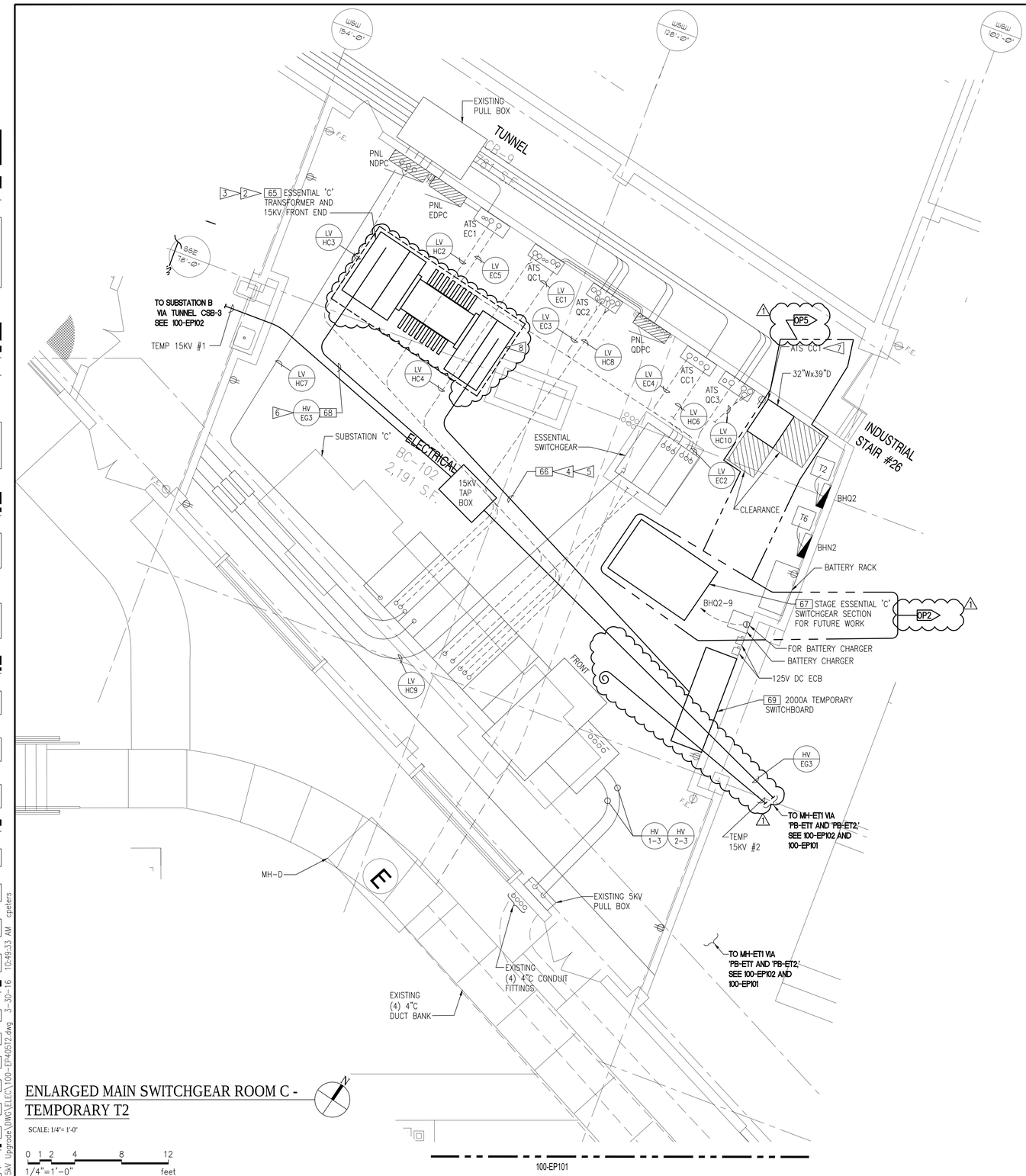

ENLARGED MAIN SWITCHGEAR ROOM C - TEMPORARY T2

SCALE: 1/4"= 1'-0"

0 1 2 4 8 12
1/4"=1'-0" feet

GENERAL NOTES:

1. 1. REFER TO ARCHITECTURAL, CIVIL, STRUCTURAL, AND MECHANICAL DRAWINGS FOR RELATED WORK NOT SHOWN ON THIS DRAWING.
2. FIELD VERIFY EXISTING CONDITIONS PRIOR TO COMMENCING WORK.
3. REFER TO ENLARGED ELECTRICAL ROOMS PLAN TEMPORARIES DRAWINGS FOR SEQUENCE OF CONSTRUCTIONS.
4. THE EXISTING SCL EAST CAMPUS SERVICE YARD SHALL BE ENLARGED TO IN STAGES TO ACCOMMODATE THE SERVICE UPGRADE FROM 5KV TO 15KV.
5. REFER TO ES800 AND ES801 FOR FEEDER SCHEDULE.

NOTES:

TASK IDENTIFICATION – SEE SEQUENCE OF CONSTRUCTION ON SHEETS ES003, ES004 AND ES005.

66 67 68 69

CONSTRUCTION NOTES:

1. PROVIDE 15KV ESSENTIAL SWITCHGEAR.
2. PROVIDE TRANSFORMER AS SHOWN.
3. COORDINATE HOUSE-KEEPING PAD WITH STRUCTURAL.
4. PROVIDE TEMPORARY FEEDERS.
5. TEMPORARY FEEDERS SHALL BE ARMORED CABLES, UNLESS OTHERWISE NOTED.
6. PROVIDE FEEDER AS SHOWN.
7. PROVIDE 400A/3-POLE, 480V AUTOMATIC TRANSFER SWITCH WITH BYPASS ISOLATION.
8. REVISED SWITCHGEAR POSITION AND FEEDER TERMINATION.

1 OP5

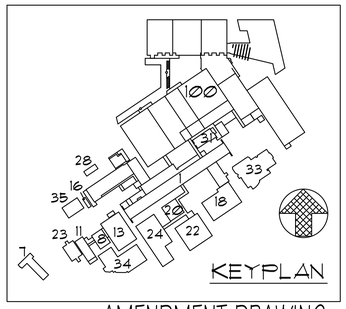

AMENDMENT DRAWING

SUPERSEDES 100-EP405T2

-	-
-	-
-	-
-	-
-	-
-	-
-	-
-	-
REVISION 1	04-01-16
Revisions:	Date

CONSULTANTS:

SÄZÄN GROUP
600 Stewart St., Ste 1400
Seattle, Washington 98101
Tel 206.267.1700
Fax 206.267.1701
SAZAN # 269-1507

Drawing Title: ENLARGED ELECTRICAL ROOM C PLAN - POWER TEMPORARY T2

Approved Project Director: - - VAPAHCS PLANNING AND ENGINEERING

Project Title: VA PUGET SOUND HEALTH CARE SYSTEM UPGRADE SEATTLE ELECTRICAL DISTRIBUTION FROM 5kV TO 15kV

Location: 1660 South Columbian Way, Seattle, WA 98108

Date: 02-25-2016 | Checked: A. WOOLF | Drawn: S. LIM

Project Number: 663-15-102

Building Number: 100

Drawing Number: 100-EP405T2R

Dwg. -- of --

Office of Construction and Facilities Management

Department of Veterans Affairs

VA FORM 08-6231

P:\269-1507 VAMC Seattle 5kV to 15kV Upgrade\DWG\ELEC\100-EP405T2.dwg 3-30-16 10:49:33 AM cpeters

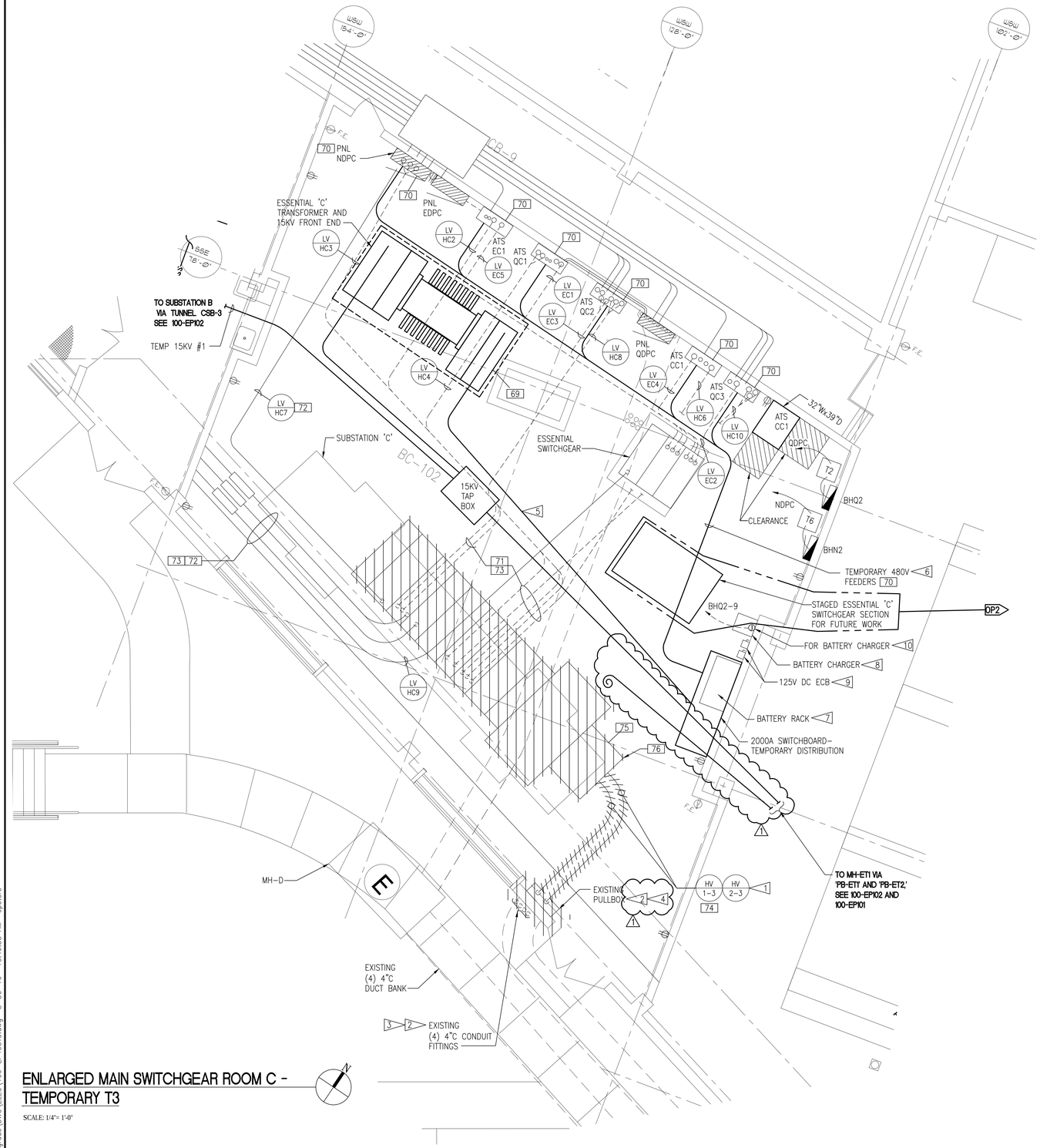

ENLARGED MAIN SWITCHGEAR ROOM C - TEMPORARY T3

SCALE: 1/4"= 1'-0"

0 1 2 4 8 12
1/4"=1'-0" feet

GENERAL NOTES:

1. 1. REFER TO ARCHITECTURAL, CIVIL, STRUCTURAL, AND MECHANICAL DRAWINGS FOR RELATED WORK NOT SHOWN ON THIS DRAWING.
2. FIELD VERIFY EXISTING CONDITIONS PRIOR TO COMMENCING WORK.
3. REFER TO ENLARGED ELECTRICAL ROOMS PLAN TEMPORARIES DRAWINGS FOR SEQUENCE OF CONSTRUCTIONS.
4. THE EXISTING SCL EAST CAMPUS SERVICE YARD SHALL BE ENLARGED TO IN STAGES TO ACCOMMODATE THE SERVICE UPGRADE FROM 5KV TO 15KV.
5. REFER TO ES800 AND ES801 FOR FEEDER SCHEDULE.

NOTES:

TASK IDENTIFICATION – SEE SEQUENCE OF CONSTRUCTION ON SHEET ES003, ES004 AND ES005.

69 70 71 72 73 74 75 76

CONSTRUCTION NOTES:

1. REMOVE CONDUITS AND CABLES.
2. REPLACE 5KV FEEDERS WITH 15KV FEEDERS.
3. REMOVE CONDUIT FITTINGS AND INTERCEPT CONDUITS AND EXTEND TO PULL BOX PB-CT1. REFER TO 100-EP405-T6 FOR PULL BOX REQUIREMENTS.
4. REPLACE EXISTING PULL BOX WITH NEW. REFER TO 100-EP405T6 FOR PULL BOX REQUIREMENTS.
5. PROVIDE MC CABLE (6) 1-4/C, 500KCMIL. PROVIDE EQUIPMENT GROUNDING PER NEC 330.108. PROVIDE SUPPORT AS REQUIRED.
6. PROVIDE MC CABLE EQUIVALENT TO FEEDER SCHEDULE FOR DISTRIBUTION EQUIPMENT CONNECTION.
7. REMOVE BATTERY RACK.
8. REMOVE BATTERY CHARGER. MAINTAIN EXISTING EQUIPMENT RACK FOR RE-USE.
9. EXISTING ENCLOSE CIRCUIT BREAKER TO RE-USED.
10. MAINTAIN EXISTING CIRCUIT FOR BATTERY CHARGER FOR RE-USE. SEE DWG 100-EP405T4 FOR ADDITIONAL WORK.

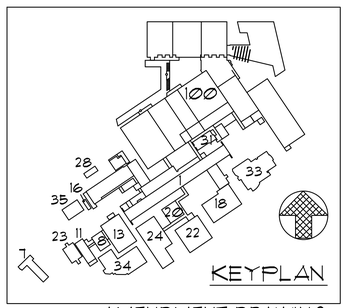

AMENDMENT DRAWING

SUPERSEDES 100-EP405T3

-	-
-	-
-	-
-	-
-	-
-	-
-	-
-	-
REVISION 1	04-01-16
Revisions:	Date

CONSULTANTS:

SÄZÄN GROUP
600 Stewart St., Ste 1400
Seattle, Washington 98101
Tel 206.267.1700
Fax 206.267.1701
SAZAN # 269-1507

Drawing Title: ENLARGED ELECTRICAL ROOM C PLAN - POWER TEMPORARY T3

Approved: Project Director
-
-
VAPAHCS PLANNING AND ENGINEERING

Project Title: VA PUGET SOUND HEALTH CARE SYSTEM UPGRADE SEATTLE ELECTRICAL DISTRIBUTION FROM 5kV TO 15kV

Location: 1660 South Columbian Way, Seattle, WA 98108

Date	Checked	Drawn
02-25-2016	A. WOOLF	S. LIM

Project Number: 663-15-102

Building Number: 100

Drawing Number: 100-EP405T3R

Dwg. -- of --

Office of Construction and Facilities Management

Department of Veterans Affairs

VA FORM 08-6231

P:\269-1507 VAMC Seattle 5kV to 15kV Upgrade\DWG\ELEC\100-EP405T3.dwg 3-30-16 10:49:58 AM cpeters

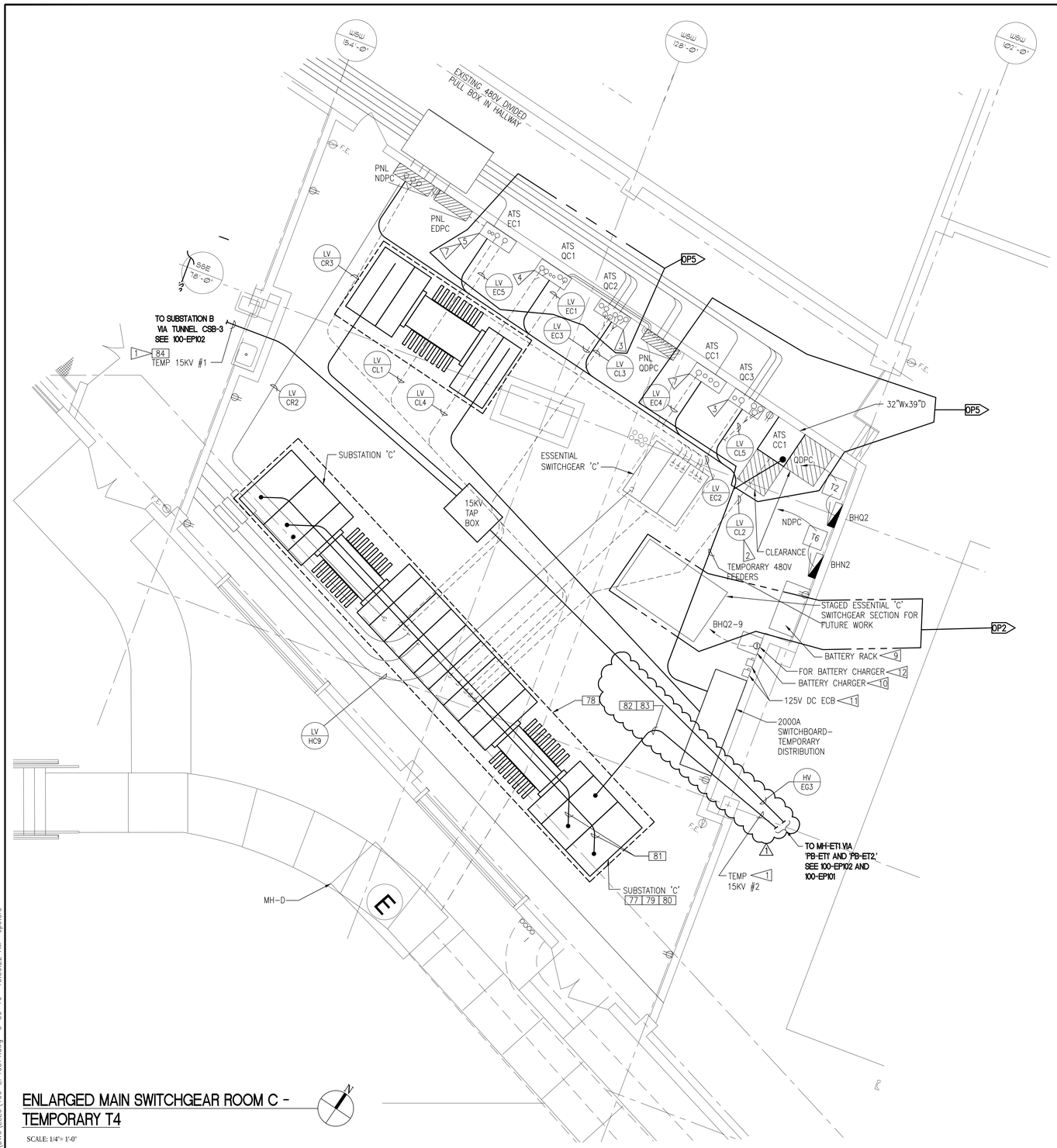

ENLARGED MAIN SWITCHGEAR ROOM C - TEMPORARY T4

SCALE: 1/4"= 1'-0"

0 1 2 4 8 12
1/4"=1'-0" feet

GENERAL NOTES:

1. 1. REFER TO ARCHITECTURAL, CIVIL, STRUCTURAL, AND MECHANICAL DRAWINGS FOR RELATED WORK NOT SHOWN ON THIS DRAWING.
2. FIELD VERIFY EXISTING CONDITIONS PRIOR TO COMMENCING WORK.
3. REFER TO ENLARGED ELECTRICAL ROOMS PLAN TEMPORARIES DRAWINGS FOR SEQUENCE OF CONSTRUCTIONS.
4. THE EXISTING SCL EAST CAMPUS SERVICE YARD SHALL BE ENLARGED TO IN STAGES TO ACCOMMODATE THE SERVICE UPGRADE FROM 5KV TO 15KV.
5. REFER TO ES800 AND ES801 FOR FEEDER SCHEDULE.

NOTES:

TASK IDENTIFICATION – SEE SEQUENCE OF CONSTRUCTION ON SHEET ES003, ES004 AND ES005.

77 78 79 80 81 82 83 84

CONSTRUCTION NOTES:

1 OP5

1. PROVIDE ARMORED CABLE EQUIVALENT TO HV EG3.
2. PROVIDE FEEDER AS SHOWN.
3. REPLACE 800A, 3-POLE, 480V AUTOMATIC TRANSFER SWITCH INTERIOR ASSEMBLY IN EXISTING CAN. PROVIDE CONTINUOUS LOCKABLE TYPE PIANO HINGE DOOR. COORDINATE SHUTDOWN WITH VA PRIOR TO REPLACING ATS. NEW ATS SHALL BE OPERATIONAL PER EXISTING CONDITIONS UPON PROJECT COMPLETION.
4. REPLACE 400A, 3-POLE, 480V AUTOMATIC TRANSFER SWITCH INTERIOR ASSEMBLY IN EXISTING CAN. PROVIDE CONTINUOUS LOCKABLE TYPE PIANO HINGE DOOR. COORDINATE SHUTDOWN WITH VA PRIOR TO REPLACING ATS. NEW ATS SHALL BE OPERATIONAL PER EXISTING CONDITIONS UPON PROJECT COMPLETION.
5. REPLACE EXISTING ATS WITH 400A, 4-POLE, 480Y/277V TRANSFER SWITCH WITH BYPASS ISOLATION. COORDINATE SHUTDOWN WITH VA PRIOR TO REPLACING ATS. NEW ATS SHALL BE OPERATIONAL PER EXISTING CONDITIONS UPON PROJECT COMPLETION.
6. NOT USED
7. MAINTAIN ATS CC1 FOR TEMPORARY CONNECTION TO ATS EC1 DOWNSTREAM PANEL SHALL BE OPERATIONAL DURING ATS EC1 REPLACEMENT.
8. NOT USED.
9. COORDINATE SPACE REQUIREMENTS WITH SWITCHGEAR PROVIDER.
10. PROVIDE BATTERY CHARGER. INSTALL IN EXISTING EQUIPMENT RACK. PROVIDE CONNECTIONS TO BATTERIES.
11. CONNECT EXISTING ENCLOSED CIRCUIT BREAKER TO NEW BATTERY RACK.
12. CONNECT EXISTING CIRCUIT AND EXTEND TO NEW CHARGER.

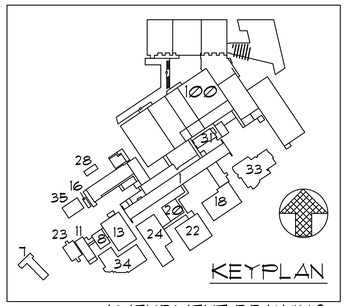

AMENDMENT DRAWING

SUPERSEDES 100-EP405T4

-	-
-	-
-	-
-	-
-	-
-	-
-	-
-	-
REVISION 1	04-01-16
Revisions:	Date

CONSULTANTS:

SAZAN GROUP
600 Stewart St., Ste 1400
Seattle, Washington 98101
Tel 206.267.1700
Fax 206.267.1701
SAZAN # 269-1507

Drawing Title: ENLARGED ELECTRICAL ROOM C PLAN - POWER TEMPORARY T4

Approved: Project Director
-
-
VAPAHCS PLANNING AND ENGINEERING

Project Title: VA PUGET SOUND HEALTH CARE SYSTEM UPGRADE SEATTLE ELECTRICAL DISTRIBUTION FROM 5kV TO 15kV

Location: 1660 South Columbian Way, Seattle, WA 98108

Date: 02-25-2016 | Checked: A. WOOLF | Drawn: S. LIM

Project Number: 663-15-102

Building Number: 100

Drawing Number: 100-EP405T4R

Dwg -- of --

Office of Construction and Facilities Management

Department of Veterans Affairs

VA FORM 08-6231

P:\269-1507 VAMC Seattle 5kV to 15kV Upgrade\DWG\ELEC\100-EP405T4.dwg 3-30-16 10:50:22 AM cpeters

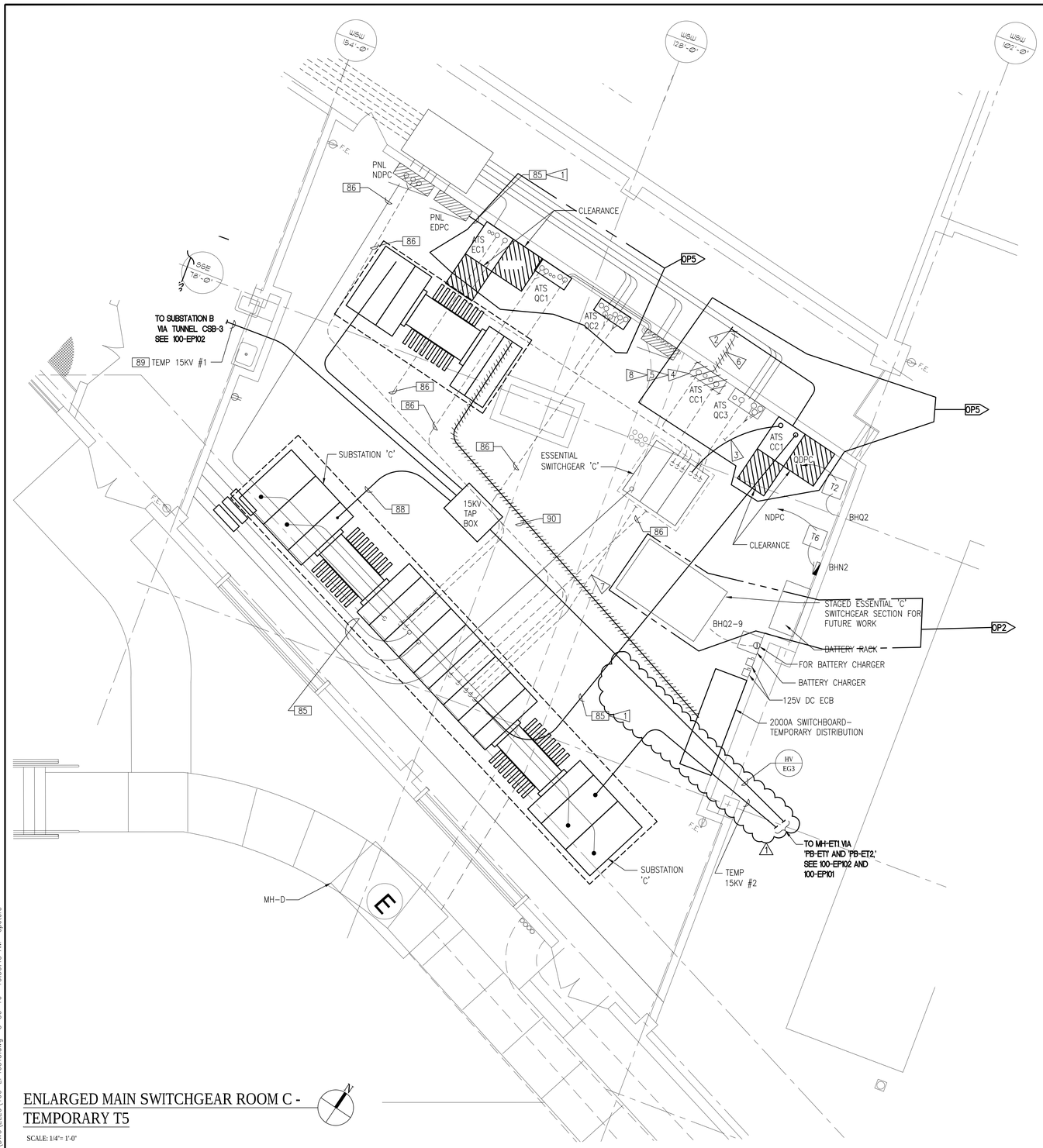

GENERAL NOTES:

1. 1. REFER TO ARCHITECTURAL, CIVIL, STRUCTURAL, AND MECHANICAL DRAWINGS FOR RELATED WORK NOT SHOWN ON THIS DRAWING.
2. FIELD VERIFY EXISTING CONDITIONS PRIOR TO COMMENCING WORK.
3. REFER TO ENLARGED ELECTRICAL ROOMS PLAN TEMPORARIES DRAWINGS FOR SEQUENCE OF CONSTRUCTIONS.
4. THE EXISTING SCL EAST CAMPUS SERVICE YARD SHALL BE ENLARGED TO IN STAGES TO ACCOMMODATE THE SERVICE UPGRADE FROM 5KV TO 15KV.
5. REFER TO ES800 AND ES801 FOR FEEDER SCHEDULE.

NOTES:

TASK IDENTIFICATION – SEE SEQUENCE OF CONSTRUCTION ON SHEET ES003, ES004 AND ES005.

85 86 88 89 90

CONSTRUCTION NOTES:

1. PROVIDE 480V FEEDERS, AS SHOWN.
2. INTERCEPT EXISTING FEEDER AND EXTEND TO NEW ATS LOCATION.
3. PROVIDE TEMPORARY FEEDER TO ATS AS SHOWN.
4. INTERCEPT EXISTING CONTROL WIRES AND EXTEND TO NEW ATS LOCATION.
5. DISCONNECT AND REMOVE EXISTING ATS. REMOVE UN-USED CONDUIT FLUSH TO FLOOR AND CAP.
6. REMOVE AS SHOWN.
7. REMOVE CONDUCTORS AND ABANDON CONDUITS.

ENLARGED MAIN SWITCHGEAR ROOM C - TEMPORARY T5

SCALE: 1/4"= 1'-0"

0 1 2 4 8 12
1/4"=1'-0" feet

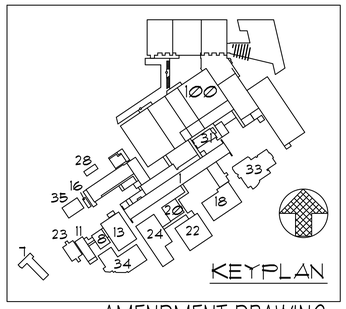

AMENDMENT DRAWING

SUPERSEDES 100-EP405T5

-	-
-	-
-	-
-	-
-	-
-	-
-	-
-	-
REVISION 1	04-01-16
Revisions:	Date

CONSULTANTS:

SAZAN GROUP
600 Stewart St., Ste 1400
Seattle, Washington 98101
Tel 206.267.1700
Fax 206.267.1701
SAZAN # 269-1507

Drawing Title: ENLARGED ELECTRICAL ROOM C PLAN - POWER TEMPORARY T5

Approved: Project Director
-
-
VAPAHCS PLANNING AND ENGINEERING

Project Title: VA PUGET SOUND HEALTH CARE SYSTEM UPGRADE SEATTLE ELECTRICAL DISTRIBUTION FROM 5kV TO 15kV

Location: 1660 South Columbian Way, Seattle, WA 98108

Date	Checked	Drawn
02-25-2016	A. WOOLF	S. LIM

Project Number: 663-15-102

Building Number: 100

Drawing Number: 100-EP405T5R

Dwg -- of --

Office of Construction and Facilities Management

Department of Veterans Affairs

VA FORM 08-6231

P:\269-1507 VAMC Seattle 5kV to 15kV Upgrade\DWG\ELEC\100-EP405T5.dwg 3-30-16 10:50:43 AM cpeters

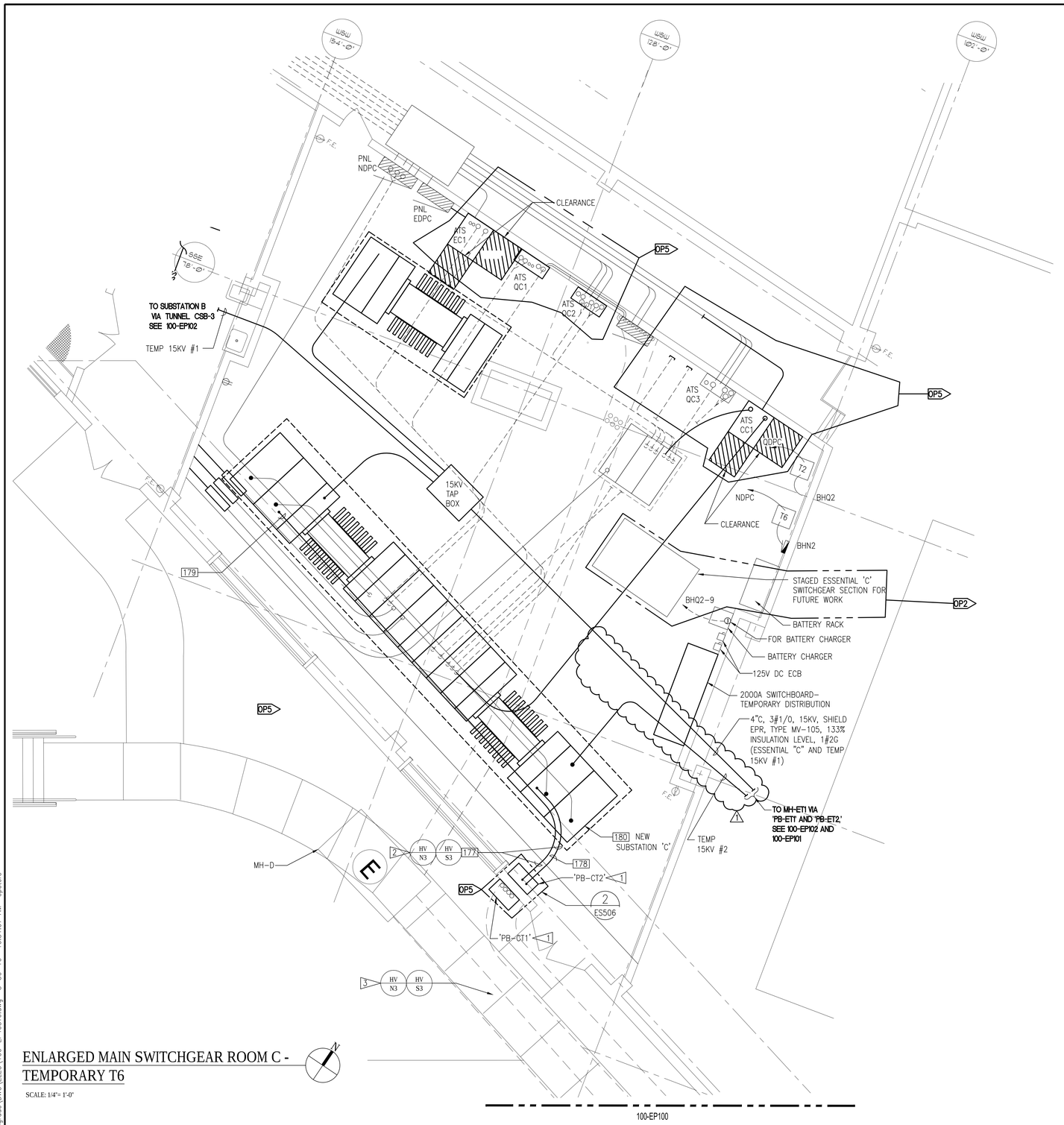

ENLARGED MAIN SWITCHGEAR ROOM C - TEMPORARY T6

SCALE: 1/4"= 1'-0"

0 1 2 4 8 12
1/4"=1'-0" feet

GENERAL NOTES:

1. REFER TO ARCHITECTURAL, CIVIL, STRUCTURAL, AND MECHANICAL DRAWINGS FOR RELATED WORK NOT SHOWN ON THIS DRAWING.
2. FIELD VERIFY EXISTING CONDITIONS PRIOR TO COMMENCING WORK.
3. REFER TO ENLARGED ELECTRICAL ROOMS PLAN TEMPORARIES DRAWINGS FOR SEQUENCE OF CONSTRUCTIONS.
4. THE EXISTING SCL EAST CAMPUS SERVICE YARD SHALL BE ENLARGED TO IN STAGES TO ACCOMMODATE THE SERVICE UPGRADE FROM 5KV TO 15KV.
5. REFER TO ES800 AND ES801 FOR FEEDER SCHEDULE.
6. REFER TO ES003, ES004, ES005 AND 100-EP405T1 THROUGH 100-ED405T6 FOR SEQUENCE OF CONSTRUCTION FOR DISCONNECTING, REMOVAL AND INSTALLATION OF EQUIPMENT.

NOTES:

TASK IDENTIFICATION – SEE SEQUENCE OF CONSTRUCTION ON SHEET ES003, ES004 AND ES005.

85 177 178 179 180

CONSTRUCTION NOTES:

1. PROVIDE STAINLESS STEEL PULL BOX WITH CONTINUOUS HINGE AND LOCKABLE DOOR. SEE 2/ES506 FOR MOUNTING DETAIL. REFER TO 100-EP405T3 FOR ADDITIONAL REQUIREMENTS.
2. PROVIDE CONDUIT AND CABLES.
3. PROVIDE CABLES IN EXISTING DUCTS.

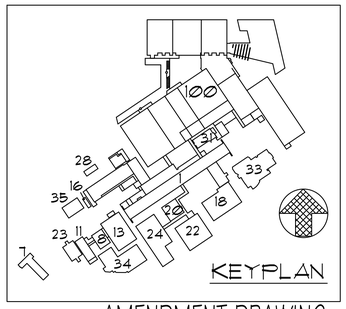

AMENDMENT DRAWING

SUPERSEDES 100-EP405T6

-	-
-	-
-	-
-	-
-	-
-	-
-	-
-	-
REVISION 1	04-01-16
Revisions:	Date

CONSULTANTS:

SAZAN GROUP
600 Stewart St., Ste 1400
Seattle, Washington 98101
Tel 206.267.1700
Fax 206.267.1701
SAZAN # 269-1507

Drawing Title: ENLARGED ELECTRICAL ROOM C PLAN - POWER TEMPORARY T6

Approved: Project Director
-
-
VAPAHCS PLANNING AND ENGINEERING

Project Title: VA PUGET SOUND HEALTH CARE SYSTEM UPGRADE SEATTLE ELECTRICAL DISTRIBUTION FROM 5kV TO 15kV

Location: 1660 South Columbian Way, Seattle, WA 98108

Date: 02-25-2016 | Checked: A. WOOLF | Drawn: S. LIM

Project Number: 663-15-102

Building Number: 100

Drawing Number: 100-EP405T6R

Dwg -- of --

Office of Construction and Facilities Management

Department of Veterans Affairs

VA FORM 08-6231

P:\269-1507 VAMC Seattle 5kV to 15kV Upgrade\DWG\ELEC\100-EP405T6.dwg 3-30-16 10:51:07 AM cpeters

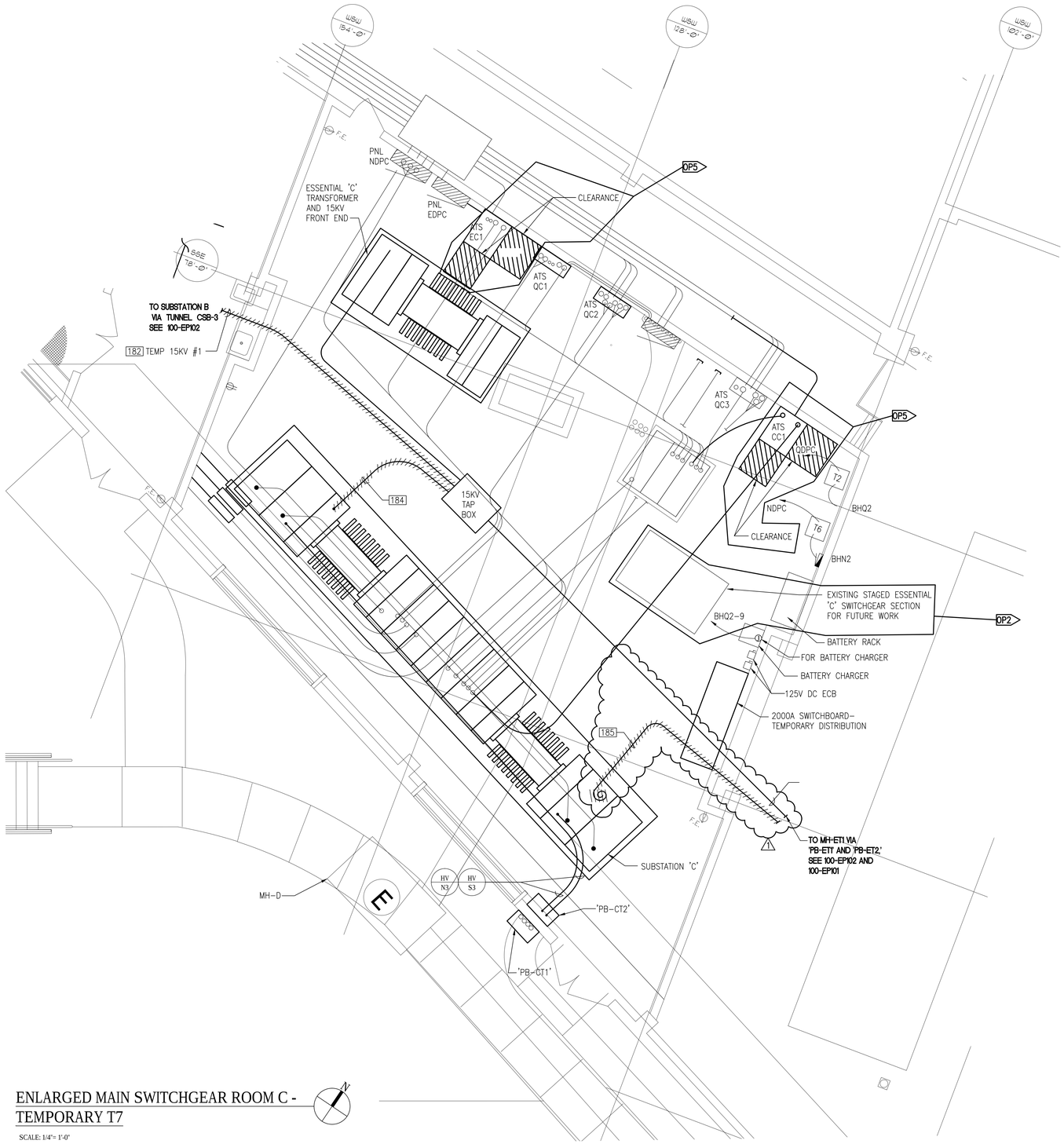

GENERAL NOTES:

1. REFER TO ARCHITECTURAL, CIVIL, STRUCTURAL, AND MECHANICAL DRAWINGS FOR RELATED WORK NOT SHOWN ON THIS DRAWING.
2. FIELD VERIFY EXISTING CONDITIONS PRIOR TO COMMENCING WORK.
3. REFER TO ENLARGED ELECTRICAL ROOMS PLAN TEMPORARIES DRAWINGS FOR SEQUENCE OF CONSTRUCTIONS.
4. THE EXISTING SCL EAST CAMPUS SERVICE YARD SHALL BE ENLARGED TO IN STAGES TO ACCOMMODATE THE SERVICE UPGRADE FROM 5KV TO 15KV.
5. REFER TO ES800 AND ES801 FOR FEEDER SCHEDULE.

1

NOTES:

TASK IDENTIFICATION – SEE SEQUENCE OF CONSTRUCTION ON SHEET ES003, ES004 AND ES005.

85 86 87 90 182 184 185

CONSTRUCTION NOTES:

1

ENLARGED MAIN SWITCHGEAR ROOM C - TEMPORARY T7

SCALE: 1/4"= 1'-0"

0 1 2 4 8 12
1/4"=1'-0" feet

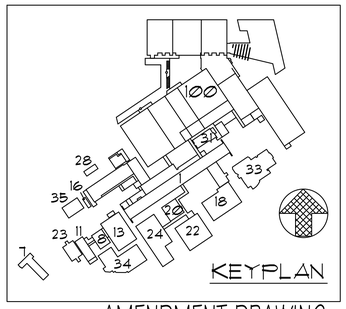

AMENDMENT DRAWING

SUPERSEDES 100-EP405T7

-	-
-	-
-	-
-	-
-	-
-	-
-	-
-	-
REVISION 1	04-01-16
Revisions:	Date

CONSULTANTS:

SAZAN GROUP
600 Stewart St., Ste 1400
Seattle, Washington 98101
Tel 206.267.1700
Fax 206.267.1701
SAZAN # 269-1507

Drawing Title: ENLARGED ELECTRICAL ROOM C PLAN - POWER TEMPORARY T7

Approved Project Director: - - VAPAHCS PLANNING AND ENGINEERING

Project Title: VA PUGET SOUND HEALTH CARE SYSTEM UPGRADE SEATTLE ELECTRICAL DISTRIBUTION FROM 5kV TO 15kV

Location: 1660 South Columbian Way, Seattle, WA 98108

Date: 02-25-2016 | Checked: A. WOOLF | Drawn: S. LIM

Project Number: 663-15-102

Building Number: 100

Drawing Number: 100-EP405T7R

Dwg. -- of --

Office of Construction and Facilities Management

Department of Veterans Affairs

VA FORM 08-6231

P:\269-1507 VAMC Seattle 5kV to 15kV Upgrade\DWG\ELEC\100-EP405T7.dwg 3-30-16 10:51:31 AM cpeters

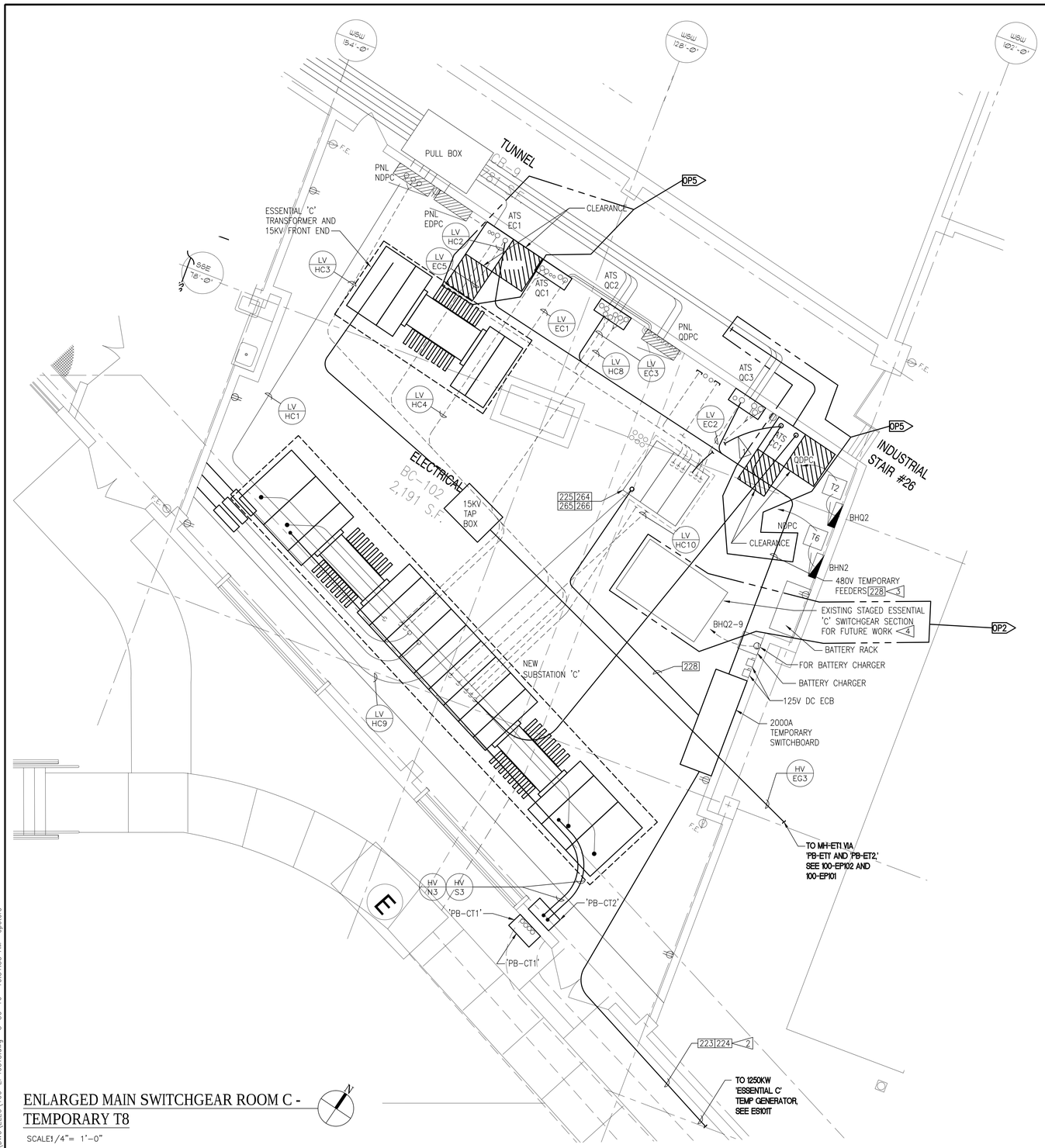

ENLARGED MAIN SWITCHGEAR ROOM C - TEMPORARY T8

SCALE1/4"= 1'-0"

0 1 2 4 8 12
1/4"=1'-0" feet

GENERAL NOTES:

1. REFER TO ARCHITECTURAL, CIVIL, STRUCTURAL, AND MECHANICAL DRAWINGS FOR RELATED WORK NOT SHOWN ON THIS DRAWING.
2. FIELD VERIFY EXISTING CONDITIONS PRIOR TO COMMENCING WORK.
3. REFER TO ENLARGED ELECTRICAL ROOMS PLAN TEMPORARIES DRAWINGS FOR SEQUENCE OF CONSTRUCTIONS.
4. THE EXISTING SCL EAST CAMPUS SERVICE YARD SHALL BE ENLARGED TO IN STAGES TO ACCOMMODATE THE SERVICE UPGRADE FROM 5KV TO 15KV.
5. REFER TO ES800 AND ES801 FOR FEEDER SCHEDULE.

1

NOTES:

TASK IDENTIFICATION – SEE SEQUENCE OF CONSTRUCTION ON SHEET ES003, ES004 AND ES005.

223 224 225 228 229 230 264 265 266

1

CONSTRUCTION NOTES:

1. PROVIDE TEMPORARY FEEDER. TEMPORARY FEEDER SHALL HAVE MINIMUM OF 2000A CAPACITY, AND RATED FOR OUTDOOR USAGE.
2. INTERCEPT FEEDER ATS CONTROL CIRCUIT AND EXTEND TO TEMP SWITCHBOARD.
3. PROVIDE TEMPORARY FEEDER EQUIVALENT TO EXISTING FEEDER.
4. REPLACE EXISTING ESSENTIAL SWITCHGEAR 'C' WITH STAGED LOW VOLTAGE SECTION.

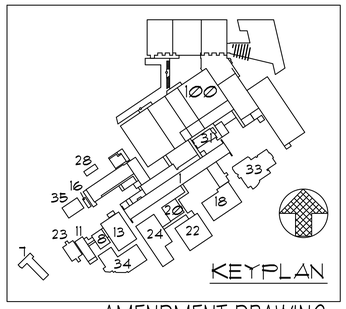

AMENDMENT DRAWING

SUPERSEDES 100-EP405T8

-	-
-	-
-	-
-	-
-	-
-	-
-	-
-	-
REVISION 1	04-01-16
Revisions:	Date

CONSULTANTS:

SÄZÄN GROUP
600 Stewart St., Ste 1400
Seattle, Washington 98101
Tel 206.267.1700
Fax 206.267.1701
SAZAN # 269-1507

Drawing Title: ENLARGED ELECTRICAL ROOM C PLAN - POWER TEMPORARY T8

Approved: Project Director
-
-
VAPAHCS PLANNING AND ENGINEERING

Project Title: VA PUGET SOUND HEALTH CARE SYSTEM UPGRADE SEATTLE ELECTRICAL DISTRIBUTION FROM 5kV TO 15kV

Location: 1660 South Columbian Way, Seattle, WA 98108

Date: 02-25-2016 | Checked: A. WOOLF | Drawn: S. LIM

Project Number: 663-15-102

Building Number: 100

Drawing Number: 100-EP405T8R

Dwg -- of --

Office of Construction and Facilities Management

Department of Veterans Affairs

VA FORM 08-6231

P:\269-1507 VAMC Seattle 5kV to 15kV Upgrade\DWG\ELEC\100-EP405T8.dwg 3-30-16 10:51:55 AM cpeters

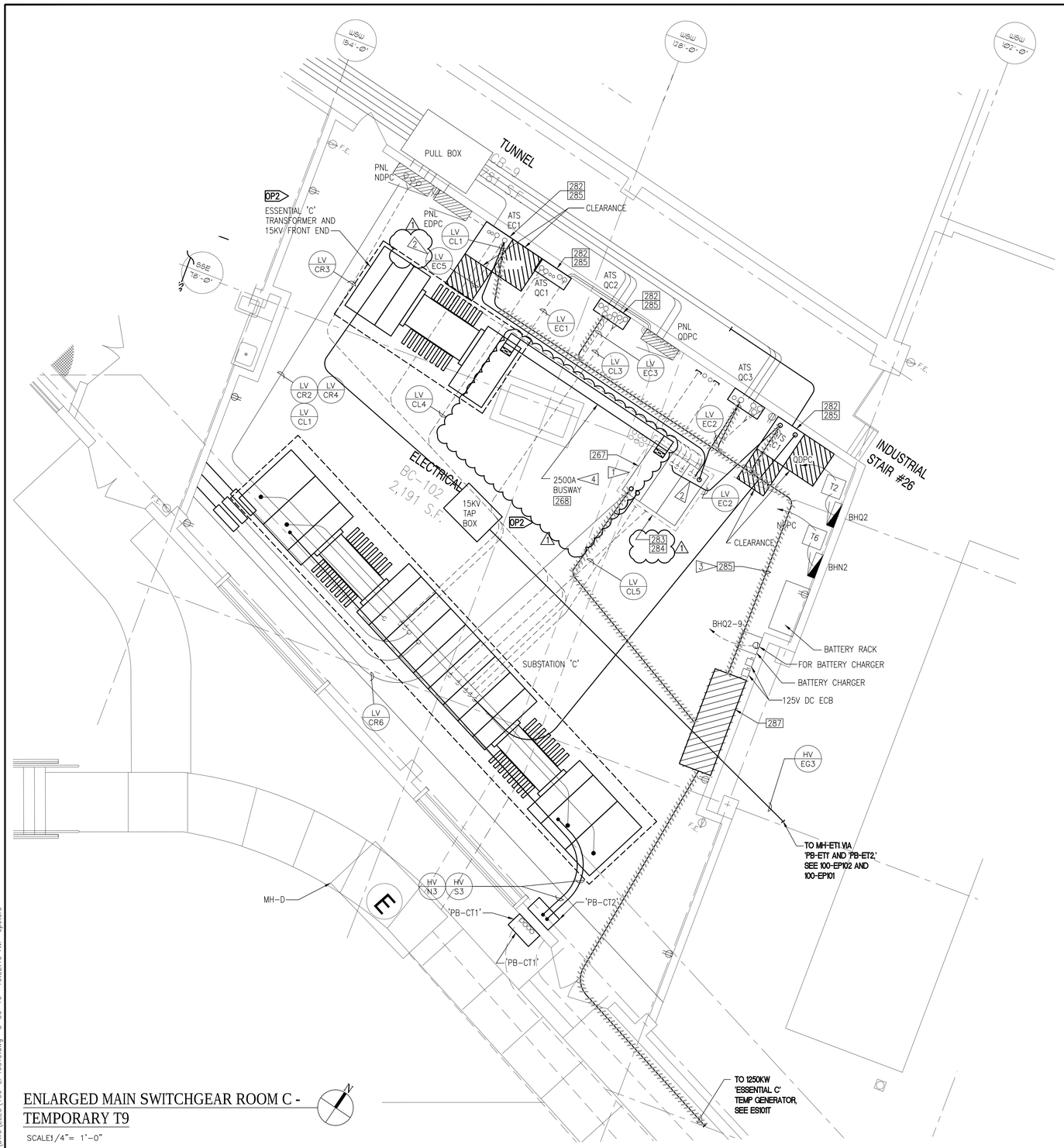

ENLARGED MAIN SWITCHGEAR ROOM C - TEMPORARY T9

SCALE1/4"= 1'-0"

0 1 2 4 8 12
1/4"=1'-0" feet

GENERAL NOTES:

1. REFER TO ARCHITECTURAL, CIVIL, STRUCTURAL, AND MECHANICAL DRAWINGS FOR RELATED WORK NOT SHOWN ON THIS DRAWING.
2. FIELD VERIFY EXISTING CONDITIONS PRIOR TO COMMENCING WORK.
3. REFER TO ENLARGED ELECTRICAL ROOMS PLAN TEMPORARIES DRAWINGS FOR SEQUENCE OF CONSTRUCTIONS.
4. THE EXISTING SCL EAST CAMPUS SERVICE YARD SHALL BE ENLARGED TO IN STAGES TO ACCOMMODATE THE SERVICE UPGRADE FROM 5KV TO 15KV.
5. REFER TO ES800 AND ES801 FOR FEEDER SCHEDULE.

1

NOTES:

TASK IDENTIFICATION – SEE SEQUENCE OF CONSTRUCTION ON SHEET ES003, ES004 AND ES005.

1 228 267 268 282 283 284 285 287

CONSTRUCTION NOTES:

1. COORDINATE HOUSE-KEPING WITH STRUCTURAL.
2. PROVIDE FEEDER AS SHOWN.
3. REMOVE TEMPORARY FEEDERS TO TRANSFER SWITCHES.
4. CONNECT SWITCHGEAR TO TRANSFORMER SECONDARY TERMINALS USING 2500A COPPER BUSWAY. BUSWAY SHALL BE INDOOR FEEDER CONFIGURATION, 3P/4W 100% NEUTRAL WITH 50% INTERNAL GROUND BUS.

1 PROVIDE FIELD FABRICATED SUPPORT AS REQUIRED.

1

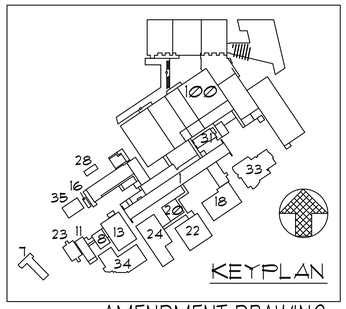

AMENDMENT DRAWING

SUPERSEDES 100-EP405T9

REVISIONS:	Date
REVISION 1	04-01-16
-	-
-	-
-	-
-	-
-	-
-	-
-	-
-	-

CONSULTANTS:

SÄZÄN GROUP
600 Stewart St., Ste 1400
Seattle, Washington 98101
Tel 206.267.1700
Fax 206.267.1701
SAZAN # 269-1507

Drawing Title: ENLARGED ELECTRICAL ROOM C PLAN - POWER TEMPORARY T9

Approved: Project Director
-
-
VAPAHCS PLANNING AND ENGINEERING

Project Title: VA PUGET SOUND HEALTH CARE SYSTEM UPGRADE SEATTLE ELECTRICAL DISTRIBUTION FROM 5kV TO 15kV

Location: 1660 South Columbian Way, Seattle, WA 98108

Date: 02-25-2016 | Checked: A. WOOLF | Drawn: S. LIM

Project Number: 663-15-102

Building Number: 100

Drawing Number: 100-EP405T9R

Dwg -- of --

Office of Construction and Facilities Management

Department of Veterans Affairs

VA FORM 08-6231

P:\269-1507 VAMC Seattle 5kV to 15kV Upgrade\DWG\ELEC\100-EP405T9.dwg 3-30-16 10:52:19 AM cpeters

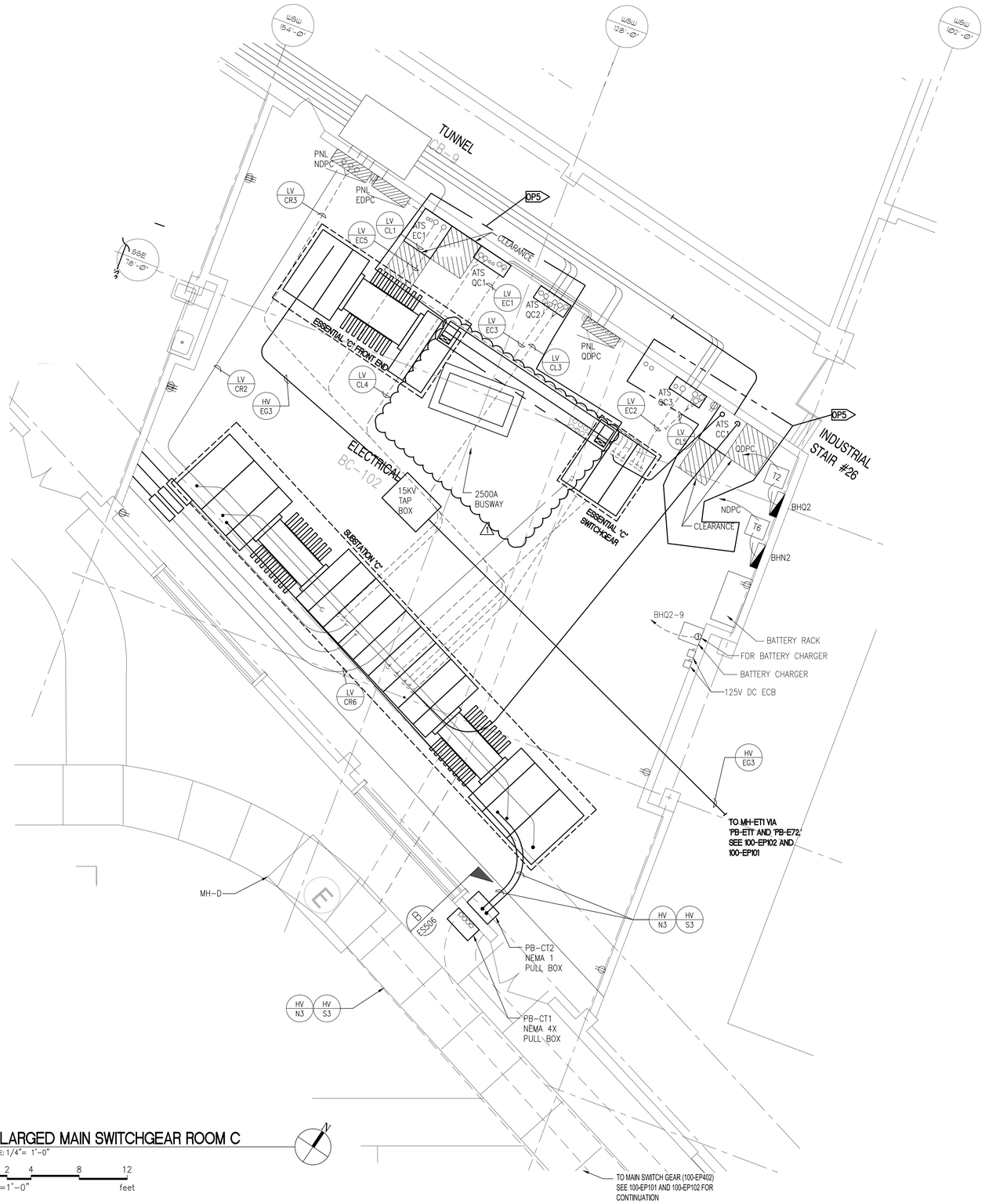

ENLARGED MAIN SWITCHGEAR ROOM C

SCALE: 1/4"= 1'-0"

0 1 2 4 8 12
1/4"=1'-0" feet

GENERAL NOTES:

1. REFER TO ARCHITECTURAL, CIVIL, STRUCTURAL, AND MECHANICAL DRAWINGS FOR RELATED WORK NOT SHOWN ON THIS DRAWING.
2. FIELD VERIFY EXISTING CONDITIONS PRIOR TO COMMENCING WORK.
3. REFER TO ENLARGED ELECTRICAL ROOMS PLAN TEMPORARIES DRAWINGS FOR SEQUENCE OF CONSTRUCTIONS.
4. THE EXISTING SCL EAST CAMPUS SERVICE YARD SHALL BE ENLARGED TO IN STAGES TO ACCOMMODATE THE SERVICE UPGRADE FROM 5KV TO 15KV.
5. REFER TO ES800 AND ES801 FOR FEEDER SCHEDULE.

1

NOTES:

TASK IDENTIFICATION – SEE SEQUENCE OF CONSTRUCTION ON SHEET ES003, ES004 AND ES005.

CONSTRUCTION NOTES:

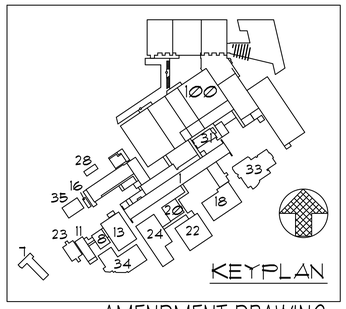

AMENDMENT DRAWING

SUPERSEDES 100-EP405

-	-
-	-
-	-
-	-
-	-
-	-
-	-
-	-
REVISION 1	04-01-16
Revisions:	Date

CONSULTANTS:

SAZAN GROUP
600 Stewart St., Ste 1400
Seattle, Washington 98101
Tel 206.267.1700
Fax 206.267.1701
SAZAN # 269-1507

Drawing Title: ENLARGED ELECTRICAL ROOM C PLAN - POWER

Approved: Project Director
-
-
VAPAHCS PLANNING AND ENGINEERING

Project Title: VA PUGET SOUND HEALTH CARE SYSTEM UPGRADE SEATTLE ELECTRICAL DISTRIBUTION FROM 5kV TO 15kV

Location: 1660 South Columbian Way, Seattle, WA 98108

Date: 02-25-2016 | Checked: A. WOOLF | Drawn: S. LIM

Project Number: 663-15-102

Building Number: 100

Drawing Number: 100-EP405R

Dwg -- of --

Office of Construction and Facilities Management

Department of Veterans Affairs

VA FORM 08-6231

P:\269-1507 VAMC Seattle 5kV to 15kV Upgrade\DWG\ELEC\100-EP405.dwg 3-30-16 10:52:43 AM cpeters

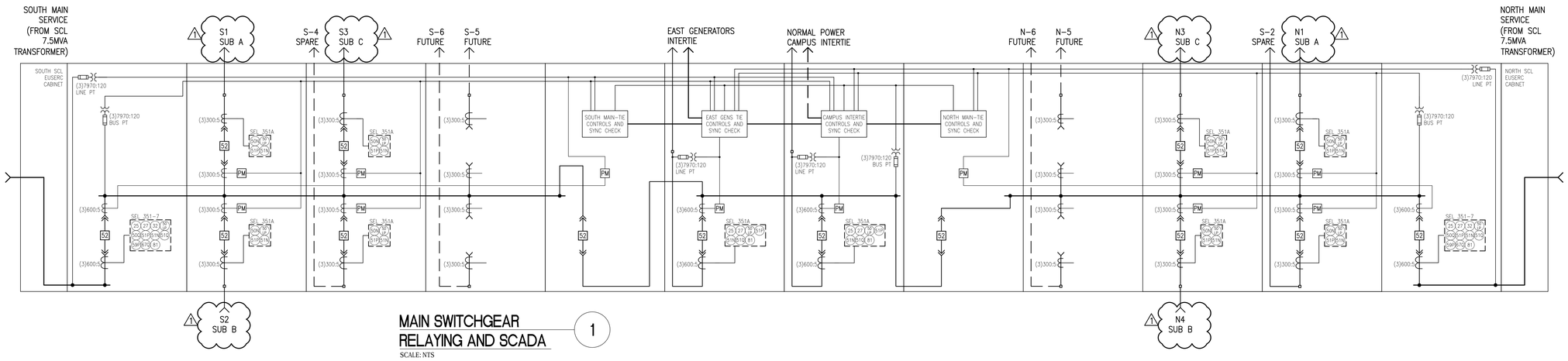

MAIN SWITCHGEAR RELAYING AND SCADA — 1

SCALE: NTS

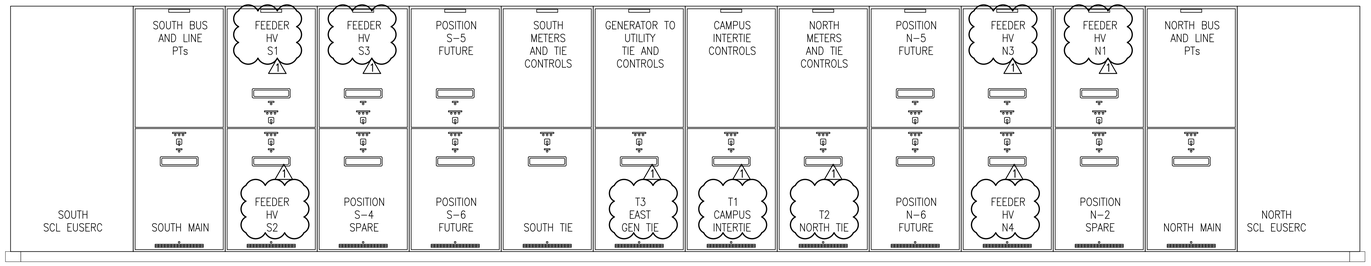

MAIN SWITCHGEAR ELEVATION — 2

SCALE: 1/2" = 1'-0"

0 6" 1 2 4 6
1/2"=1'-0" feet

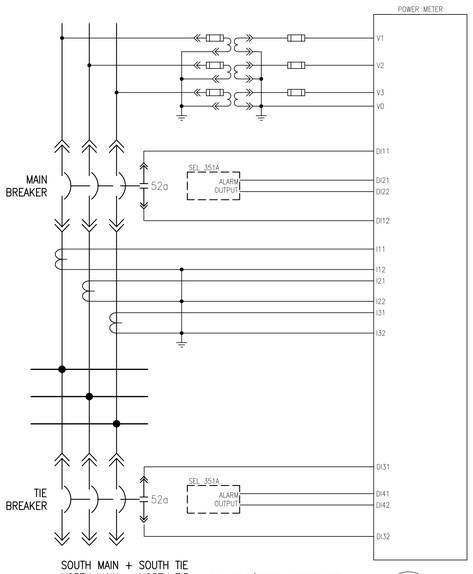

MAIN/TIE METER SCHEMATIC — 4

SCALE: NTS

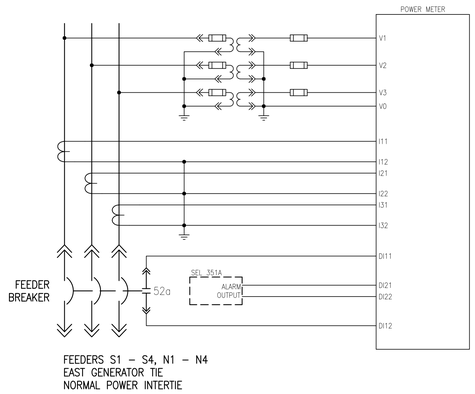

FEEDER METER SCHEMATIC — 3

SCALE: NTS

GENERAL NOTES:

1. MEDIUM VOLTAGE SWITCHGEAR SHALL BE RATED 1200A, 15KV, 23KAIC 2-SEC, 37KAIC CLOSE AND LATCH.
2. MEDIUM VOLTAGE BREAKERS SHALL BE SAME MAKE AND MODEL THROUGHOUT.

CONSTRUCTION NOTES:

1 XXX

AUTOMATIC THROWOVER SYSTEM

THE AUTOMATIC THROWOVER SYSTEM SHALL CONTROL THE TWO (2) MAIN BREAKERS AND THE (2) BUS TIE BREAKERS IN CASE OF LOSS OF VOLTAGE AT EITHER SERVICE CONNECTION. FOR ALL CONDITIONS LISTED AS FOLLOWS, NORMAL VOLTAGE IS DEFINED AS BETWEEN PLUS 6% AND MINUS 13% OF STEADY-STATE SYSTEM NOMINAL VOLTAGE, LINE-TO-LINE AND LINE-TO-NEUTRAL AS APPLICABLE, AT FREQUENCY 60 HZ PLUS OR MINUS 0.5%.

THE AUTOMATIC THROWOVER SYSTEM SHALL BE DISABLED IF EITHER THE GENERATOR INTERTIE OR CAMPUS NORMAL POWER INTERTIE IS ACTIVE.

1. NORMAL VOLTAGE ON BOTH SERVICE CONNECTIONS:
   - A. BOTH MAIN BREAKERS ARE CLOSED.
   - B. BOTH BUS TIE BREAKERS ARE OPEN.
2. NORMAL VOLTAGE ON EITHER SERVICE CONNECTION, OVERCURRENT EVENT ON THE OPPOSITE MAIN BREAKER.
   - A. BUS TIE BREAKER CLOSEST TO THE TRIPPED MAIN BREAKER SHALL NOT CLOSE.
   - B. AUTOMATIC TRANSFER OPERATIONS SHALL BE BLOCKED TO PREVENT CLOSING INTO A POTENTIALLY FAULTED BUS.
   - C. UPON RESET OF THE TRIPPED BREAKER, AUTOMATIC TRANSFER OPERATIONS SHALL BE PERMITTED.
3. NORMAL VOLTAGE ON EITHER SERVICE CONNECTION, LOSS OF NORMAL VOLTAGE ON THE OTHER SERVICE CONNECTION:
   - A. BREAKER ON THE SERVICE FEEDER WHERE THERE HAS BEEN LOSS OF NORMAL VOLTAGE SHALL OPEN AFTER AN ADJUSTABLE TIME DELAY OF 0 TO 10 SECONDS, SET INITIALLY AT 1.5 SECONDS.
   - B. BUS TIE BREAKERS SHALL CLOSE IMMEDIATELY THEREAFTER.
4. LOSS OF NORMAL VOLTAGE ON ONE SERVICE FEEDER AND VOLTAGE IS NOT NORMAL ON THE OTHER (TARGET) SERVICE FEEDER:
   - A. BREAKER ON THE SERVICE FEEDER WHERE THERE HAS BEEN LOSS OF NORMAL VOLTAGE SHALL OPEN AFTER AN ADJUSTABLE TIME DELAY OF 0 TO 10 SECONDS, SET INITIALLY AT 1.5 SECONDS.
   - B. BUS TIE BREAKER CLOSEST TO THE TARGET SERVICE SHALL NOT CLOSE.
   - C. AT SUCH TIME THAT VOLTAGE BECOMES NORMAL ON THE TARGET SERVICE FEEDER FOR A TIME-ADJUSTABLE DURATION, THE BUS TIE BREAKER SHALL CLOSE. THE ADJUSTABLE DELAY SHALL BE 0 TO 10 SECONDS, SET INITIALLY AT 1.5 SECONDS.
5. LOSS OF VOLTAGE ON BOTH SERVICE FEEDERS SIMULTANEOUSLY, OR SEQUENTIAL LOSS OF A TARGET FEEDER WITHIN THE TIME DELAY FOR THE FIRST FEEDER TO OPEN ITS MAIN BREAKER:
   - A. MAIN BREAKER ON THE SERVICE FEEDER OR FEEDERS WHERE THERE HAS BEEN LOSS OF VOLTAGE SHALL OPEN AFTER AN ADJUSTABLE TIME DELAY OF 0 TO 10 SECONDS, SET INITIALLY AT 1.5 SECONDS.
   - B. IF BOTH MAIN BREAKERS HAVE OPENED, OR EITHER SERVICE FEEDER LOSES NORMAL VOLTAGE WHILE THE OTHER MAIN BREAKER IS IN TIME DELAY BEFORE OPENING, THE BUS TIE BREAKERS SHALL NOT CLOSE.
6. FOLLOWING AN AUTOMATIC TRANSFER OPERATION AND SUBSEQUENT RESTORATION OF NORMAL VOLTAGE ON A SERVICE FEEDER FOR WHICH ITS MAIN BREAKER WAS OPENED:
   - A. BUS TIE BREAKER CLOSEST TO THE OPEN MAIN BREAKER SHALL OPEN AFTER AN ADJUSTABLE TIME DELAY OF 0 TO 30 MINUTES, SET INITIALLY AT 5 MINUTES.
   - B. MAIN BREAKER ON RESTORED SERVICE SHALL CLOSE.
   - C. ON CONFIRMATION OF CLOSED MAIN BREAKER, THE OTHER BUS TIE BREAKER SHALL OPEN.
7. AT ALL TIMES, INTERLOCKS SHALL PREVENT PARALLELING THE TWO INCOMING SERVICE FEEDERS.
8. IN THE EVENT AN AUTOMATIC OPERATION IS NOT SUCCESSFUL, AN "AUTOMATIC THROWOVER ALARM" WILL OCCUR.

NOTES:

TASK IDENTIFICATION – SEE SEQUENCE OF CONSTRUCTION ON SHEETS ES003, ES004 AND ES005.

BREAKER INTERLOCK SYSTEM

OPERATING CONDITION	SOUTH MAIN	SOUTH TIE	EAST GEN TIE	CAMPUS INTERTIE	NORTH TIE	NORTH MAIN	ADDITIONAL REQUIREMENTS
NORMAL OPERATION	CLOSED	OPEN	OPEN	OPEN	OPEN	CLOSED	
GENERATOR LOAD TEST TO SOUTH	CLOSED	OPEN	CLOSED	OPEN	CLOSED	CLOSED	DISABLE REVERSE POWER ON SOUTH MAIN
GENERATOR LOAD TEST TO NORTH	CLOSED	CLOSED	CLOSED	OPEN	OPEN	CLOSED	DISABLE REVERSE POWER ON NORTH MAIN
ALL LOAD TO NORTH	OPEN	CLOSED	OPEN	OPEN	CLOSED	CLOSED	
ALL LOAD TO SOUTH	CLOSED	CLOSED	CLOSED	OPEN	OPEN	CLOSED	OPEN
SUPPLY THROUIGH CAMPUS INTERTIE	OPEN	OPEN OR CLOSED	OPEN	CLOSED	OPEN OR CLOSED	OPEN	
CAMPUS INTERTIE TO NORTH	OPEN	OPEN OR CLOSED	OPEN	CLOSED	CLOSED	CLOSED	ENFORCE REVERSE POWER ON NORTH MAIN
CAMPUS INTERTIE TO SOUTH	CLOSED	CLOSED	OPEN	CLOSED	OPEN OR CLOSED	OPEN	ENFORCE REVERSE POWER ON SOUTH MAIN

INTERLOCK METHOD

E – ELECTRICAL M – MANUAL (KEY) P – PROHIBITED	SOUTH MAIN	SOUTH TIE	EAST GEN TIE	CAMPUS INTERTIE	NORTH TIE	NORTH MAIN
SOUTH MAIN		E	E	E	E	P
SOUTH TIE	E		E	E,M	E	E
EAST GEN TIE	E	E		E	E	E
CAMPUS INTERTIE	E	E,M	E		E,M	E
NORTH TIE	E	E	E	E,M		E
NORTH MAIN	P	E	E	E	E	

AMENDMENT DRAWING

SUPERSEDES 100-EP501

–	–
–	–
–	–
–	–
–	–
–	–
–	–
–	–
REVISION 1	04-01-16
Revisions:	Date

CONSULTANTS:

SÄZÄN GROUP
600 Stewart St., Ste 1400
Seattle, Washington 98101
Tel 206.267.1700
Fax 206.267.1701
SAZAN # 269-1507

Drawing Title: MAIN SWITCHGEAR ELEVATION AND SCHEDULE

Approved Project Director: – – VAPAHCS PLANNING AND ENGINEERING

Project Title: VA PUGET SOUND HEALTH CARE SYSTEM UPGRADE SEATTLE ELECTRICAL DISTRIBUTION FROM 5kV TO 15kV

Location: 1660 South Columbian Way, Seattle, WA 98108

Date: 02-25-2016 | Checked: K.ANDERSON | Drawn: A.WOOLF

Project Number: 663-15-102

Building Number: 100

Drawing Number: 100-EP501R

Dwg. -- of --

Office of Construction and Facilities Management

Department of Veterans Affairs

VA FORM 08-6231

one eighth inch = one foot | one quarter inch = one foot | three eighths inch = one foot | one half inch = one foot | three quarters inch = one foot | one inch = one foot | one and one half inches = one foot | three inches = one foot
P:\269-1507 VAMC Seattle 5kV to 15kV Upgrade\DWG\ELEC\100-EP501.dwg 3-30-16 10:52:54 AM cpeters

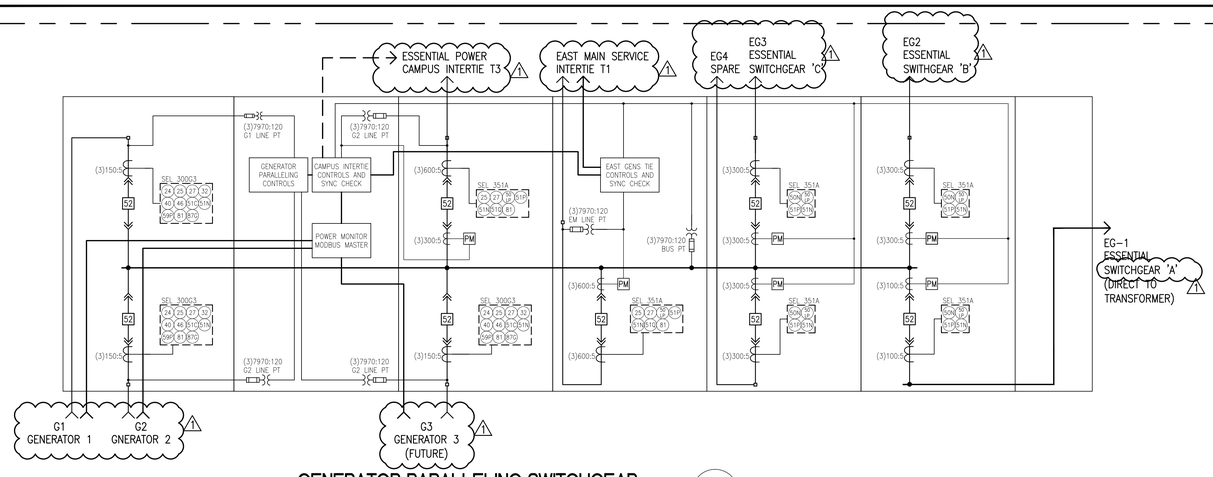

GENERATOR PARALLELING SWITCHGEAR RELAYING AND SCADA

1

SCALE: NTS

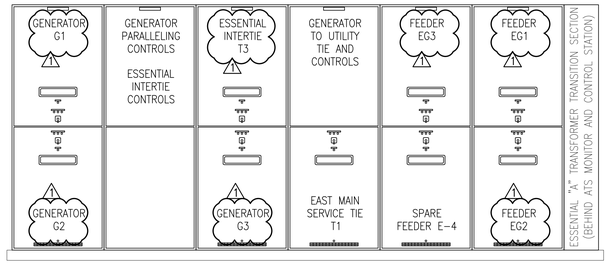

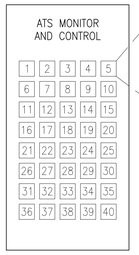

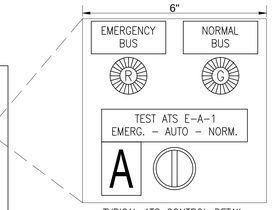

TYPICAL ATS CONTROL DETAIL
SEE SCHEDULE THIS SHEET

GENERATOR PARALLELING SWITCHGEAR ELEVATION

2

SCALE: 1/2" = 1'-0"

0 6" 1 2 4 6
1/2"=1'-0" feet

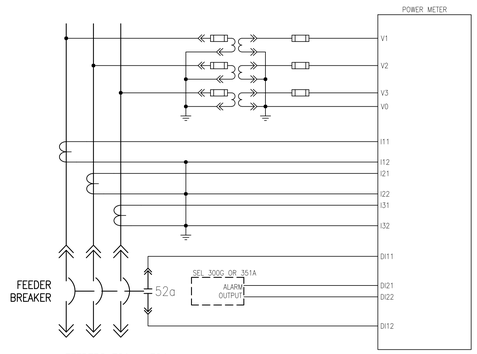

FEEDERS EG1 - EG4
EAST MAIN SERVICE TIE
ESSENTIAL POWER INTERTIE

FEEDER METER SCHEMATIC

3

SCALE: NTS

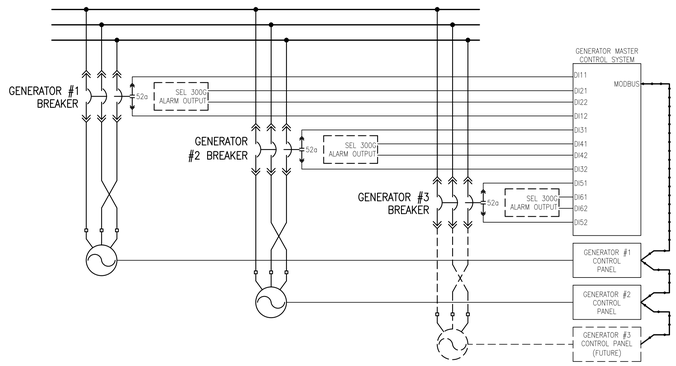

GENERATOR MONITORING SCHEMATIC

4

SCALE: NTS

GENERATOR MASTER CONTROL SYSTEM - GATEWAY PARAMETERS

DATA SOURCE	PARAMETER	DATA TYPE	MIN + MAX	LOGGED?	TYPICAL LABEL
MODBUS MASTER	BREAKER EG-1 STATE (52a)	-	-	NO	GENERATOR EG-1 CLOSED TO BUS
GEN-1 CONTROLLER	PHASE VOLTAGE A,B,C	REAL	MAX	YES	øA VOLTS - GENERATOR EG-1
GEN-1 CONTROLLER	PHASE CURRENT A,B,C	REAL	MAX	YES	øA AMPS - GENERATOR EG-1
GEN-1 CONTROLLER	TOTAL POWER (KW, KVA, KVAR)	REAL	MAX	YES	KW - GENERATOR EG-1
GEN-1 CONTROLLER	PCT RATED POWER (KW, KVA, KVAR)	REAL	MAX	YES	KW PCT CAPACITY - GENERATOR EG-1
MODBUS MASTER	TOTAL DEMAND (KW, KVA)	-	MAX	YES	KW DEMAND - GENERATOR EG-1
GEN-1 CONTROLLER	TOTAL ENERGY EXPORTED (KWH, KVARH)	LONG INTEGER	-	YES	KWH - GENERATOR EG-1
GEN-1 CONTROLLER	FREQUENCY	REAL	-	NO	HZ - GENERATOR EG-1
GEN-1 CONTROLLER	BATTERY VOLTAGE	REAL	-	NO	VOLTS DC - GENERATOR EG-1
GEN-1 CONTROLLER	ENGINE START COUNTER	INTEGER	-	NO	ENGINE START COUNT - GENERATOR EG-1
GEN-1 CONTROLLER	ENGINE RPM	REAL	-	NO	RPM - GENERATOR EG-1
GEN-1 CONTROLLER	ENGINE OPERATING HOURS	REAL	-	NO	HOURS - GENERATOR EG-1
GEN-1 CONTROLLER	FUEL LEVEL	REAL	-	NO	GALLONS - GENERATOR EG-1
GEN-1 CONTROLLER	SUMMARY ALARM	BOOLEAN	-	NO	SUMMARY ALARM - GENERATOR EG-1
MODBUS MASTER	SUMMARY ALARM COUNTER	-	-	NO	ALARM COUNT - GENERATOR EG-1
MODBUS MASTER	BREAKER EG-2 STATE (52a)	-	-	NO	GENERATOR EG-2 CLOSED TO BUS
GEN-2 CONTROLLER	PHASE VOLTAGE A,B,C	REAL	MAX	YES	øA VOLTS - GENERATOR EG-2
GEN-2 CONTROLLER	PHASE CURRENT A,B,C	REAL	MAX	YES	øA AMPS - GENERATOR EG-2
GEN-2 CONTROLLER	TOTAL POWER (KW, KVA, KVAR)	REAL	MAX	YES	KW - GENERATOR EG-2
GEN-2 CONTROLLER	PCT RATED POWER (KW, KVA, KVAR)	REAL	MAX	YES	KW PCT CAPACITY - GENERATOR EG-2
MODBUS MASTER	TOTAL DEMAND (KW, KVA)	-	MAX	YES	KW DEMAND - GENERATOR EG-2
GEN-2 CONTROLLER	TOTAL ENERGY EXPORTED (KWH, KVARH)	LONG INTEGER	-	YES	KWH - GENERATOR EG-2
GEN-2 CONTROLLER	FREQUENCY	REAL	-	NO	HZ - GENERATOR EG-2
GEN-2 CONTROLLER	BATTERY VOLTAGE	REAL	-	NO	VOLTS DC - GENERATOR EG-2
GEN-2 CONTROLLER	ENGINE START COUNTER	INTEGER	-	NO	ENGINE START COUNT - GENERATOR EG-2
GEN-2 CONTROLLER	ENGINE RPM	REAL	-	NO	RPM - GENERATOR EG-2
GEN-2 CONTROLLER	ENGINE OPERATING HOURS	REAL	-	NO	HOURS - GENERATOR EG-2
GEN-2 CONTROLLER	FUEL LEVEL	REAL	-	NO	GALLONS - GENERATOR EG-2
GEN-2 CONTROLLER	SUMMARY ALARM	BOOLEAN	-	NO	SUMMARY ALARM - GENERATOR EG-2
MODBUS MASTER	SUMMARY ALARM COUNTER	-	-	NO	ALARM COUNT - GENERATOR EG-2
MODBUS MASTER	BREAKER EG-3 STATE (52a)	-	-	NO	GENERATOR EG-3 CLOSED TO BUS
- PLACEHOLDER -	PHASE VOLTAGE A,B,C	REAL	MAX	NO	øA VOLTS - GENERATOR EG-3
- PLACEHOLDER -	PHASE CURRENT A,B,C	REAL	MAX	NO	øA AMPS - GENERATOR EG-3
- PLACEHOLDER -	TOTAL POWER (KW, KVA, KVAR)	REAL	MAX	NO	KW - GENERATOR EG-3
- PLACEHOLDER -	PCT RATED POWER (KW, KVA, KVAR)	REAL	MAX	NO	KW PCT CAPACITY - GENERATOR EG-3
MODBUS MASTER	TOTAL DEMAND (KW, KVA)	-	MAX	NO	KW DEMAND - GENERATOR EG-3
- PLACEHOLDER -	TOTAL ENERGY EXPORTED (KWH, KVARH)	LONG INTEGER	-	NO	KWH - GENERATOR EG-3
- PLACEHOLDER -	FREQUENCY	REAL	-	NO	HZ - GENERATOR EG-3
- PLACEHOLDER -	BATTERY VOLTAGE	REAL	-	NO	VOLTS DC - GENERATOR EG-3
- PLACEHOLDER -	ENGINE START COUNTER	INTEGER	-	NO	ENGINE START COUNT - GENERATOR EG-3
- PLACEHOLDER -	ENGINE RPM	REAL	-	NO	RPM - GENERATOR EG-3
- PLACEHOLDER -	ENGINE OPERATING HOURS	REAL	-	NO	HOURS - GENERATOR EG-3
- PLACEHOLDER -	FUEL LEVEL	REAL	-	NO	GALLONS - GENERATOR EG-3
- PLACEHOLDER -	SUMMARY ALARM	BOOLEAN	-	NO	SUMMARY ALARM - GENERATOR EG-3
MODBUS MASTER	SUMMARY ALARM COUNTER	-	-	NO	ALARM COUNT - GENERATOR EG-3

PARAMETERS LISTED AS PROVIDED BY MODBUS MASTER ARE ASSOCIATED WITH LOCAL INPUTS (BREAKER STATE) OR CALCULATED VALUES (DEMAND).
REAL-TIME DATA AND CALCULATED DEMAND VALUES ARE LOGGED ON 15-MINUTE CYCLES.
GENERATOR EG-3 PARAMETERS ARE PROGRAMMED FOR DISPLAY AND FUTURE IMPLEMENTATION BUT DISABLED AND NOT LOGGED.

BREAKER INTERLOCK SYSTEM

OPERATING CONDITION	EAST MAIN TIE	ESSENTIAL INTERTIE	GENERATOR EG-1	GENERATOR EG-2	GENERATOR EG-3	ADDITIONAL REQUIREMENTS
NORMAL OPERATION	OPEN	OPEN	OPEN	OPEN	OPEN	EG-3 IS FUTURE WITH PARALLELING LOGIC
GENERATOR LOAD TEST	CLOSED	OPEN	CLOSED	CLOSED	OPEN OR CLOSED	
GENERATOR BACKUP EAST CAMPUS	CLOSED	OPEN OR CLOSED	CLOSED	CLOSED	OPEN OR CLOSED	LOAD SHED MONITORING FOR EAST MAIN TIE
SUPPLY THROUGH ESSENTIAL INTERTIE	OPEN	CLOSED	OPEN OR CLOSED	OPEN OR CLOSED	OPEN OR CLOSED	

OP2

INTERLOCK METHOD

E - ELECTRICAL M - MANUAL (KEY) P - PROHIBITED	EAST MAIN TIE	ESSENTIAL INTERTIE	GENERATOR 1	GENERATOR 2	GENERATOR 3
EAST MAIN TIE		E,M	E	E	E
ESSENTIAL INTERTIE	E,M		E	E	E
GENERATOR 1	E	E		E	E
GENERATOR 2	E	E	E		E
GENERATOR 3	E	E	E	E	

ATS CONTROLS

POSITION	BUILDING	ATS	E-SWBD
1	100	E-A-1	A
2	103	E-A-2	A
3	100	E-B-1	B
4	100	E-C-1	C
5	100	C-B-1	B
6	100	C-C-1	C
7	100	C-C-1	C
8	100	Q-A-1	A
9	100	Q-A-2	A
10	100	Q-A-3	A
11	100	Q-A-4	A
12	100	Q-B-1	B
13	100	Q-B-2	B
14	100	Q-C-1	C
15	100	Q-C-2	C
16	100	Q-C-3	C
17	1	LS	B
18	102	X	C
19	102	Y	C
20	102	Z	C
21	PK ORG	E1	A
22	PK ORG	R1	A
23	PK ORG	R2	A
24	101	R-101.B-1	C
25	101	E-101.B-1	C
26	101	C-101.B-1	C
27	101	Q-101.B-1	C
28		-SPARE-	
29		-SPARE-	
30		-SPARE-	
31		-SPARE-	
32		-SPARE-	
33		-SPARE-	
34		-SPARE-	
35		-SPARE-	
36		-SPARE-	
37		-SPARE-	
38		-SPARE-	
39		-SPARE-	
40		-SPARE-	

GENERAL NOTES:

1. MEDIUM VOLTAGE SWITCHGEAR SHALL BE RATED 1200A, 15KV, 23KAIC 2-SEC, 37KAIC CLOSE AND LATCH.
2. MEDIUM VOLTAGE BREAKERS SHALL BE SAME MAKE AND MODEL THROUGHOUT.

CONSTRUCTION NOTES:

1 XXX

NOTES:

TASK IDENTIFICATION - SEE SEQUENCE OF CONSTRUCTION ON SHEETS ES003, ES004 AND ES005.

AMENDMENT DRAWING

SUPERSEDES 100-EP502

-	-
-	-
-	-
-	-
-	-
-	-
-	-
-	-
REVISION 1	04-01-16
Revisions	Date

CONSULTANTS:

SAZAN GROUP
600 Stewart St., Ste 1400
Seattle, Washington 98101
Tel 206.267.1700
Fax 206.267.1701
SAZAN # 269-1507

Drawing Title: GENERATOR PARALLELING SWITCHGEAR ELEVATION AND SCHEDULE

Approved Project Director: - - VAPAHCS PLANNING AND ENGINEERING

Project Title: VA PUGET SOUND HEALTH CARE SYSTEM UPGRADE SEATTLE ELECTRICAL DISTRIBUTION FROM 5kV TO 15kV

Location: 1660 South Columbian Way, Seattle, WA 98108

Date: 02-25-2016 | Checked: K.ANDERSON | Drawn: A.WOOLF

Project Number: 663-15-102

Building Number: 100

Drawing Number: 100-EP502R

Dwg. -- of --

Office of Construction and Facilities Management

Department of Veterans Affairs

VA FORM 08-6231

PA:269-1507 VAMC Seattle 5kV to 15kV Upgrade\DWG\ELEC\100-EP502.dwg 3-30-16 10:53:05 AM cpeters

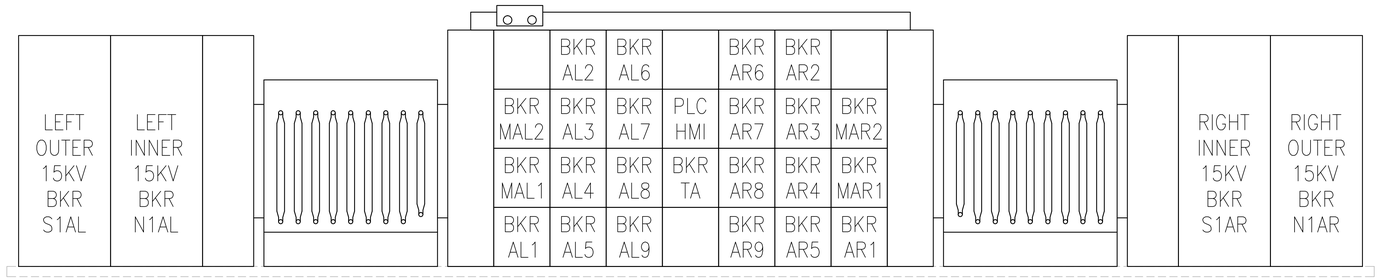

SUBSTATION A ELEVATION (1)

SCALE: 1/2" = 1'-0"

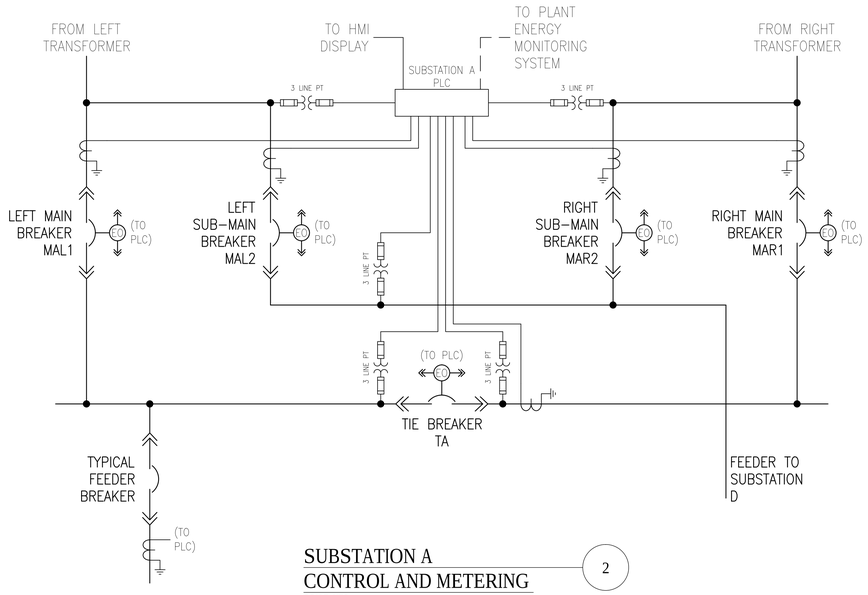

SUBSTATION A CONTROL AND METERING (2)

SCALE: NTS

INTERLOCK METHOD

E – ELECTRICAL M – MANUAL (KEY) P – PROHIBITED	LEFT OUTER 15KV BREAKER	LEFT INNER 15KV BREAKER	LEFT MAIN BREAKER	LEFT SUB-MAIN BREAKER	TIE BREAKER	RIGHT SUB-MAIN BREAKER	RIGHT MAIN BREAKER	RIGHT INNER 15KV BREAKER	RIGHT OUTER 15KV BREAKER
LEFT OUTER 15KV BREAKER		E,M	M	M					
LEFT INNER 15KV BREAKER	E,M		M	M					
LEFT MAIN BREAKER	M	M			E		P		
LEFT SUB-MAIN BREAKER	M	M	E			E			
TIE BREAKER			E				E		
RIGHT SUB-MAIN BREAKER				E				M	M
RIGHT MAIN BREAKER			P		E			M	M
RIGHT INNER 15KV BREAKER						M	M		E,M
RIGHT OUTER 15KV BREAKER						M	M	E,M	

LOW VOLTAGE SWITCHGEAR INTERLOCK SYSTEM

OPERATING CONDITION	LEFT MAIN	LEFT SUB-MAIN	TIE	RIGHT SUB-MAIN	RIGHT MAIN	ADDITIONAL REQUIREMENTS
NORMAL OPERATION	CLOSED	OPEN	OPEN	OPEN	OPEN	
LOAD ON LEFT TRANSFORMER	CLOSED	OPEN	CLOSED	OPEN	CLOSED	OPEN TRANSITION
LOAD ON RIGHT TRANSFORMER	CLOSED	CLOSED	CLOSED	OPEN	OPEN	OPEN TRANSITION
MAIN LEFT – SUB-MAIN RIGHT	OPEN	CLOSED	OPEN	OPEN	CLOSED	OPEN TRANSITION
MAIN RIGHT – SUB-MAIN LEFT	CLOSED	CLOSED	OPEN	OPEN	CLOSED	OPEN TRANSITION

15KV TRANSFER INTERLOCK SYSTEM

OPERATING CONDITION	OUTER 15KV	INNER 15KV	MAIN	SUB-MAIN	ADDITIONAL REQUIREMENTS
NORMAL OPERATION	OPEN	CLOSED	CLOSED	CLOSED	
UNLOAD NORMAL FEEDER	OPEN	CLOSED	OPEN	OPEN	MANUAL INTERLOCK PRIMARY TO SECONDARY
LOAD ALTERNATE FEEDER	CLOSED	OPEN	OPEN	OPEN	MANUAL INTERLOCK PRIMARY TO SECONDARY
ALTERNATE LOAD OPERATION	CLOSED	OPEN	CLOSED	CLOSED	

AUTOMATIC THROWOVER SYSTEM

THE AUTOMATIC THROWOVER SYSTEM SHALL CONTROL THE TWO (2) MAIN BREAKERS AND THE BUS TIE BREAKER IN CASE OF LOSS OF VOLTAGE AT EITHER TRANSFORMER SECONDARY CONNECTION. WHEN IN THE AUTOMATIC MODE THE SYSTEM SHALL ALLOW ONLY TWO (2) BREAKERS TO BE CLOSED AT ANY ONE TIME. THE SYSTEM SHALL ALSO CONTROL THE TWO (2) SUB-MAIN BREAKERS; WHEN IN AUTOMATIC MODE THE SYSTEM SHALL ALLOW ONLY ONE SUB-MAIN BREAKER TO BE CLOSED AT ANY ONE TIME. FOR ALL CONDITIONS LISTED AS FOLLOWS, NORMAL VOLTAGE IS DEFINED AS BETWEEN PLUS 6% AND MINUS 13% OF STEADY-STATE SYSTEM NOMINAL VOLTAGE, LINE-TO-LINE AND LINE-TO-NEUTRAL AS APPLICABLE, AT FREQUENCY 60 HZ PLUS OR MINUS 0.5%.

1) NORMAL VOLTAGE ON BOTH SUPPLY CONNECTIONS:

A) BOTH MAIN BREAKERS MAL1 AND MAR1 ARE CLOSED.

B) SUB-MAIN BREAKER MAL2 IS CLOSED.

C) SUB-MAIN BREAKER MAR2 IS OPEN.

D) BUS TIE BREAKER IS OPEN.

2) NORMAL VOLTAGE ON EITHER SUPPLY CONNECTION, OVERCURRENT EVENT ON THE OPPOSITE MAIN BREAKER.

A) BUS TIE BREAKER SHALL NOT CLOSE.

B) AUTOMATIC TRANSFER OPERATIONS SHALL BE BLOCKED TO PREVENT CLOSING INTO A POTENTIALLY FAULTED BUS.

C) UPON RESET OF THE TRIPPED BREAKER, AUTOMATIC TRANSFER OPERATIONS SHALL BE PERMITTED.

3) NORMAL VOLTAGE ON EITHER SUPPLY CONNECTION, OVERCURRENT EVENT ON THE OPPOSITE SUB-MAIN BREAKER.

A) AUTOMATIC TRANSFER OPERATIONS SHALL BE BLOCKED TO PREVENT CLOSING INTO A POTENTIALLY FAULTED BUS.

B) UPON RESET OF THE TRIPPED BREAKER, AUTOMATIC TRANSFER OPERATIONS SHALL BE PERMITTED.

4) NORMAL VOLTAGE ON EITHER SUPPLY CONNECTION, LOSS OF NORMAL VOLTAGE ON THE OTHER SUPPLY CONNECTION:

A) MAIN BREAKER AND SUB-MAIN BREAKER ON THE SUPPLY FEEDER WHERE THERE HAS BEEN LOSS OF NORMAL VOLTAGE SHALL OPEN AFTER AN ADJUSTABLE TIME DELAY OF 0 TO 10 SECONDS, SET INITIALLY AT 1.5 SECONDS.

B) BUS TIE BREAKER AND OPPOSITE SUB-MAIN BREAKER SHALL CLOSE IMMEDIATELY THEREAFTER.

5) LOSS OF NORMAL VOLTAGE ON ONE SUPPLY FEEDER AND VOLTAGE IS NOT NORMAL ON THE OTHER (TARGET) SUPPLY FEEDER:

A) MAIN BREAKER AND SUB-MAIN BREAKER ON THE SUPPLY FEEDER WHERE THERE HAS BEEN LOSS OF NORMAL VOLTAGE SHALL OPEN AFTER AN ADJUSTABLE TIME DELAY OF 0 TO 10 SECONDS, SET INITIALLY AT 1.5 SECONDS.

B) BUS TIE BREAKER AND OPPOSITE SUB-MAIN BREAKER SHALL NOT CLOSE.

C) AT SUCH TIME THAT VOLTAGE BECOMES NORMAL ON THE TARGET SUPPLY FEEDER FOR A TIME-ADJUSTABLE DURATION, BUS TIE BREAKER AND OPPOSITE SUB-MAIN BREAKER SHALL CLOSE. THE ADJUSTABLE DELAY SHALL BE 0 TO 10 SECONDS, SET INITIALLY AT 1.5 SECONDS.

6) LOSS OF VOLTAGE ON BOTH SUPPLY FEEDERS SIMULTANEOUSLY, OR SEQUENTIAL LOSS OF A TARGET FEEDER WITHIN THE TIME DELAY FOR THE FIRST FEEDER TO OPEN ITS MAIN BREAKER:

A) MAIN BREAKER AND SUB-MAIN BREAKER ON THE SUPPLY FEEDER OR FEEDERS WHERE THERE HAS BEEN LOSS OF VOLTAGE SHALL OPEN AFTER AN ADJUSTABLE TIME DELAY OF 0 TO 10 SECONDS, SET INITIALLY AT 1.5 SECONDS.

B) IF BOTH MAIN BREAKERS HAVE OPENED, OR EITHER SUPPLY FEEDER LOSES NORMAL VOLTAGE WHILE THE OTHER MAIN BREAKER IS IN TIME DELAY BEFORE OPENING, THE BUS TIE BREAKER SHALL NOT CLOSE.

C) IF EITHER SUPPLY FEEDER LOSES NORMAL VOLTAGE WHILE THE OTHER SUB-MAIN BREAKER IS IN TIME DELAY BEFORE OPENING, THE TARGET SUB-MAIN BREAKER SHALL NOT CLOSE.

7) FOLLOWING AN AUTOMATIC TRANSFER OPERATION AND SUBSEQUENT RESTORATION OF NORMAL VOLTAGE ON A SUPPLY FEEDER FOR WHICH ITS MAIN BREAKER WAS OPENED:

A) TIE BREAKER SHALL OPEN AFTER AN ADJUSTABLE TIME DELAY OF 0 TO 30 MINUTES, SET INITIALLY AT 5 MINUTES.

B) MAIN BREAKER ON RESTORED SUPPLY SHALL CLOSE.

C) SUB-MAIN BREAKER ON RESTORED SUPPLY SHALL CLOSE.

8) AT ALL TIMES, INTERLOCKS SHALL PREVENT PARALLELING THE TWO INCOMING SUPPLY FEEDERS.

9) IN THE EVENT AN AUTOMATIC OPERATION IS NOT SUCCESSFUL, AN "AUTOMATIC THROWOVER ALARM" WILL OCCUR.

GENERAL NOTES:

1. SWITCHGEAR SHALL BE INTERLOCKED TO PREVENT CONNECTION BETWEEN BOTH TRANSFORMERS THROUGH MAIN|TIE|MAIN OR SUB-MAIN|SUB-MAIN BREAKER SETS.
2. TRANSFER FROM NORTH SERVICE TO SOUTH SERVICE OR VICE VERSA SHALL BE OPEN TRANSITION AT EITHER END OF DOUBLE-ENDED UNIT SUBSTATION.
3. MAIN AND SUB-MAIN BREAKERS SHALL BOTH BE OPEN BEFORE TRANSFER IS ALLOWED AT CORRESPONDING 15KV BREAKERS.
4. THE BREAKER NAMING CONVENTION FOR NORMAL POWER SUBSTATIONS SHALL BE AS FOLLOWS:
   - A. 15KV FRONT END BREAKERS: FEEDER NUMBER + SUBSTATION LETTER + SUBSTATION END, E.G. "N1AL" = 15KV FEEDER N1 + NORMAL SUBSTATION A + LEFT END.
   - B. 480V MAIN BREAKERS: "M" PLUS SUBSTATION LETTER + SUBSTATION END + MAIN/SUB-MAIN RANK, E.G. "MAR2" = MAIN SUBSTATION A RIGHT END RANK 2 (SUB-MAIN).
   - C. 480V FEEDER BREAKERS: SUBSTATION LETTER + SUBSTATION END + CIRCUIT NUMBER.
   - D. 480V TIE BREAKER: "T" + SUBSTATION LETTER.

0 6" 1 2 4 6
1/2"=1'-0" feet

AMENDMENT DRAWING
NEW DRAWING

-	-
-	-
-	-
-	-
-	-
-	-
-	-
-	-
REVISION 1	04-01-16
Revisions:	Date

CONSULTANTS:

SÄZÄN GROUP
600 Stewart St., Ste 1400
Seattle, Washington 98101
Tel 206.267.1700
Fax 206.267.1701
SAZAN # 269-1507

Drawing Title: SUBSTATION A ELEVATION

Approved Project Director: - - VAPAHCS PLANNING AND ENGINEERING

Project Title: VA PUGET SOUND HEALTH CARE SYSTEM UPGRADE SEATTLE ELECTRICAL DISTRIBUTION FROM 5kV TO 15kV

Location: 1660 South Columbian Way, Seattle, WA 98108

Date: 04-01-2016 | Checked: K.ANDERSON | Drawn: A.WOOLF

Project Number: 663-15-102

Building Number: 100

Drawing Number: 100-EP503

Dwg. -- of --

Office of Construction and Facilities Management

Department of Veterans Affairs

VA FORM 08-6231

P:\269-1507 VAMC Seattle 5kV to 15kV Upgrade\DWG\ELEC\100-EP503.dwg 3-30-16 10:53:14 AM cpeters

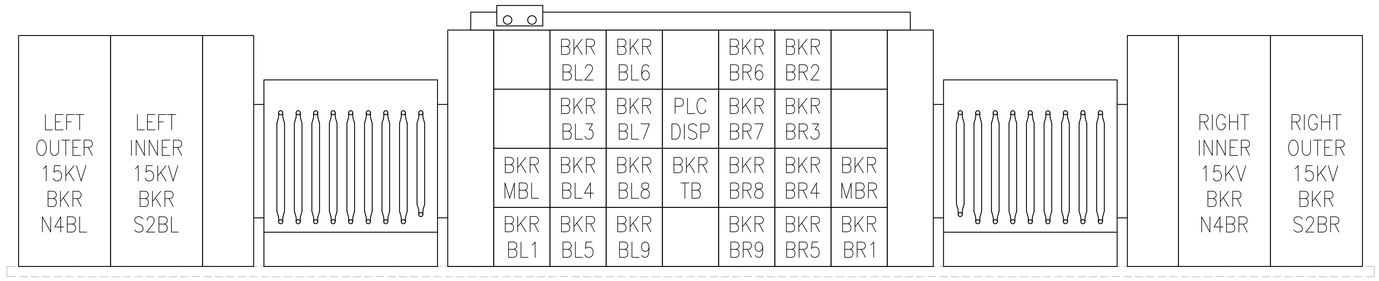

SUBSTATION B ELEVATION (1)

SCALE: 1/2" = 1'-0"

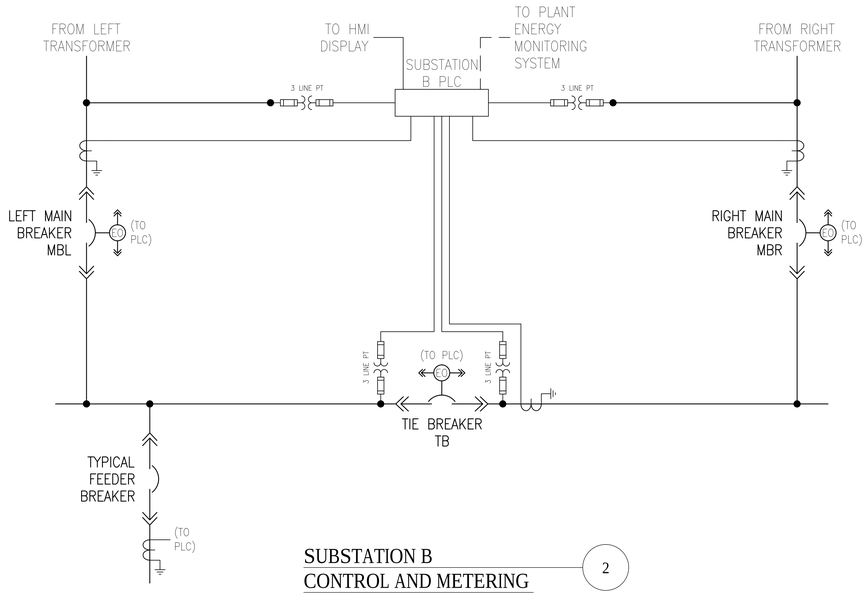

SUBSTATION B CONTROL AND METERING (2)

SCALE: NTS

GENERAL NOTES:

1. SWITCHGEAR SHALL BE INTERLOCKED TO PREVENT CONNECTION BETWEEN BOTH TRANSFORMERS THROUGH MAIN|TIE|MAIN BREAKER SET.
2. TRANSFER FROM NORTH SERVICE TO SOUTH SERVICE OR VICE VERSA SHALL BE OPEN TRANSITION AT EITHER END OF DOUBLE-ENDED UNIT SUBSTATION.
3. THE BREAKER NAMING CONVENTION FOR NORMAL POWER SUBSTATIONS SHALL BE AS FOLLOWS:
   - A. 15KV FRONT END BREAKERS: FEEDER NUMBER + SUBSTATION LETTER + SUBSTATION END, E.G. "N4BL" = 15KV FEEDER N4 + NORMAL SUBSTATION B + LEFT END.
   - B. 480V MAIN BREAKERS: "M" PLUS SUBSTATION LETTER + SUBSTATION END, E.G. "MBL" = MAIN SUBSTATION B LEFT END.
   - C. 480V FEEDER BREAKERS: SUBSTATION LETTER + SUBSTATION END + CIRCUIT NUMBER.
   - D. 480V TIE BREAKER: "T" + SUBSTATION LETTER.

AUTOMATIC THROWOVER SYSTEM

THE AUTOMATIC THROWOVER SYSTEM SHALL CONTROL THE TWO (2) MAIN BREAKERS AND THE BUS TIE BREAKER IN CASE OF LOSS OF VOLTAGE AT EITHER TRANSFORMER SECONDARY CONNECTION. WHEN IN THE AUTOMATIC MODE THE SYSTEM SHALL ALLOW ONLY TWO (2) BREAKERS TO BE CLOSED AT ANY ONE TIME. FOR ALL CONDITIONS LISTED AS FOLLOWS, NORMAL VOLTAGE IS DEFINED AS BETWEEN PLUS 6% AND MINUS 13% OF STEADY-STATE SYSTEM NOMINAL VOLTAGE, LINE-TO-LINE AND LINE-TO-NEUTRAL AS APPLICABLE, AT FREQUENCY 60 HZ PLUS OR MINUS 0.5%.

1) NORMAL VOLTAGE ON BOTH SUPPLY CONNECTIONS:
   - A) BOTH MAIN BREAKERS ARE CLOSED.
   - B) BUS TIE BREAKER IS OPEN.

2) NORMAL VOLTAGE ON EITHER SUPPLY CONNECTION, OVERCURRENT EVENT ON THE OPPOSITE MAIN BREAKER.
   - A) BUS TIE BREAKER SHALL NOT CLOSE.
   - B) AUTOMATIC TRANSFER OPERATIONS SHALL BE BLOCKED TO PREVENT CLOSING INTO A POTENTIALLY FAULTED BUS.
   - C) UPON RESET OF THE TRIPPED BREAKER, AUTOMATIC TRANSFER OPERATIONS SHALL BE PERMITTED.

3) NORMAL VOLTAGE ON EITHER SUPPLY CONNECTION, LOSS OF NORMAL VOLTAGE ON THE OTHER SUPPLY CONNECTION:
   - A) BREAKER ON THE SUPPLY FEEDER WHERE THERE HAS BEEN LOSS OF NORMAL VOLTAGE SHALL OPEN AFTER AN ADJUSTABLE TIME DELAY OF 0 TO 10 SECONDS, SET INITIALLY AT 1.5 SECONDS.
   - B) BUS TIE BREAKER SHALL CLOSE IMMEDIATELY THEREAFTER.

4) LOSS OF NORMAL VOLTAGE ON ONE SUPPLY FEEDER AND VOLTAGE IS NOT NORMAL ON THE OTHER (TARGET) SUPPLY FEEDER:
   - A) BREAKER ON THE SUPPLY FEEDER WHERE THERE HAS BEEN LOSS OF NORMAL VOLTAGE SHALL OPEN AFTER AN ADJUSTABLE TIME DELAY OF 0 TO 10 SECONDS, SET INITIALLY AT 1.5 SECONDS.
   - B) BUS TIE BREAKER SHALL NOT CLOSE.
   - C) AT SUCH TIME THAT VOLTAGE BECOMES NORMAL ON THE TARGET SUPPLY FEEDER FOR A TIME-ADJUSTABLE DURATION, THE BUS TIE BREAKER SHALL CLOSE. THE ADJUSTABLE DELAY SHALL BE 0 TO 10 SECONDS, SET INITIALLY AT 1.5 SECONDS.

5) LOSS OF VOLTAGE ON BOTH SUPPLY FEEDERS SIMULTANEOUSLY, OR SEQUENTIAL LOSS OF A TARGET FEEDER WITHIN THE TIME DELAY FOR THE FIRST FEEDER TO OPEN ITS MAIN BREAKER:
   - A) BREAKER ON THE SUPPLY FEEDER OR FEEDERS WHERE THERE HAS BEEN LOSS OF VOLTAGE SHALL OPEN AFTER AN ADJUSTABLE TIME DELAY OF 0 TO 10 SECONDS, SET INITIALLY AT 1.5 SECONDS.
   - B) IF BOTH MAIN BREAKERS HAVE OPENED, OR EITHER SUPPLY FEEDER LOSES NORMAL VOLTAGE WHILE THE OTHER MAIN BREAKER IS IN TIME DELAY BEFORE OPENING, THE BUS TIE BREAKER SHALL NOT CLOSE.

5) FOLLOWING AN AUTOMATIC TRANSFER OPERATION AND SUBSEQUENT RESTORATION OF NORMAL VOLTAGE ON A SUPPLY FEEDER FOR WHICH ITS MAIN BREAKER WAS OPENED:
   - A) TIE BREAKER SHALL OPEN AFTER AN ADJUSTABLE TIME DELAY OF 0 TO 30 MINUTES, SET INITIALLY AT 5 MINUTES.
   - B) MAIN BREAKER ON RESTORED SUPPLY SHALL CLOSE.

6) AT ALL TIMES, INTERLOCKS SHALL PREVENT PARALLELING THE TWO INCOMING SUPPLY FEEDERS.

7) IN THE EVENT AN AUTOMATIC OPERATION IS NOT SUCCESSFUL, AN "AUTOMATIC THROWOVER ALARM" WILL OCCUR.

INTERLOCK METHOD

E - ELECTRICAL
M - MANUAL (KEY)
P - PROHIBITED

	LEFT OUTER 15KV BREAKER	LEFT INNER 15KV BREAKER	LEFT MAIN BREAKER	TIE BREAKER	RIGHT MAIN BREAKER	RIGHT INNER 15KV BREAKER	RIGHT OUTER 15KV BREAKER
LEFT OUTER 15KV BREAKER		E,M	M				
LEFT INNER 15KV BREAKER	E,M		M				
LEFT MAIN BREAKER	M	M		E	P		
TIE BREAKER			E		E		
RIGHT MAIN BREAKER			P	E		M	M
RIGHT INNER 15KV BREAKER					M		E,M
RIGHT OUTER 15KV BREAKER					M	E,M	

LOW VOLTAGE SWITCHGEAR INTERLOCK SYSTEM

OPERATING CONDITION	LEFT MAIN	TIE	RIGHT MAIN	ADDITIONAL REQUIREMENTS
NORMAL OPERATION	CLOSED	OPEN	OPEN	
LOAD ON LEFT TRANSFORMER	CLOSED	CLOSED	CLOSED	OPEN TRANSITION
LOAD ON RIGHT TRANSFORMER	CLOSED	CLOSED	OPEN	OPEN TRANSITION

15KV TRANSFER INTERLOCK SYSTEM

OPERATING CONDITION	OUTER 15KV	INNER 15KV	MAIN	ADDITIONAL REQUIREMENTS
NORMAL OPERATION	OPEN	CLOSED	CLOSED	
UNLOAD NORMAL FEEDER	OPEN	CLOSED	OPEN	MANUAL INTERLOCK PRIMARY TO SECONDARY
LOAD ALTERNATE FEEDER	CLOSED	OPEN	OPEN	MANUAL INTERLOCK PRIMARY TO SECONDARY
ALTERNATE LOAD OPERATION	CLOSED	OPEN	CLOSED	

0 6" 1 2 4 6
1/2"=1'-0" feet

AMENDMENT DRAWING

NEW DRAWING

-	-
-	-
-	-
-	-
-	-
-	-
-	-
-	-
REVISION 1	04-01-16
Revisions:	Date

CONSULTANTS:

SAZAN GROUP
600 Stewart St., Ste 1400
Seattle, Washington 98101
Tel 206.267.1700
Fax 206.267.1701
SAZAN # 269-1507

Drawing Title: SUBSTATION B ELEVATION

Approved: Project Director
-
-
VAPAHCS PLANNING AND ENGINEERING

Project Title: VA PUGET SOUND HEALTH CARE SYSTEM UPGRADE SEATTLE ELECTRICAL DISTRIBUTION FROM 5kV TO 15kV

Location: 1660 South Columbian Way, Seattle, WA 98108

Date: 04-01-2016 | Checked: K.ANDERSON | Drawn: A.WOOLF

Project Number: 663-15-102

Building Number: 100

Drawing Number: 100-EP504

Dwg. -- of --

Office of Construction and Facilities Management

Department of Veterans Affairs

VA FORM 08-6231

P:\269-1507 VAMC Seattle 5kV to 15kV Upgrade\DWG\ELEC\100-EP504.dwg 3-30-16 10:53:24 AM cpeters

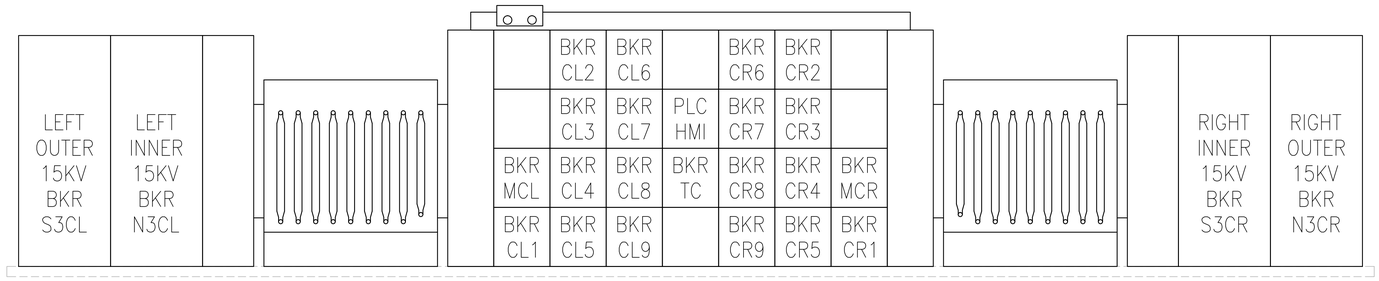

SUBSTATION C ELEVATION (1)

SCALE: 1/2" = 1'-0"

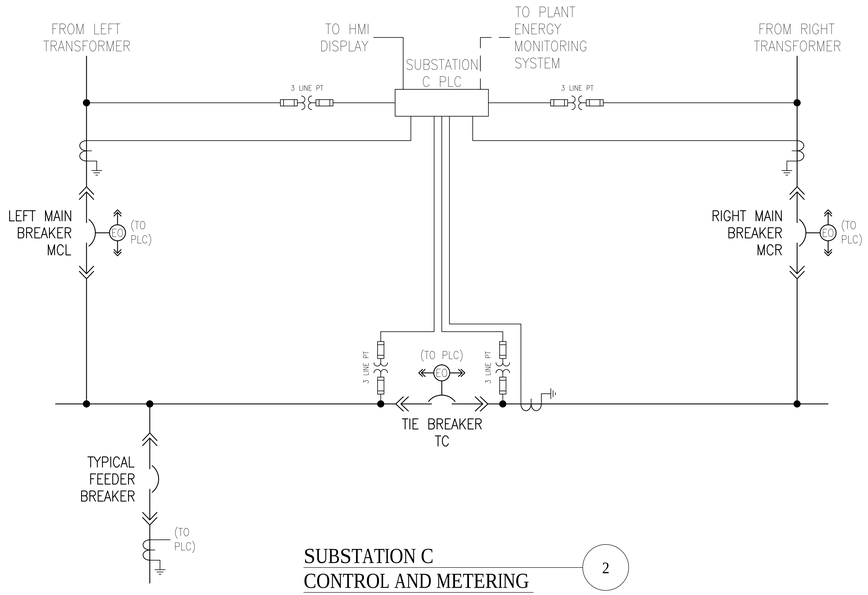

SUBSTATION C CONTROL AND METERING (2)

SCALE: NTS

INTERLOCK METHOD

E – ELECTRICAL M – MANUAL (KEY) P – PROHIBITED	LEFT OUTER 15KV BREAKER	LEFT INNER 15KV BREAKER	LEFT MAIN BREAKER	TIE BREAKER	RIGHT MAIN BREAKER	RIGHT INNER 15KV BREAKER	RIGHT OUTER 15KV BREAKER
LEFT OUTER 15KV BREAKER		E,M	M				
LEFT INNER 15KV BREAKER	E,M		M				
LEFT MAIN BREAKER	M	M		E	P		
TIE BREAKER			E		E		
RIGHT MAIN BREAKER			P	E		M	M
RIGHT INNER 15KV BREAKER					M		E,M
RIGHT OUTER 15KV BREAKER					M	E,M	

LOW VOLTAGE SWITCHGEAR INTERLOCK SYSTEM

OPERATING CONDITION	LEFT MAIN	TIE	RIGHT MAIN	ADDITIONAL REQUIREMENTS
NORMAL OPERATION	CLOSED	OPEN	OPEN	
LOAD ON LEFT TRANSFORMER	CLOSED	CLOSED	CLOSED	OPEN TRANSITION
LOAD ON RIGHT TRANSFORMER	CLOSED	CLOSED	OPEN	OPEN TRANSITION

15KV TRANSFER INTERLOCK SYSTEM

OPERATING CONDITION	OUTER 15KV	INNER 15KV	MAIN	ADDITIONAL REQUIREMENTS
NORMAL OPERATION	OPEN	CLOSED	CLOSED	
UNLOAD NORMAL FEEDER	OPEN	CLOSED	OPEN	MANUAL INTERLOCK PRIMARY TO SECONDARY
LOAD ALTERNATE FEEDER	CLOSED	OPEN	OPEN	MANUAL INTERLOCK PRIMARY TO SECONDARY
ALTERNATE LOAD OPERATION	CLOSED	OPEN	CLOSED	

GENERAL NOTES:

1. SWITCHGEAR SHALL BE INTERLOCKED TO PREVENT CONNECTION BETWEEN BOTH TRANSFORMERS THROUGH MAIN|TIE|MAIN BREAKER SET.
2. TRANSFER FROM NORTH SERVICE TO SOUTH SERVICE OR VICE VERSA SHALL BE OPEN TRANSITION AT EITHER END OF DOUBLE-ENDED UNIT SUBSTATION.
3. THE BREAKER NAMING CONVENTION FOR NORMAL POWER SUBSTATIONS SHALL BE AS FOLLOWS:
   - A. 15KV FRONT END BREAKERS: FEEDER NUMBER + SUBSTATION LETTER + SUBSTATION END, E.G. "N3CL" = 15KV FEEDER N3 + NORMAL SUBSTATION C + LEFT END.
   - B. 480V MAIN BREAKERS: "M" PLUS SUBSTATION LETTER + SUBSTATION END, E.G. "MCR" = MAIN SUBSTATION C RIGHT END.
   - C. 480V FEEDER BREAKERS: SUBSTATION LETTER + SUBSTATION END + CIRCUIT NUMBER.
   - D. 480V TIE BREAKER: "T" + SUBSTATION LETTER.

AUTOMATIC THROWOVER SYSTEM

THE AUTOMATIC THROWOVER SYSTEM SHALL CONTROL THE TWO (2) MAIN BREAKERS AND THE BUS TIE BREAKER IN CASE OF LOSS OF VOLTAGE AT EITHER TRANSFORMER SECONDARY CONNECTION. WHEN IN THE AUTOMATIC MODE THE SYSTEM SHALL ALLOW ONLY TWO (2) BREAKERS TO BE CLOSED AT ANY ONE TIME. FOR ALL CONDITIONS LISTED AS FOLLOWS, NORMAL VOLTAGE IS DEFINED AS BETWEEN PLUS 6% AND MINUS 13% OF STEADY-STATE SYSTEM NOMINAL VOLTAGE, LINE-TO-LINE AND LINE-TO-NEUTRAL AS APPLICABLE, AT FREQUENCY 60 HZ PLUS OR MINUS 0.5%.

1) NORMAL VOLTAGE ON BOTH SUPPLY CONNECTIONS:
   - A) BOTH MAIN BREAKERS ARE CLOSED.
   - B) BUS TIE BREAKER IS OPEN.

2) NORMAL VOLTAGE ON EITHER SUPPLY CONNECTION, OVERCURRENT EVENT ON THE OPPOSITE MAIN BREAKER.
   - A) BUS TIE BREAKER SHALL NOT CLOSE.
   - B) AUTOMATIC TRANSFER OPERATIONS SHALL BE BLOCKED TO PREVENT CLOSING INTO A POTENTIALLY FAULTED BUS.
   - C) UPON RESET OF THE TRIPPED BREAKER, AUTOMATIC TRANSFER OPERATIONS SHALL BE PERMITTED.

3) NORMAL VOLTAGE ON EITHER SUPPLY CONNECTION, LOSS OF NORMAL VOLTAGE ON THE OTHER SUPPLY CONNECTION:
   - A) BREAKER ON THE SUPPLY FEEDER WHERE THERE HAS BEEN LOSS OF NORMAL VOLTAGE SHALL OPEN AFTER AN ADJUSTABLE TIME DELAY OF 0 TO 10 SECONDS, SET INITIALLY AT 1.5 SECONDS.
   - B) BUS TIE BREAKER SHALL CLOSE IMMEDIATELY THEREAFTER.

4) LOSS OF NORMAL VOLTAGE ON ONE SUPPLY FEEDER AND VOLTAGE IS NOT NORMAL ON THE OTHER (TARGET) SUPPLY FEEDER:
   - A) BREAKER ON THE SUPPLY FEEDER WHERE THERE HAS BEEN LOSS OF NORMAL VOLTAGE SHALL OPEN AFTER AN ADJUSTABLE TIME DELAY OF 0 TO 10 SECONDS, SET INITIALLY AT 1.5 SECONDS.
   - B) BUS TIE BREAKER SHALL NOT CLOSE.
   - C) AT SUCH TIME THAT VOLTAGE BECOMES NORMAL ON THE TARGET SUPPLY FEEDER FOR A TIME-ADJUSTABLE DURATION, THE BUS TIE BREAKER SHALL CLOSE. THE ADJUSTABLE DELAY SHALL BE 0 TO 10 SECONDS, SET INITIALLY AT 1.5 SECONDS.

5) LOSS OF VOLTAGE ON BOTH SUPPLY FEEDERS SIMULTANEOUSLY, OR SEQUENTIAL LOSS OF A TARGET FEEDER WITHIN THE TIME DELAY FOR THE FIRST FEEDER TO OPEN ITS MAIN BREAKER:
   - A) BREAKER ON THE SUPPLY FEEDER OR FEEDERS WHERE THERE HAS BEEN LOSS OF VOLTAGE SHALL OPEN AFTER AN ADJUSTABLE TIME DELAY OF 0 TO 10 SECONDS, SET INITIALLY AT 1.5 SECONDS.
   - B) IF BOTH MAIN BREAKERS HAVE OPENED, OR EITHER SUPPLY FEEDER LOSES NORMAL VOLTAGE WHILE THE OTHER MAIN BREAKER IS IN TIME DELAY BEFORE OPENING, THE BUS TIE BREAKER SHALL NOT CLOSE.

5) FOLLOWING AN AUTOMATIC TRANSFER OPERATION AND SUBSEQUENT RESTORATION OF NORMAL VOLTAGE ON A SUPPLY FEEDER FOR WHICH ITS MAIN BREAKER WAS OPENED:
   - A) TIE BREAKER SHALL OPEN AFTER AN ADJUSTABLE TIME DELAY OF 0 TO 30 MINUTES, SET INITIALLY AT 5 MINUTES.
   - B) MAIN BREAKER ON RESTORED SUPPLY SHALL CLOSE.

6) AT ALL TIMES, INTERLOCKS SHALL PREVENT PARALLELING THE TWO INCOMING SUPPLY FEEDERS.

7) IN THE EVENT AN AUTOMATIC OPERATION IS NOT SUCCESSFUL, AN "AUTOMATIC THROWOVER ALARM" WILL OCCUR.

0 6" 1 2 4 6
1/2"=1'-0" feet

AMENDMENT DRAWING

NEW DRAWING

Revisions:	Date
REVISION 1	04-01-16

CONSULTANTS:

SAZAN GROUP
600 Stewart St., Ste 1400
Seattle, Washington 98101
Tel 206.267.1700
Fax 206.267.1701
SAZAN # 269-1507

Drawing Title: SUBSTATION C ELEVATION

Approved: Project Director
-
-
VAPAHCS PLANNING AND ENGINEERING

Project Title: VA PUGET SOUND HEALTH CARE SYSTEM UPGRADE SEATTLE ELECTRICAL DISTRIBUTION FROM 5kV TO 15kV

Location: 1660 South Columbian Way, Seattle, WA 98108

Date: 04-01-2016 | Checked: K.ANDERSON | Drawn: A.WOOLF

Project Number: 663-15-102

Building Number: 100

Drawing Number: 100-EP505

Dwg. -- of --

Office of Construction and Facilities Management

Department of Veterans Affairs

VA FORM 08-6231

P:\269-1507 VAMC Seattle 5kV to 15kV Upgrade\DWG\ELEC\100-EP505.dwg 3-30-16 10:53:33 AM cpeters

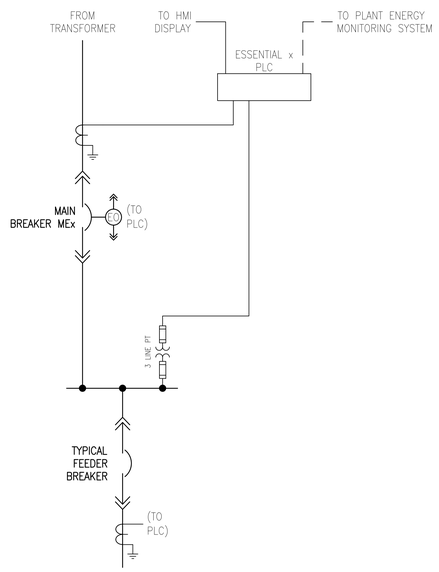

ESSENTIAL SUBSTATION CONTROL AND METERING (4)

SCALE: NTS

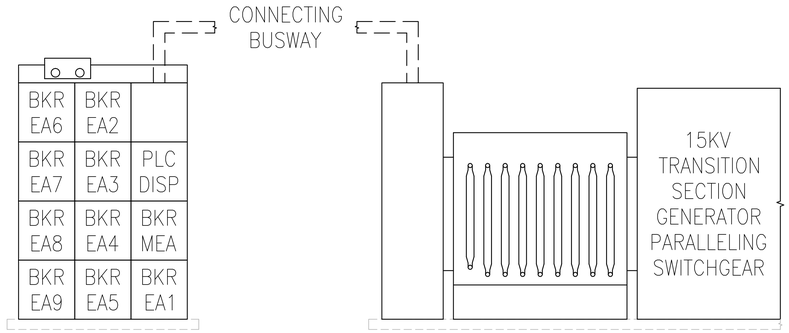

ESSENTIAL SUBSTATION A ELEVATION (1)

SCALE: 1/2" = 1'-0"

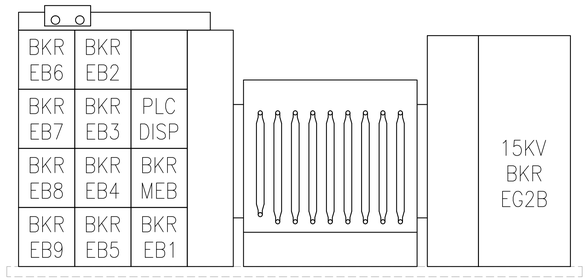

ESSENTIAL SUBSTATION B ELEVATION (2)

SCALE: 1/2" = 1'-0"

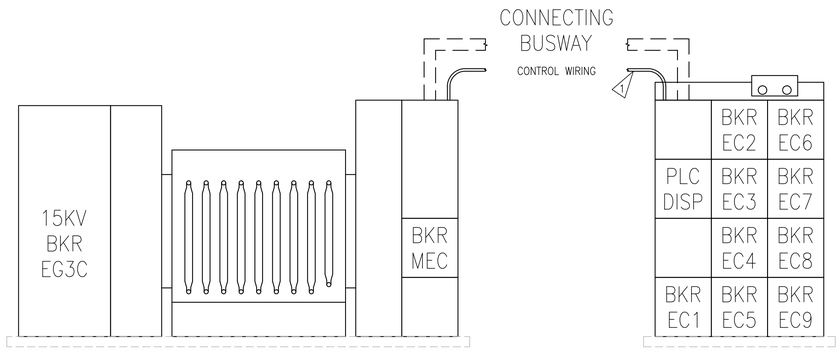

ESSENTIAL SUBSTATION C ELEVATION (3)

SCALE: 1/2" = 1'-0"

0 6" 1 2 4 6
1/2"=1'-0" feet

GENERAL NOTES:

1. THE BREAKER NAMING CONVENTION FOR ESSENTIAL POWER SUBSTATIONS SHALL BE AS FOLLOWS:
   - A. 15KV FRONT END BREAKERS: FEEDER NUMBER + SUBSTATION LETTER, E.G. "EG2B" = 15KV FEEDER EG2 + ESSENTIAL SUBSTATION B.
   - B. 480V MAIN BREAKERS: "ME" + SUBSTATION LETTER.
   - C. 480V FEEDER BREAKERS: "E" + SUBSTATION LETTER + CIRCUIT NUMBER.

CONSTRUCTION NOTES:

1. TYPE, NUMBER AND SIZE OF CONTROL WIRES AND CONTROL CONDUITS SHALL BE SPECIFIED FROM SWITCHGEAR MANUFACTURER SHOP DRAWINGS. MAINTAIN CONTROL CIRCUIT SEPARATION REQUIREMENTS SPECIFIED BY MANUFACTURER.

AMENDMENT DRAWING

NEW DRAWING

Revisions	Date
-	-
-	-
-	-
-	-
-	-
-	-
-	-
-	-
REVISION 1	04-01-16

CONSULTANTS:

SAZAN GROUP
600 Stewart St., Ste 1400
Seattle, Washington 98101
Tel 206.267.1700
Fax 206.267.1701
SAZAN # 269-1507

Drawing Title: ESSENTIAL SUBSTATIONS A,B,C ELEVATIONS

Approved Project Director: - - VAPAHCS PLANNING AND ENGINEERING

Project Title: VA PUGET SOUND HEALTH CARE SYSTEM UPGRADE SEATTLE ELECTRICAL DISTRIBUTION FROM 5kV TO 15kV

Location: 1660 South Columbian Way, Seattle, WA 98108

Date: 04-01-2016 | Checked: K.ANDERSON | Drawn: A.WOOLF

Project Number: 663-15-102

Building Number: 100

Drawing Number: 100-EP506

Dwg. -- of --

Office of Construction and Facilities Management

Department of Veterans Affairs

P:\269-1507 VAMC Seattle 5kV to 15kV Upgrade\DWG\ELEC\100-EP506.dwg 3-30-16 10:53:42 AM cpeters

VA FORM 08-6231

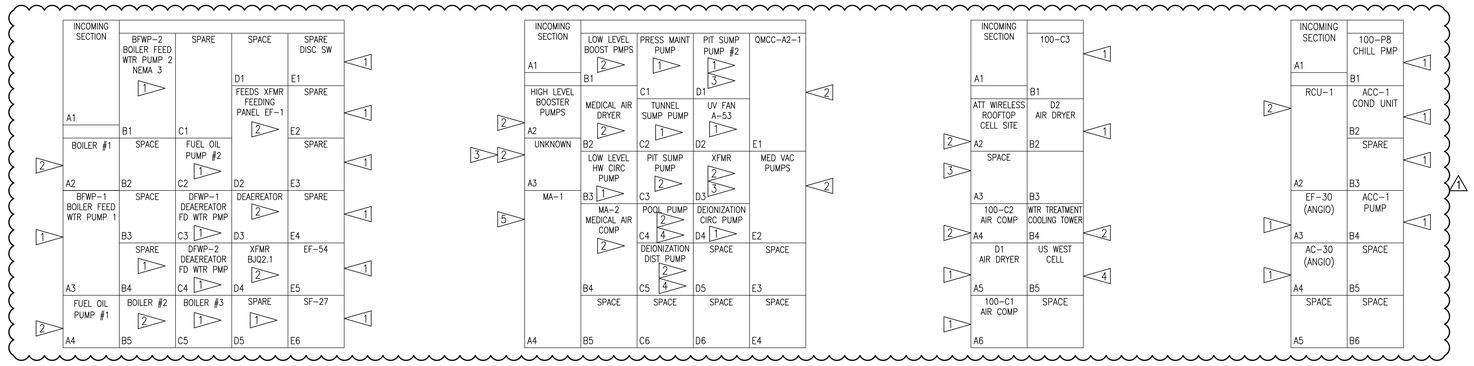

MCC QMCC A1
(BOILER RM BE-105)

MCC QMCC A2
(COMPRESSOR RM BE-100)

MCC QMCC A2.1
(CHILLER RM BE-107)

MCC QMCC A3
(MECH ROOM 3D-127)

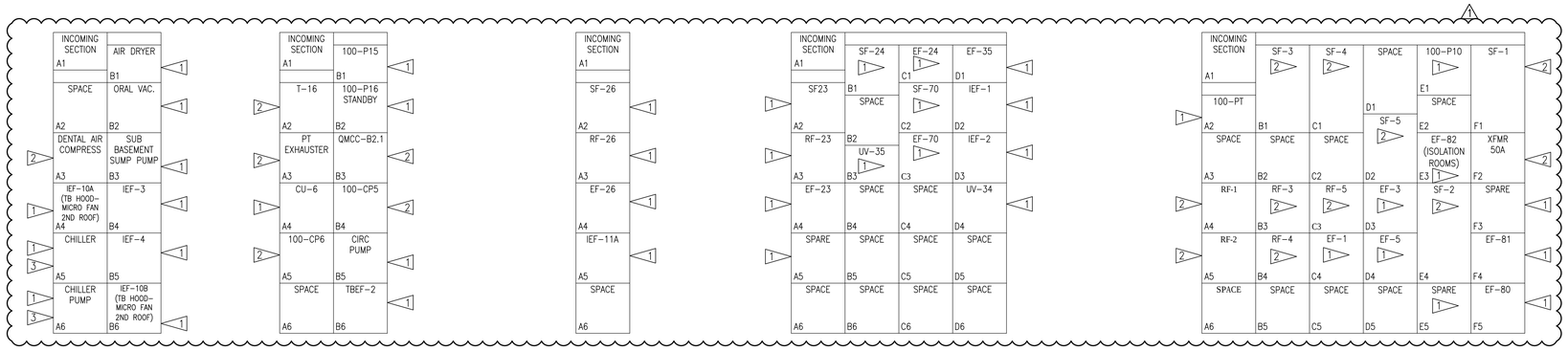

MCC QMCC B1
(MECH ROOM 1D-147b)

MCC QMCC B2
(MECH ROOM BD-111)

MCC QMCC B2.1
(MECH ROOM 4D-1229)

MCC QMCC B3
(MECH ROOM 3D-127)

MCC QMCC C1
(CORE POENTHOUSE 8A-103)

GENERAL NOTES:

1. REFER TO MCC SCHEDULES ON DRAWINGS 100-EP801, 100-EP802 AND 100-EP803 FOR ADDITIONAL WORK.
2. COORDINATE SHUT DOWN OF ALL EQUIPMENT WITH OWNERS' REPRESENTATIVE PRIOR TO START OF WORK.
3. RECONNECT ALL BRANCH FEEDERS AND CONTROL WIRING.
4. PROVIDE LABELS ON NEW BUCKET SWITCH ENCLOSURES.

REFERENCE DRAWING:

1. REFER TO DRAWINGS 100-E206 AND 100-E207 (PROJECT NO. 663-014) FOR ORIGINAL ELEVATION DRAWINGS.

CONSTRUCTION NOTES:

1. REPLACE EXISTING BUCKET WITH NEW CONSISTING OF CIRCUIT BREAKER, STARTER, OVERLOAD RELAYS, PILOT LIGHTS, HOA SWITCH, OPERATING HANDLE, CONTROL POWER TRANSFORMER, RESET BUTTON AND ALL APPURTENANCES TO PROVIDE A COMPLETE AND WORKING BUCKET SWITCH.
2. REPLACE EXISTING BUCKET WITH NEW CONSISTING OF CIRCUIT BREAKER AND OPERATING HANDLE.
3. FIELD VERIFY EQUIPMENT SERVED. REDLINE AS-BUILT DRAWINGS AND RETURN TO VA, RESIDENT ENGINEER (RE).
4. COORDINATE WITH VA RE IF EQUIPMENT IS IN SERVICE. PROVIDE BUCKET SWITCH AS REQUIRED.
5. EXISTING BUCKET SWITCH SHALL REMAIN.

OP4

AMENDMENT DRAWING

SUPERSEDES 100-EP510

Revisions:	Date
REVISION 1	04-01-16

CONSULTANTS:

SAZAN GROUP
600 Stewart St., Ste 1400
Seattle, Washington 98101
Tel 206.267.1700
Fax 206.267.1701
SAZAN # 269-1507

Drawing Title: MCC ELEVATIONS

Approved: Project Director
-
-
VAPAHCS PLANNING AND ENGINEERING

Project Title: VA PUGET SOUND HEALTH CARE SYSTEM UPGRADE SEATTLE ELECTRICAL DISTRIBUTION FROM 5kV TO 15kV

Location: 1660 South Columbian Way, Seattle, WA 98108

Date: 02-25-2016 | Checked: K.ANDERSON | Drawn: M.CAILAO

Project Number: 663-15-102

Building Number: 100

Drawing Number: 100-EP510R

Dwg. -- of --

Office of Construction and Facilities Management

Department of Veterans Affairs

VA FORM 08-6231

P:\269-1507 VAMC Seattle 5kV to 15kV Upgrade\DWG\ELEC\100-EP510.dwg 3-30-16 10:53:52 AM cpeters

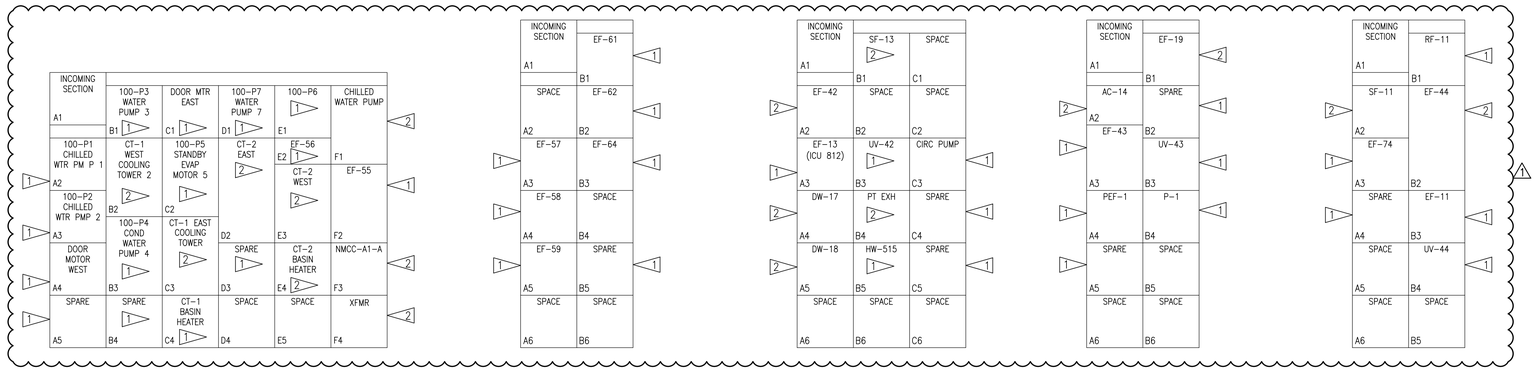

MCC NMCC A1
(CHILLER RM BE-107)

MCC NMCC A1.1
(COMPRESSOR RM BE-100)

MCC NMCC B1
(MECH RM BD-123)

MCC NMCC B2
(MECH RM BD-116)

MCC NMCC B3
(MECH RM BD-111)

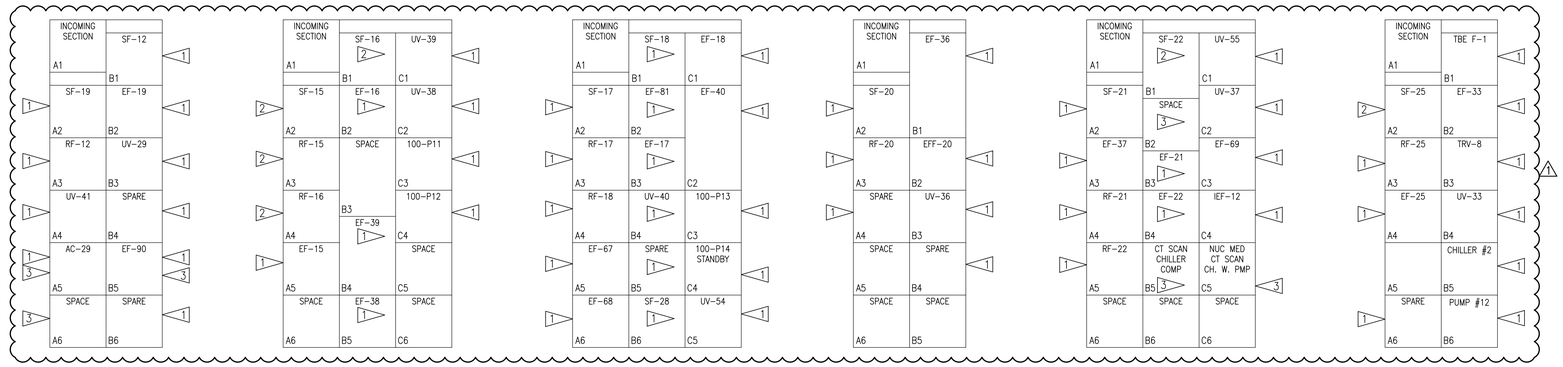

MCC NMCC B4
(MECH RM BD-109)

MCC NMCC B5
(MECH RM 1D-147a)

MCC NMCC B6
(MECH RM 1D-138)

MCC NMCC B7
(MECH RM 2D-171)

MCC NMCC B8
(MECH RM 2D-152)

MCC NMCC B9
(MECH RM 4D-122a)

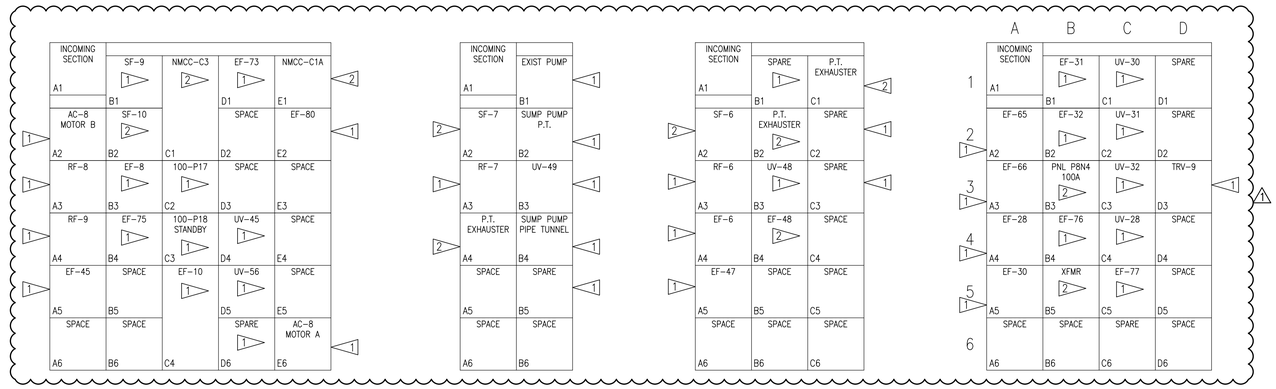

MCC NMCC C1
(MECHANICAL RM BB-120)

MCC NMCC C1A
(MECHANICAL RM BA-107b)

MCC NMCC C2
(MECH RM BC-103)

MCC NMCC C3
(CORE PENTHOUSE 8A-103)

OP4

GENERAL NOTES:

1. REFER TO MCC SCHEDULES ON DRAWINGS 100-EP801, 100-EP802 AND 100-EP803 FOR ADDITIONAL WORK.
2. COORDINATE SHUT DOWN OF ALL EQUIPMENT WITH OWNERS' REPRESENTATIVE PRIOR TO START OF WORK.
3. RECONNECT ALL BRANCH FEEDERS AND CONTROL WIRING.
4. PROVIDE LABELS ON NEW BUCKET SWITCH ENCLOSURES.

REFERENCE DRAWING:

1. REFER TO DRAWINGS 100-E206 AND 100-E207 (PROJECT NO. 663-014) FOR ORIGINAL ELEVATION DRAWINGS.

CONSTRUCTION NOTES:

1. REPLACE EXISTING BUCKET WITH NEW CONSISTING OF CIRCUIT BREAKER, STARTER, OVERLOAD RELAYS, PILOT LIGHTS, HOA SWITCH, OPERATING HANDLE, CONTROL POWER TRANSFORMER, RESET BUTTON AND ALL APPURTENANCES TO PROVIDE A COMPLETE AND WORKING BUCKET SWITCH.
2. REPLACE EXISTING BUCKET WITH NEW CONSISTING OF CIRCUIT BREAKER AND OPERATING HANDLE.
3. FIELD VERIFY EQUIPMENT SERVED. REDLINE AS-BUILT DRAWINGS AND RETURN TO VA, RESIDENT ENGINEER (RE).

AMENDMENT DRAWING

SUPERSEDES 100-EP511

-	-
-	-
-	-
-	-
-	-
-	-
-	-
-	-
REVISION 1	04-01-16
Revisions:	Date

CONSULTANTS:

SÄZÄN GROUP
600 Stewart St., Ste 1400
Seattle, Washington 98101
Tel 206.267.1700
Fax 206.267.1701
SAZAN # 269-1507

Drawing Title: MCC ELEVATIONS

Approved Project Director: - - VAPAHCS PLANNING AND ENGINEERING

Project Title: VA PUGET SOUND HEALTH CARE SYSTEM UPGRADE SEATTLE ELECTRICAL DISTRIBUTION FROM 5kV TO 15kV

Location: 1660 South Columbian Way, Seattle, WA 98108

Date: 02-25-2016 | Checked: K.ANDERSON | Drawn: M.CAILAO

Project Number: 663-15-102

Building Number: 100

Drawing Number: 100-EP511R

Dwg. -- of --

Office of Construction and Facilities Management

Department of Veterans Affairs

P:\269-1507 VAMC Seattle 5kV to 15kV Upgrade\DWG\ELEC\100-EP511.dwg 3-30-16 10:54:02 AM cpeters
VA FORM 08-6231

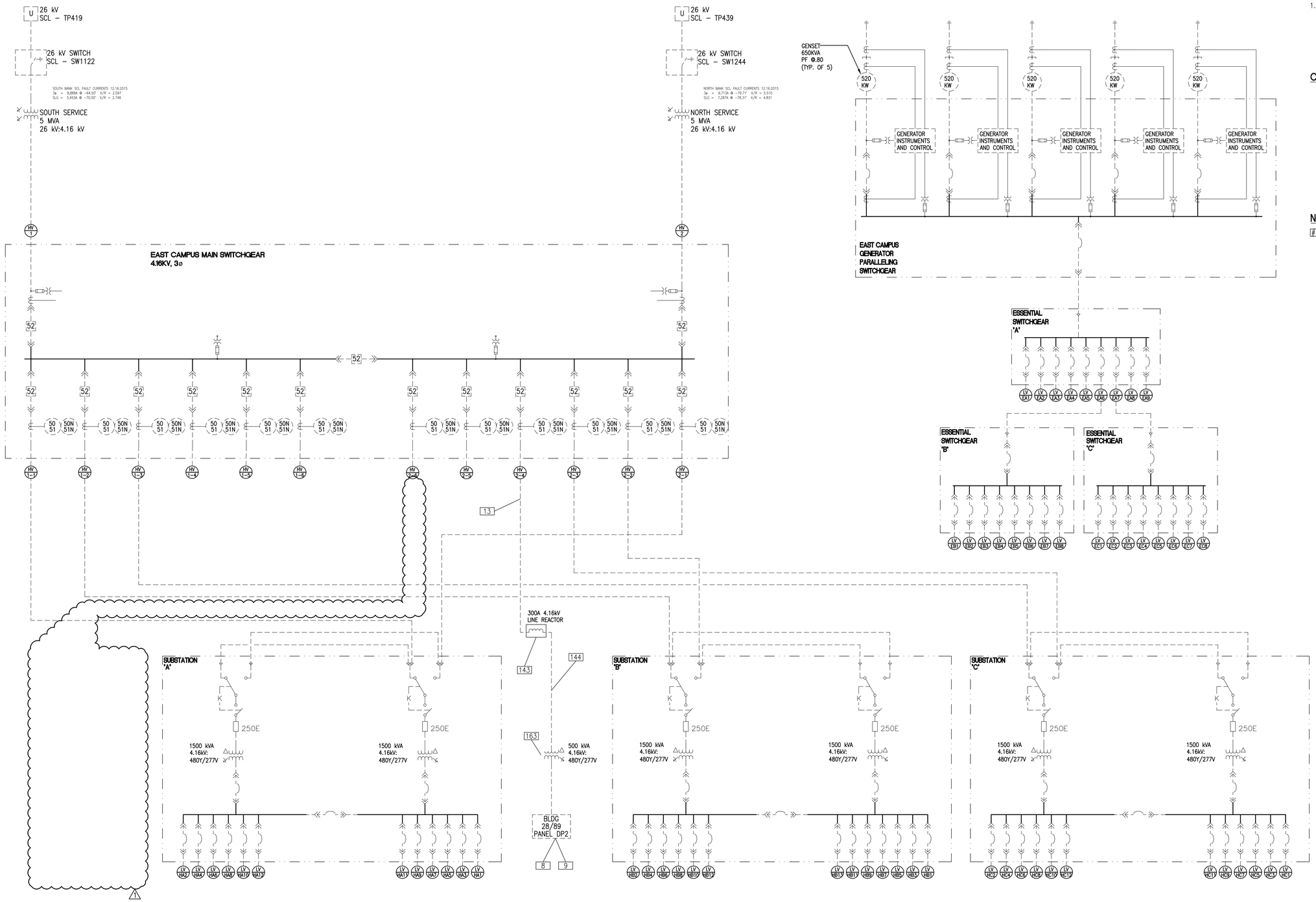

GENERAL NOTES:

1. SEE SHEETS ES800 AND ES801 FOR FEEDER SCHEDULES.

CONSTRUCTION NOTES:

NOTES:

TASK IDENTIFICATION – SEE SEQUENCE OF CONSTRUCTION ON SHEET ES003, ES004 AND ES005.

8 9 13 143 144 163

AMENDMENT DRAWING

SUPERSEDES 100-EP601T0

–	–
–	–
–	–
–	–
–	–
–	–
–	–
–	–
REVISION 1	04-01-16
Revisions:	Date

CONSULTANTS:

SAZAN GROUP
600 Stewart St., Ste 1400
Seattle, Washington 98101
Tel 206.267.1700
Fax 206.267.1701
SAZAN # 269-1507

Drawing Title: PRIMARY DISTRIBUTION - ONE LINE - TEMPORARY #0

Approved: Project Director: VAPAHCS PLANNING AND ENGINEERING

Project Title: VA PUGET SOUND HEALTH CARE SYSTEM UPGRADE SEATTLE ELECTRICAL DISTRIBUTION FROM 5kV TO 15kV

Location: 1660 South Columbian Way, Seattle, WA 98108

Date	Checked	Drawn
02-25-2016	K.ANDERSON	A.WOOLF

Project Number: 663-15-102

Building Number: 100

Drawing Number: 100-EP601T0R

Dwg. -- of --

Office of Construction and Facilities Management

Department of Veterans Affairs

VA FORM 08-6231

P:\269-1507 VAMC Seattle 5kV to 15kV Upgrade\DWG\ELEC\100-EP601T0.dwg 3-30-16 10:54:13 AM cpeters

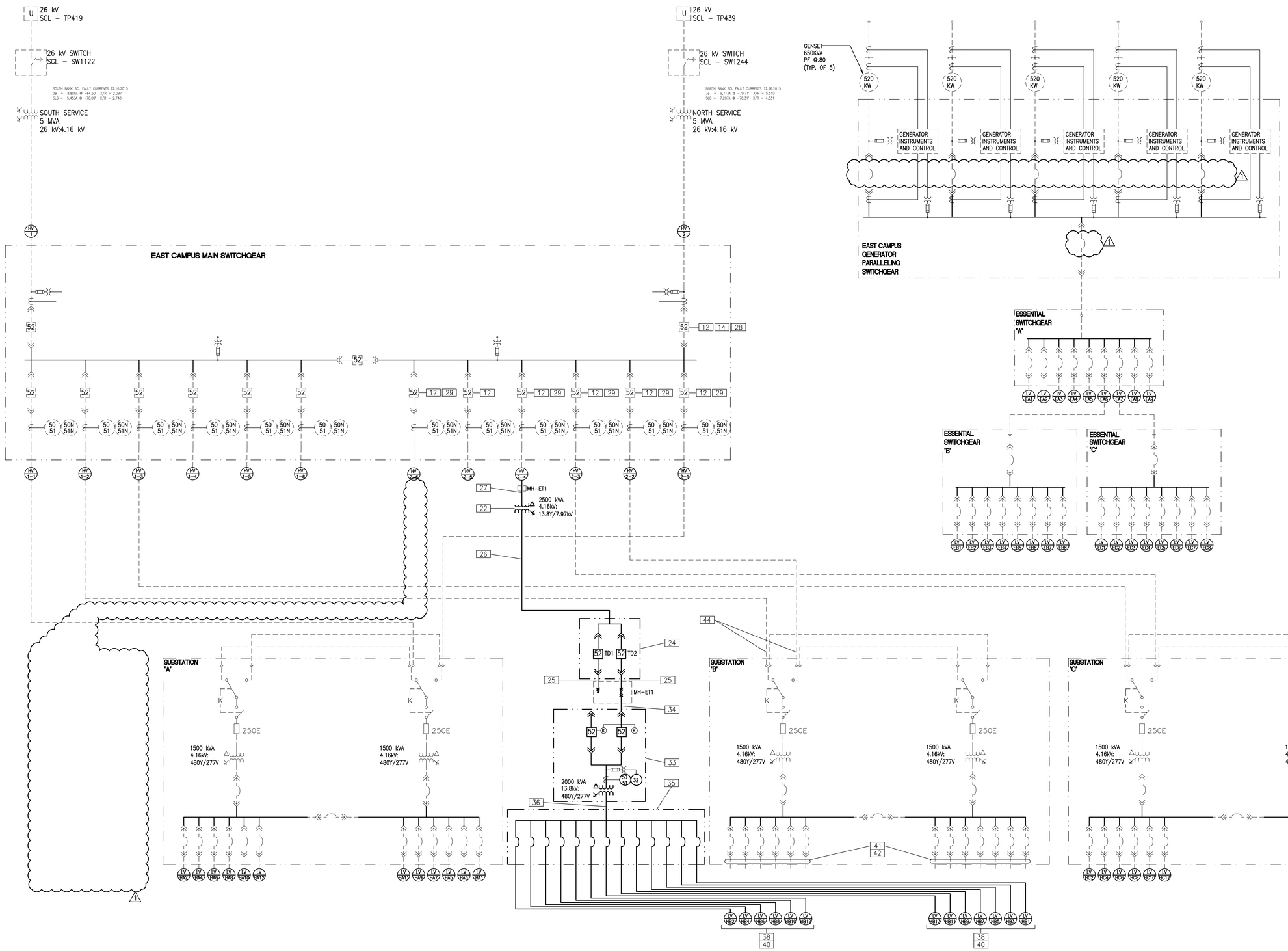

GENERAL NOTES:

1. EXISTING SHOWN LIGHT LINE WEIGHT. TEMPORARY INSTALLATIONS SHOWN BOLD LINE WEIGHT.
2. SEE SHEETS ES800 AND ES801 FOR FEEDER SCHEDULES.
3. ALL 15KV BREAKERS SHALL BE THE SAME MAKE AND MODEL, INTERCHANGEABLE TO ANY POSITION.

CONSTRUCTION NOTES:

1 XXX

NOTES:

TASK IDENTIFICATION – SEE SEQUENCE OF CONSTRUCTION ON SHEETS ES003, ES004 AND ES005

12 14 22 24 25 26 27 28 29
33 34 35 36 38 40 41 42 44

AMENDMENT DRAWING

SUPERSEDES 100-EP601T1

REVISION 1	04-01-16
Revisions:	Date

CONSULTANTS:

SAZAN GROUP
600 Stewart St., Ste 1400
Seattle, Washington 98101
Tel 206.267.1700
Fax 206.267.1701
SAZAN # 269-1507

Drawing Title: PRIMARY DISTRIBUTION – ONE LINE – TEMPORARY #1

Approved Project Director: – – VAPAHCS PLANNING AND ENGINEERING

Project Title: VA PUGET SOUND HEALTH CARE SYSTEM UPGRADE SEATTLE ELECTRICAL DISTRIBUTION FROM 5kV TO 15kV

Location: 1660 South Columbian Way, Seattle, WA 98108

Date: 02-25-2016 | Checked: K.ANDERSON | Drawn: A.WOOLF

Project Number: 663-15-102

Building Number: 100

Drawing Number: 100-EP601T1R

Dwg. -- of --

Office of Construction and Facilities Management

Department of Veterans Affairs

VA FORM 08-6231

P:\269-1507 VAMC Seattle 5kV to 15kV Upgrade\DWG\ELEC\100-EP601T1.dwg 3-30-16 10:54:22 AM cpeters

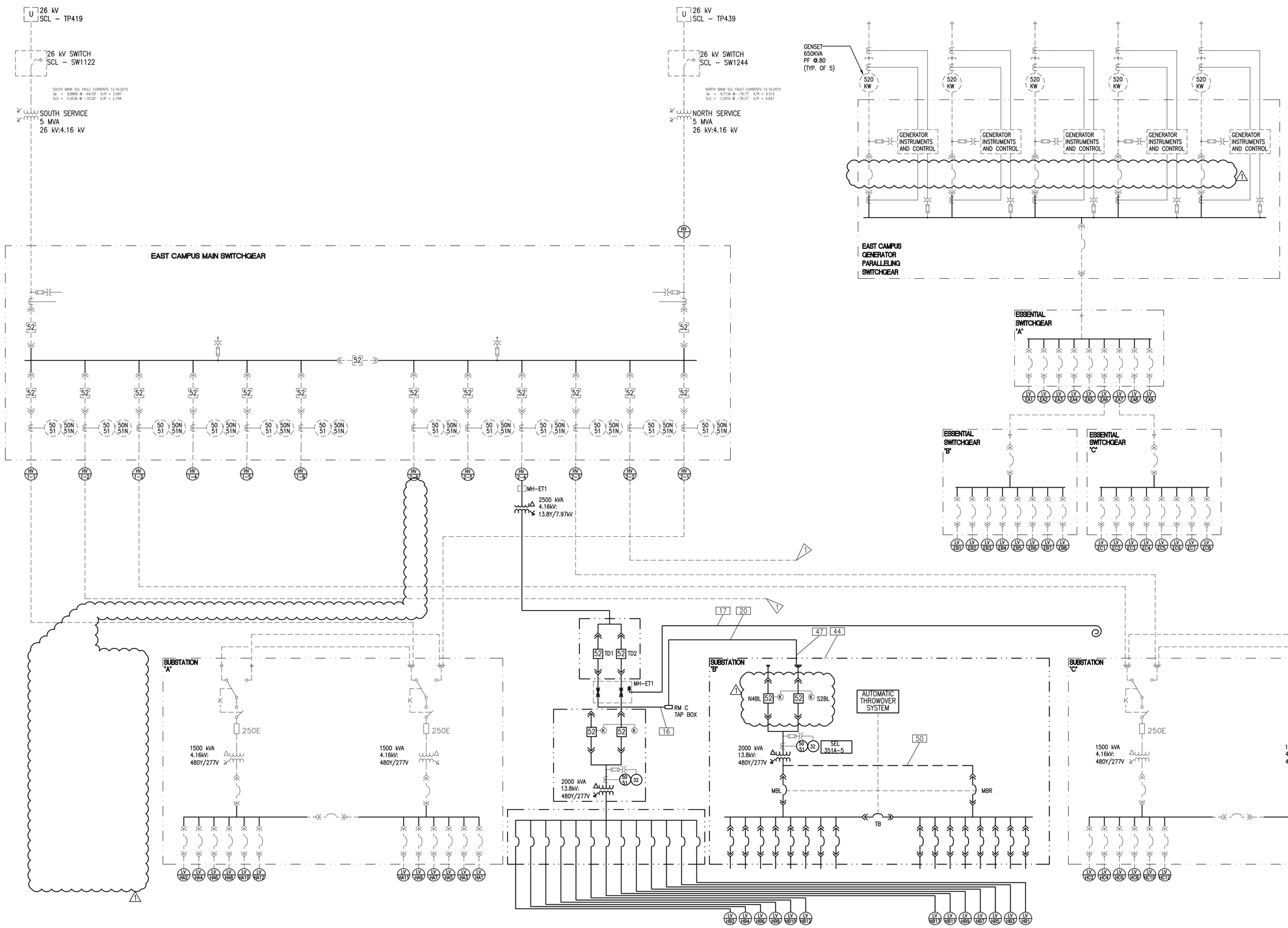

GENERAL NOTES:

1. SEE SHEETS ES800 AND ES801 FOR FEEDER SCHEDULES.
2. ALL 15KV BREAKERS SHALL BE THE SAME MAKE AND MODEL, INTERCHANGEABLE TO ANY POSITION.

CONSTRUCTION NOTES:

1. DEAD END NEAR UNIT SUBSTATION.

NOTES:

TASK IDENTIFICATION – SEE SEQUENCE OF CONSTRUCTION ON SHEETS ES003, ES004 AND ES005.

16 | 17 | 20 | 44 | 47 | 50

AMENDMENT DRAWING

SUPERSEDES 100-EP601T2

Revisions	Date
REVISION 1	04-01-16
–	–
–	–
–	–
–	–
–	–
–	–
–	–
–	–
–	–

CONSULTANTS:

SÄZÄN GROUP
600 Stewart St., Ste 1400
Seattle, Washington 98101
Tel 206.267.1700
Fax 206.267.1701
SAZAN # 269-1507

Drawing Title: PRIMARY DISTRIBUTION - ONE LINE - TEMPORARY #2

Approved Project Director: – – VAPAHCS PLANNING AND ENGINEERING

Project Title: VA PUGET SOUND HEALTH CARE SYSTEM UPGRADE SEATTLE ELECTRICAL DISTRIBUTION FROM 5kV TO 15kV

Location: 1660 South Columbian Way, Seattle, WA 98108

Date: 02-25-2016 | Checked: K.ANDERSON | Drawn: A.WOOLF

Project Number: 663-15-102

Building Number: 100

Drawing Number: 100-EP601T2R

Dwg. -- of --

Office of Construction and Facilities Management

Department of Veterans Affairs

VA FORM 08-6231

one eighth inch = one foot | one quarter inch = one foot | three eighths inch = one foot | one half inch = one foot | three quarters inch = one foot | one inch = one foot | one and one half inches = one foot | three inches = one foot
P:\269-1507 VAMC Seattle 5kV to 15kV Upgrade\DWG\ELEC\100-EP601T2.dwg 3-30-16 10:54:33 AM cpeters

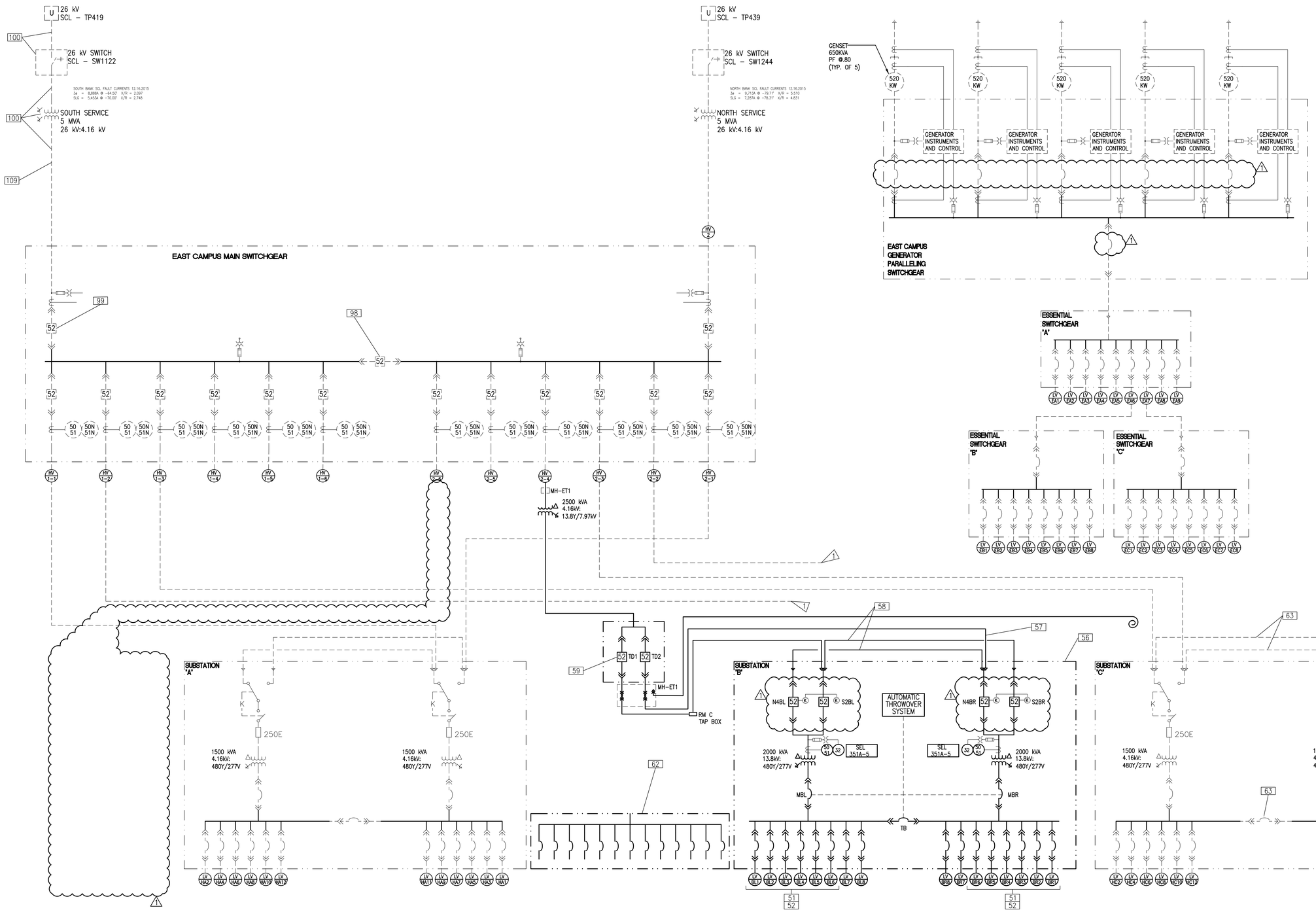

GENERAL NOTES:

1. SEE SHEETS ES800 AND ES801 FOR FEEDER SCHEDULES.
2. ALL 15KV BREAKERS SHALL BE THE SAME MAKE AND MODEL, INTERCHANGEABLE TO ANY POSITION.

CONSTRUCTION NOTES:

1 DEAD END NEAR UNIT SUBSTATION.

NOTES:

TASK IDENTIFICATION – SEE SEQUENCE OF CONSTRUCTION ON SHEET ES003 AND ES004.

51 52 56 57 58 59
62 63 64 98 99 100 109

AMENDMENT DRAWING

SUPERSEDES 100-EP601T3

–	–
–	–
–	–
–	–
–	–
–	–
–	–
–	–
REVISION 1	04-01-16
Revisions:	Date

CONSULTANTS:

SAZAN GROUP
600 Stewart St., Ste 1400
Seattle, Washington 98101
Tel 206.267.1700
Fax 206.267.1701
SAZAN # 269-1507

Drawing Title: PRIMARY DISTRIBUTION - ONE LINE - TEMPORARY #3

Approved Project Director: – – VAPAHCS PLANNING AND ENGINEERING

Project Title: VA PUGET SOUND HEALTH CARE SYSTEM UPGRADE SEATTLE ELECTRICAL DISTRIBUTION FROM 5kV TO 15kV

Location: 1660 South Columbian Way, Seattle, WA 98108

Date: 02-25-2016 | Checked: K.ANDERSON | Drawn: A.WOOLF

Project Number: 663-15-102

Building Number: 100

Drawing Number: 100-EP601T3R

Dwg. -- of --

Office of Construction and Facilities Management

Department of Veterans Affairs

VA FORM 08-6231

P:\269-1507 VAMC Seattle 5kV to 15kV Upgrade\DWG\ELEC\100-EP601T3.dwg 3-30-16 10:54:42 AM cpeters

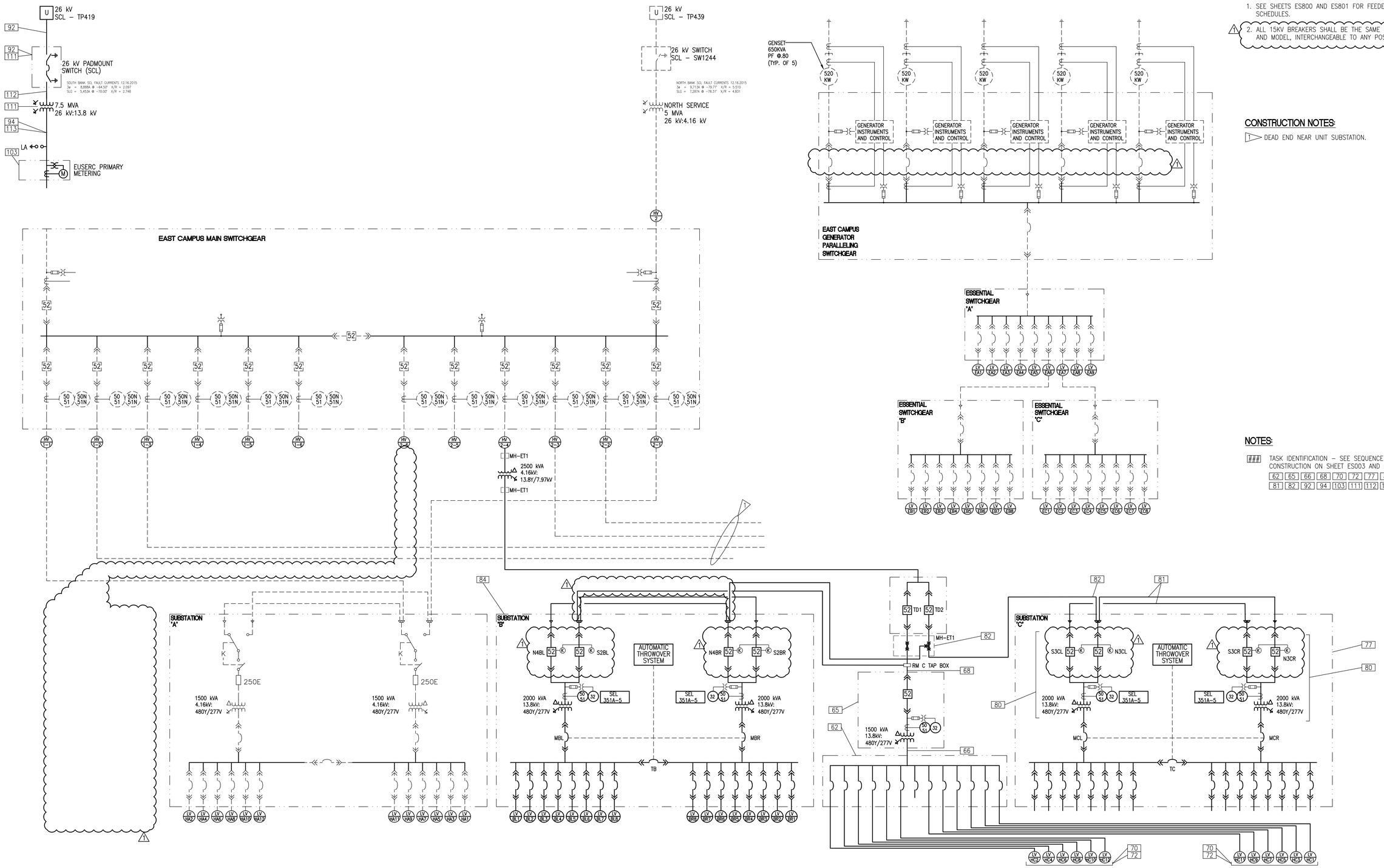

GENERAL NOTES:

1. SEE SHEETS ES800 AND ES801 FOR FEEDER SCHEDULES.
2. ALL 15KV BREAKERS SHALL BE THE SAME MAKE AND MODEL, INTERCHANGEABLE TO ANY POSITION.

CONSTRUCTION NOTES:

1. DEAD END NEAR UNIT SUBSTATION.

NOTES:

TASK IDENTIFICATION – SEE SEQUENCE OF CONSTRUCTION ON SHEET ES003 AND ES004.

62 65 66 68 70 72 77 80
81 82 92 94 103 111 112 113

AMENDMENT DRAWING

SUPERSEDES 100-EP601T4

REVISION 1	04-01-16
Revisions	Date

CONSULTANTS:

SĀZĀN GROUP
600 Stewart St., Ste 1400
Seattle, Washington 98101
Tel 206.267.1700
Fax 206.267.1701
SAZAN # 269-1507

Drawing Title: PRIMARY DISTRIBUTION - ONE LINE - TEMPORARY #4

Approved Project Director: - - VAPAHCS PLANNING AND ENGINEERING

Project Title: VA PUGET SOUND HEALTH CARE SYSTEM UPGRADE SEATTLE ELECTRICAL DISTRIBUTION FROM 5kV TO 15kV

Location: 1660 South Columbian Way, Seattle, WA 98108

Date: 02-25-2016 | Checked: K.ANDERSON | Drawn: A.WOOLF

Project Number: 663-15-102

Building Number: 100

Drawing Number: 100-EP601T4R

Dwg. -- of --

Office of Construction and Facilities Management

Department of Veterans Affairs

VA FORM 08-6231

PA\269-1507 VAMC Seattle 5kV to 15kV Upgrade\DWG\ELEC\100-EP601T4.dwg 3-30-16 10:54:52 AM cpeters

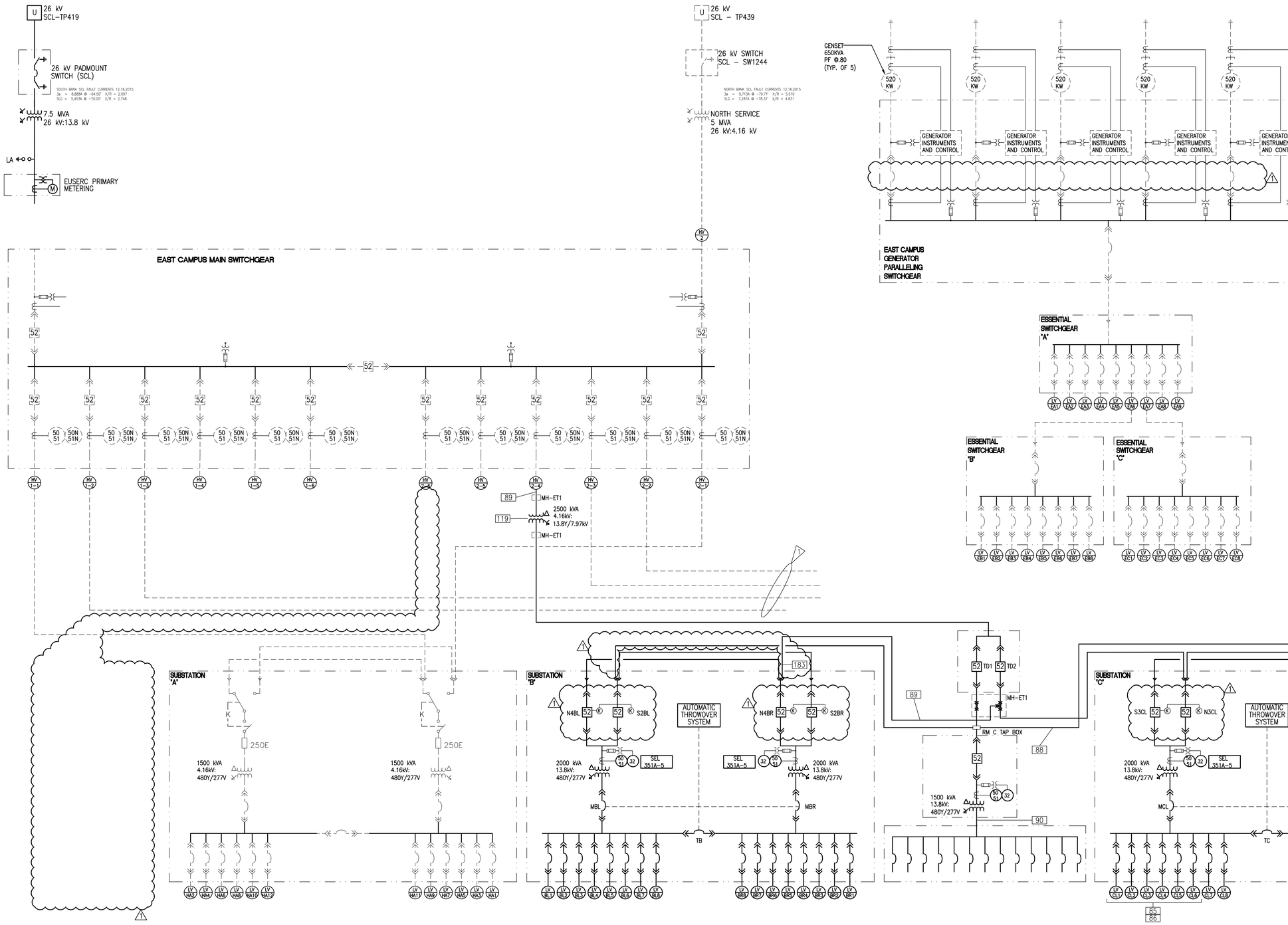

GENERAL NOTES:

1. SEE SHEETS ES800 AND ES801 FOR FEEDER SCHEDULES.
2. ALL 15KV BREAKERS SHALL BE THE SAME MAKE AND MODEL, INTERCHANGEABLE TO ANY POSITION.

CONSTRUCTION NOTES:

1 DEAD END NEAR UNIT SUBSTATION.

NOTES:

TASK IDENTIFICATION – SEE SEQUENCE OF CONSTRUCTION ON SHEET ES003 AND ES004.

85 86 88 89 90 119 183

AMENDMENT DRAWING

SUPERSEDES 100-EP601T5

-	-
-	-
-	-
-	-
-	-
-	-
-	-
-	-
REVISION 1	04-01-16
Revisions	Date

CONSULTANTS:

SĀZĀN GROUP
600 Stewart St., Ste 1400
Seattle, Washington 98101
Tel 206.267.1700
Fax 206.267.1701
SAZAN # 269-1507

Drawing Title: PRIMARY DISTRIBUTION - ONE LINE - TEMPORARY #5

Approved Project Director: - - VAPAHCS PLANNING AND ENGINEERING

Project Title: VA PUGET SOUND HEALTH CARE SYSTEM UPGRADE SEATTLE ELECTRICAL DISTRIBUTION FROM 5kV TO 15kV

Location: 1660 South Columbian Way, Seattle, WA 98108

Date: 02-25-2016 | Checked: K.ANDERSON | Drawn: A.WOOLF

Project Number: 663-15-102

Building Number: 100

Drawing Number: 100-EP601T5R

Dwg. -- of --

Office of Construction and Facilities Management

Department of Veterans Affairs

VA FORM 08-6231

P:\269-1507 VAMC Seattle 5kV to 15kV Upgrade\DWG\ELEC\100-EP601T5.dwg 3-30-16 10:55:02 AM cpeters

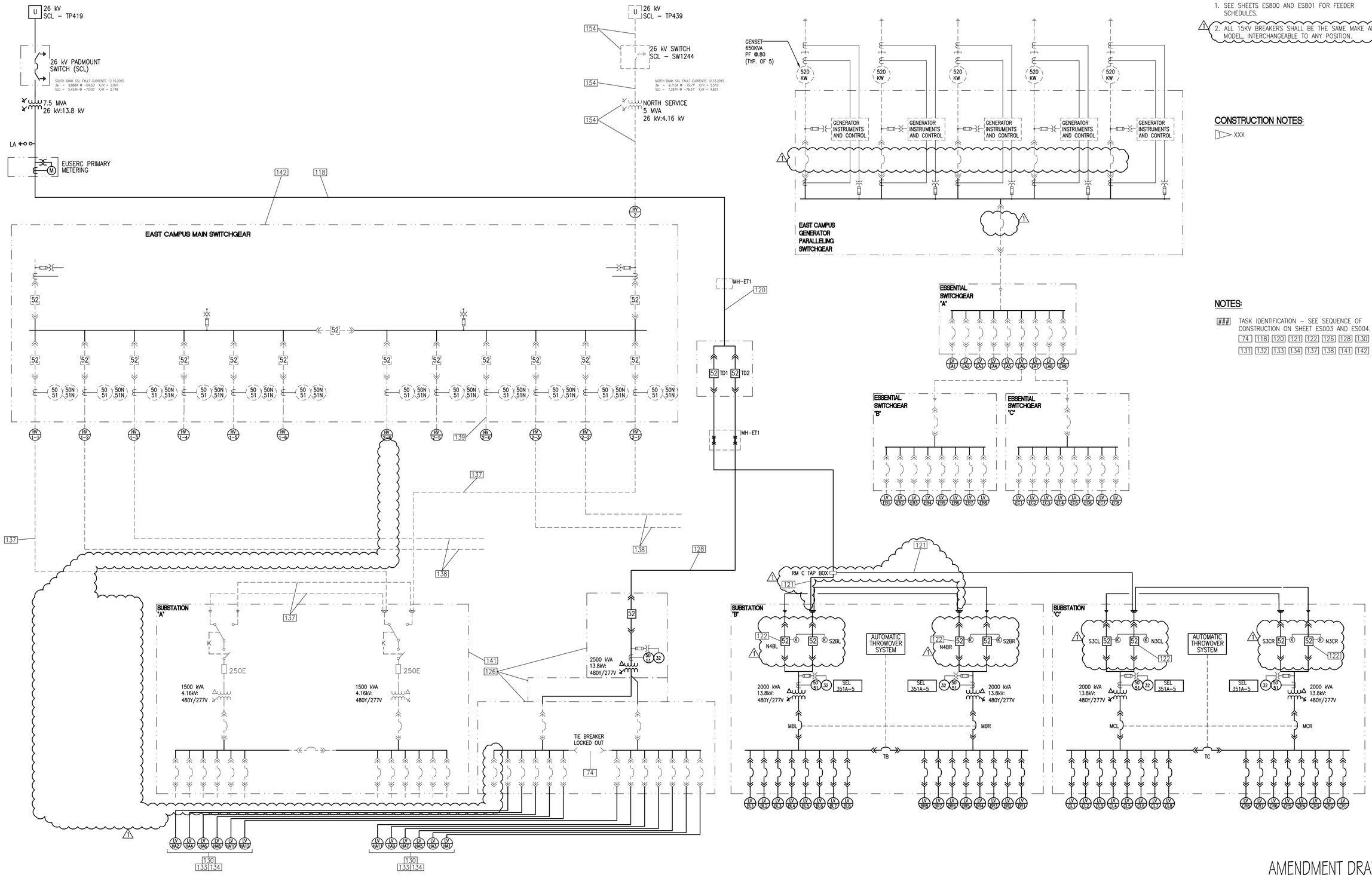

GENERAL NOTES:

1. SEE SHEETS ES800 AND ES801 FOR FEEDER SCHEDULES.
2. ALL 15KV BREAKERS SHALL BE THE SAME MAKE AND MODEL, INTERCHANGEABLE TO ANY POSITION.

CONSTRUCTION NOTES:

1 XXX

NOTES:

TASK IDENTIFICATION – SEE SEQUENCE OF CONSTRUCTION ON SHEET ES003 AND ES004.

74 118 120 121 122 126 128 130
131 132 133 134 137 138 141 142

AMENDMENT DRAWING

SUPERSEDES 100-EP601T6

REVISION 1	04-01-16
Revisions:	Date

CONSULTANTS:

SAZAN GROUP
600 Stewart St., Ste 1400
Seattle, Washington 98101
Tel 206.267.1700
Fax 206.267.1701
SAZAN # 269-1507

Drawing Title: PRIMARY DISTRIBUTION - ONE LINE - TEMPORARY #6

Approved: Project Director
–
–
VAPAHCS PLANNING AND ENGINEERING

Project Title: VA PUGET SOUND HEALTH CARE SYSTEM UPGRADE SEATTLE ELECTRICAL DISTRIBUTION FROM 5kV TO 15kV

Location: 1660 South Columbian Way, Seattle, WA 98108

Date: 02-25-2016 | Checked: K.ANDERSON | Drawn: A.WOOLF

Project Number: 663-15-102

Building Number: 100

Drawing Number: 100-EP601T6R

Dwg. -- of --

Office of Construction and Facilities Management

Department of Veterans Affairs

VA FORM 08-6231

P:\269-1507 VAMC Seattle 5kV to 15kV Upgrade\DWG\ELEC\100-EP601T6.dwg 3-30-16 10:55:13 AM cpeters

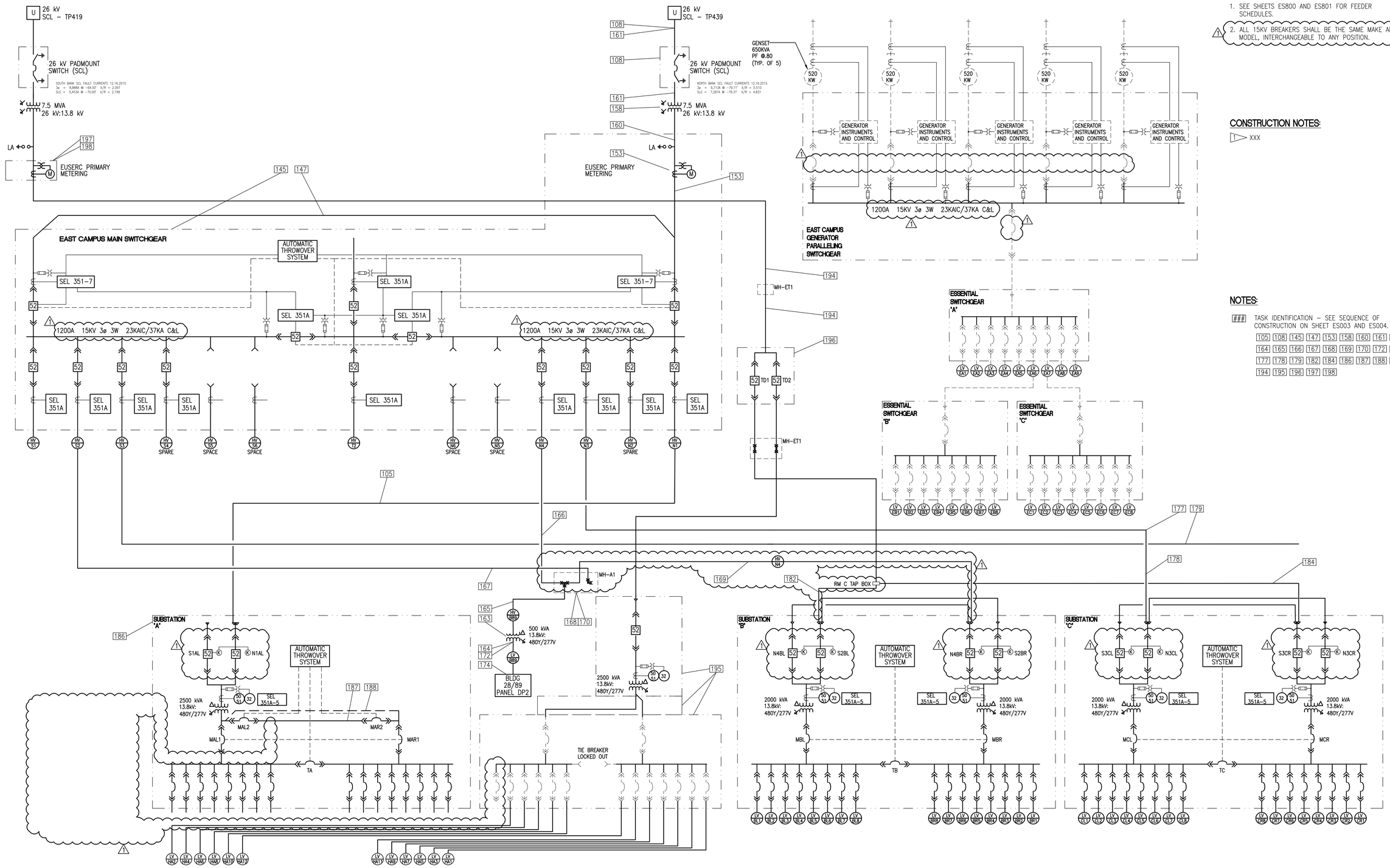

GENERAL NOTES:

1. SEE SHEETS ES800 AND ES801 FOR FEEDER SCHEDULES.
2. ALL 15KV BREAKERS SHALL BE THE SAME MAKE AND MODEL, INTERCHANGEABLE TO ANY POSITION.

CONSTRUCTION NOTES:

1 XXX

NOTES:

TASK IDENTIFICATION – SEE SEQUENCE OF CONSTRUCTION ON SHEET ES003 AND ES004.

105 108 145 147 153 158 160 161 163
164 165 166 167 168 169 170 172 174
177 178 179 182 184 186 187 188 192
194 195 196 197 198

AMENDMENT DRAWING

SUPERSEDES 100-EP601T7

REVISION 1	04-01-16
Revisions:	Date

CONSULTANTS:

SAZAN GROUP
600 Stewart St., Ste 1400
Seattle, Washington 98101
Tel 206.267.1700
Fax 206.267.1701
SAZAN # 269-1507

Drawing Title: PRIMARY DISTRIBUTION - ONE LINE - TEMPORARY #7

Approved Project Director: - - VAPAHCS PLANNING AND ENGINEERING

Project Title: VA PUGET SOUND HEALTH CARE SYSTEM UPGRADE SEATTLE ELECTRICAL DISTRIBUTION FROM 5kV TO 15kV

Location: 1660 South Columbian Way, Seattle, WA 98108

Date: 02-25-2016 | Checked: K.ANDERSON | Drawn: A.WOOLF

Project Number: 663-15-102

Building Number: 100

Drawing Number: 100-EP601T7R

Dwg. -- of --

Office of Construction and Facilities Management

Department of Veterans Affairs

VA FORM 08-6231

P:\269-1507 VAMC Seattle 5kV to 15kV Upgrade\DWG\ELEC\100-EP601T7.dwg 3-30-16 10:35:22 AM cpeters

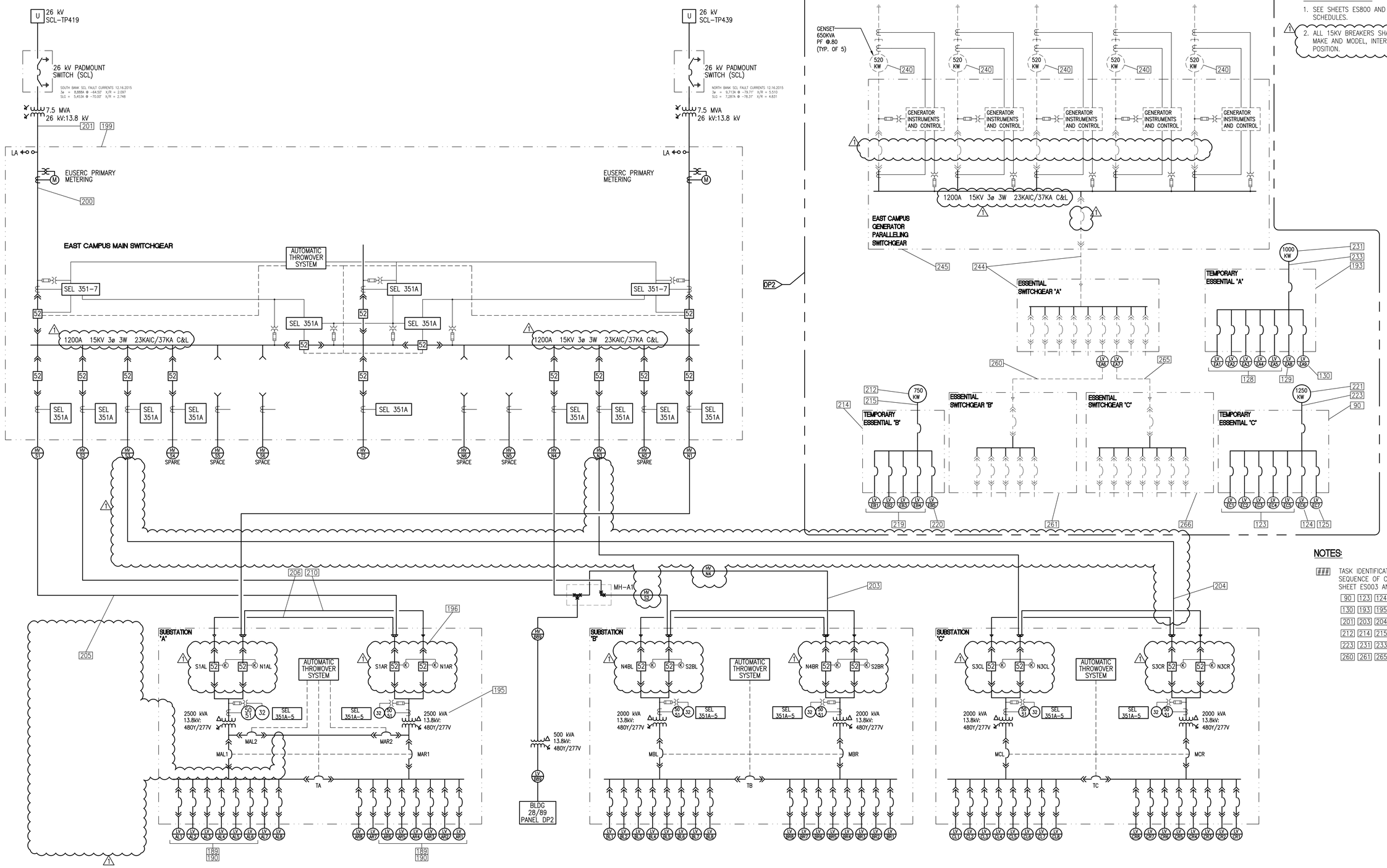

GENERAL NOTES:

1. SEE SHEETS ES800 AND ES801 FOR FEEDER SCHEDULES.
2. ALL 15KV BREAKERS SHALL BE THE SAME MAKE AND MODEL, INTERCHANGEABLE TO ANY POSITION.

NOTES:

TASK IDENTIFICATION – SEE SEQUENCE OF CONSTRUCTION ON SHEET ES003 AND ES004.

90 123 124 125 128 129 130 193 195 196 199 200 201 203 204 205 206 210 212 214 215 219 220 221 223 231 233 240 244 245 260 261 265 266

AMENDMENT DRAWING

SUPERSEDES 100-EP601T8

-	-
-	-
-	-
-	-
-	-
-	-
-	-
-	-
REVISION 1	04-01-16
Revisions:	Date

CONSULTANTS:

SAZAN GROUP
600 Stewart St., Ste 1400
Seattle, Washington 98101
Tel 206.267.1700
Fax 206.267.1701
SAZAN # 269-1507

Drawing Title: PRIMARY DISTRIBUTION - ONE LINE - TEMPORARY #8

Approved Project Director: - - VAPAHCS PLANNING AND ENGINEERING

Project Title: VA PUGET SOUND HEALTH CARE SYSTEM UPGRADE SEATTLE ELECTRICAL DISTRIBUTION FROM 5kV TO 15kV

Location: 1660 South Columbian Way, Seattle, WA 98108

Date: 02-25-2016 | Checked: K.ANDERSON | Drawn: A.WOOLF

Project Number: 663-15-102

Building Number: 100

Drawing Number: 100-EP601T8R

Dwg. -- of --

Office of Construction and Facilities Management

Department of Veterans Affairs

VA FORM 08-6231

P:\269-1507 VAMC Seattle 5kV to 15kV Upgrade\DWG\ELEC\100-EP601T8.dwg 3-30-16 10:55:32 AM cpeters

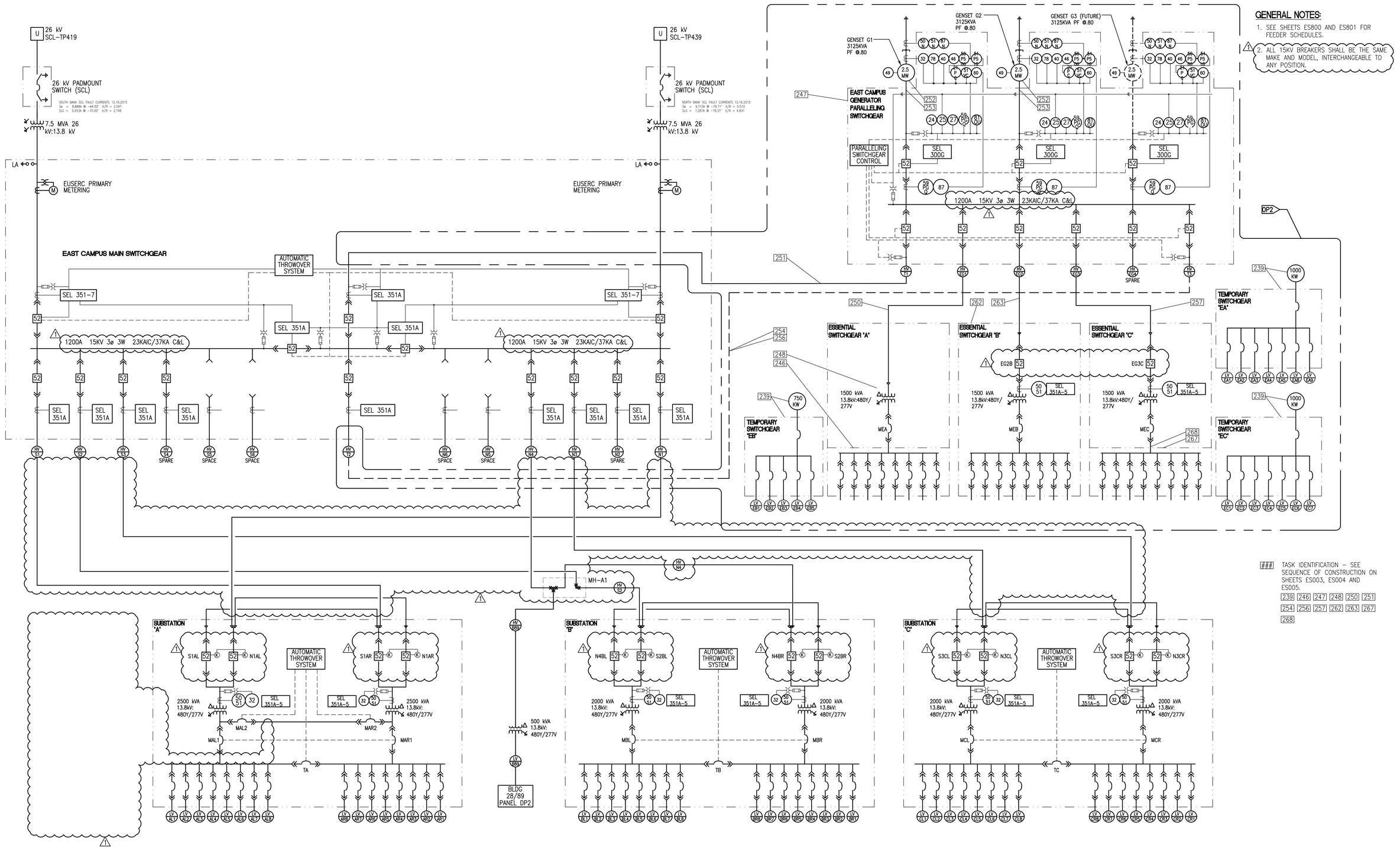

GENERAL NOTES:

1. SEE SHEETS ES800 AND ES801 FOR FEEDER SCHEDULES.
2. ALL 15KV BREAKERS SHALL BE THE SAME MAKE AND MODEL, INTERCHANGEABLE TO ANY POSITION.

TASK IDENTIFICATION – SEE SEQUENCE OF CONSTRUCTION ON SHEETS ES003, ES004 AND ES005.

239 246 247 248 250 251 254 256 257 262 263 267 268

AMENDMENT DRAWING

SUPERSEDES 100-EP601T9

REVISION 1	04-01-16
Revisions:	Date

CONSULTANTS:

SAZAN GROUP
600 Stewart St., Ste 1400
Seattle, Washington 98101
Tel 206.267.1700
Fax 206.267.1701
SAZAN # 269-1507

Drawing Title: PRIMARY DISTRIBUTION - ONE LINE - TEMPORARY #9

Approved Project Director: - - VAPAHCS PLANNING AND ENGINEERING

Project Title: VA PUGET SOUND HEALTH CARE SYSTEM UPGRADE SEATTLE ELECTRICAL DISTRIBUTION FROM 5kV TO 15kV

Location: 1660 South Columbian Way, Seattle, WA 98108

Date: 02-25-2016 | Checked: K.ANDERSON | Drawn: A.WOOLF

Project Number: 663-15-102

Building Number: 100

Drawing Number: 100-EP601T9R

Dwg. -- of --

Office of Construction and Facilities Management

Department of Veterans Affairs

VA FORM 08-6231

P:\269-1507 VAMC Seattle 5kV to 15kV Upgrade\DWG\ELEC\100-EP601T9.dwg 3-30-16 10:55:43 AM cpeters

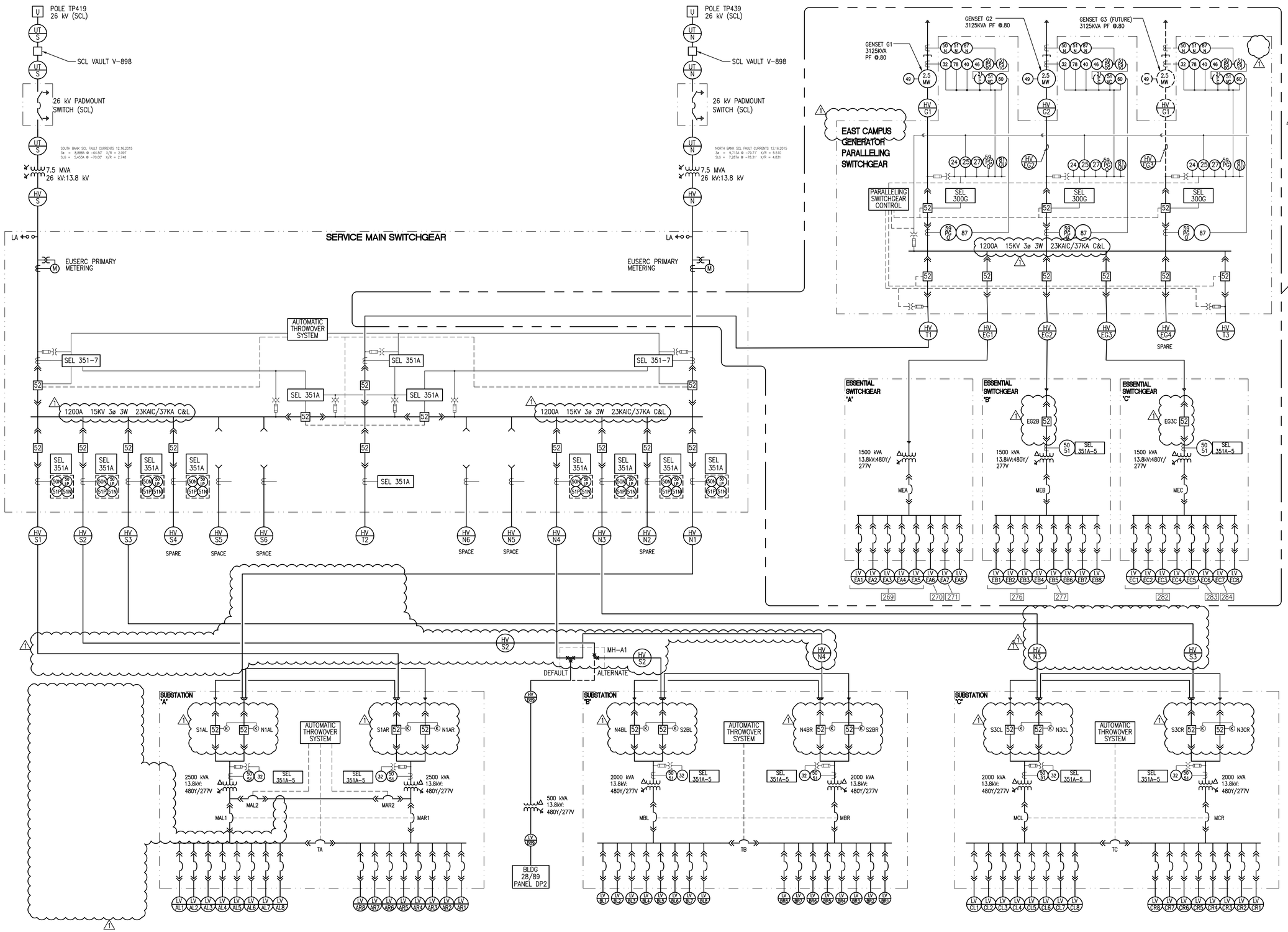

GENERAL NOTES:

1. 15KV FEEDER TAP TO BUILDING 28/89 MAY BE CONNECTED TO EITHER SUBSTATION 'B' FEEDER IN MANHOLE MH-A1. DEFAULT FEEDER IS N4.
2. SEE SHEETS ES800 AND ES801 FOR FEEDER SCHEDULES.
3. REFER TO ES601 FOR 15KV CAMPUS DISTRIBUTION.
4. ALL 15KV BREAKERS SHALL BE THE SAME MAKE AND MODEL, INTERCHANGEABLE TO ANY POSITION.

INTERTIE FEEDERS

- HV T1 — EAST MAIN TO EAST GENERATOR
- HV T2 — EAST MAIN TO WEST MAIN
- HV T3 — EAST MAIN TO WEST GENERATOR

TASK IDENTIFICATION – SEE SEQUENCE OF CONSTRUCTION ON SHEETS ES003, ES004 AND ES005.

269 270 271 276 277 282 283 284

AMENDMENT DRAWING

SUPERSEDES 100-EP601

-	-
-	-
-	-
-	-
-	-
-	-
-	-
-	-
REVISION 1	04-01-16
Revisions:	Date

CONSULTANTS:

SAZAN GROUP
600 Stewart St., Ste 1400
Seattle, Washington 98101
Tel 206.267.1700
Fax 206.267.1701
SAZAN # 269-1507

Drawing Title: PRIMARY DISTRIBUTION - ONE LINE EAST CAMPUS

Approved: Project Director
-
-
VAPAHCS PLANNING AND ENGINEERING

Project Title: VA PUGET SOUND HEALTH CARE SYSTEM UPGRADE SEATTLE ELECTRICAL DISTRIBUTION FROM 5kV TO 15kV

Location: 1660 South Columbian Way, Seattle, WA 98108

Date	Checked	Drawn
02-25-2016	K.ANDERSON	A.WOOLF

Project Number: 663-15-102

Building Number: 100

Drawing Number: 100-EP601R

Dwg. -- of --

Office of Construction and Facilities Management

Department of Veterans Affairs

VA FORM 08-6231

P:\269-1507 VAMC Seattle 5kV to 15kV Upgrade\DWG\ELEC\100-EP601.dwg 3-30-16 10:55:54 AM cpeters