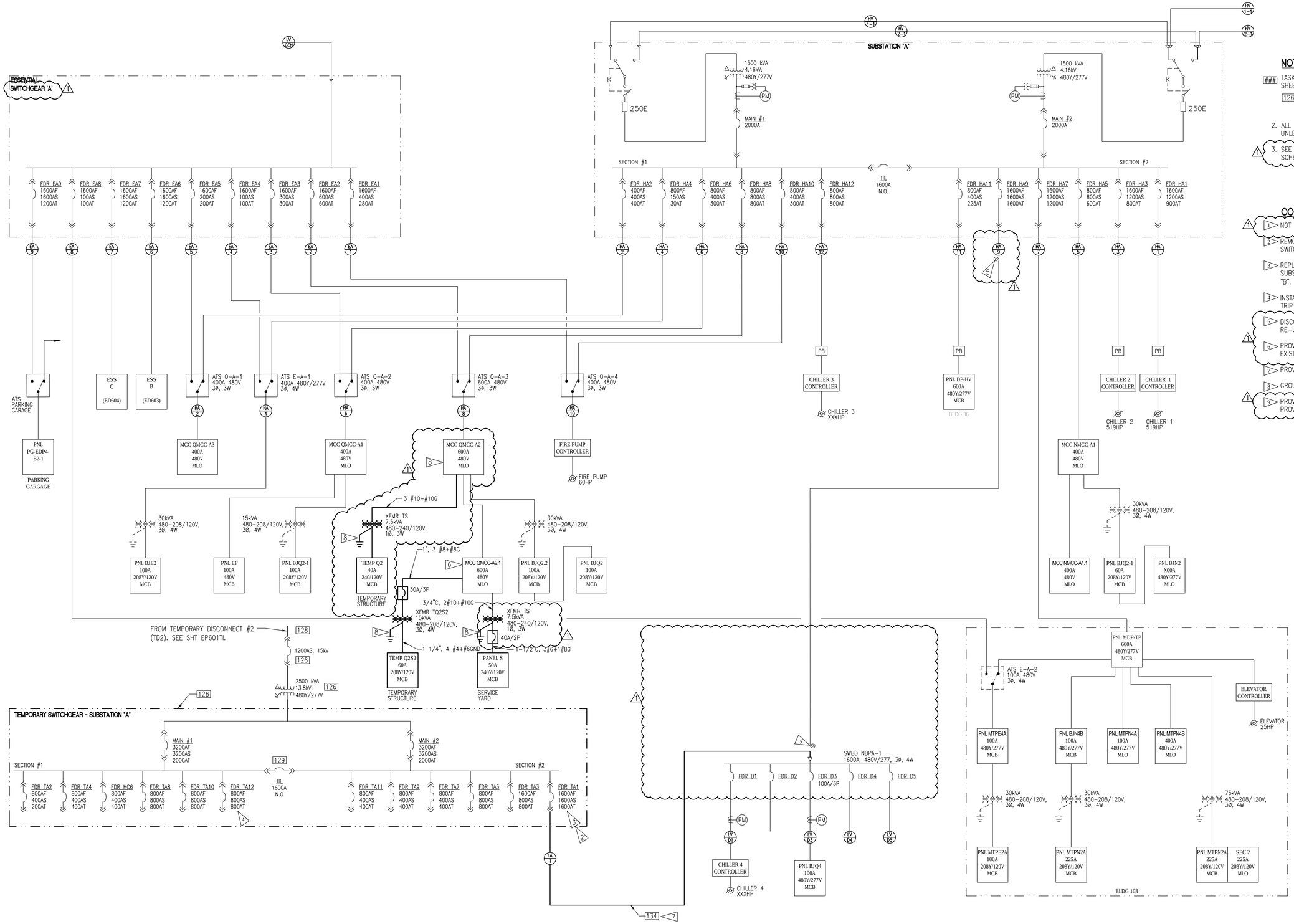

NOTES:

1. TASK IDENTIFICATION – SEE SEQUENCE OF CONSTRUCTION ON SHEETS ES004 & ES005.
   126 128 129 131 132
2. ALL TEMPORARY POWER FEEDERS SHALL BE MC CABLE TYPE UNLESS OTHERWISE NOTED.
3. SEE SHEETS ES800 AND ES801 FOR FEEDER SCHEDULES.

CONSTRUCTION NOTES:

1. NOT USED.
2. REMOVE SENSOR AND PLUG TRIP UNIT AND INSTALL IN SWITCH POSITION HC12.
3. REPLACE SENSOR MODULE WITH EXISTING FROM SUBSTATION "B". PROVIDE PLUG TRIP UNIT RATING SIZE AS SHOWN.
4. INSTALL PREVIOUSLY REMOVE 800A SENSOR AND PLUG TRIP SEE CONSTRUCTION NOTE 1.
5. DISCONNECT EXISTING CONDUCTORS AND COIL FOR RE-USE.
6. PROVIDE 30A-3P AND 20A-2P CIRCUIT BREAKERS IN EXISTING MCC. PROVIDE COVER WITH OPERATING HANDLES.
7. PROVIDE FEEDER PER SHEET ES800 OR ES801.
8. GROUND PER NFPA 70, ART. 250.
9. PROVIDE 20A-2P CIRCUIT BREAKERS IN EXISTING MCC. PROVIDE COVER WITH OPERATING HANDLE.

AMENDMENT DRAWING

SUPERSEDES 100-EP602T1

-	-
-	-
-	-
-	-
-	-
-	-
-	-
-	-
REVISION 1	04-01-16
Revisions:	Date

CONSULTANTS:

SAZAN GROUP
600 Stewart St., Ste 1400
Seattle, Washington 98101
Tel 206.267.1700
Fax 206.267.1701
SAZAN # 269-1507

Drawing Title: SECONDARY DISTRIBUTION - ONE LINE - TEMPORARY #1

Approved Project Director: - - VAPAHCS PLANNING AND ENGINEERING

Project Title: VA PUGET SOUND HEALTH CARE SYSTEM UPGRADE SEATTLE ELECTRICAL DISTRIBUTION FROM 5kV TO 15kV

Location: 1660 South Columbian Way, Seattle, WA 98108

Date: 02-25-2016 | Checked: K.ANDERSON | Drawn: A.WOOLF

Project Number: 663-15-102

Building Number: 100

Drawing Number: 100-EP602T1R

Dwg. -- of --

Office of Construction and Facilities Management

Department of Veterans Affairs

VA FORM 08-6231

PLV269-1507 VAMC Seattle 5kV to 15kV Upgrade\DWG\ELEC\100-EP602T1.dwg 3-30-16 10:56:05 AM cpeters

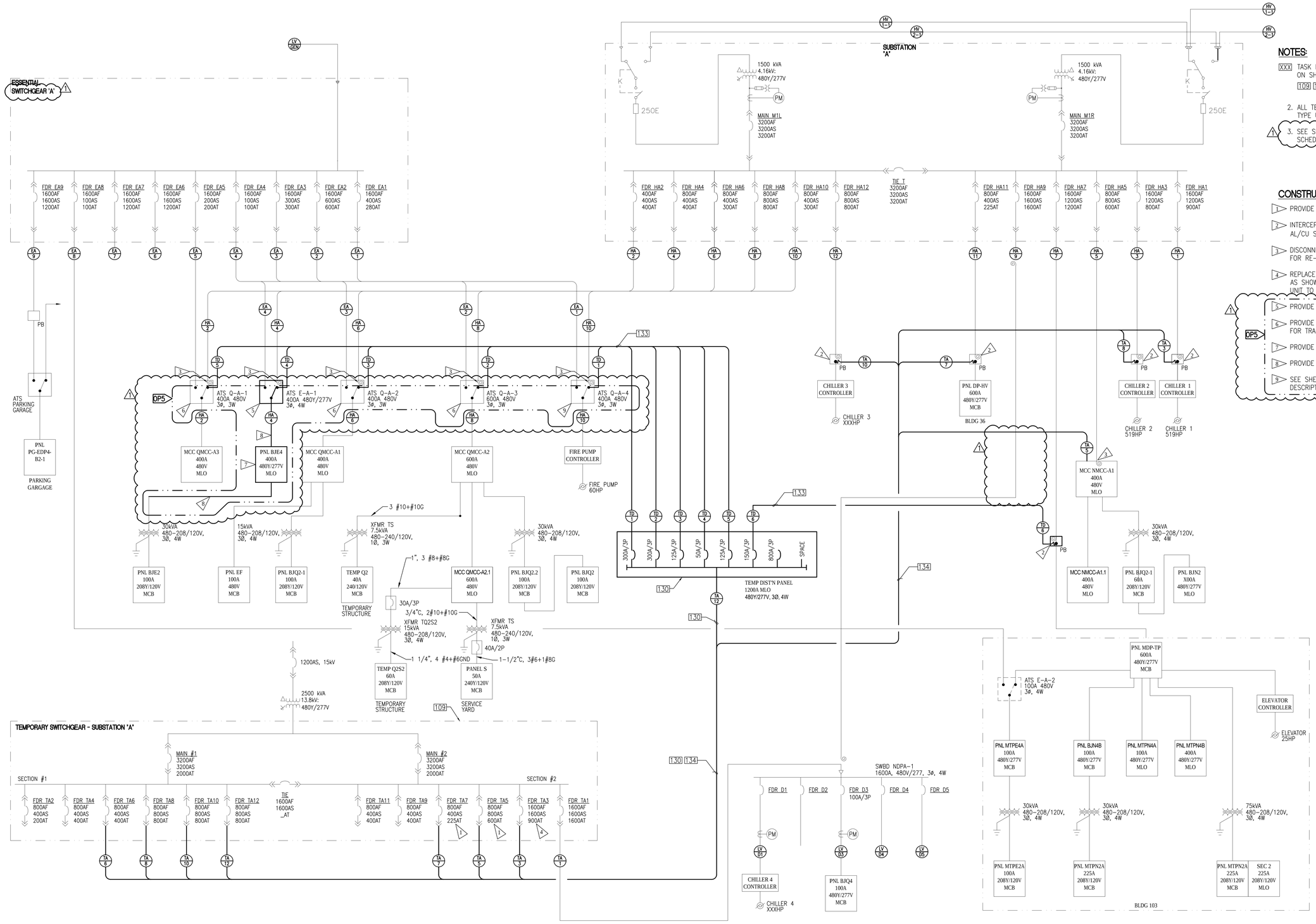

NOTES:

XXX TASK IDENTIFICATION – SEE SEQUENCE OF CONSTRUCTION ON SHEETS ES004 & ES005.
109 130 133 134

2. ALL TEMPORARY POWER FEEDERS SHALL BE MC CABLE TYPE UNLESS OTHERWISE NOTED.

1 3. SEE SHEETS ES800 AND ES801 FOR FEEDER SCHEDULES.

CONSTRUCTION NOTES:

1 PROVIDE PLUG TRIP UNIT RATING SIZE AS SHOWN.

2 INTERCEPT EXISTING FEEDER. PROVIDE DUAL RATED, AL/CU SPLICE KIT.

3 DISCONNECT EXISTING FEEDER CONDUCTORS. MAKE SAFE FOR RE-USE.

4 REPLACE SENSOR AND PLUG TRIP UNIT WITH NEW SIZE AS SHOWN. RETURN REMOVED SENSOR AND PLUG TRIP UNIT TO VA.

1 OP5
5 PROVIDE NEW BYPASS ISOLATION TRANSFER SWITCH.
6 PROVIDE NEW INTERIOR ASSEMBLY AND FRONT COVER FOR TRANSFER SWITCH
7 PROVIDE NEW PANEL.
8 PROVIDE NEW FEEDER.
9 SEE SHEET 100-EP109T4 FOR ADDITIONAL WORK DESCRIPTION.

AMENDMENT DRAWING

SUPERSEDES 100-EP602T2

-	-
-	-
-	-
-	-
-	-
-	-
-	-
-	-
REVISION 1	04-01-16
Revisions:	Date

CONSULTANTS:

SĀZĀN GROUP
600 Stewart St., Ste 1400
Seattle, Washington 98101
Tel 206.267.1700
Fax 206.267.1701
SAZAN # 269-1507

Drawing Title: SECONDARY DISTRIBUTION - ONE LINE - TEMPORARY #2

Approved Project Director: - - VAPAHCS PLANNING AND ENGINEERING

Project Title: VA PUGET SOUND HEALTH CARE SYSTEM UPGRADE SEATTLE ELECTRICAL DISTRIBUTION FROM 5kV TO 15kV

Location: 1660 South Columbian Way, Seattle, WA 98108

Date: 02-25-2016 | Checked: K.ANDERSON | Drawn: A.WOOLF

Project Number: 663-15-102

Building Number: 100

Drawing Number: 100-EP602T2R

Dwg. -- of --

Office of Construction and Facilities Management

Department of Veterans Affairs

P:\269-1507 VAMC Seattle 5kV to 15kV Upgrade\DWG\ELEC\100-EP602T2.dwg 3-30-16 10:56:16 AM cpeters

VA FORM 08-6231

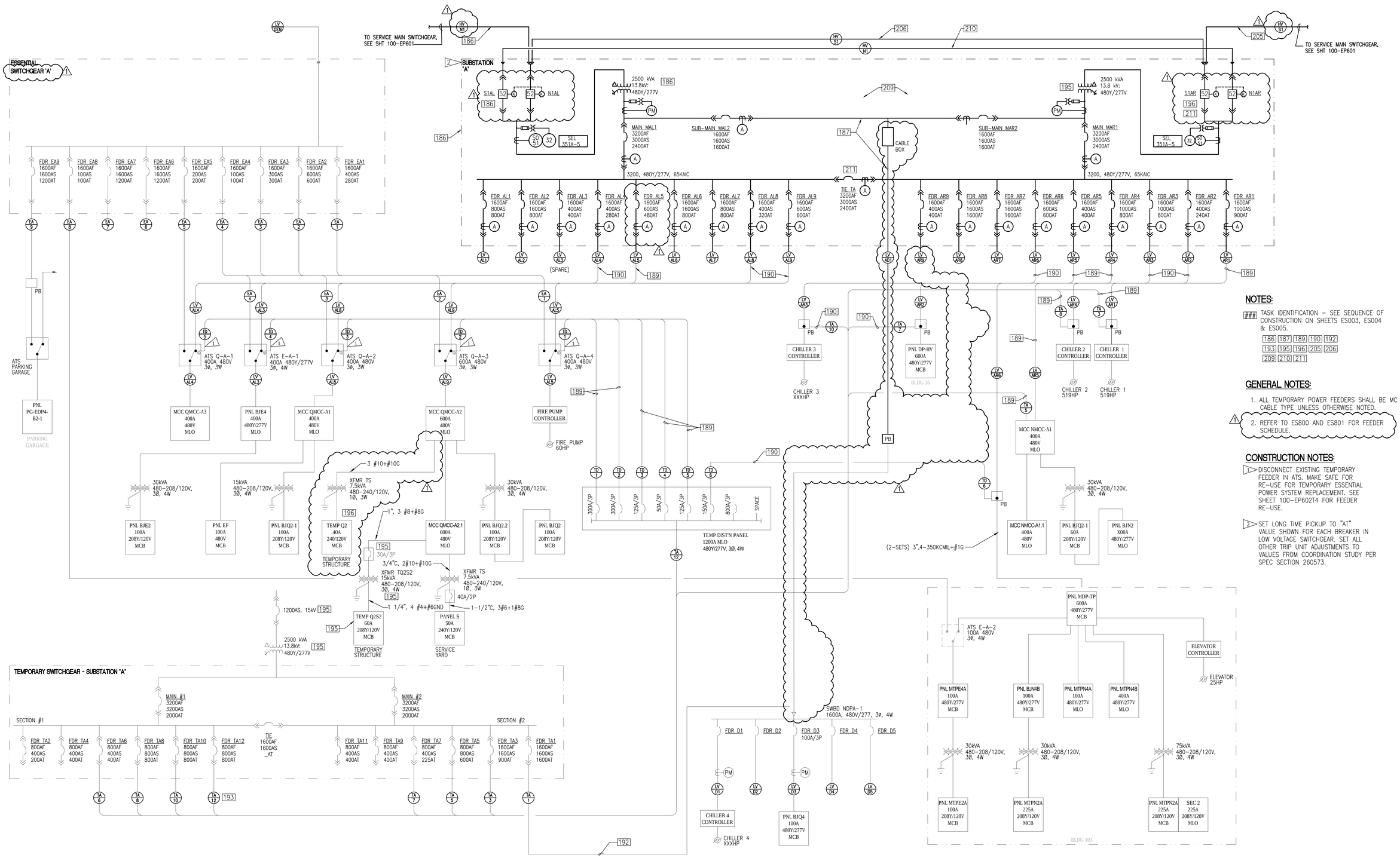

NOTES:

TASK IDENTIFICATION – SEE SEQUENCE OF CONSTRUCTION ON SHEETS ES003, ES004 & ES005.

186 187 189 190 192 193 195 196 205 206 209 210 211

GENERAL NOTES:

1. ALL TEMPORARY POWER FEEDERS SHALL BE MC CABLE TYPE UNLESS OTHERWISE NOTED.
2. REFER TO ES800 AND ES801 FOR FEEDER SCHEDULE.

CONSTRUCTION NOTES:

1. DISCONNECT EXISTING TEMPORARY FEEDER IN ATS. MAKE SAFE FOR RE-USE FOR TEMPORARY ESSENTIAL POWER SYSTEM REPLACEMENT. SEE SHEET 100-EP602T4 FOR FEEDER RE-USE.
2. SET LONG TIME PICKUP TO "AT" VALUE SHOWN FOR EACH BREAKER IN LOW VOLTAGE SWITCHGEAR. SET ALL OTHER TRIP UNIT ADJUSTMENTS TO VALUES FROM COORDINATION STUDY PER SPEC SECTION 260573.

AMENDMENT DRAWING

SUPERSEDES 100-EP602T3

Revisions:	Date
REVISION 1	04-01-16
-	-
-	-
-	-
-	-
-	-
-	-
-	-
-	-

CONSULTANTS:

SĀZĀN GROUP
600 Stewart St., Ste 1400
Seattle, Washington 98101
Tel 206.267.1700
Fax 206.267.1701
SAZAN # 269-1507

Drawing Title: SECONDARY DISTRIBUTION - ONE LINE - TEMPORARY #3

Approved Project Director: - - VAPAHCS PLANNING AND ENGINEERING

Project Title: VA PUGET SOUND HEALTH CARE SYSTEM UPGRADE SEATTLE ELECTRICAL DISTRIBUTION FROM 5kV TO 15kV

Location: 1660 South Columbian Way, Seattle, WA 98108

Date: 02-25-2016 | Checked: K.ANDERSON | Drawn: A.WOOLF

Project Number: 663-15-102

Building Number: 100

Drawing Number: 100-EP602T3R

Dwg. -- of --

Office of Construction and Facilities Management

Department of Veterans Affairs

VA FORM 08-6231

P:\269-1507 VAMC Seattle 5kV to 15kV Upgrade\DWG\ELEC\100-EP602T3.dwg 3-30-16 10:56:27 AM cpeters

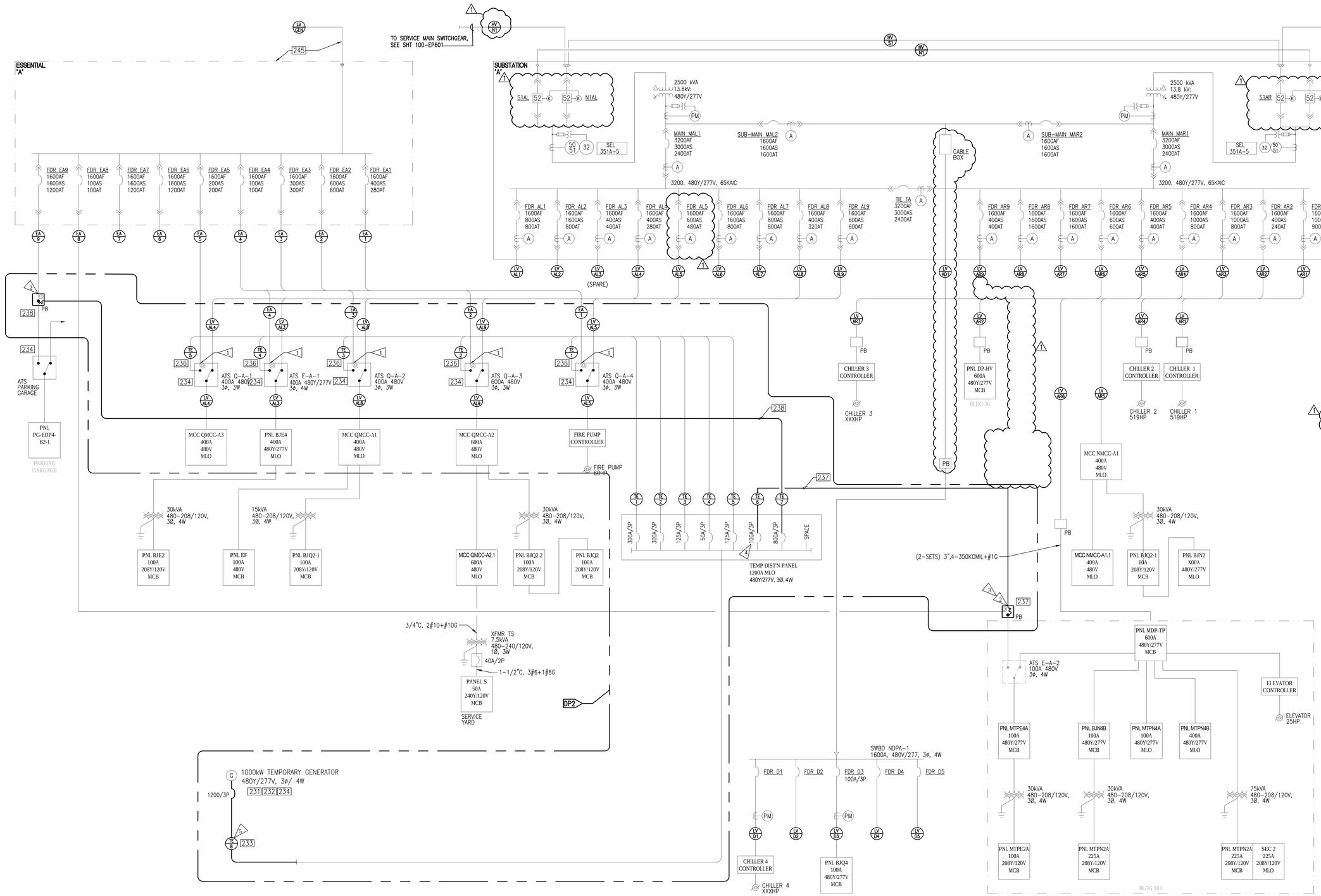

NOTES:

TASK IDENTIFICATION – SEE SEQUENCE OF CONSTRUCTION ON SHEETS ES004 & ES005.

231 232 233 234 236 237 238 245

GENERAL NOTES:

1. ALL TEMPORARY POWER FEEDERS SHALL BE MC CABLE TYPE UNLESS OTHERWISE NOTED.
2. REFER TO ES800 AND ES801 FOR FEEDER SCHEDULE.

CONSTRUCTION NOTES

1. DISCONNECT EXISTING FEEDER. MAKE SAFE FOR RE-USE.
2. INTERCEPT EXISTING FEEDER. PROVIDE DUAL RATED, AL/CU SPLICE KIT.
3. PROVIDE J-BOX.
4. PROVIDE CIRCUIT BREAKER SIZE AS SHOWN.
5. RECONNECT EXISTING TEMPORARY FEEDER TO GENERATOR.

AMENDMENT DRAWING

SUPERSEDES 100-EP602T4

Revisions	Date
-	-
-	-
-	-
-	-
-	-
-	-
-	-
-	-
REVISION 1	04-01-16

CONSULTANTS:

SÄZÄN GROUP
600 Stewart St., Ste 1400
Seattle, Washington 98101
Tel 206.267.1700
Fax 206.267.1701
SAZAN # 269-1507

Drawing Title: SECONDARY DISTRIBUTION - ONE LINE - TEMPORARY #4

Approved Project Director: - - VAPAHCS PLANNING AND ENGINEERING

Project Title: VA PUGET SOUND HEALTH CARE SYSTEM UPGRADE SEATTLE ELECTRICAL DISTRIBUTION FROM 5kV TO 15kV

Location: 1660 South Columbian Way, Seattle, WA 98108

Date: 02-25-2016 | Checked: K.ANDERSON | Drawn: A.WOOLF

Project Number: 663-15-102

Building Number: 100

Drawing Number: 100-EP602T4R

Dwg. -- of --

Office of Construction and Facilities Management

Department of Veterans Affairs

VA FORM 08-6231

P:\269-1507 VAMC Seattle 5kV to 15kV Upgrade\DWG\ELEC\100-EP602T4.dwg 3-30-16 10:56:37 AM cpeters

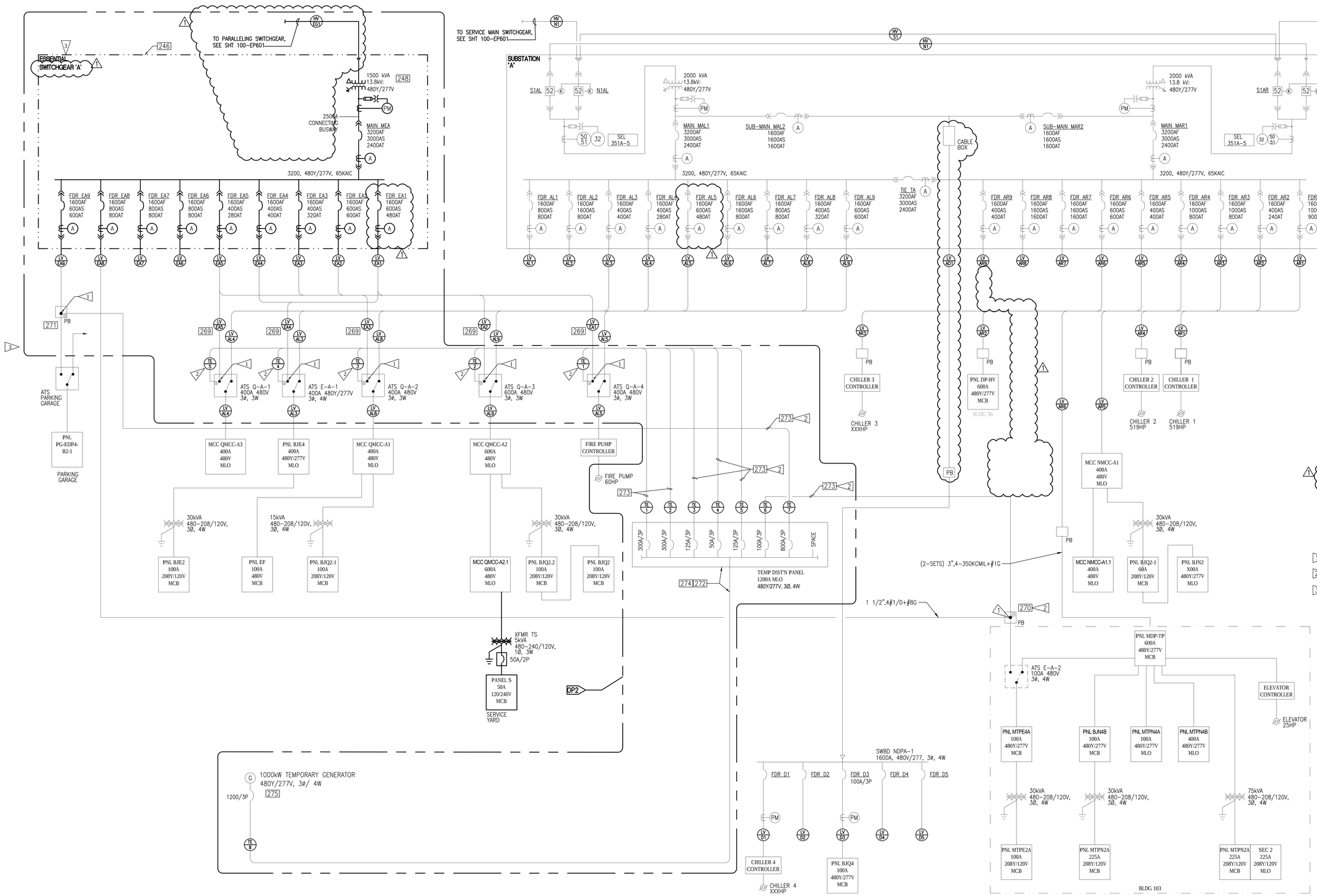

NOTES:

[###] TASK IDENTIFICATION – SEE SEQUENCE OF CONSTRUCTION ON SHEETS ES003, ES004 & ES005.
246 248 269 270 271 272 273 274 275

GENERAL NOTES:

1. ALL TEMPORARY POWER FEEDERS SHALL BE MC CABLE TYPE UNLESS OTHERWISE NOTED.
2. REFER TO ES800 AND ES801 FOR FEEDER SCHEDULE.

CONSTRUCTION NOTES:

1. RECONNECT PERMANENT FEEDER.
2. REMOVE TEMPORARY FEEDER.
3. SET LONG TIME PICKUP TO "AT" VALUE SHOWN FOR EACH BREAKER IN LOW VOLTAGE SWITCHGEAR. SET ALL OTHER TRIP UNIT ADJUSTMENTS TO VALUES FROM COORDINATION STUDY PER SPEC SECTION 260573.

AMENDMENT DRAWING

SUPERSEDES 100-EP602T5

-	-
-	-
-	-
-	-
-	-
-	-
-	-
-	-
REVISION 1	04-01-16
Revisions:	Date

CONSULTANTS:

SÄZÄN GROUP
600 Stewart St., Ste 1400
Seattle, Washington 98101
Tel 206.267.1700
Fax 206.267.1701
SAZAN # 269-1507

Drawing Title: SECONDARY DISTRIBUTION - ONE LINE - TEMPORARY #5

Approved: Project Director
-
-
VAPAHCS PLANNING AND ENGINEERING

Project Title: VA PUGET SOUND HEALTH CARE SYSTEM UPGRADE SEATTLE ELECTRICAL DISTRIBUTION FROM 5kV TO 15kV

Location: 1660 South Columbian Way, Seattle, WA 98108

Date: 02-25-2016 | Checked: K.ANDERSON | Drawn: A.WOOLF

Project Number: 663-15-102

Building Number: 100

Drawing Number: 100-EP602T5R

Dwg. -- of --

Office of Construction and Facilities Management

Department of Veterans Affairs

VA FORM 08-6231

P:\269-1507 VAMC Seattle 5kV to 15kV Upgrade\DWG\ELEC\100-EP60275.dwg 3-30-16 10:56:48 AM cpeters

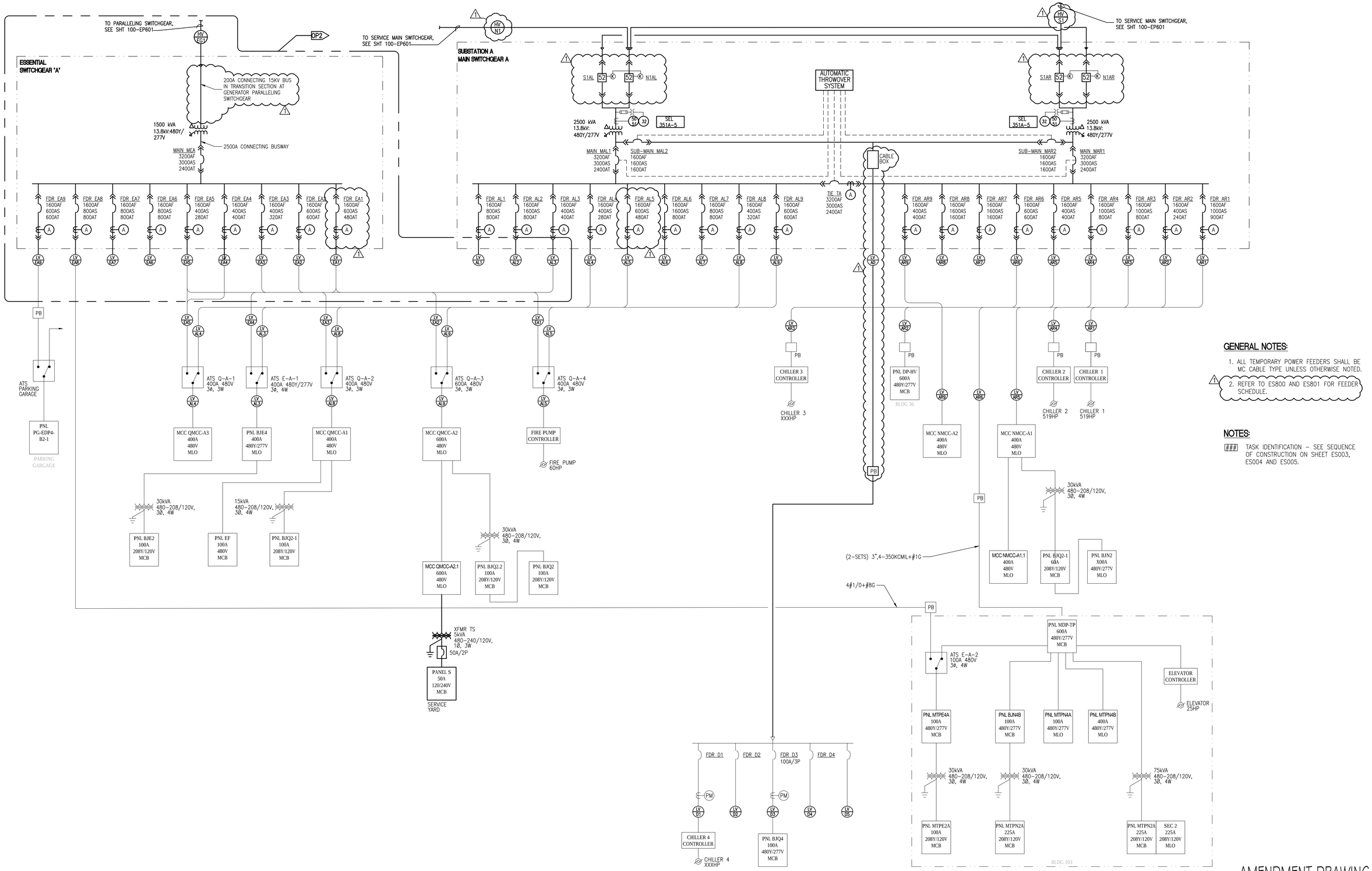

GENERAL NOTES:

1. ALL TEMPORARY POWER FEEDERS SHALL BE MC CABLE TYPE UNLESS OTHERWISE NOTED.
2. REFER TO ES800 AND ES801 FOR FEEDER SCHEDULE.

NOTES:

TASK IDENTIFICATION – SEE SEQUENCE OF CONSTRUCTION ON SHEET ES003, ES004 AND ES005.

AMENDMENT DRAWING

SUPERSEDES 100-EP602

REVISION 1	04-01-16
Revisions:	Date

CONSULTANTS:

SAZAN GROUP
600 Stewart St., Ste 1400
Seattle, Washington 98101
Tel 206.267.1700
Fax 206.267.1701
SAZAN # 269-1507

Drawing Title: SECONDARY DISTRIBUTION - ONE LINE

Approved: Project Director
–
–
VAPAHCS PLANNING AND ENGINEERING

Project Title: VA PUGET SOUND HEALTH CARE SYSTEM UPGRADE SEATTLE ELECTRICAL DISTRIBUTION FROM 5kV TO 15kV

Location: 1660 South Columbian Way, Seattle, WA 98108

Date	Checked	Drawn
02-25-2016	K.ANDERSON	A.WOOLF

Project Number: 663-15-102

Building Number: 100

Drawing Number: 100-EP602R

Dwg. -- of --

Office of Construction and Facilities Management

Department of Veterans Affairs

VA FORM 08-6231

P:\269-1507 VAMC Seattle 5kV to 15kV Upgrade\DWG\ELEC\100-EP602.dwg 3-30-16 10:56:58 AM cpeters

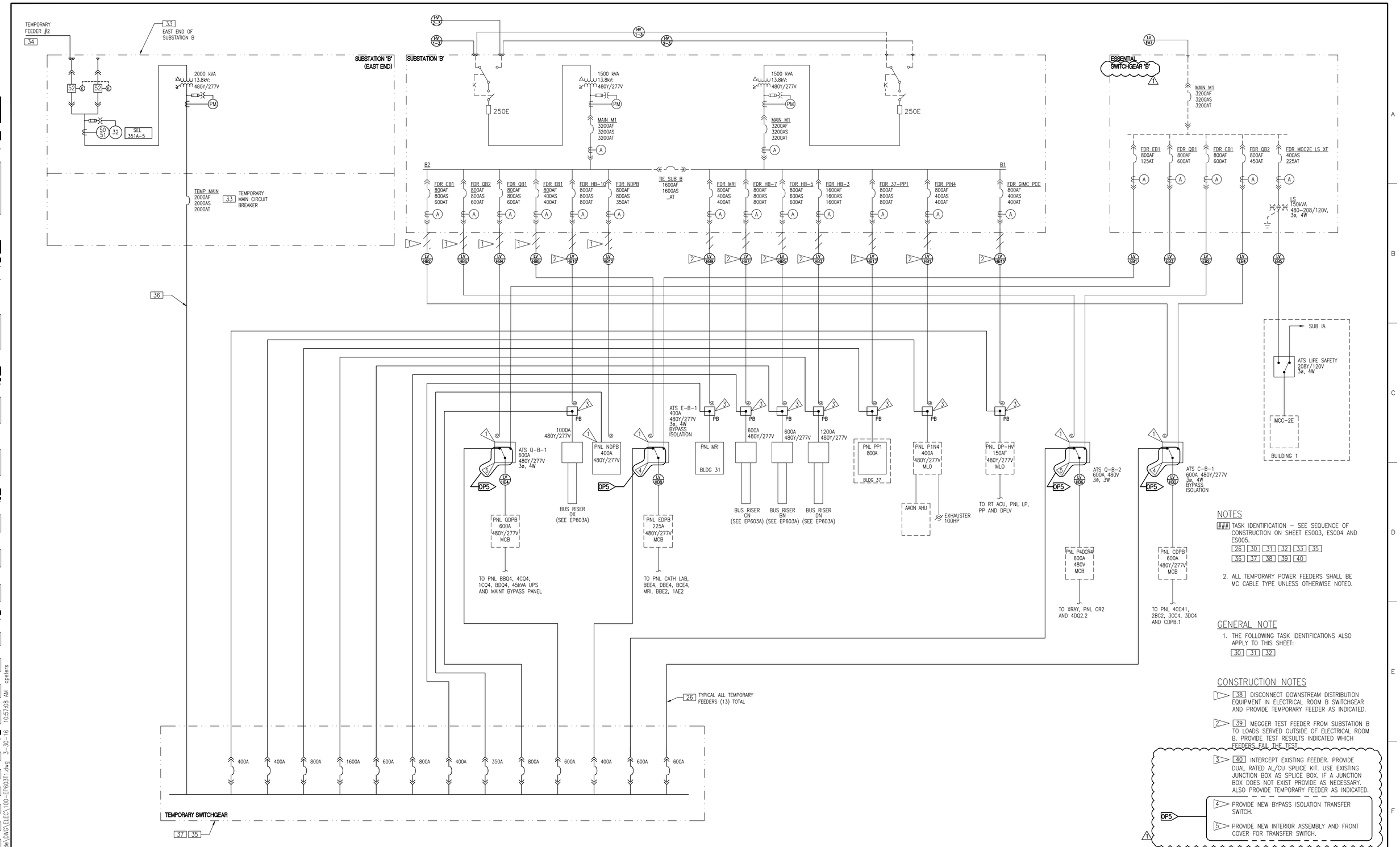

NOTES

TASK IDENTIFICATION – SEE SEQUENCE OF CONSTRUCTION ON SHEET ES003, ES004 AND ES005.

26 30 31 32 33 35
36 37 38 39 40

2. ALL TEMPORARY POWER FEEDERS SHALL BE MC CABLE TYPE UNLESS OTHERWISE NOTED.

GENERAL NOTE

1. THE FOLLOWING TASK IDENTIFICATIONS ALSO APPLY TO THIS SHEET:

30 31 32

CONSTRUCTION NOTES

1 38 DISCONNECT DOWNSTREAM DISTRIBUTION EQUIPMENT IN ELECTRICAL ROOM B SWITCHGEAR AND PROVIDE TEMPORARY FEEDER AS INDICATED.

2 39 MEGGER TEST FEEDER FROM SUBSTATION B TO LOADS SERVED OUTSIDE OF ELECTRICAL ROOM B. PROVIDE TEST RESULTS INDICATED WHICH FEEDERS FAIL THE TEST.

3 40 INTERCEPT EXISTING FEEDER. PROVIDE DUAL RATED AL/CU SPLICE KIT. USE EXISTING JUNCTION BOX AS SPLICE BOX. IF A JUNCTION BOX DOES NOT EXIST PROVIDE AS NECESSARY. ALSO PROVIDE TEMPORARY FEEDER AS INDICATED.

OP5

4 PROVIDE NEW BYPASS ISOLATION TRANSFER SWITCH.

5 PROVIDE NEW INTERIOR ASSEMBLY AND FRONT COVER FOR TRANSFER SWITCH.

AMENDMENT DRAWING

SUPERSEDES EP603T1

-	-
-	-
-	-
-	-
-	-
-	-
-	-
-	-
REVISION 1	04-01-16
Revisions:	Date

CONSULTANTS:

SAZAN GROUP
600 Stewart St., Ste 1400
Seattle, Washington 98101
Tel 206.267.1700
Fax 206.267.1701
SAZAN # 269-1507

Drawing Title: SECONDARY DISTRIBUTION - ONE LINE (SUBSTATION "B" AND ESSENTIAL "B") - TEMPORARY #1

Approved: Project Director
VAPAHCS PLANNING AND ENGINEERING

Project Title: VA PUGET SOUND HEALTH CARE SYSTEM UPGRADE SEATTLE ELECTRICAL DISTRIBUTION FROM 5kV TO 15kV

Location: 1660 South Columbian Way, Seattle, WA 98108

Date	Checked	Drawn
02-25-2016	K.ANDERSON	A.WOOLF

Project Number: 663-15-102
Building Number: 100
Drawing Number: 100-EP603T1
Dwg. -- of --

Office of Construction and Facilities Management
Department of Veterans Affairs

VA FORM 08-6231

P:\269-1507 VAMC Seattle 5kV to 15kV Upgrade\DWG\ELEC\100-EP603T.dwg 3-30-16 10:57:08 AM cpeters

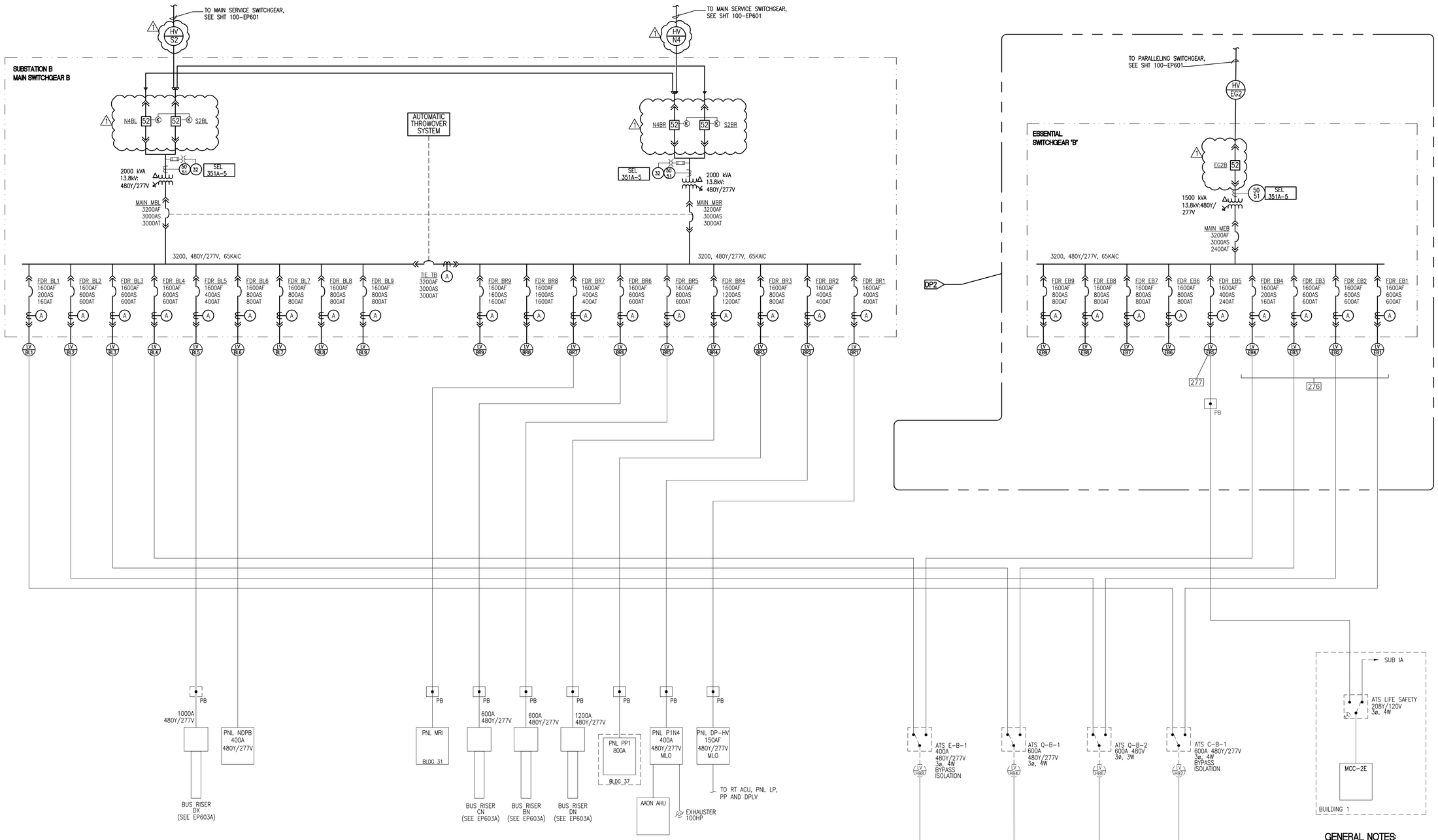

GENERAL NOTES:

1. ALL TEMPORARY POWER FEEDERS SHALL BE MC CABLE TYPE UNLESS OTHERWISE NOTED.
2. REFER TO ES800 AND ES801 FOR FEEDER SCHEDULE.

NOTES:

TASK IDENTIFICATION – SEE SEQUENCE OF CONSTRUCTION ON SHEET ES003, ES004 AND ES005.

159 160

AMENDMENT DRAWING

SUPERSEDES 100-EP603

-	-
-	-
-	-
-	-
-	-
-	-
-	-
-	-
REVISION 1	04-01-16
Revisions:	Date

CONSULTANTS:

SÄZÄN GROUP
600 Stewart St., Ste 1400
Seattle, Washington 98101
Tel 206.267.1700
Fax 206.267.1701
SAZAN # 269-1507

Drawing Title: SECONDARY DISTRIBUTION - ONE LINE (SUBSTATION "B" AND ESSENTIAL "B")

Approved Project Director: VAPAHCS PLANNING AND ENGINEERING

Project Title: VA PUGET SOUND HEALTH CARE SYSTEM UPGRADE SEATTLE ELECTRICAL DISTRIBUTION FROM 5kV TO 15kV

Location: 1660 South Columbian Way, Seattle, WA 98108

Date: 02-25-2016 | Checked: K.ANDERSON | Drawn: A.WOOLF

Project Number: 663-15-102

Building Number: 100

Drawing Number: 100-EP603R

Dwg. -- of --

Office of Construction and Facilities Management

Department of Veterans Affairs

VA FORM 08-6231

P:\269-1507 VAMC Seattle 5kV to 15kV Upgrade\DWG\ELEC\100-EP603.dwg 3-30-16 10:57:40 AM cpeters

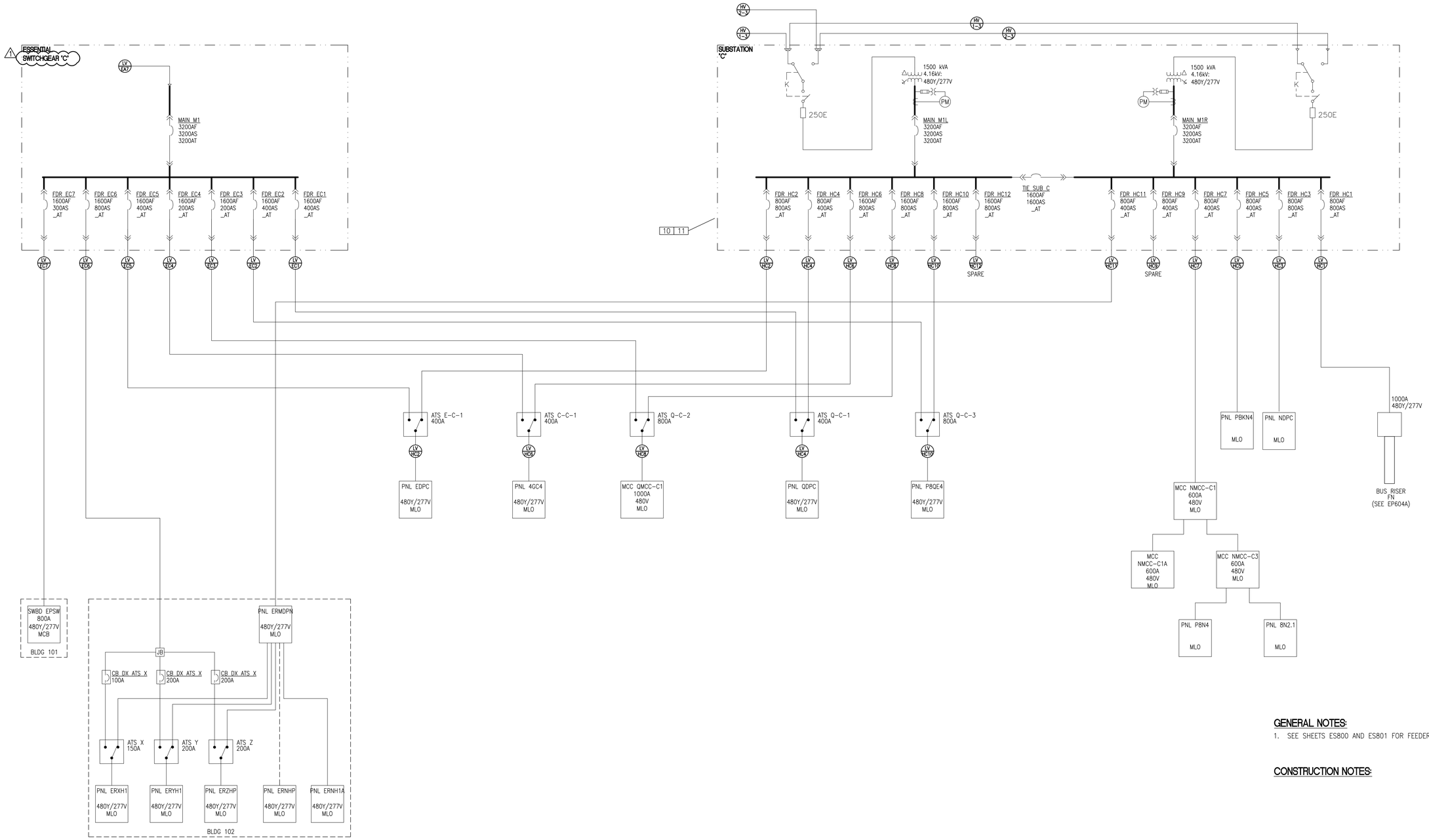

GENERAL NOTES:

1. SEE SHEETS ES800 AND ES801 FOR FEEDER SCHEDULES.

CONSTRUCTION NOTES:

NOTES:

TASK IDENTIFICATION – SEE SEQUENCE OF CONSTRUCTION ON SHEET ES003, ES004 AND ES005.
10 11

AMENDMENT DRAWING

SUPERSEDES EP604T0

-	-
-	-
-	-
-	-
-	-
-	-
-	-
-	-
AMENDDMENT #1	04-01-16
Revisions:	Date

CONSULTANTS:

SÄZÄN GROUP
600 Stewart St., Ste 1400
Seattle, Washington 98101
Tel 206.267.1700
Fax 206.267.1701
SAZAN # 269-1507

Drawing Title: SECONDARY DISTRIBUTION - ONE LINE (SUBSTATION "C" AND ESSENTIAL "C") - TEMPORARY #0

Approved Project Director: - - VAPAHCS PLANNING AND ENGINEERING

Project Title: VA PUGET SOUND HEALTH CARE SYSTEM UPGRADE SEATTLE ELECTRICAL DISTRIBUTION FROM 5kV TO 15kV

Location: 1660 South Columbian Way, Seattle, WA 98108

Date: 02-25-2016 | Checked: K.ANDERSON | Drawn: A.WOOLF

Project Number: 663-15-102

Building Number: 100

Drawing Number: 100-EP604T0R

Dwg. -- of --

Office of Construction and Facilities Management

Department of Veterans Affairs

VA FORM 08-6231

P:\269-1507 VAMC Seattle 5kV to 15kV Upgrade\DWG\ELEC\100-EP604T0.dwg 3-30-16 10:57:50 AM cpeters

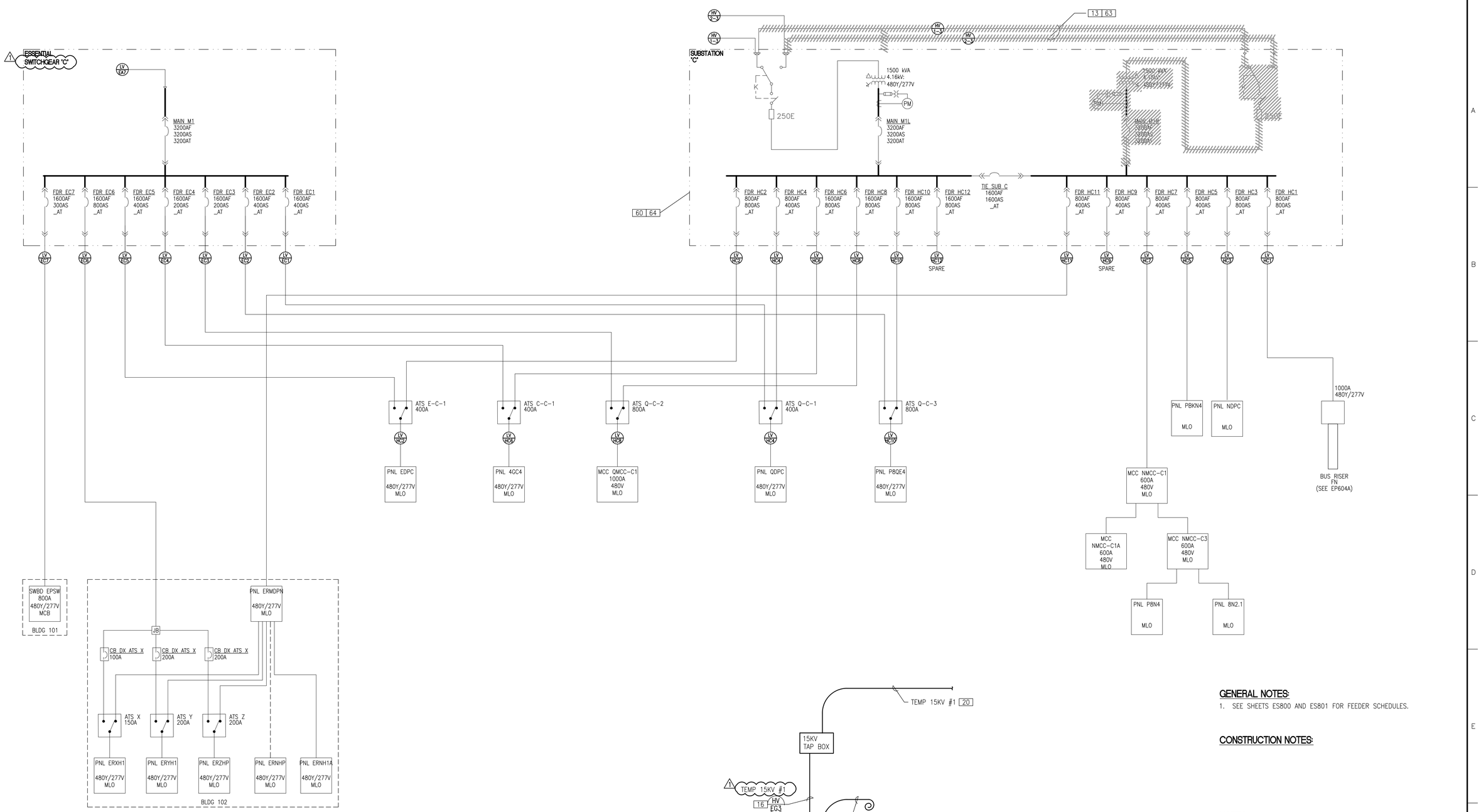

GENERAL NOTES:

1. SEE SHEETS ES800 AND ES801 FOR FEEDER SCHEDULES.

CONSTRUCTION NOTES:

NOTES:

TASK IDENTIFICATION – SEE SEQUENCE OF CONSTRUCTION ON SHEET ES003, ES004 AND ES005.

12 | 16 | 17 | 20 | 60 | 63 | 65

AMENDMENT DRAWING

SUPERSEDES EP604T1

REVISION 1	04-01-16
Revisions:	Date

CONSULTANTS:

SÄZÄN GROUP
600 Stewart St., Ste 1400
Seattle, Washington 98101
Tel 206.267.1700
Fax 206.267.1701
SAZAN # 269-1507

Drawing Title: SECONDARY DISTRIBUTION - ONE LINE (SUBSTATION "C" AND ESSENTIAL "C") - TEMPORARY #1

Approved Project Director: - - VAPAHCS PLANNING AND ENGINEERING

Project Title: VA PUGET SOUND HEALTH CARE SYSTEM UPGRADE SEATTLE ELECTRICAL DISTRIBUTION FROM 5kV TO 15kV

Location: 1660 South Columbian Way, Seattle, WA 98108

Date: 02-25-2016 | Checked: K.ANDERSON | Drawn: A.WOOLF

Project Number: 663-15-102

Building Number: 100

Drawing Number: 100-EP604T1R

Dwg. -- of --

Office of Construction and Facilities Management

Department of Veterans Affairs

VA FORM 08-6231

P:\269-1507 VAMC Seattle 5kV to 15kV Upgrade\DWG\ELEC\100-EP60411.dwg 3-30-16 10:58:00 AM cpeters

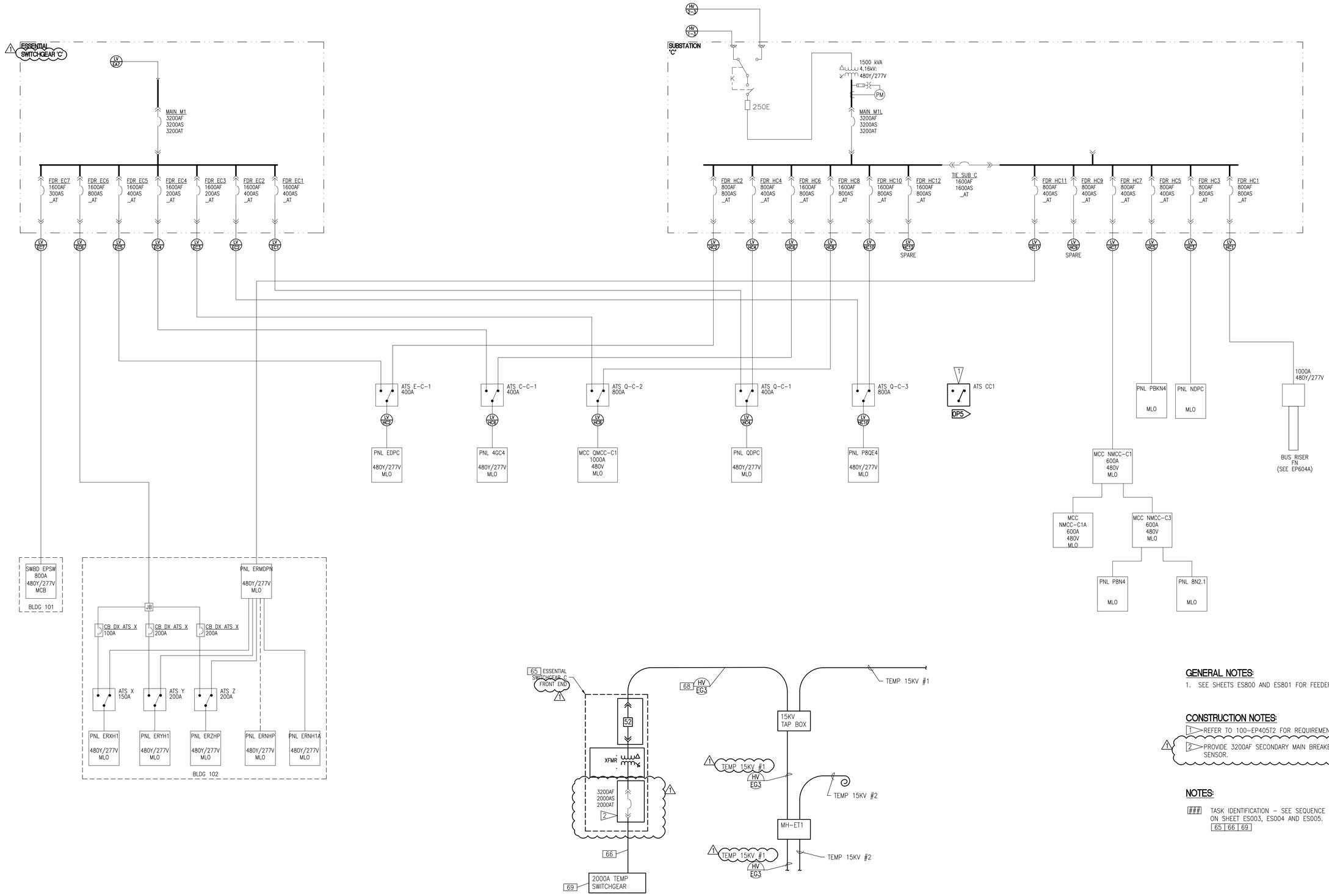

GENERAL NOTES:

1. SEE SHEETS ES800 AND ES801 FOR FEEDER SCHEDULES.

CONSTRUCTION NOTES:

1 REFER TO 100-EP405T2 FOR REQUIREMENT.

1 2 PROVIDE 3200AF SECONDARY MAIN BREAKER WITH 2000AF/2000AT SENSOR.

NOTES:

TASK IDENTIFICATION - SEE SEQUENCE OF CONSTRUCTION ON SHEET ES003, ES004 AND ES005. 65 66 69

AMENDMENT DRAWING

SUPERSEDES EP604T2

Revisions	Date
REVISION 1	04-01-16
-	-
-	-
-	-
-	-
-	-
-	-
-	-
-	-

CONSULTANTS:

SÄZÄN GROUP
600 Stewart St., Ste 1400
Seattle, Washington 98101
Tel 206.267.1700
Fax 206.267.1701
SAZAN # 269-1507

Drawing Title: SECONDARY DISTRIBUTION - ONE LINE (SUBSTATION "C" AND ESSENTIAL "C") - TEMPORARY #2

Approved Project Director: - - VAPAHCS PLANNING AND ENGINEERING

Project Title: VA PUGET SOUND HEALTH CARE SYSTEM UPGRADE SEATTLE ELECTRICAL DISTRIBUTION FROM 5kV TO 15kV

Location: 1660 South Columbian Way, Seattle, WA 98108

Date: 02-25-2016 | Checked: K.ANDERSON | Drawn: A.WOOLF

Project Number: 663-15-102

Building Number: 100

Drawing Number: 100-EP604T2R

Dwg. -- of --

Office of Construction and Facilities Management

Department of Veterans Affairs

VA FORM 08-6231

P:\269-1507 VAMC Seattle 5kV to 15kV Upgrade\DWG\ELEC\100-EP604T2.dwg 3-30-16 10:58:10 AM cpeters

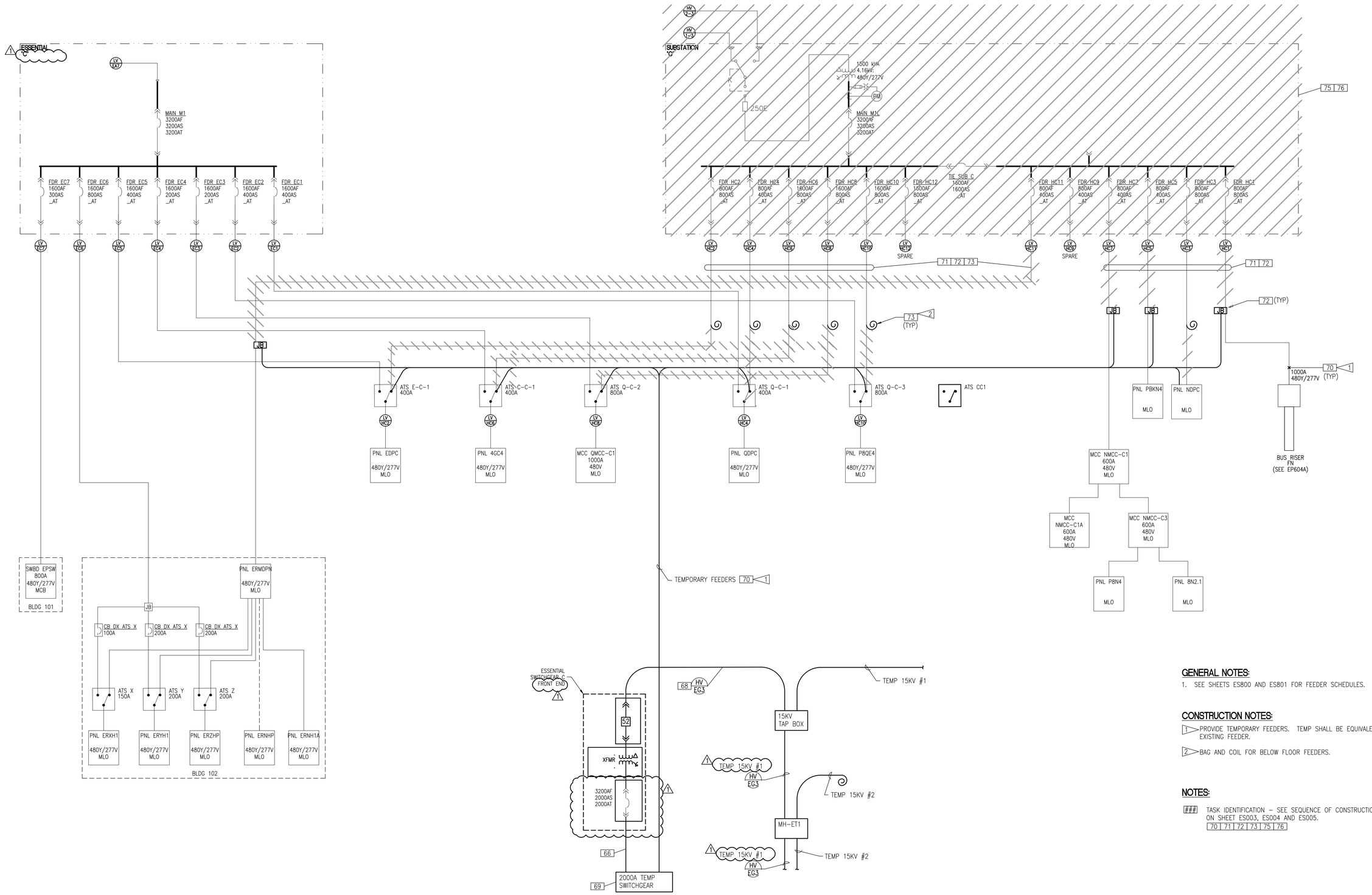

GENERAL NOTES:

1. SEE SHEETS ES800 AND ES801 FOR FEEDER SCHEDULES.

CONSTRUCTION NOTES:

1. PROVIDE TEMPORARY FEEDERS. TEMP SHALL BE EQUIVALENT TO EXISTING FEEDER.
2. BAG AND COIL FOR BELOW FLOOR FEEDERS.

NOTES:

TASK IDENTIFICATION – SEE SEQUENCE OF CONSTRUCTION ON SHEET ES003, ES004 AND ES005.
70 | 71 | 72 | 73 | 75 | 76

AMENDMENT DRAWING

SUPERSEDES EP604T3

Revisions	Date
-	-
-	-
-	-
-	-
-	-
-	-
-	-
-	-
REVISION 1	04-01-16

CONSULTANTS:

SÄZÄN GROUP
600 Stewart St., Ste 1400
Seattle, Washington 98101
Tel 206.267.1700
Fax 206.267.1701
SAZAN # 269-1507

Drawing Title: SECONDARY DISTRIBUTION - ONE LINE (SUBSTATION "C" AND ESSENTIAL "C") - TEMPORARY #3

Approved Project Director: - - VAPAHCS PLANNING AND ENGINEERING

Project Title: VA PUGET SOUND HEALTH CARE SYSTEM UPGRADE SEATTLE ELECTRICAL DISTRIBUTION FROM 5kV TO 15kV

Location: 1660 South Columbian Way, Seattle, WA 98108

Date: 02-25-2016 | Checked: K.ANDERSON | Drawn: A.WOOLF

Project Number: 663-15-102

Building Number: 100

Drawing Number: 100-EP604T3R

Dwg. -- of --

Office of Construction and Facilities Management

Department of Veterans Affairs

VA FORM 08-6231

P:\269-1507 VAMC Seattle 5kV to 15kV Upgrade\DWG\ELEC\100-EP604T3.dwg 3-30-16 10:58:20 AM cpeters

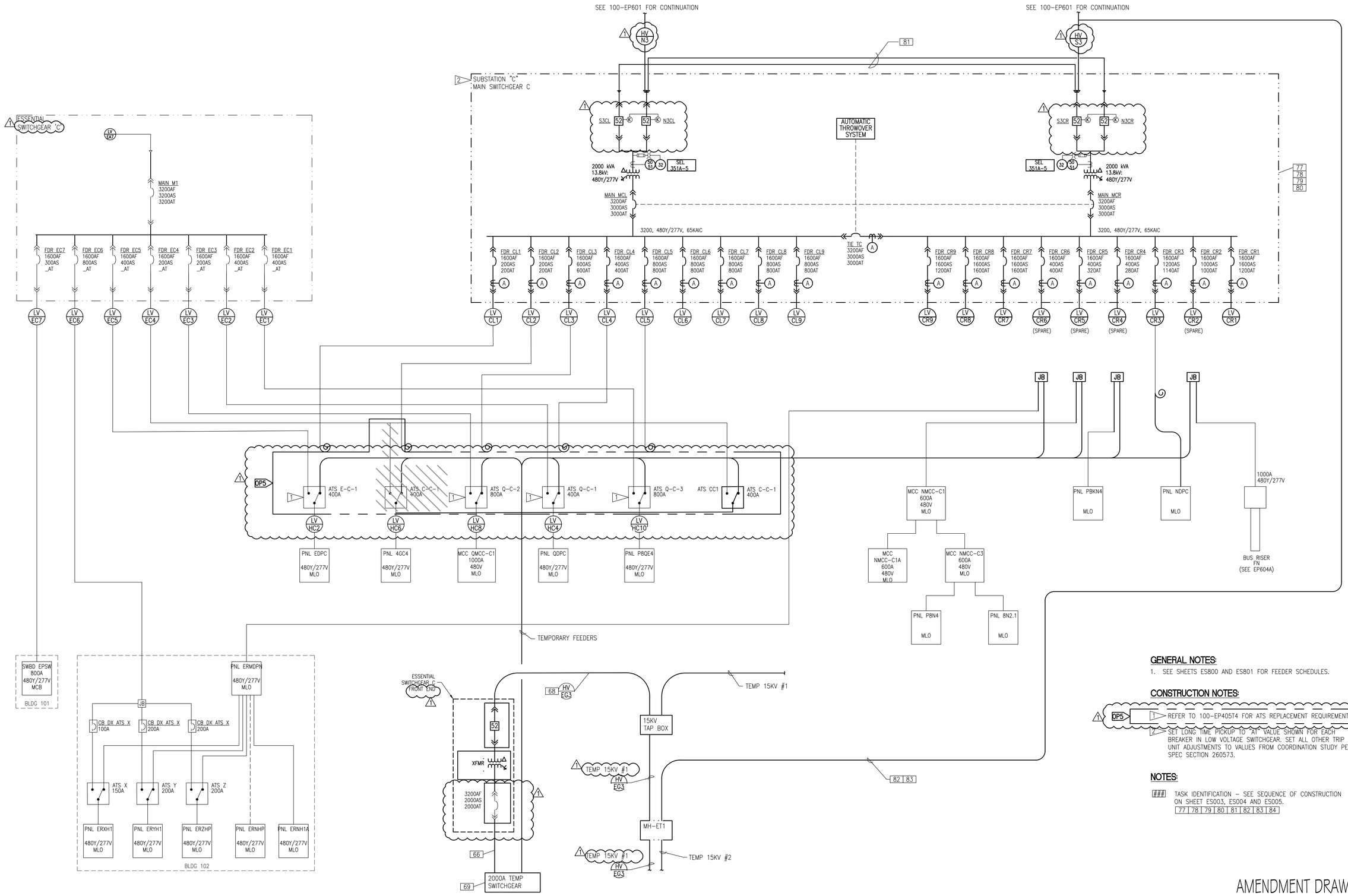

GENERAL NOTES:

1. SEE SHEETS ES800 AND ES801 FOR FEEDER SCHEDULES.

CONSTRUCTION NOTES:

OP5
1. REFER TO 100-EP405T4 FOR ATS REPLACEMENT REQUIREMENT.
2. SET LONG TIME PICKUP TO "AT" VALUE SHOWN FOR EACH BREAKER IN LOW VOLTAGE SWITCHGEAR. SET ALL OTHER TRIP UNIT ADJUSTMENTS TO VALUES FROM COORDINATION STUDY PER SPEC SECTION 260573.

NOTES:

TASK IDENTIFICATION – SEE SEQUENCE OF CONSTRUCTION ON SHEET ES003, ES004 AND ES005.

77 | 78 | 79 | 80 | 81 | 82 | 83 | 84

AMENDMENT DRAWING

SUPERSEDES EP604T4

-	-
-	-
-	-
-	-
-	-
-	-
-	-
-	-
REVISION 1	04-01-16
Revisions:	Date

CONSULTANTS:

SAZAN GROUP
600 Stewart St., Ste 1400
Seattle, Washington 98101
Tel 206.267.1700
Fax 206.267.1701
SAZAN # 269-1507

Drawing Title: SECONDARY DISTRIBUTION - ONE LINE (SUBSTATION "C" AND ESSENTIAL "C") - TEMPORARY #4

Approved Project Director: - - VAPAHCS PLANNING AND ENGINEERING

Project Title: VA PUGET SOUND HEALTH CARE SYSTEM UPGRADE SEATTLE ELECTRICAL DISTRIBUTION FROM 5kV TO 15kV

Location: 1660 South Columbian Way, Seattle, WA 98108

Date	Checked	Drawn
02-25-2016	K.ANDERSON	A.WOOLF

Project Number: 663-15-102

Building Number: 100

Drawing Number: 100-EP604T4R

Dwg. -- of --

Office of Construction and Facilities Management

Department of Veterans Affairs

P:\269-1507 VAMC Seattle 5kV to 15kV Upgrade\DWG\ELEC\100-EP604T4.dwg 3-30-16 10:58:30 AM cpeters

VA FORM 08-6231

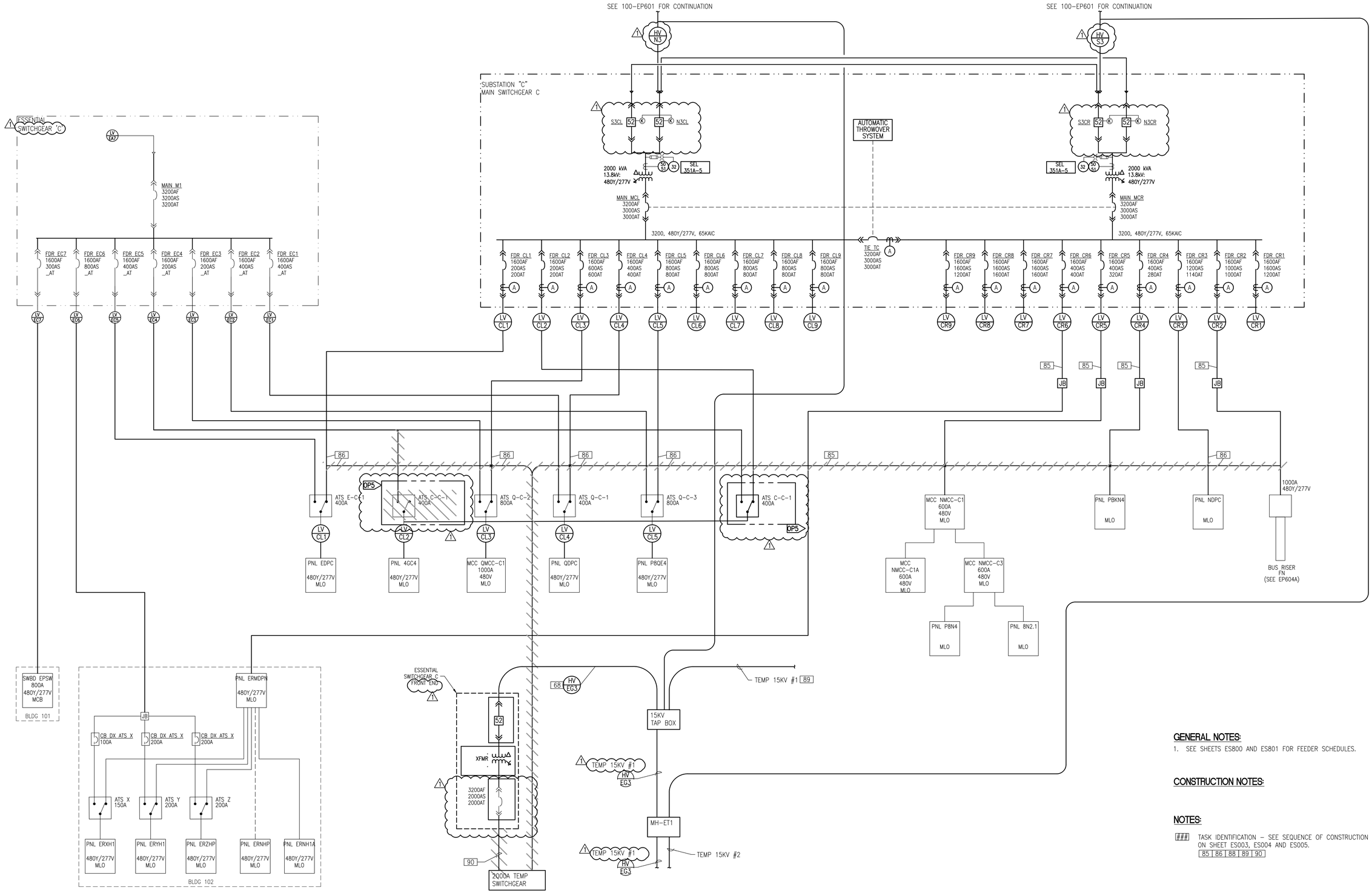

GENERAL NOTES:

1. SEE SHEETS ES800 AND ES801 FOR FEEDER SCHEDULES.

CONSTRUCTION NOTES:

NOTES:

TASK IDENTIFICATION – SEE SEQUENCE OF CONSTRUCTION ON SHEET ES003, ES004 AND ES005.
85 | 86 | 88 | 89 | 90

AMENDMENT DRAWING

SUPERSEDES EP604T5

-	-
-	-
-	-
-	-
-	-
-	-
-	-
-	-
REVISION 1	04-01-16
Revisions:	Date

CONSULTANTS:

SAZAN GROUP
600 Stewart St., Ste 1400
Seattle, Washington 98101
Tel 206.267.1700
Fax 206.267.1701
SAZAN # 269-1507

Drawing Title: SECONDARY DISTRIBUTION - ONE LINE (SUBSTATION "C" AND ESSENTIAL "C") - TEMPORARY #5

Approved Project Director: - - VAPAHCS PLANNING AND ENGINEERING

Project Title: VA PUGET SOUND HEALTH CARE SYSTEM UPGRADE SEATTLE ELECTRICAL DISTRIBUTION FROM 5kV TO 15kV

Location: 1660 South Columbian Way, Seattle, WA 98108

Date: 02-25-2016 | Checked: K.ANDERSON | Drawn: A.WOOLF

Project Number: 663-15-102

Building Number: 100

Drawing Number: 100-EP604T5R

Dwg. -- of --

Office of Construction and Facilities Management

Department of Veterans Affairs

VA FORM 08-6231

P:\269-1507 VAMC Seattle 5kV to 15kV Upgrade\DWG\ELEC\100-EP604T5.dwg 3-30-16 10:58:40 AM cpeters

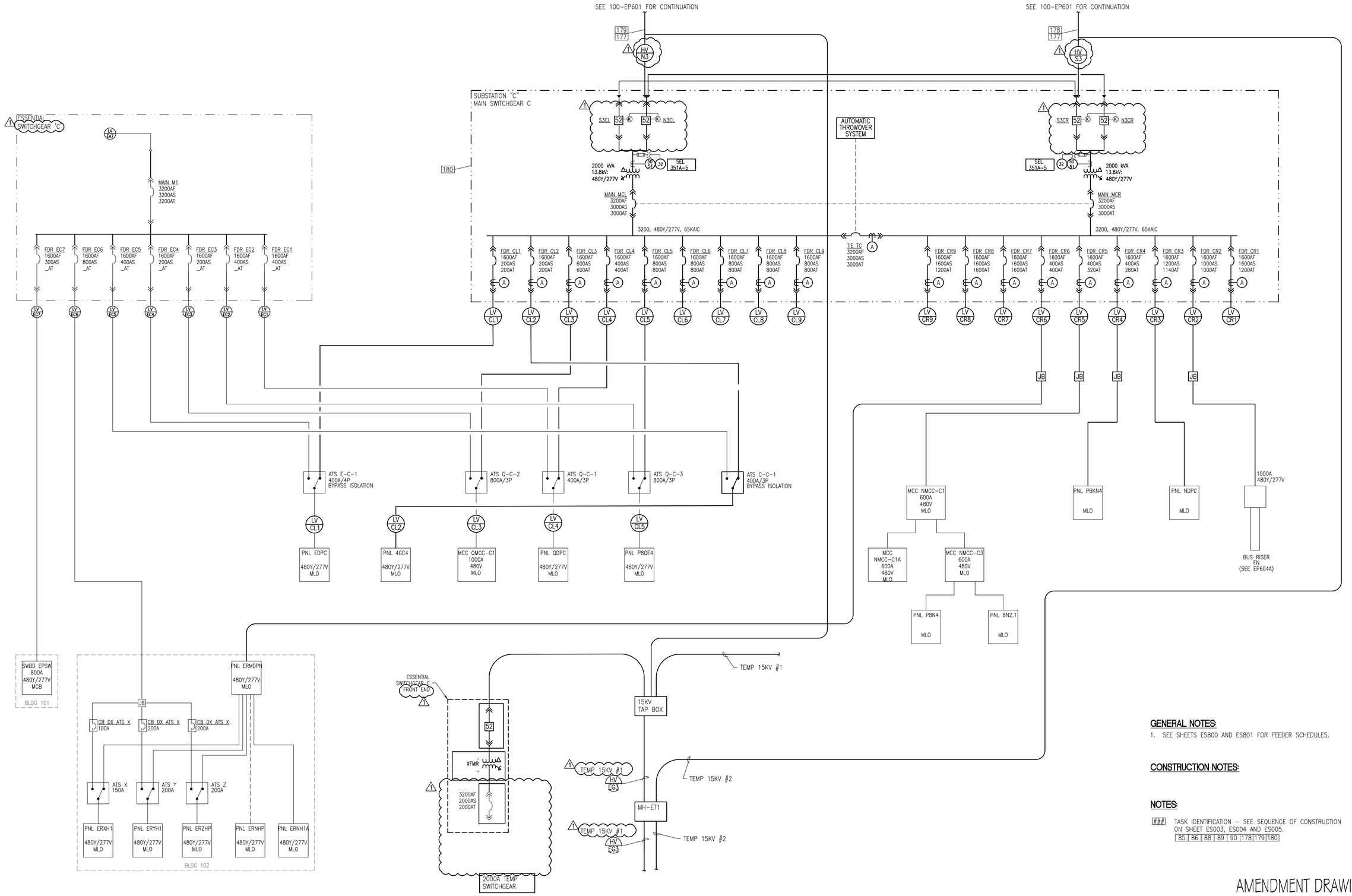

GENERAL NOTES:

1. SEE SHEETS ES800 AND ES801 FOR FEEDER SCHEDULES.

CONSTRUCTION NOTES:

NOTES:

TASK IDENTIFICATION – SEE SEQUENCE OF CONSTRUCTION ON SHEET ES003, ES004 AND ES005.

85 | 86 | 88 | 89 | 90 | 178 | 179 | 180

AMENDMENT DRAWING

SUPERSEDES EP604T6

Revisions:	Date
-	-
-	-
-	-
-	-
-	-
-	-
-	-
-	-
-	-

CONSULTANTS:

SÄZÄN GROUP
600 Stewart St., Ste 1400
Seattle, Washington 98101
Tel 206.267.1700
Fax 206.267.1701
SAZAN # 269-1507

Drawing Title: SECONDARY DISTRIBUTION - ONE LINE (SUBSTATION "C" AND ESSENTIAL "C") - TEMPORARY #6

Approved Project Director: - - VAPAHCS PLANNING AND ENGINEERING

Project Title: VA PUGET SOUND HEALTH CARE SYSTEM UPGRADE SEATTLE ELECTRICAL DISTRIBUTION FROM 5kV TO 15kV

Location: 1660 South Columbian Way, Seattle, WA 98108

Date: 02-25-2016 | Checked: K.ANDERSON | Drawn: A.WOOLF

Project Number: 663-15-102

Building Number: 100

Drawing Number: 100-EP604T6R

Dwg. -- of --

Office of Construction and Facilities Management

Department of Veterans Affairs

VA FORM 08-6231

P:\269-1507 VAMC Seattle 5kV to 15kV Upgrade\DWG\ELEC\100-EP60416.dwg 3-30-16 10:58:50 AM cpeters

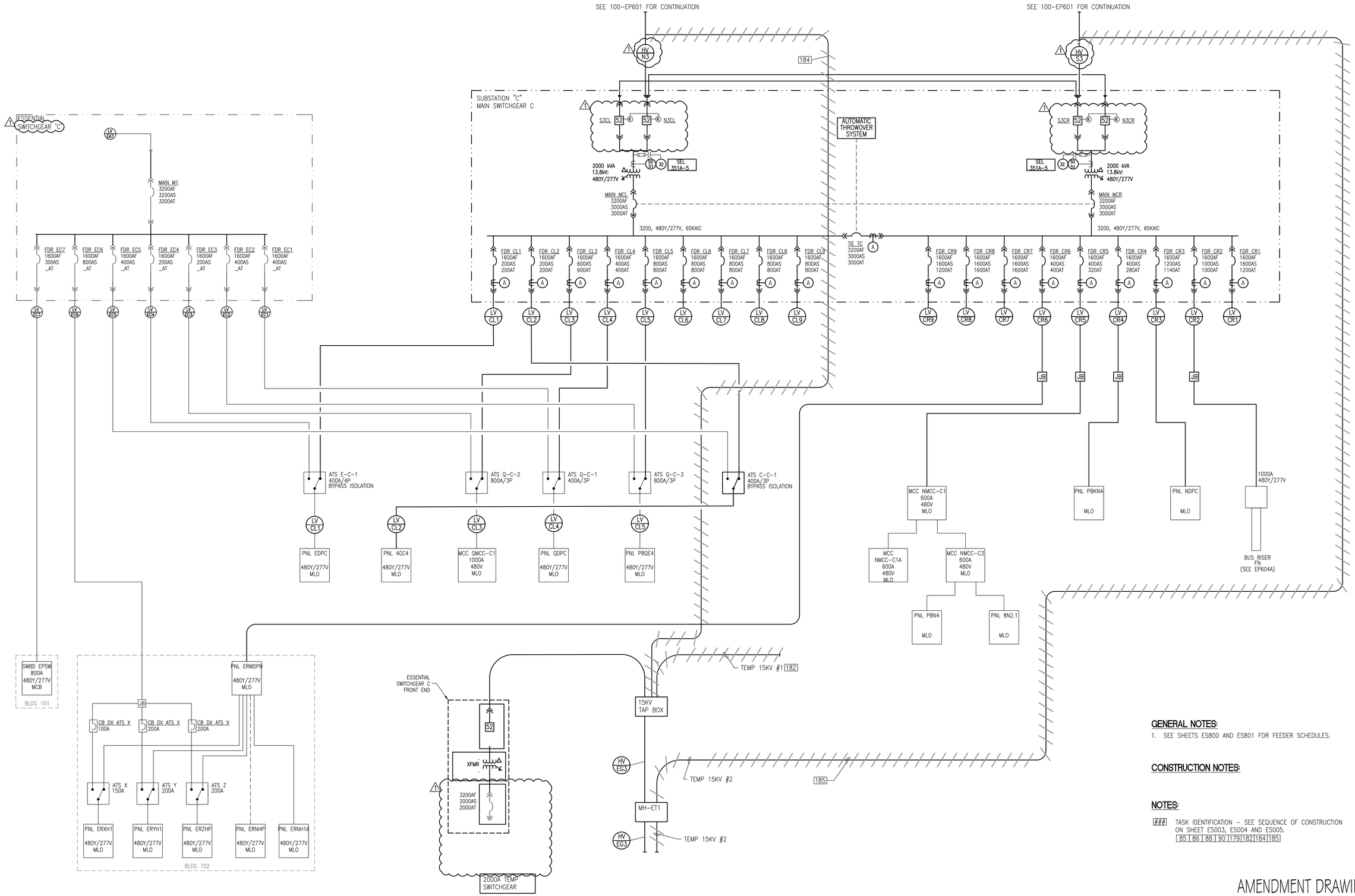

GENERAL NOTES:

1. SEE SHEETS ES800 AND ES801 FOR FEEDER SCHEDULES.

CONSTRUCTION NOTES:

NOTES:

TASK IDENTIFICATION – SEE SEQUENCE OF CONSTRUCTION ON SHEET ES003, ES004 AND ES005.

85 | 86 | 88 | 90 | 179 | 182 | 184 | 185

AMENDMENT DRAWING

SUPERSEDES EP604T7

Revisions:	Date
REVISION 1	04-01-16

CONSULTANTS:

SAZAN GROUP
600 Stewart St., Ste 1400
Seattle, Washington 98101
Tel 206.267.1700
Fax 206.267.1701
SAZAN # 269-1507

Drawing Title: SECONDARY DISTRIBUTION - ONE LINE (SUBSTATION "C" AND ESSENTIAL "C") - TEMPORARY #7

Approved: Project Director
VAPAHCS PLANNING AND ENGINEERING

Project Title: VA PUGET SOUND HEALTH CARE SYSTEM UPGRADE SEATTLE ELECTRICAL DISTRIBUTION FROM 5kV TO 15kV

Location: 1660 South Columbian Way, Seattle, WA 98108

Date: 02-25-2016 | Checked: K.ANDERSON | Drawn: A.WOOLF

Project Number: 663-15-102

Building Number: 100

Drawing Number: 100-EP604T7R

Dwg -- of --

Office of Construction and Facilities Management

Department of Veterans Affairs

VA FORM 08-6231

P:\269-1507 VAMC Seattle 5kV to 15kV Upgrade\DWG\ELEC\100-EP604T7.dwg 3-30-16 10:59:00 AM cpeters

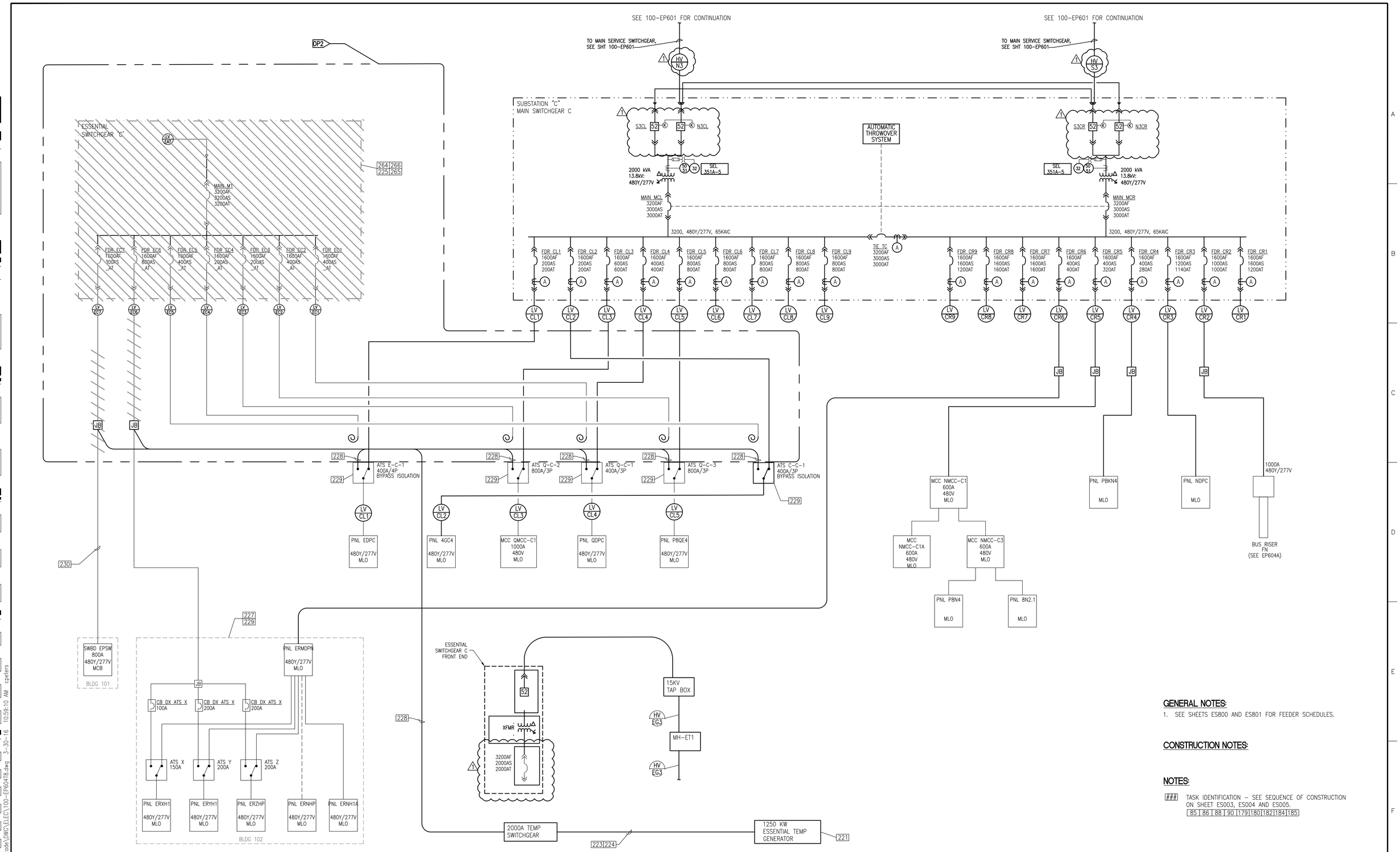

GENERAL NOTES:

1. SEE SHEETS ES800 AND ES801 FOR FEEDER SCHEDULES.

CONSTRUCTION NOTES:

NOTES:

TASK IDENTIFICATION – SEE SEQUENCE OF CONSTRUCTION ON SHEET ES003, ES004 AND ES005.

85 | 86 | 88 | 90 | 179 | 180 | 182 | 184 | 185

AMENDMENT DRAWING

SUPERSEDES EP604T8

REVISION 1	04-01-16
Revisions:	Date

CONSULTANTS:

SÄZÄN GROUP
600 Stewart St., Ste 1400
Seattle, Washington 98101
Tel 206.267.1700
Fax 206.267.1701
SAZAN # 269-1507

Drawing Title: SECONDARY DISTRIBUTION - ONE LINE (SUBSTATION "C" AND ESSENTIAL "C") - TEMPORARY #8

Approved Project Director: - - VAPAHCS PLANNING AND ENGINEERING

Project Title: VA PUGET SOUND HEALTH CARE SYSTEM UPGRADE SEATTLE ELECTRICAL DISTRIBUTION FROM 5kV TO 15kV

Location: 1660 South Columbian Way, Seattle, WA 98108

Date: 02-25-2016 | Checked: K.ANDERSON | Drawn: A.WOOLF

Project Number: 663-15-102

Building Number: 100

Drawing Number: 100-EP604T8R

Dwg. -- of --

Office of Construction and Facilities Management

Department of Veterans Affairs

VA FORM 08-6231

PLV269-1507 VAMC Seattle 5kV to 15kV Upgrade\DWG\ELEC\100-EP604T8.dwg 3-30-16 10:59:10 AM cpeters

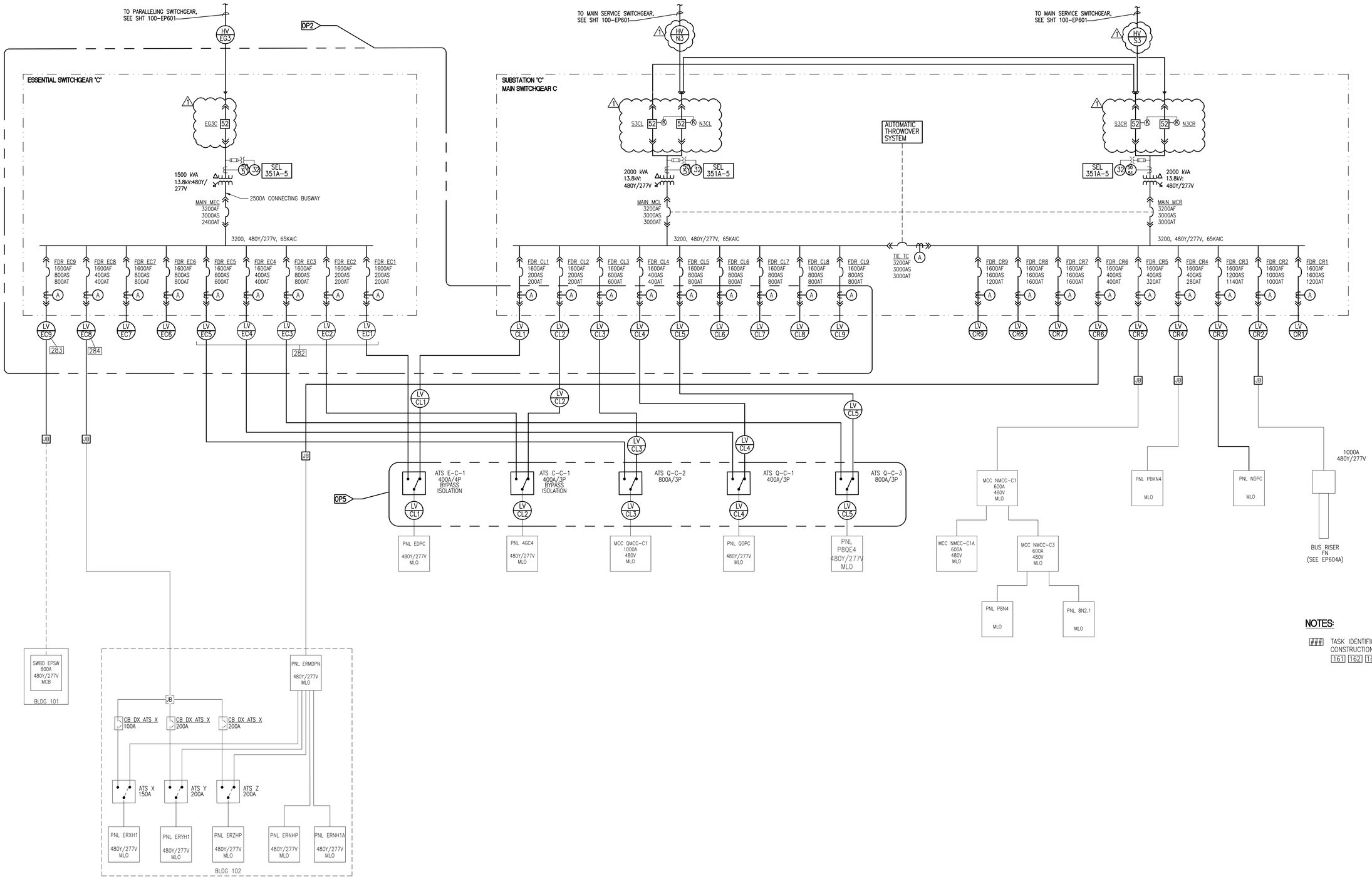

NOTES:

TASK IDENTIFICATION – SEE SEQUENCE OF CONSTRUCTION ON SHEET ES003 AND ES004. 161 162 163

AMENDMENT DRAWING

SUPERSEDES 100-EP604

-	-
-	-
-	-
-	-
-	-
-	-
-	-
-	-
REVISION 1	04-01-16
Revisions:	Date

CONSULTANTS:

SAZAN GROUP
600 Stewart St., Ste 1400
Seattle, Washington 98101
Tel 206.267.1700
Fax 206.267.1701
SAZAN # 269-1507

Drawing Title: SECONDARY DISTRIBUTION - ONE LINE (SUBSTATION "C" AND ESSENTIAL "C")

Approved Project Director: - - VAPAHCS PLANNING AND ENGINEERING

Project Title: VA PUGET SOUND HEALTH CARE SYSTEM UPGRADE SEATTLE ELECTRICAL DISTRIBUTION FROM 5kV TO 15kV

Location: 1660 South Columbian Way, Seattle, WA 98108

Date: 02-25-2016 | Checked: K.ANDERSON | Drawn: A.WOOLF

Project Number: 663-15-102

Building Number: 100

Drawing Number: 100-EP604R

Dwg. -- of --

Office of Construction and Facilities Management

Department of Veterans Affairs

VA FORM 08-6231

P:\269-1507 VAMC Seattle 5kV to 15kV Upgrade\DWG\ELEC\100-EP604.dwg 3-30-16 10:59:20 AM cpeters

PANEL 'S' SCHEDULE

LOCATION: SERVICE YARD
VOLTAGE: 120/240 1-PH, 3-WIRE
TYPE: BOLT-IN C/B — DOOR-IN-DOOR
GROUNDING: EQUIPMENT GROUND BUS
NEUTRAL: 100% RATED
MOUNTING: SURFACE — NEMA 1
SKIRTS: NONE — AIC RATING: 22 KA

60 A MAIN CIRCUIT BREAKER

CKT #	ITEM	NOTE	AMPS	POLE	LEFT	A	B	RIGHT	AMPS	POLE	NOTE	ITEM	CKT #
1	LIGHTS		20	1	180	•	—	—	500	20	1	CONTROL SW-S1	2
3	RECEPTACLE		20	1	720	—	—	•	500	20	1	CONTROL SW-N1	4
5	SPARE		20	1		•	—	—		20	1	SPARE	6
7	SPARE		20	1		—	—	•		20	1	SPARE	8
9	SPACE			1		•	—	—			1		10
11	SPACE			1		—	—	•			1		12
						A	B						
	Total Connected Phase Load (VA):				680			1,220					
	Total Connected Phase Load (Amps):				6			10					

	Conn	D.F.	Dmnd
Appliance or Dedicated Circuit:		1.00	
Computer Loads:	1.00	1.00	1.00
Appliance (Diversified Load):		1.00	
Electric Heat:		1.00	
Kitchen Equip (Count =):		1.00	
Lighting:	0.18	1.25	0.23
Motors and Compressors:		1.00	
Largest Motor:		1.25	
Miscellaneous:		1.00	
Receptacle:	0.72	1.00	0.72
Recept Over 10 kVA:		0.50	
Totals:	1.90		1.95
Demand Amps:			**8.10**

NOTES:
1. FEED FROM QMCC A2.1/A3 VIA 5KVA XFMR, 1-1/2"C, 3#6, 1#8G
2.
3.
4.
5.

PANEL 'BJQ2' SCHEDULE

LOCATION: ELECTRICAL ROOM
VOLTAGE: 120/208 3-PH, 4-WIRE
TYPE: BOLT-IN C/B — DOOR-IN-DOOR
GROUNDING: EQUIPMENT GROUND BUS
NEUTRAL: 100% RATED
MOUNTING: SURFACE — NEMA 1
SKIRTS: NONE — AIC RATING: 22 KA

100 A MAIN CIRCUIT BREAKER

CKT #	ITEM	NOTE	AMPS	POLE	LEFT	A	B	C	RIGHT	AMPS	POLE	NOTE	ITEM	CKT #
1	FP-1 (1/2HP)		20	1	1,176	•	—	—	2,500	30	1	2	#1 JACKET WATER HEATER LEFT SIDE	2
3	PUMP CONTROLLER		20	1	500	—	•	—	2,500	30	1	2	#1 JACKET WATER HEATER RIGHT SIDE	4
5	DP-1 (1/3HP)		20	1	864	—	—	•	2,500	30	1	2	#2 JACKET WATER HEATER LEFT SIDE	6
7	DP-2 (1/3HP)		20	1	864	•	—	—	2,500	30	1	2	#2 JACKET WATER HEATER RIGHT SIDE	8
9	FP-2 (1/2HP)		20	1	1,176	—	•	—		30	1	2	SPARE	10
11	DP-3 (1/3HP)		20	1	864	—	—	•		30	1	2	SPARE	12
13	DP-4 (1/3HP)		20	1	864	•	—	—	500	20	1		#1 GENERATOR CONTROL BE-103	14
15	SPARE		20	1		—	•	—	500	20	1		#2 GENERATOR CONTROL BE-103	16
17	SPARE		20	1		—	—	•		20	1		SPARE	18
19	DDC VIA XFMR RM BE-102		20	1	500	•	—	—	720	20	3		RP-1 (1HP)	20
21	SPARE		20	1		—	•	—	720	-	-		-	22
23	SPARE		20	1		—	—	•	720	-	-		-	24
25	SPARE		20	1		•	—	—	720	20	3		RP-2 (1HP)	26
27	SPARE		20	1		—	•	—	720	-	-		-	28
29	SPARE		20	1		—	—	•	720	-	-		-	30
31	SPARE		20	1		•	—	—		20	1		SPARE	32
33	SPARE		20	1		—	•	—		20	1		SPARE	34
35	SPARE		20	1		—	—	•		20	1		SPARE	36
37	SPARE		20	1		•	—	—	1,260	20	1		RECEPT - BE-102, BE-103	38
39	SPARE		20	1		—	•	—	1,260	20	1		RECEPT - BE-102, BE-103	40
41	SPARE		20	1		—	—	•		20	1		SPARE	42
						A	B	C						
	Total Connected Phase Load (VA):				11,604		9,876		8,668					
	Total Connected Phase Load (Amps):				97		82		72					

	Conn	D.F.	Dmnd
Appliance or Dedicated Circuit:		1.00	
Computer Loads:	3.36	1.00	3.36
Appliance (Diversified Load):		1.00	
Electric Heat:	15.00	1.00	15.00
Kitchen Equip (Count =):		1.00	
Lighting:		1.25	
Motors and Compressors:	7.10	1.00	7.10
Largest Motor:	2.16	1.25	2.70
Miscellaneous:		1.00	
Receptacle:	2.52	1.00	2.52
Recept Over 10 kVA:		0.50	
Totals:	30.15		30.69
Demand Amps:			**85.24**

NOTES:
1. FED FROM BJQ2-2/25,27,29, 2"C, 4#2, 1#8G
2. PROVIDE 1"C,2#8,1#10G
3.
4.
5.

PANEL 'BJQ2 - EXISTING' SCHEDULE

LOCATION: GENERATOR ROOM
VOLTAGE: 120/208 3-PH, 4-WIRE
TYPE: BOLT-IN C/B — DOOR-IN-DOOR
GROUNDING: EQUIPMENT GROUND BUS
NEUTRAL: 100% RATED
MOUNTING: SURFACE — NEMA 1
SKIRTS: NONE — AIC RATING: 22 KA

100 A MAIN CIRCUIT BREAKER

CKT #	ITEM	NOTE	AMPS	POLE	LEFT	A	B	C	RIGHT	AMPS	POLE	NOTE	ITEM	CKT #
1	~~#1 BATTERY CHARGER BE-103~~		20	1		•	—	—		30	1		~~#1 JACKET WATER HEATER LEFT SIDE~~	2
3	~~#2 BATTERY CHARGER BE-103~~		20	1		—	•	—		30	1		~~#1 JACKET WATER HEATER RIGHT SIDE~~	4
5	~~#3 BATTERY CHARGER BE-103~~		20	1		—	—	•		20	1		~~#1 GENERATOR CONTROL BE-103~~	6
7	~~#4 BATTERY CHARGER BE-103~~		20	1		•	—	—		20	1		~~#2 GENERATOR CONTROL BE-103~~	8
9	~~#5 BATTERY CHARGER BE-103~~		20	1		—	•	—		30	1		~~#2 JACKET WATER HEATER LEFT SIDE~~	10
11	SPARE		20	1		—	—	•		30	1		~~#2 JACKET WATER HEATER RIGHT SIDE~~	12
13	~~#1 FO PUMP BE-103~~		20	1		•	—	—		30	1		~~#3 JACKET WATER HEATER LEFT SIDE~~	14
15	SPARE		20	1		—	•	—		30	1		~~#3 JACKET WATER HEATER RIGHT SIDE~~	16
17	~~#2 FO PUMP BE-103/LOTO~~		20	1		—	—	•		20	1		~~#3 GENERATOR CONTROL BE-103~~	18
19	DDC VIA XFMR RM BE-102		20	1		•	—	—		20	1		~~#4 GENERATOR CONTROL BE-103~~	20
21	~~#3 FO PUMP BE-103~~		20	1		—	•	—		30	1		~~#4 JACKET WATER HEATER LEFT SIDE~~	22
23	SPARE		20	1		—	—	•		30	1		~~#4 JACKET WATER HEATER RIGHT SIDE~~	24
25	SPARE		20	1		•	—	—		30	1		~~#5 JACKET WATER HEATER LEFT SIDE~~	26
27	~~#4 FO PUMP BE-103~~		20	1		—	•	—		30	1		~~#5 JACKET WATER HEATER RIGHT SIDE~~	28
29	SPARE		20	1		—	—	•		20	1		~~#5 GENERATOR CONTROL BE-103~~	30
31	~~#5 FO PUMP BE-103~~		20	1		•	—	—		20	1		SPARE	32
33	SPARE		20	1		—	•	—		20	1		SPARE	34
35	SPARE		20	1		—	—	•		20	1		SPARE	36
37	SPARE		20	1		•	—	—		20	1		RECEPT - BE-102, BE-103	38
39	SPARE		20	1		—	•	—		20	1		RECEPT - BE-102, BE-103	40
41	SPARE		20	1		—	—	•		20	1		SPARE	42
						A	B	C						
	Total Connected Phase Load (VA):													
	Total Connected Phase Load (Amps):													

	Conn	D.F.	Dmnd
Appliance or Dedicated Circuit:		1.00	
Computer Loads:		1.00	
Appliance (Diversified Load):		1.00	
Electric Heat:		1.00	
Kitchen Equip (Count =):		1.00	
Lighting:		1.25	
Motors and Compressors:		1.00	
Largest Motor:		1.25	
Miscellaneous:		1.00	
Receptacle:		1.00	
Recept Over 10 kVA:		0.50	
Totals:			
Demand Amps:			

NOTES:
1. FED FROM BJQ2-2/25,27,29, 2"C, 4#2, 1#8G
2.
3.
4.
5.

AMENDMENT DRAWING
NEW DRAWING

-	-
-	-
-	-
-	-
-	-
-	-
-	-
-	-
REVISION 1	04-01-16
Revisions:	Date

CONSULTANTS:

SÄZÄN GROUP
600 Stewart St., Ste 1400
Seattle, Washington 98101
Tel 206.267.1700
Fax 206.267.1701
SAZAN # 269-1507

Drawing Title: PANEL SCHEDULES
Approved Project Director: - - VAPAHCS PLANNING AND ENGINEERING
Project Title: VA PUGET SOUND HEALTH CARE SYSTEM UPGRADE SEATTLE ELECTRICAL DISTRIBUTION FROM 5kV TO 15kV
Location: 1660 South Columbian Way, Seattle, WA 98108
Date: 02-25-2016 | Checked: A. WOOLF | Drawn: S. LIM
Project Number: 663-15-102
Building Number: 100
Drawing Number: 100-EP800
Dwg. -- of --

Office of Construction and Facilities Management
Department of Veterans Affairs

VA FORM 08-6231

P:\269-1507 VAMC Seattle 5kV to 15kV Upgrade\DWG\ELEC\100-EP800.dwg 3-30-16 10:59:37 AM cpeters

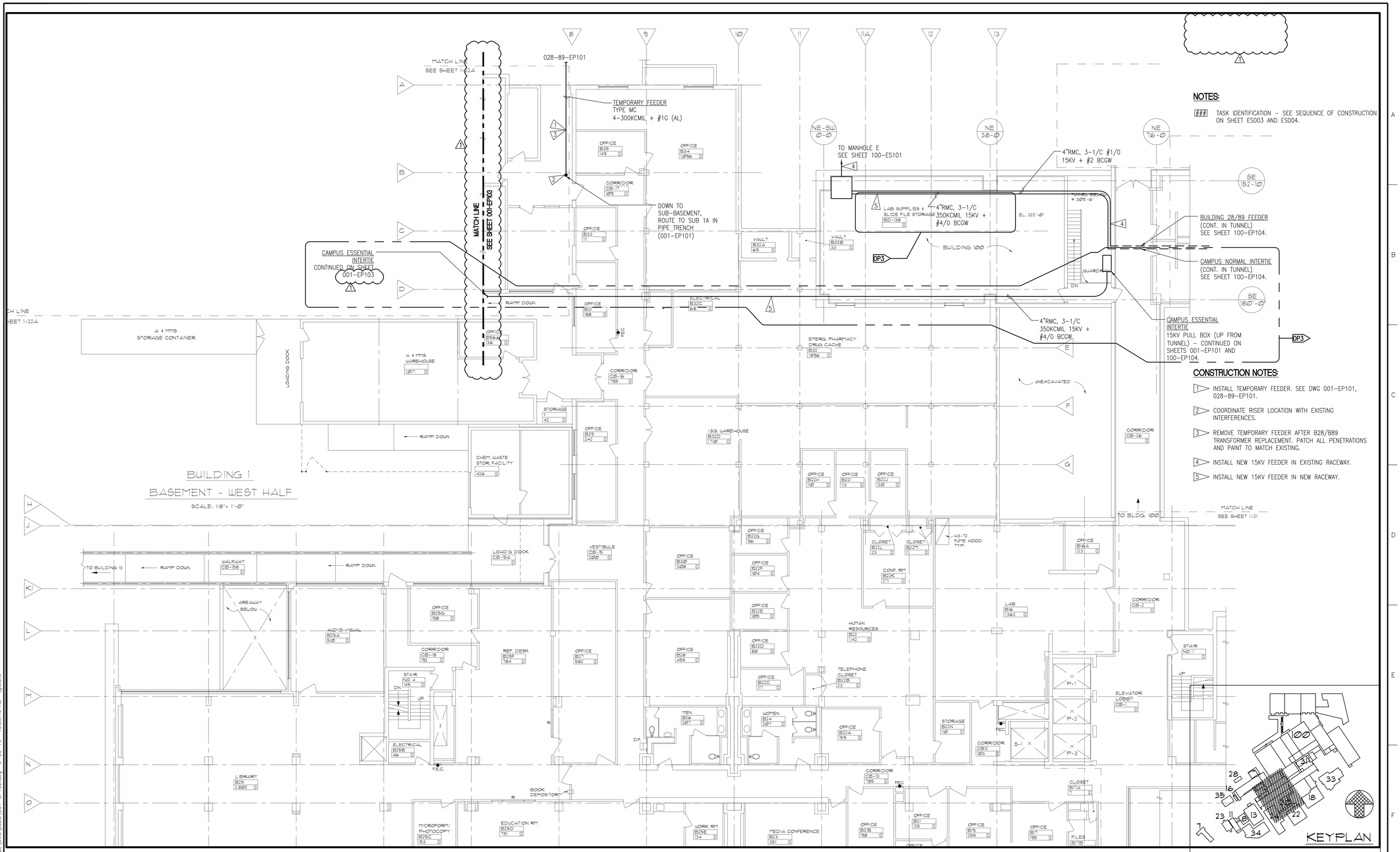

BUILDING 1

BASEMENT - WEST HALF

SCALE: 1/8" = 1'-0"

NOTES:

TASK IDENTIFICATION – SEE SEQUENCE OF CONSTRUCTION ON SHEET ES003 AND ES004.

CONSTRUCTION NOTES:

1. INSTALL TEMPORARY FEEDER. SEE DWG 001-EP101, 028-89-EP101.
2. COORDINATE RISER LOCATION WITH EXISTING INTERFERENCES.
3. REMOVE TEMPORARY FEEDER AFTER B28/B89 TRANSFORMER REPLACEMENT. PATCH ALL PENETRATIONS AND PAINT TO MATCH EXISTING.
4. INSTALL NEW 15KV FEEDER IN EXISTING RACEWAY.
5. INSTALL NEW 15KV FEEDER IN NEW RACEWAY.

AMENDMENT DRAWING

SUPERSEDES 001-EP102

Revisions:	Date
-	-
-	-
-	-
-	-
-	-
-	-
-	-
-	-
-	-
-	-

CONSULTANTS:

SÄZÄN GROUP
600 Stewart St., Ste 1400
Seattle, Washington 98101
Tel 206.267.1700
Fax 206.267.1701
SAZAN # 269-1507

Drawing Title: BASEMENT WEST FLOOR PLAN

Approved: Project Director
-
-
VAPAHCS PLANNING AND ENGINEERING

Project Title: VA PUGET SOUND HEALTH CARE SYSTEM UPGRADE SEATTLE ELECTRICAL DISTRIBUTION FROM 5kV TO 15kV

Location: 1660 South Columbian Way, Seattle, WA 98108

Date: 02-25-2016 | Checked: KANDERSON | Drawn: A.WOOLF

Project Number: 663-15-102

Building Number: 001

Drawing Number: 001-EP102R

Dwg. -- of --

Office of Construction and Facilities Management

Department of Veterans Affairs

P:\269-1507 VAMC Seattle 5kV to 15kV Upgrade\DWG\ELEC\001-EP102.dwg 3-30-16 10:59:46 AM cpeters

VA FORM 08-6231

CONSTRUCTION NOTES:

1. ROUTE FEEDER AT CEILING HEIGHT
2. PROVIDE STAINLESS STEEL PULLBOX WITH LOCKABLE COVER.

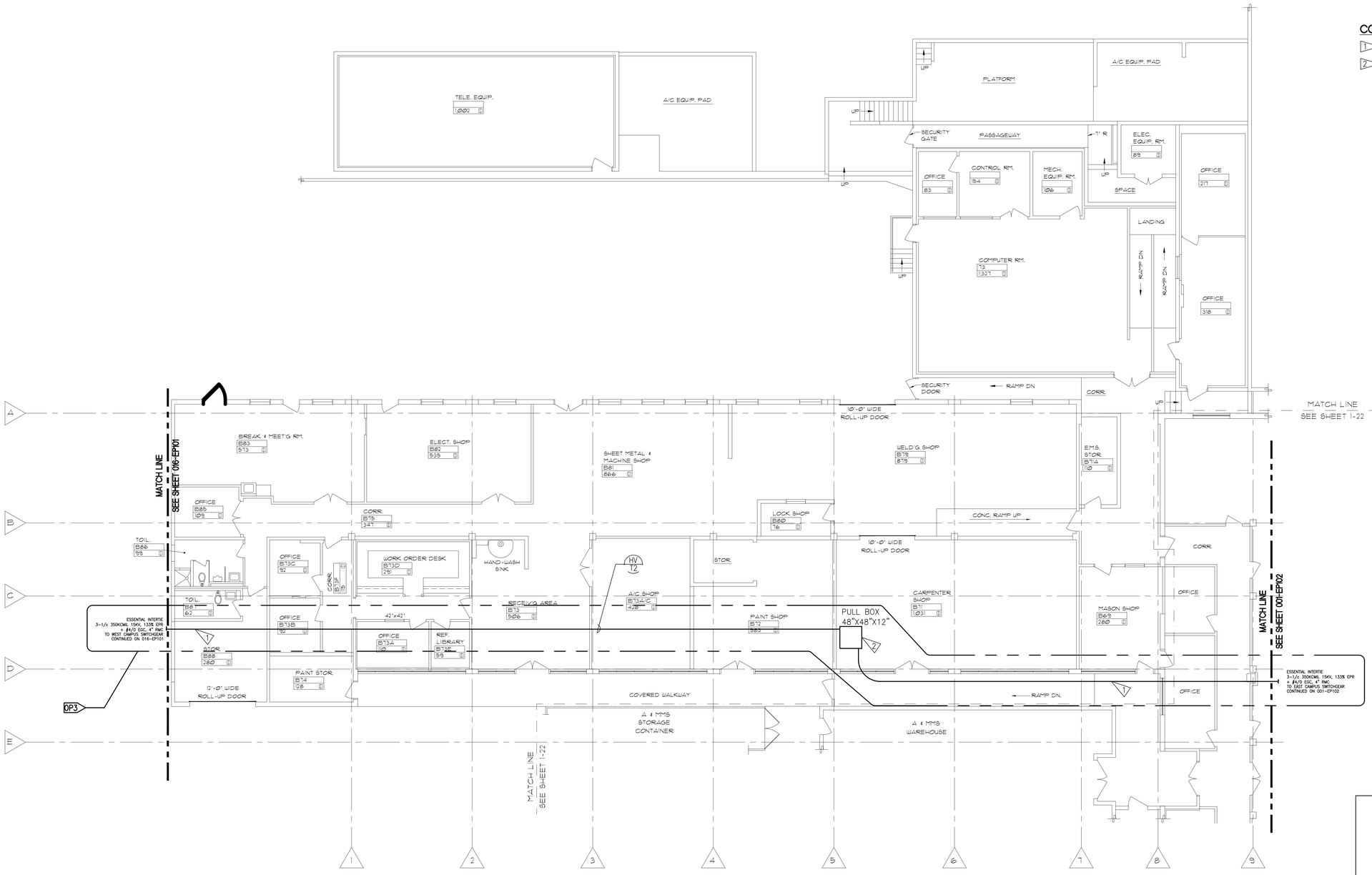

BUILDING 1

BASEMENT - NORTH-WEST WING - SHOPS & COMPUTER BLDG.

SCALE: 1/8" = 1'-0"

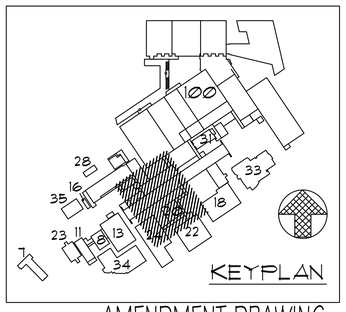

SCALE: 1/8" = 1'-0"

AMENDMENT DRAWING

NEW DRAWING

Revisions	Date
-	-
-	-
-	-
-	-
-	-
-	-
-	-
-	-
-	-
-	-

CONSULTANTS:

SÄZÄN GROUP
600 Stewart St., Ste 1400
Seattle, Washington 98101
Tel 206.267.1700
Fax 206.267.1701
SAZAN # 269-1507

Drawing Title: BASEMENT WEST FLOOR PLAN

Approved Project Director: - - VAPAHCS PLANNING AND ENGINEERING

Project Title: VA PUGET SOUND HEALTH CARE SYSTEM UPGRADE SEATTLE ELECTRICAL DISTRIBUTION FROM 5kV TO 15kV

Location: 1660 South Columbian Way, Seattle, WA 98108

Date: 04-01-2016 | Checked: K.ANDERSON | Drawn: A.WOOLF

Project Number: 663-15-102

Building Number: 001

Drawing Number: 001-EP103

Dwg -- of --

Office of Construction and Facilities Management

Department of Veterans Affairs

VA FORM 08-6231

P:\269-1507 VAMC Seattle 5kV to 15kV Upgrade\DWG\ELEC\001-EP103.dwg 3-30-16 10:59:57 AM cpeters

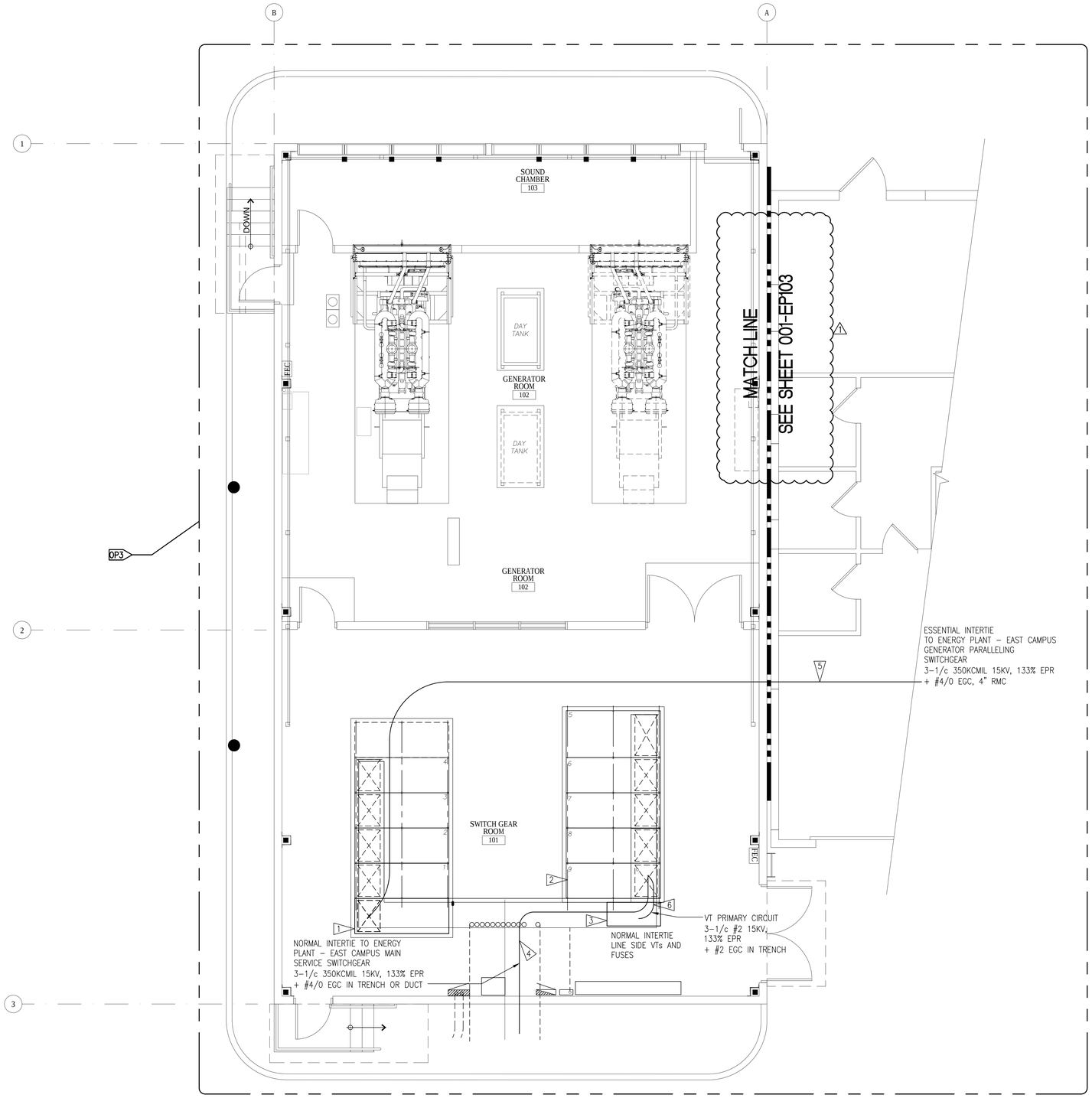

CONSTRUCTION NOTES:

1. PROVIDE AND INSTALL NEW SWITCHGEAR SECTION. EXTEND BUS FROM ADJACENT SECTION TO NEW SECTION.
2. INSTALL NEW BREAKER, CURRENT TRANSFORMERS AND RELAY IN SPARE CUBICLE OF EXISTING SECTION.
3. PROVIDE AND INSTALL VOLTAGE TRANSFORMER CABINET WITH PRIMARY FUSES. INSTALL TRANSFORMER SECONDARY CONNECTIONS TO NEW RELAY IN ADJACENT CABINET.
4. INSTALL NEW 15KV FEEDER IN EXISTING TRENCH, AND SPARE DUCT TO MANHOLE H.
5. INSTALL NEW 15KV FEEDER AS SHOWN.
6. INSTALL VOLTAGE TRANSFORMER PRIMARY CONNECTION IN TRENCH. TERMINATE AT BREAKER LUGS.
7. LABEL TAP BOX AND VOLTAGE TRANSFORMER CABINET WITH "DO NOT OPEN WHILE NORMAL INTERTIE FEEDER IS ENERGIZED."

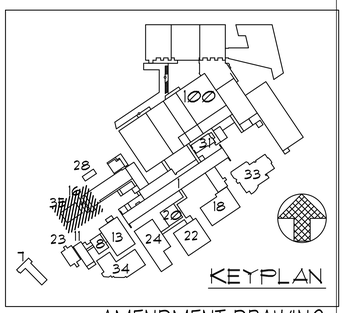

AMENDMENT DRAWING

SUPERSEDES 016-EP101

Revisions	Date
-	-
-	-
-	-
-	-
-	-
-	-
-	-
-	-
-	-

CONSULTANTS:

SÄZÄN GROUP
600 Stewart St., Ste 1400
Seattle, Washington 98101
Tel 206.267.1700
Fax 206.267.1701
SAZAN # 269-1507

Drawing Title: WEST CAMPUS ELECTRICAL BUILDING PLAN - POWER

Approved: Project Director: VAPAHCS PLANNING AND ENGINEERING

Project Title: VA PUGET SOUND HEALTH CARE SYSTEM UPGRADE SEATTLE ELECTRICAL DISTRIBUTION FROM 5kV TO 15kV

Location: 1660 South Columbian Way, Seattle, WA 98108

Date: 02-25-2016 | Checked: K.ANDERSON | Drawn: A.WOOLF

Project Number: 663-15-102

Building Number: B16

Drawing Number: 016-EP101R

Dwg. -- of --

Office of Construction and Facilities Management

Department of Veterans Affairs

VA FORM 08-6231

P:\269-1507 VAMC Seattle 5kV to 15kV Upgrade\DWG\ELEC\016-EP101.dwg 3-30-16 11:00:08 AM cpeters

GENERAL NOTES:

1. REFER TO ES800 FOR FEEDER SCHEDULE.

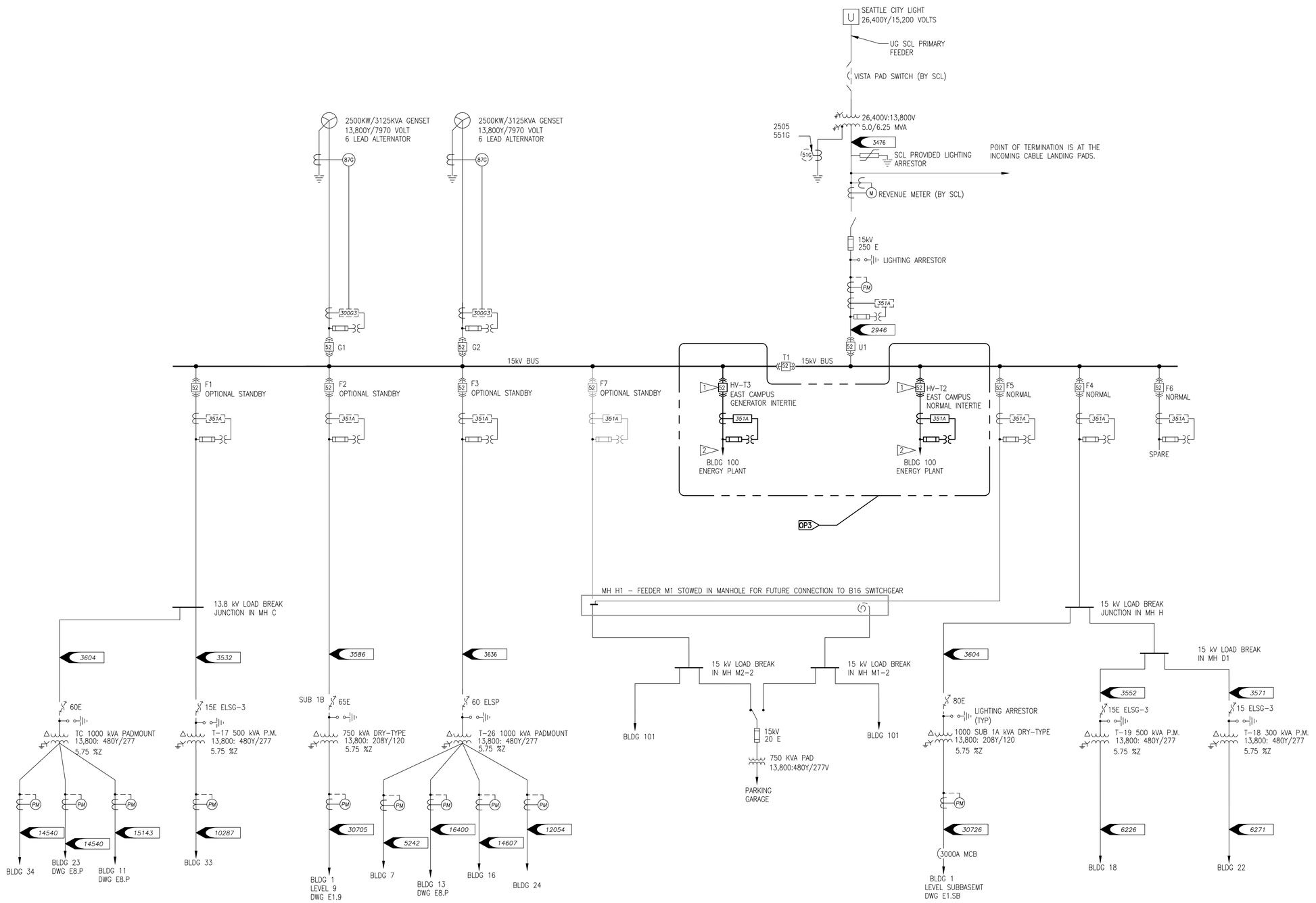

CONSTRUCTION NOTES:

1. INSTALL NEW BREAKER.
2. INSTALL NEW 15KV FEEDER.

LEGEND:

- (32) REVERSE POWER RELAY
- (40) LOSS OF EXCITATION
- (51V) BACKUP OVERCURRENT
- (51G) GROUND OVERCURRENT RELAY
- (50/51) TIME–OVERCURRENT/INSTANTANEOUS OVERCURRENT RELAY
- (50G) GROUND FAULT PROTECTION RELAY
- [52] AC CIRCUIT BREAKER
- (87) DIFFERENTIAL RELAY
- (PM) POWER MONITOR, SQUARE D POWER LOGIC
- SCL — SEATTLE CITY LIGHT
- [XXXX] — PROTECTIVE RELAY SEL NUMBER
- (67) DIRECTIONAL OVERCURRENT
- (81) FREQUENCY
- [F.O.] — FIBER OPTIC TRANSCEIVER
- — · — 62.5/125 MULTI–MODE, 4–STRAND TIGHT–BUFFERED FIBER OPTIC CABLE WITH UV RESISTANT JACKETED AND NO METALLIC ELEMENTS. 2–STRANDS TERMINATED IN ST CONNECTORS, 2 STRANDS SPARE.

AMENDMENT DRAWING

SUPERSEDES 016-EP601

Revisions	Date
-	-
-	-
-	-
-	-
-	-
-	-
-	-
-	-
REVISION 1	04-01-16

CONSULTANTS:

SÄZÄN GROUP
600 Stewart St., Ste 1400
Seattle, Washington 98101
Tel 206.267.1700
Fax 206.267.1701
SAZAN # 269-1507

Drawing Title: ONE LINE DIAGRAM WEST CAMPUS 15KV DISTRIBUTION

Approved: Project Director: VAPAHCS PLANNING AND ENGINEERING

Project Title: VA PUGET SOUND HEALTH CARE SYSTEM UPGRADE SEATTLE ELECTRICAL DISTRIBUTION FROM 5kV TO 15kV

Location: 1660 South Columbian Way, Seattle, WA 98108

Date: 02-25-2016 | Checked: K.ANDERSON | Drawn: A.WOOLF

Project Number: 663-15-102

Building Number: B16

Drawing Number: 016-EP601R

Dwg. -- of --

Office of Construction and Facilities Management

Department of Veterans Affairs

VA FORM 08-6231

P:\269-1507 VAMC Seattle 5kV to 15kV Upgrade\DWG\ELEC\016-EP601.dwg 3-30-16 11:00:17 AM cpeters

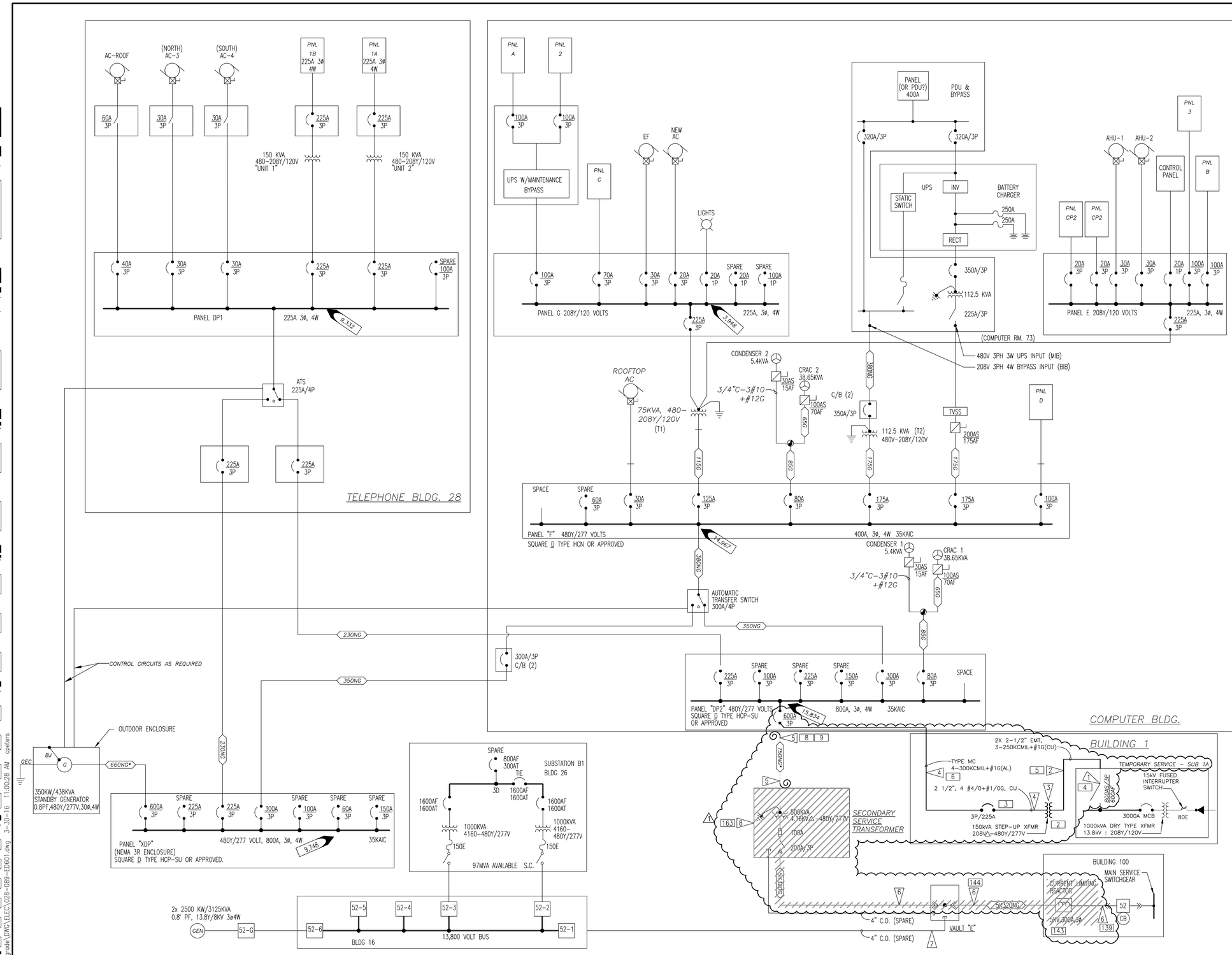

CONSTRUCTION NOTES:

1. RE-FUSE SPARE SWITCH, SEE DWG B01-EP101.
2. NEW 208V FEEDER.
3. PROVIDE 150KVA STEP-UP TRANSFORMER.
4. NEW 480KV FEEDER TO BLDG 28/89.
5. DISCONNECT EXISTING 480 FEEDER, PROTECT FOR RE-USE.
6. REMOVE 5KV FEEDER CONDUCTORS.
7. REMOVE 5KV FEEDER CONDUCTORS IF PRESENT BETWEEN MANHOLE "E" AND MANHOLE "H"
8. REMOVE TRANSFORMER.

NOTES:

1. ### TASK IDENTIFICATION - SEE SEQUENCE OF CONSTRUCTION ON SHEET ES003 AND ES004.
   2 3 4 5 6 8 9 139 143 144 163

AMENDMENT DRAWING

SUPERSEDES 028 89-ED601

Revisions:	Date
-	-
-	-
-	-
-	-
-	-
-	-
-	-
-	-
-	-

CONSULTANTS:

SÄZÄN GROUP
600 Stewart St., Ste 1400
Seattle, Washington 98101
Tel 206.267.1700
Fax 206.267.1701
SAZAN # 269-1507

Drawing Title: SEQUENCE OF CONSTRUCTION PARTIAL ONE-LINE DIAGRAM DEMOLITION

Approved Project Director: - - VAPAHCS PLANNING AND ENGINEERING

Project Title: VA PUGET SOUND HEALTH CARE SYSTEM UPGRADE SEATTLE ELECTRICAL DISTRIBUTION FROM 5kV TO 15kV

Location: 1660 South Columbian Way, Seattle, WA 98108

Date: 02-25-2016 | Checked: K.ANDERSON | Drawn: A.WOOLF

Project Number: 663-15-102

Building Number: B28 + B29

Drawing Number: 028 89-ED601R

Dwg. -- of --

Office of Construction and Facilities Management

Department of Veterans Affairs

VA FORM 08-6231

P:\269-1507 VAMC Seattle 5kV to 15kV Upgrade\DWG\ELEC\028-089-ED601.dwg 3-30-16 11:00:28 AM cpeters

PARTIAL SITE PLAN - NEW UTILITY + STANDBY SERVICE BLDG 28 AND COMPUTER BLDG

1

SCALE: 1" = 20' - 0"

GENERAL NOTES:

1. REFER TO DRAWING ES800 FOR FEEDER SCHEDULE.
2. THE CONTRACTOR SHALL FOLLOW THE STANDARD VA–HOSPITAL LOCKOUT/TAGOUT PROCEDURES THROUGHOUT THE SHUTDOWN, REMOVAL, NEW WORK AND TEMPORARY DISCONNECTION AND RECONNECTION PROCESS.

CONSTRUCTION NOTES:

1. REMOVE 5KV CONDUCTORS. PROVIDE (2) 15KV FEEDERS PER FEEDER SCHEDULE, BETWEEN BUILDING 100 AND MH–E.
2. REPLACE 500KVA 4160V – 480Y/277V TRANSFORMER WITH 500KVA 13.8KV – 480Y/277V TRANSFORMER.
3. REMOVE 5KV CONDUCTORS. PROVIDE (1) 15KV FEEDER PER FEEDER SCHEDULE.

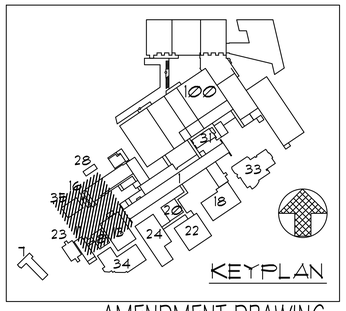

AMENDMENT DRAWING

SUPERSEDES 028 89-ES101

–	–
–	–
–	–
–	–
–	–
–	–
–	–
–	–
REVISION 1	04-01-16
Revisions:	Date

CONSULTANTS:

SÄZÄN GROUP
600 Stewart St., Ste 1400
Seattle, Washington 98101
Tel 206.267.1700
Fax 206.267.1701
SAZAN # 269-1507

Drawing Title: PARTIAL SITE PLAN BUILDING 28 AND COMPUTER BLDG.. NEW UTILITY + STANDBY SERVICES

Approved Project Director: – – VAPAHCS PLANNING AND ENGINEERING

Project Title: VA PUGET SOUND HEALTH CARE SYSTEM UPGRADE SEATTLE ELECTRICAL DISTRIBUTION FROM 5kV TO 15kV

Location: 1660 South Columbian Way, Seattle, WA 98108

Date: 02-25-2016 | Checked: A. WOOLF | Drawn: S. LIM

Project Number: 663-15-102

Building Number: B28-B29

Drawing Number: 028 89-ES101R

Dwg. -- of --

Office of Construction and Facilities Management

Department of Veterans Affairs

VA FORM 08-6231

P:\269-1507 VAMC Seattle 5kV to 15kV Upgrade\DWG\ELEC\028-089-ES101.dwg 3-30-16 11:00:38 AM cpeters

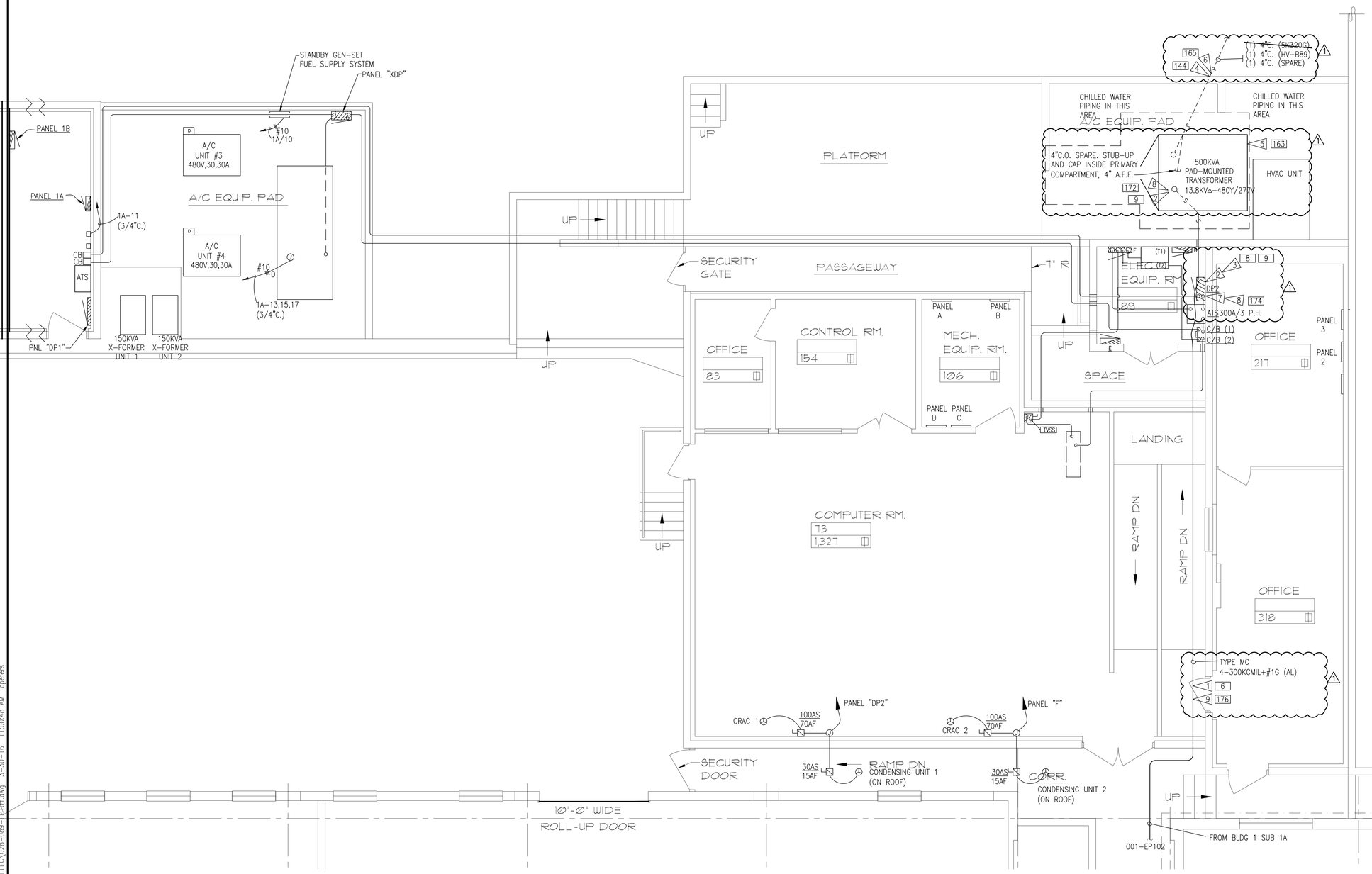

NOTES:

1 ### TASK IDENTIFICATION – SEE SEQUENCE OF CONSTRUCTION ON SHEET ES004.
6 8 9 144 163 165 172 174 176

CONSTRUCTION NOTES:

1 INSTALL TEMPORARY FEEDER FROM BLDG 1 SUB 1A. SEE DWG 001-EP102.

2 DISCONNECT EXISTING SUPPLY FEEDER. PROTECT FOR RE-USE.

3 CONNECT TEMPORARY FEEDER TO PANEL DP2.

4 REMOVE 5KV FEEDER. SEE DWG 028 89-ES101.

5 REPLACE TRANSFORMER WITH 500KVA 13.8KV – 480Y/277V TRANSFORMER.

1 6 INSTALL NEW 15KV FEEDER IN EXISTING RACEWAY.

7 DISCONNECT TEMPORARY FEEDER FROM PANEL DP2.

8 CONNECT SUPPLY FEEDER TO EQUIPMENT.

1 9 REMOVE TEMPORARY FEEDER BACK TO SUB 1A.

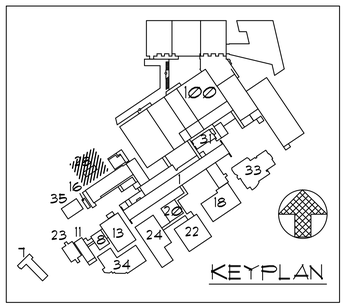

PARTIAL FLOOR PLAN - POWER DISTRIBUTION BLDG 28 AND COMPUTER BLDG

1

SCALE: 1/4" = 1' - 0"

AMENDMENT DRAWING

SUPERSEDES 028 89-EP101

Revisions:	Date
REVISION 1	04-01-16

CONSULTANTS:

SAZAN GROUP
600 Stewart St., Ste 1400
Seattle, Washington 98101
Tel 206.267.1700
Fax 206.267.1701
SAZAN # 269-1507

Drawing Title: PARTIAL FLOOR PLANS- POWER DISTRUBITION BUILDING 28 AND COMPUTER BUILDING

Approved Project Director: - - VAPAHCS PLANNING AND ENGINEERING

Project Title: VA PUGET SOUND HEALTH CARE SYSTEM UPGRADE SEATTLE ELECTRICAL DISTRIBUTION FROM 5kV TO 15kV

Location: 1660 South Columbian Way, Seattle, WA 98108

Date: 02-25-2016 | Checked: A. WOOLF | Drawn: S. LIM

Project Number: 663-15-102

Building Number: B28 + B89

Drawing Number: 028 89-EP101R

Dwg. -- of --

Office of Construction and Facilities Management

Department of Veterans Affairs

VA FORM 08-6231

P:\269-1507 VAMC Seattle 5kV to 15kV Upgrade\DWG\ELEC\028-089-EP101.dwg 3-30-16 11:00:48 AM cpeters

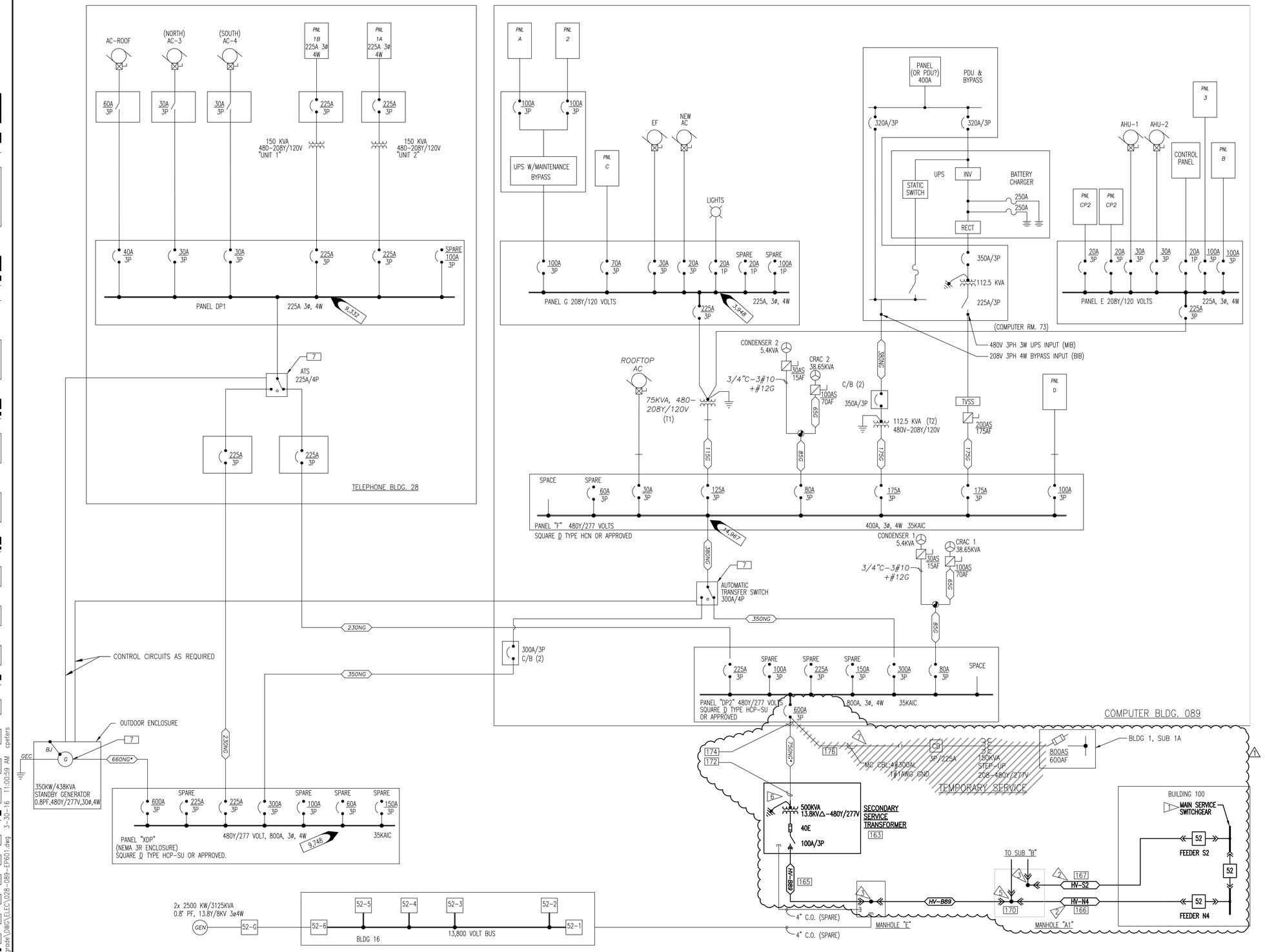

GENERAL NOTES:

1. REFER TO SHEETS ES800 AND ES801 FOR FEEDER SCHEDULES.

NOTES:

TASK IDENTIFICATION – SEE SEQUENCE OF CONSTRUCTION ON SHEET ES004.

163 165 166 167 170 172 174 176

CONSTRUCTION NOTES:

1. NEW MAIN SWITCHGEAR, SEE DWG 100-EP601.
2. NEW FEEDER TO SUB B, SEE DWG 100-EP601.
3. PROVIDE NON-LOAD BREAK 600A 2-WAY CONNECTION IN MANHOLE INCLUDING REQUIRED ACCESSORIES.
4. NEW 15KV FEEDER TO BLDG 28 AND 89.
5. PROVIDE NON-LOAD BREAK 600A 3-WAY CONNECTION IN MANHOLE INCLUDING REQUIRED ACCESSORIES.
6. PROVIDE NEW TRANSFORMER WITH FUSES AND ACCESSORIES AS SHOWN.
7. AFTER BUILDING 89 IS TRANSFERRED TO NEW PERMANENT SUPPLY, REMOVE TEMPORARY FEEDERS AND EQUIPMENT BACK TO BUILDING 1 SUB 1A.

AMENDMENT DRAWING

SUPERSEDES 028 89-EP601

Revisions:	Date
REVISION 1	04-01-16

CONSULTANTS:

SÄZÄN GROUP
600 Stewart St., Ste 1400
Seattle, Washington 98101
Tel 206.267.1700
Fax 206.267.1701
SAZAN # 269-1507

Drawing Title: PARTIAL ONE-LINE DIAGRAM- NEW WORK

Approved Project Director: - - VAPAHCS PLANNING AND ENGINEERING

Project Title: VA PUGET SOUND HEALTH CARE SYSTEM UPGRADE SEATTLE ELECTRICAL DISTRIBUTION FROM 5kV TO 15kV

Location: 1660 South Columbian Way, Seattle, WA 98108

Date: 02-25-2016 | Checked: A. WOOLF | Drawn: S. LIM

Project Number: 663-15-102

Building Number: B28 + B89

Drawing Number: 028 89-EP601R

Dwg. -- of --

Office of Construction and Facilities Management

Department of Veterans Affairs

VA FORM 08-6231

P:\269-1507 VAMC Seattle 5kV to 15kV Upgrade\DWG\ELEC\028-089-EP601.dwg 3-30-16 11:00:59 AM cpeters