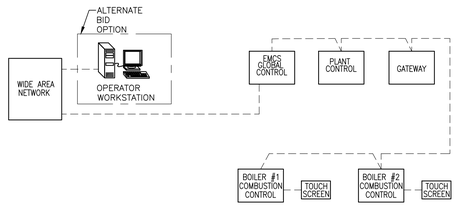

NOTE:
IF NEW EMCS SYSTEM IS CHOSEN ALL EXISTING POINTS ARE TO BE MAPPED BACK TO WORKSTATION.

1 CONTROL NETWORK DIAGRAM

NTS

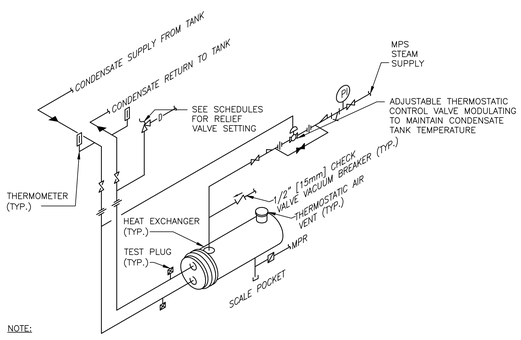

NOTE:

1. THE ABOVE DETAIL SHOWS REQUIRED PIPING FOR A SINGLE HEAT EXCHANGER..
2. PROVIDE SADDLE SUPPORTS AND LEGS OR HANGERS FOR HEAT EXCHANGER. MOUNTING HEIGHT SHALL BE ADJUSTED TO FACILITATE GRAVITY RETURN OF STEAM CONDENSATE.
3. MAKE THE BYPASS THE SAME SIZE AS THE CONNECTIONS TO THE CONTROL VALVES.

3 HEAT EXCHANGER - STEAM TO HOT WATER

NTS

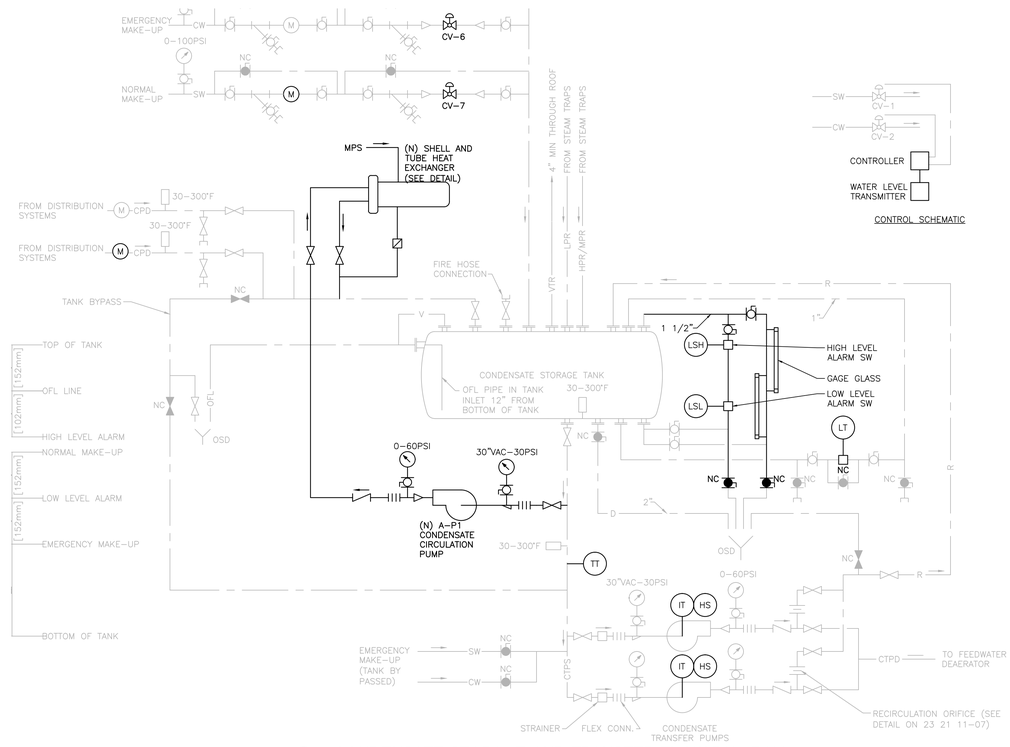

2 CONDENSATE STORAGE AND TRANSFER FLOW DIAGRAM

NTS

DESIGN DEVELOPMENT - NOT FOR CONSTRUCTION

Revisions:	Date

CONSULTANTS:

ARCHITECT/ENGINEERS:

GLHN ARCHITECTS & ENGINEERS, INC.
2939 E. Broadway Blvd. Tucson, Arizona 85716
PH: 520-881- 4546 FAX: 520-795-1822 glhn.com

COPYRIGHT 2010 GLHN ARCHITECTS & ENGINEERS, INC. ALL RIGHTS RESERVED

Drawing Title: MECHANICAL DETAILS

Approved Project Director:

Project Title: MIAMI UTILITY PLANT CORRECTIONS

Location: MIAMI UTILITY PLANT

Date: 08-05-11 | Checked: HWJ | Drawn: WMK

Project Number: 0555.118

Building Number: G/A

Drawing Number: MJ504

Dwg. -- of --

Office of Construction and Facilities Management

Department of Veterans Affairs

VA FORM 08-6231