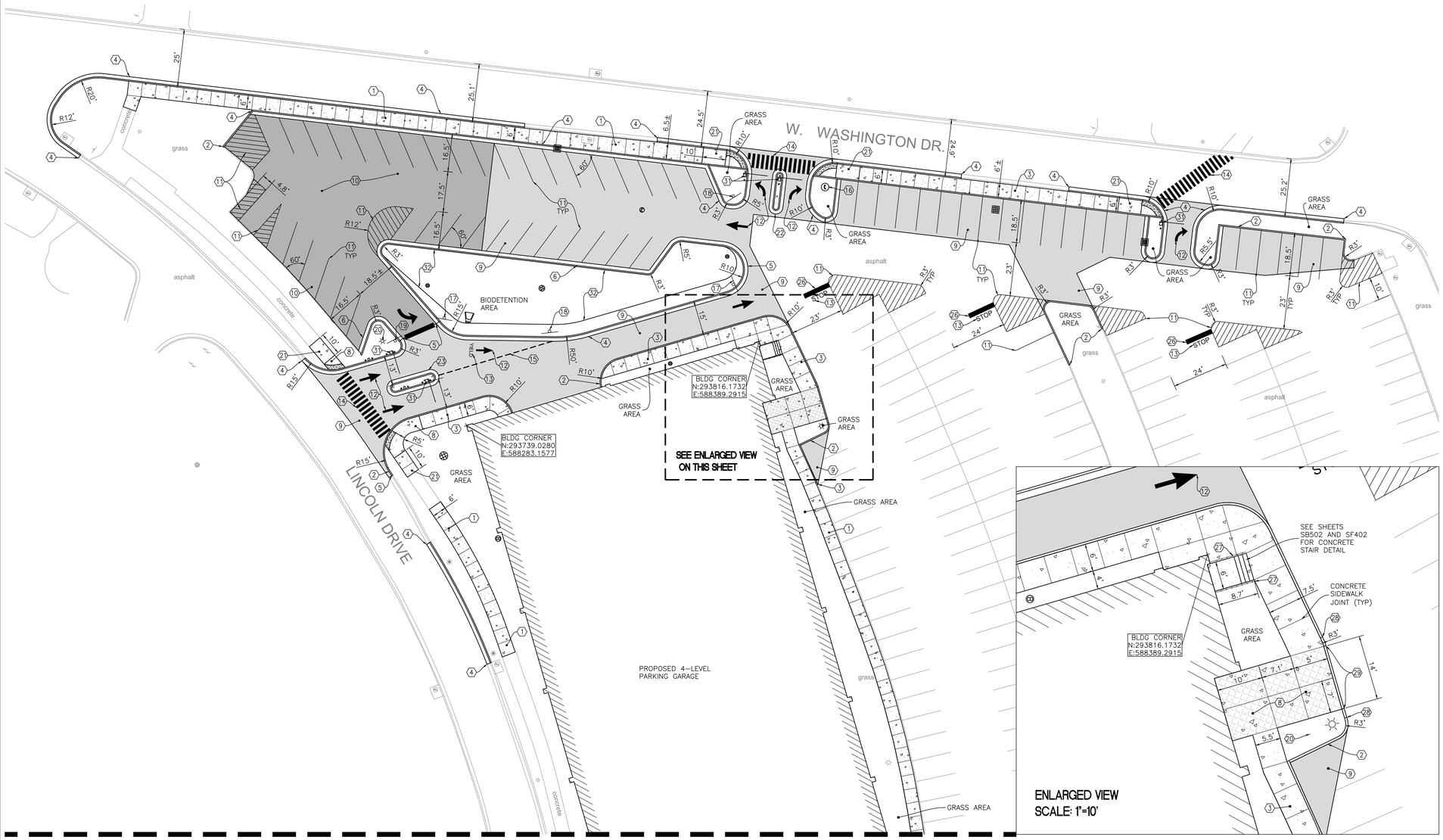

MATCHLINE – CONTINUE ON SHEET CS102

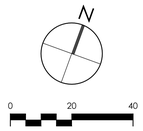

SITE KEYNOTES

1. CONCRETE SIDEWALK
2. CONCRETE CURB
3. INTEGRAL CONCRETE WALK AND CURB
4. CONCRETE CURB AND GUTTER
5. CURB TYPE TRANSITION
6. REVERSE CONCRETE CURB AND GUTTER
7. MOUNTABLE CONCRETE CURB (NOT USED)
8. CONCRETE PAVEMENT
9. ASPHALT PAVEMENT
10. ASPHALT 1.5" MILL AND RESURFACE
11. PARKING STRIPING, 4 INCH WIDE, PAINTED, WHITE
12. TRAFFIC ARROW, THERMOPLASTIC, WHITE
13. TRAFFIC TEXT, THERMOPLASTIC, WHITE
14. CROSSWALK, WHITE, THERMOPLASTIC, 6' LONG BY 1' WIDE WITH 2' SPACING
15. TRAFFIC LANE STRIPING, DASHED, 4 INCH WIDE, PAINTED, WHITE
16. RELOCATED BLUE EMERGENCY LIGHT PHONE (SEE ELECTRICAL PLANS)
17. DO NOT ENTER SIGN, VA SIGN GUIDE: EN-10.02
18. ONE WAY SIGN, VA SIGN GUIDE: EN-10.06
19. STOP SIGN, VA SIGN GUIDE: EN-10.1
20. RELOCATED LIGHT POLE
21. SIDEWALK CURB RAMP WITH TRUNCATED DOMES
22. 3' CONCRETE MEDIAN, SEE DETAIL ON SHEET CS501 (NOT USED)
23. 4' CONCRETE MEDIAN, SEE DETAIL ON SHEET CS501
24. EMERGENCY ACCESS GATE, SEE SHEETS CS501 AND AP401 (NOT USED)
25. EMERGENCY ACCESS RAIL, SEE SHEETS CS501 AND AP401 (NOT USED)
26. STOP BAR, 2' WIDE, THERMOPLASTIC, WHITE
27. ALUMINUM HANDRAIL
28. CURB TAPER
29. CONCRETE FLUSH CURB
30. ASPHALT PATCH WHERE GATE POST WAS REMOVED
31. ACCESS CONTROL GATE, SEE SHEET AP401
32. BIODETENTION AREA LIMITS

LEGEND

- ASPHALT PAVEMENT
- CONCRETE SIDEWALK
- ASPHALT PAVEMENT RESURFACE
- CONCRETE PAVEMENT

Revisions:	Date

VA U.S. Department of Veterans Affairs

VAMC MILWAUKEE
5000 W. National Ave. Milwaukee, WI 53295

ARCHITECT/ENGINEERS:

PROJECT LEAD
Architect, Structural Engineer, Civil Engineer
GUIDON DESIGN
905 N. CAPITOL AVE. SUITE 100 INDIANAPOLIS, IN. 46204
317.800.6388 WWW.GUIDONDESIGN.COM
SUSTAINABLE ARCHITECTURE + ENGINEERING

MEP Engineer
APOGEE CONSULTING GROUP
1151 Kildaire Farm Road, Suite 120
Cary, NC 27511
Tele: 919-858-7420

Functional Design
CARL WALKER INC.
11920 S. Highland Ave. Suite 2107
Lombard, IL 60148
Tele: 630-307-3800

BID SET

Drawing Title	Project Title	Project Number	OFFICE OF FACILITIES MANAGEMENT
SITE PLAN	PARKING STRUCTURE LOT 7	14.1020.02	
		Building Number #152	
Approved for Design Concept: FACILITY MANAGEMENT DIVISION MANAGER	Location CLEMENT J ZABLOCKI VAMC	Drawing Number CS101	VA Project Number 695-325
	Date 12/01/2015 / Checked By: KJC / Drawn By: DWC		VA U.S. Department of Veterans Affairs

C:\Users\edecina\Documents\GD_REVIT_LOCALS\14.1020-A_MVA-Garage_evan.rvt

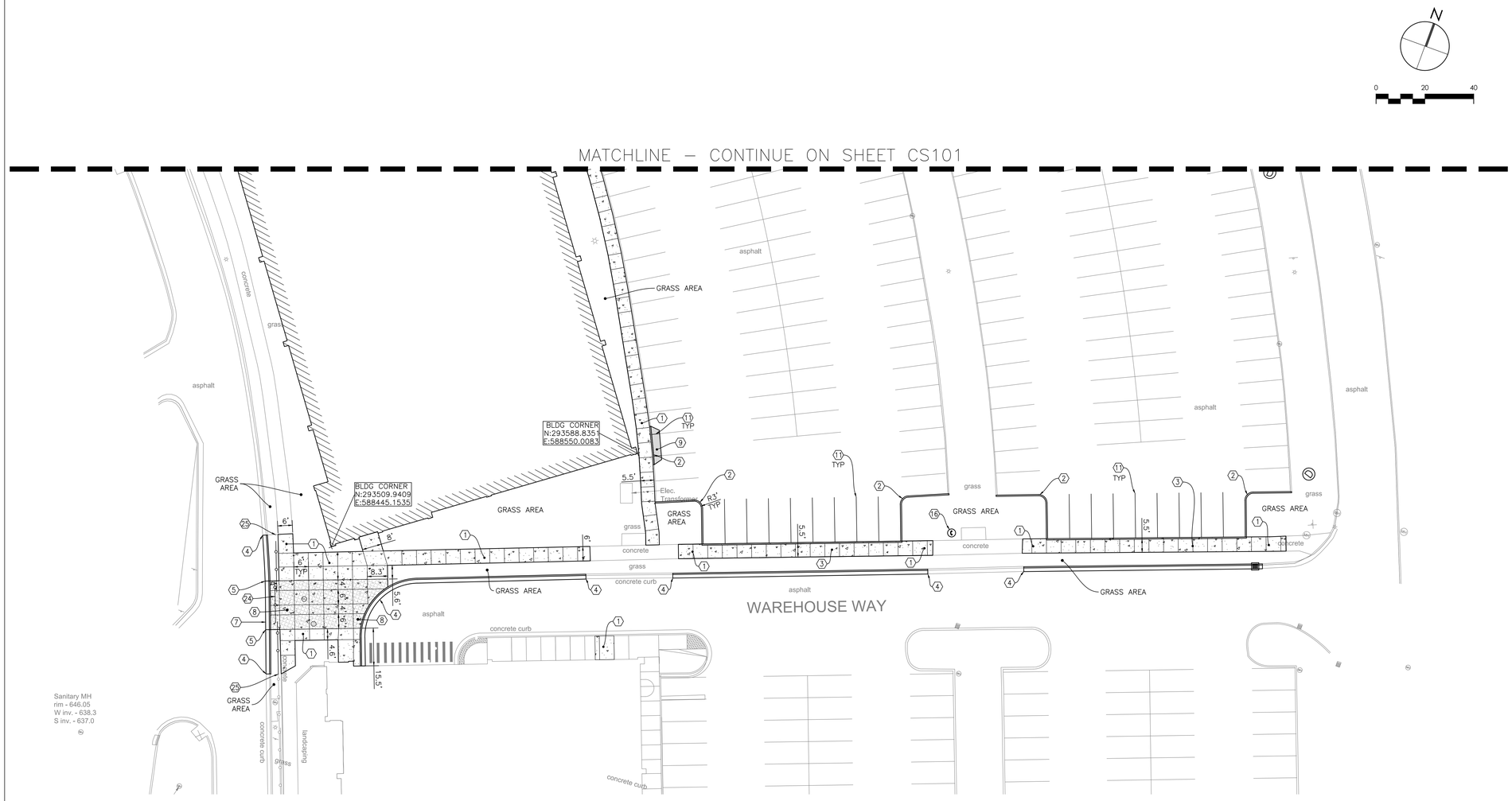

SITE KEYNOTES

1. CONCRETE SIDEWALK
2. CONCRETE CURB
3. INTEGRAL CONCRETE WALK AND CURB
4. CONCRETE CURB AND GUTTER
5. CURB TYPE TRANSITION
6. REVERSE CONCRETE CURB AND GUTTER (NOT USED)
7. MOUNTABLE CONCRETE CURB
8. CONCRETE PAVEMENT (NOT USED)
9. ASPHALT PAVEMENT
10. ASPHALT 1.5" MILL AND RESURFACE (NOT USED)
11. PARKING STRIPING, 4 INCH WIDE, PAINTED, WHITE
12. TRAFFIC ARROW, THERMOPLASTIC, WHITE (NOT USED)
13. TRAFFIC TEXT, THERMOPLASTIC, WHITE (NOT USED)
14. CROSSWALK, WHITE, THERMOPLASTIC, 6' LONG BY 1' WIDE WITH 2' SPACING (NOT USED)
15. TRAFFIC LANE STRIPING, DASHED, 4 INCH WIDE, PAINTED, WHITE (NOT USED)
16. RELOCATED BLUE EMERGENCY LIGHT PHONE (SEE ELECTRICAL PLANS)
17. DO NOT ENTER SIGN, VA SIGN GUIDE: EN-(NOT USED)
18. ONE WAY SIGN, VA SIGN GUIDE: EN-(NOT USED)
19. STOP SIGN, VA SIGN GUIDE: EN-(NOT USED)
20. RELOCATED LIGHT POLE (NOT USED)
21. SIDEWALK CURB RAMP WITH TRUNCATED DOMES (NOT USED)
22. 3' CONCRETE MEDIAN, SEE DETAIL ON SHEET CS501 (NOT USED)
23. 4' CONCRETE MEDIAN, SEE DETAIL ON SHEET CS501 (NOT USED)
24. EMERGENCY ACCESS GATE, SEE SHEETS CS501 AND AP401
25. EMERGENCY ACCESS RAIL, SEE SHEETS CS501 AND AP401
26. STOP BAR, 2' WIDE, THERMOPLASTIC, WHITE
27. ALUMINUM HANDRAIL
28. CURB TAPER (NOT USED)
29. CONCRETE FLUSH CURB (NOT USED)
30. ASPHALT PATCH WHERE GATE POST WAS REMOVED
31. ACCESS CONTROL GATE, SEE SHEET AP401
32. BIODETENTION AREA LIMITS

LEGEND

- ASPHALT PAVEMENT
- CONCRETE SIDEWALK
- ASPHALT PAVEMENT RESURFACE
- CONCRETE PAVEMENT

Revisions: Date

VA U.S. Department of Veterans Affairs

VAMC MILWAUKEE
5000 W. National Ave. Milwaukee, WI 53295

LUKE J LEISING 43897-6 INDIANAPOLIS, IN

ARCHITECT/ENGINEERS:

PROJECT LEAD
Architect, Structural Engineer, Civil Engineer
GUIDON DESIGN
905 N. CAPITOL AVE. SUITE 100 INDIANAPOLIS, IN. 46204
317.800.6388 WWW.GUIDONDESIGN.COM
SUSTAINABLE ARCHITECTURE + ENGINEERING

MEP Engineer
APOGEE CONSULTING GROUP
1151 Kildaire Farm Road, Suite 120
Cary, NC 27511
Tele: 919-858-7420

Functional Design
CARL WALKER INC.
11920 S. Highland Ave. Suite 2107
Lombard, IL 60148
Tele: 630-307-3800

BID SET

Drawing Title: SITE PLAN	Project Title: PARKING STRUCTURE LOT 7	Project Number: 14.1020.02	OFFICE OF FACILITIES MANAGEMENT
		Building Number: #152	
Approved for Design Concept: FACILITY MANAGEMENT DIVISION MANAGER	Location: CLEMENT J ZABLOCKI VAMC	Drawing Number: CS102	VA Project Number: 695-325
	Date: 12/01/2015 · Checked By: KJC · Drawn By: DWC		VA U.S. Department of Veterans Affairs

C:\Users\ieldevra\Documents\GD_REVIT_LOCALS\14.1020-A_MVA-Garage_evan.rvt

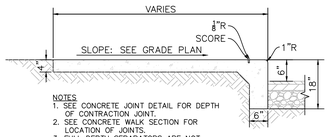

NOTES
1. SEE CONCRETE JOINT DETAIL FOR DEPTH OF CONTRACTION JOINT.
2. SEE CONCRETE WALK SECTION FOR LOCATION OF JOINTS.
3. FULL DEPTH SEPARATORS ARE NOT PERMITTED EXCEPT AT EXP. JOINTS.

INTEGRAL WALK AND CURB
N.T.S.

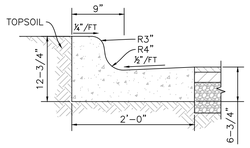

NOTE:
EXPANSION JOINT REQ'D AT CHANGES IN DIRECTION AND CONTRACTION JOINTS EVERY 20'-0"

CONCRETE CURB AND GUTTER
NTS

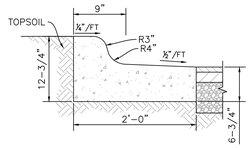

NOTE:
EXPANSION JOINT REQ'D AT CHANGES IN DIRECTION AND CONTRACTION JOINTS EVERY 20'-0"

REVERSE CONCRETE CURB AND GUTTER
NTS

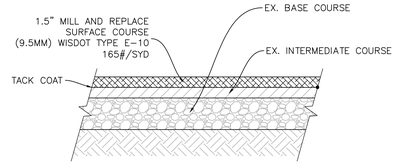

MILL AND RESURFACE PAVEMENT SECTION
NTS

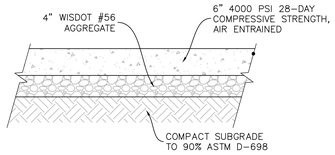

CONCRETE PAVEMENT SECTION
NTS

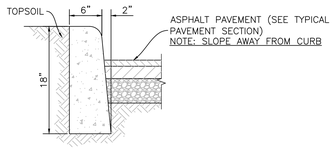

CONCRETE CURB
NTS

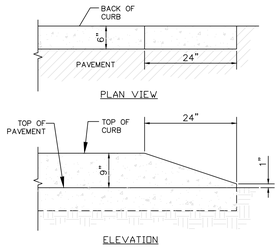

CURB TAPER
N.T.S.

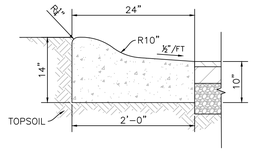

NOTE:
EXPANSION JOINT REQ'D AT CHANGES IN DIRECTION AND CONTRACTION JOINTS EVERY 20'-0"

MOUNTABLE CONCRETE CURB AND GUTTER
NTS

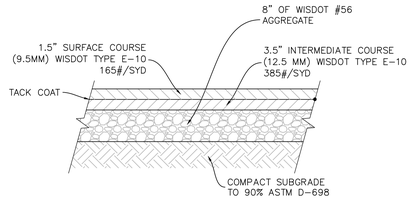

TYPICAL PAVEMENT SECTION
NTS

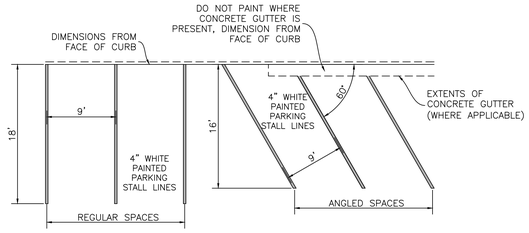

NOTES
1. DIMENSIONS ARE SHOWN CENTER TO CENTER OF 4" WHITE PAINTED LINE MARKINGS.
2. SEE SITE PLANS FOR PARKING BAY AND DRIVE ISLE WIDTHS.

PARKING STALL LAYOUT
NTS

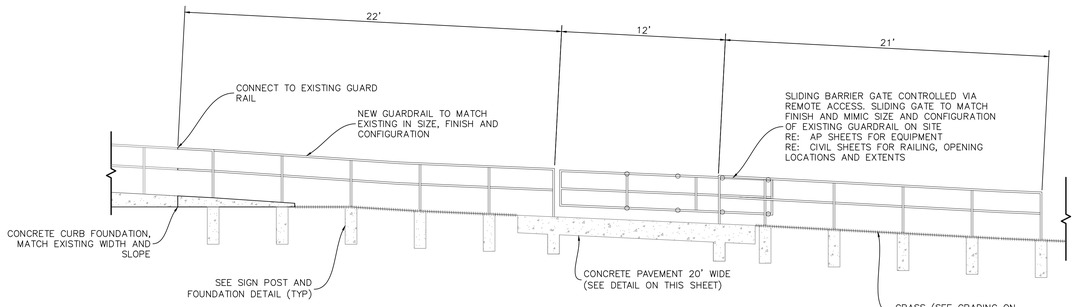

EMERGENCY ACCESS RAIL AND GATE ELEVATION
NTS

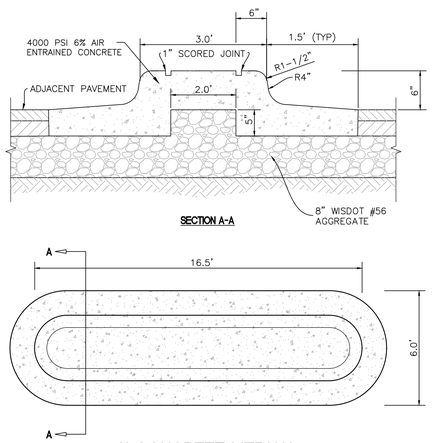

3' CONCRETE MEDIAN
NTS

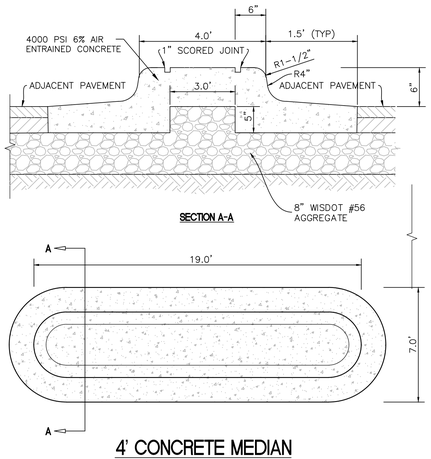

4' CONCRETE MEDIAN
NTS

Revisions:	Date

VA | U.S. Department of Veterans Affairs

VAMC MILWAUKEE
5000 W. National Ave. Milwaukee, WI 53295

WISCONSIN REGISTERED ARCHITECT LUKE J LEISING E-43897 INDIANAPOLIS, IN

ARCHITECT/ENGINEERS:

PROJECT LEAD
Architect, Structural Engineer, Civil Engineer
GUIDON DESIGN
905 N. CAPITOL AVE. SUITE 100 INDIANAPOLIS, IN. 46204
317.800.6388 WWW.GUIDONDESIGN.COM
SUSTAINABLE ARCHITECTURE + ENGINEERING

MEP Engineer
APOGEE CONSULTING GROUP
1151 Kildaire Farm Road, Suite 120
Cary, NC 27511
Tele: 919-858-7420

Functional Design
CARL WALKER INC.
11920 S. Highland Ave. Suite 2107
Lombard, IL 60148
Tele: 630-307-3800

BID SET

Drawing Title	Project Title	Project Number	OFFICE OF FACILITIES MANAGEMENT
SITE DETAILS	PARKING STRUCTURE LOT 7	14.1020.02	
		Building Number #152	
Approved for Design Concept: FACILITY MANAGEMENT DIVISION MANAGER	Location CLEMENT J ZABLOCKI VAMC	Drawing Number CS501	VA Project Number 695-325
	Date 12/01/2015 · Checked By: KJC · Drawn By: DWC		VA | U.S. Department of Veterans Affairs

C:\Users\leisingl\Documents\GD_REVIT_LOCALS\14.1020-A_MVA-Garage_evan.rvt

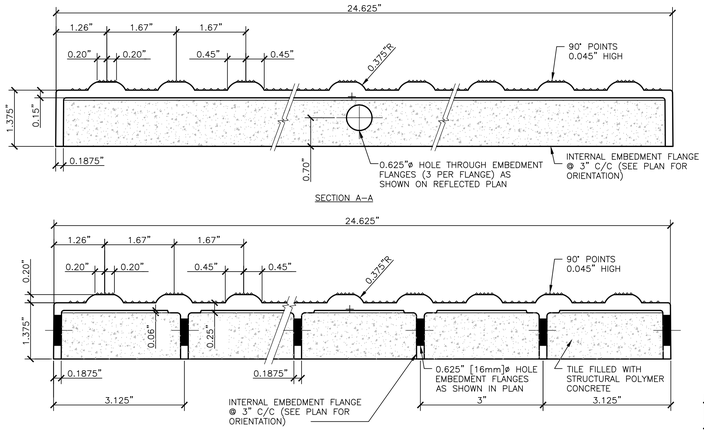

DETECTABLE WARNING NOTES:
THE DETECTABLE WARNING STRIP MUST COVER THE ENTIRE WIDTH OF THE RAMP OPENING, EXCLUDING THE WINGS. ALL DOMES MUST BE ALIGNED IN THE DIRECTION OF TRAVEL. ONE CORNER OF THE LEADING EDGE OF THE DETECTABLE WARNING MAY BE MORE THAN 5 FEET FROM THE BACK OF THE CURB, WHEN LOCATED ALONG A CURB RETURN, THE LEADING EDGE OF THE DETECTABLE WARNING MAY BE DEIFNED BY THE CHORD DRAWN BETWEEN THE LEADING EDGES OF THE RAMP OPENING.

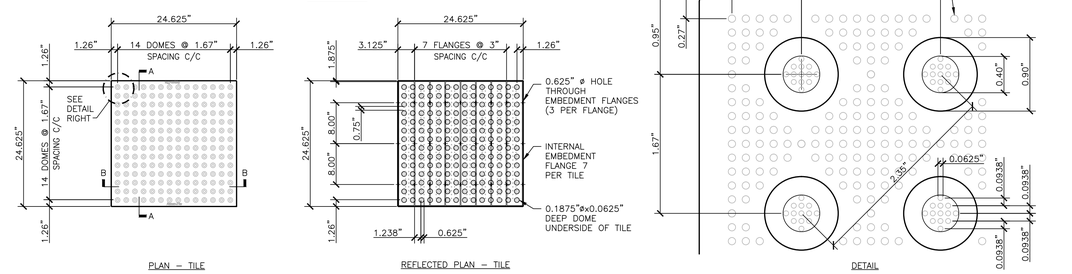

TRUNCATED DOME TACTILE - WARNING STRIP

NTS

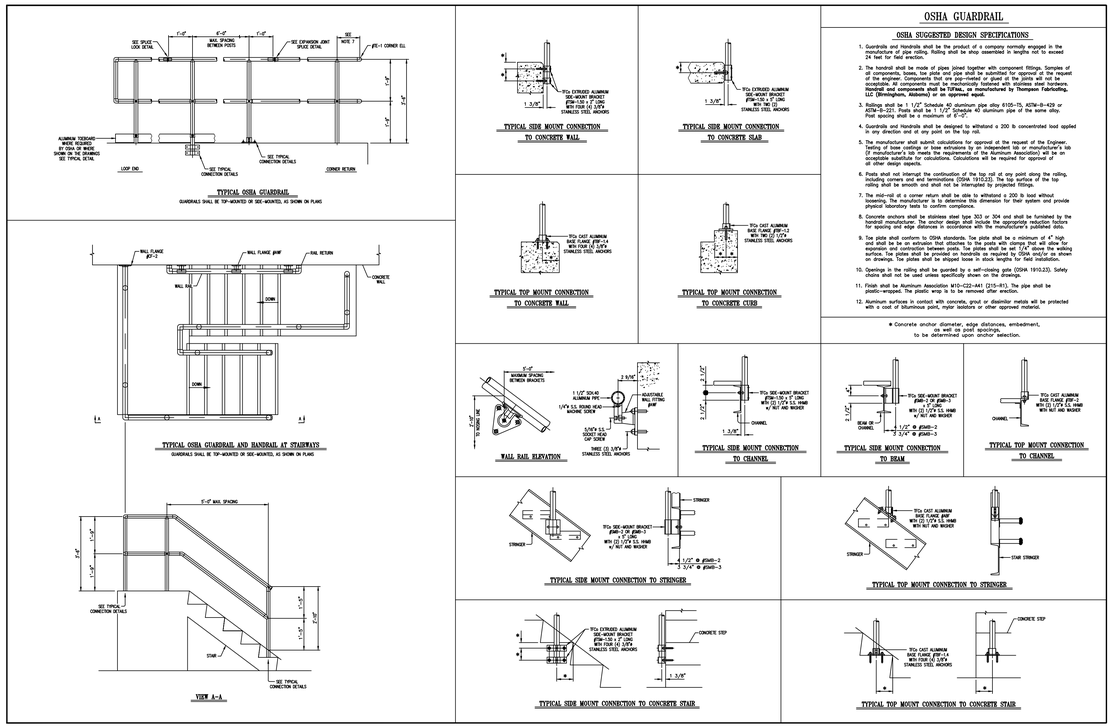

OSHA GUARDRAIL

OSHA SUGGESTED DESIGN SPECIFICATIONS

1. Guardrails and Handrails shall be the product of a company normally engaged in the manufacture of pipe rolling. Rolling shall be stop assembled in lengths not to exceed 24 feet for field erection.
2. The handrail shall be made of pipes joined together with component fittings. Samples of all components, bases, toe plate and pipe shall be submitted for approval at the request of the Engineer. Substitutions of other than those specified shall be made only if they are acceptable. All components must be mechanically fastened with stainless steel hardware. **Handrail and components shall be TUFRail, as manufactured by Thompson Fabricating, LLC (Birmingham, Alabama) or an approved equal.**
3. Railings shall be 1 1/2" Schedule 40 aluminum pipe alloy 6105–T5, ASTM–B–429 or ASTM–B–221. Posts shall be 1 1/2" Schedule 40 aluminum pipe of the same alloy. Post spacing shall be a maximum of 6'–0".
4. Guardrails and Handrails shall be designed to withstand a 200 lb concentrated load applied in any direction and at any point on the top rail.
5. The manufacturer shall submit calculations for approval at the request of the Engineer. Proof of the adequacy of the design of the railing system shall be based on tests or analysis (if manufacturer's lab meets the requirements of the Aluminum Association) will be an acceptable substitute for calculations. Calculations will be required for approval of all other design aspects.
6. Posts shall not interrupt the continuation of the top rail at any point along the railing, including corners and end terminations (OSHA 1910.23). The top surface of the top railing shall be smooth and shall not be interrupted by projected fittings.
7. The mid–rail at a corner return shall be able to withstand a 200 lb load without loosening. The manufacturer is to determine this dimension for their system and provide physical laboratory tests to confirm compliance.
8. Concrete anchors shall be stainless steel type 303 or 304 and shall be furnished by the handrail manufacturer. The anchor design shall include the appropriate reduction factors for spacing and edge distances in accordance with the manufacturer's published data.
9. Toe plate shall conform to OSHA standards. Toe plate shall be a minimum of 4" high and shall be be an extrusion that attaches to the posts with clamps that will allow for expansion and contraction between posts. Toe plates shall be set 1/4" above the walking surface. Toe plates shall be provided on handrails as required by OSHA and/or as shown on drawings. Toe plates shall be shipped loose in stock lengths for field installation.
10. Openings in the railing shall be guarded by a self–closing gate (OSHA 1910.23). Safety chains shall not be used unless specifically shown on the drawings.
11. Finish shall be Aluminum Association M10–C22–A41 (215–R1). The pipe shall be plastic–wrapped. The plastic wrap is to be removed after erection.
12. Aluminum surfaces in contact with concrete, grout or dissimilar metals will be protected with a coat of bituminous paint, mortar isolators or other approved material.

* Concrete anchor diameter, edge distances, embedment, spacing and ø of post sockets, to be determined upon anchor selection.

ALUMINUM HANDRAIL

N.T.S.

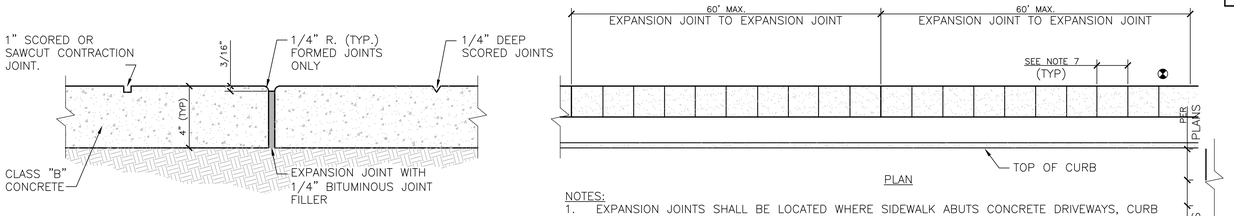

NOTES:
1. EXPANSION JOINTS SHALL BE LOCATED WHERE SIDEWALK ABUTS CONCRETE DRIVEWAYS, CURB OR OTHER ADJACENT STRUCTURES.
2. ONE–HALF INCH BITUMINOUS JOINT FILLER SHALL BE INSTALLED AT EXPANSION JOINT LOCATIONS AND SHALL EXTEND THE FULL DEPTH OF THE CONCRETE.
3. 1" DEEP CONTRACTION JOINTS SHALL BE PLACED AT INTERVALS OF APPROXIMATELY 15' OR AT A SPACING THAT MATCHES THE ADJACENT CURB.
4. FORMED CONTRACTION JOINTS SHALL BE FINISHED WITH A TOOL HAVING A 1/4" RADIUS.
5. SCORED JOINTS SHALL BE 1/4" DEEP AND PLACED AT THE SPACING INDICATED FOR THE WIDTH OF SIDEWALK OR MATCH SCORED JOINTS OF ADJACENT CURB.
6. CONCRETE SHALL BE FINISHED BY MEANS OF A FLOAT, STEEL TROWELLED AND BROOMED WITH A FINE BRUSH IN A TRANSVERSE DIRECTION.
7. 1/4" DEEP SCORED JOINTS (TYP) SPACED AT 6' OR EQUAL TO SIDEWALK WIDTH.

CONCRETE SIDEWALK

N.T.S.

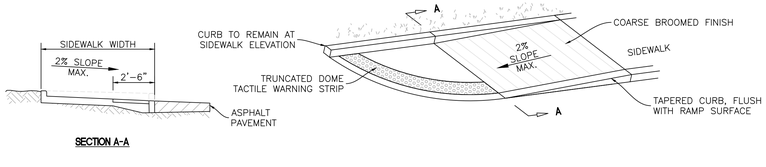

SIDEWALK CURB RAMP

NTS

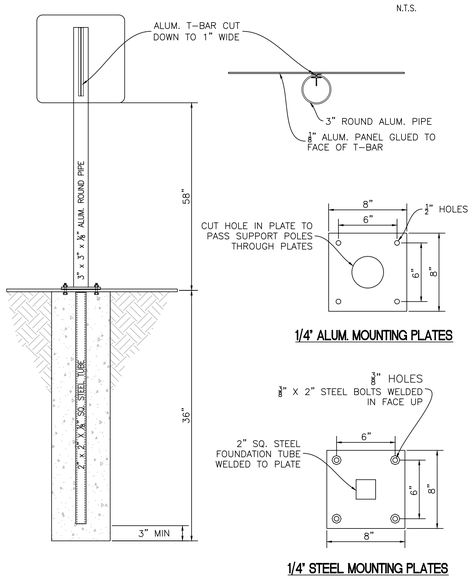

SIGN POST AND FOUNDATION

NTS

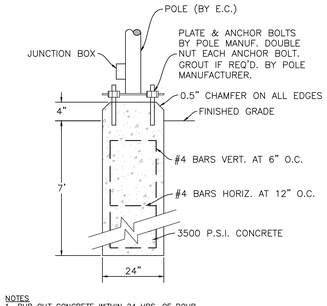

NOTES
1. RUB OUT CONCRETE WITHIN 24 HRS. OF POUR
2. CONDUIT AND GROUDNING ROD PER DETAIL ON SHEET EE502

LIGHT POLE FOUNDATION

NTS

Revisions: Date

VA U.S. Department of Veterans Affairs

VAMC MILWAUKEE
5000 W. National Ave. Milwaukee, WI 53295

LUKE J. LESING 43897–6 INDIANAPOLIS, IN STATE OF WISCONSIN REGISTERED PROFESSIONAL ENGINEER

ARCHITECT/ENGINEERS:

PROJECT LEAD
Architect, Structural Engineer, Civil Engineer
GUIDON DESIGN
905 N. CAPITOL AVE. SUITE 100 INDIANAPOLIS, IN. 46204
317.800.6388 WWW.GUIDONDESIGN.COM
SUSTAINABLE ARCHITECTURE + ENGINEERING

MEP Engineer
APOGEE CONSULTING GROUP
1151 Kildaire Farm Road, Suite 120
Cary, NC 27511
Tele: 919-858-7420

Functional Design
CARL WALKER INC.
11920 S. Highland Ave. Suite 2107
Lombard, IL 60148
Tele: 630-307-3800

BID SET

Drawing Title: SITE DETAILS	Project Title: PARKING STRUCTURE LOT 7	Project Number: 14.1020.02	OFFICE OF FACILITIES MANAGEMENT
		Building Number: #152	
Approved for Design Concept: FACILITY MANAGEMENT DIVISION MANAGER	Location: CLEMENT J ZABLOCKI VAMC	Drawing Number: CS502	VA Project Number: 695-325
	Date: 12/01/2015 · Checked By: KJC · Drawn By: DWC		VA U.S. Department of Veterans Affairs

C:\Users\sdecina\Documents\5D_REVIT_LOCAL\S14.1020-A_MVA-Garage_enam.rvt

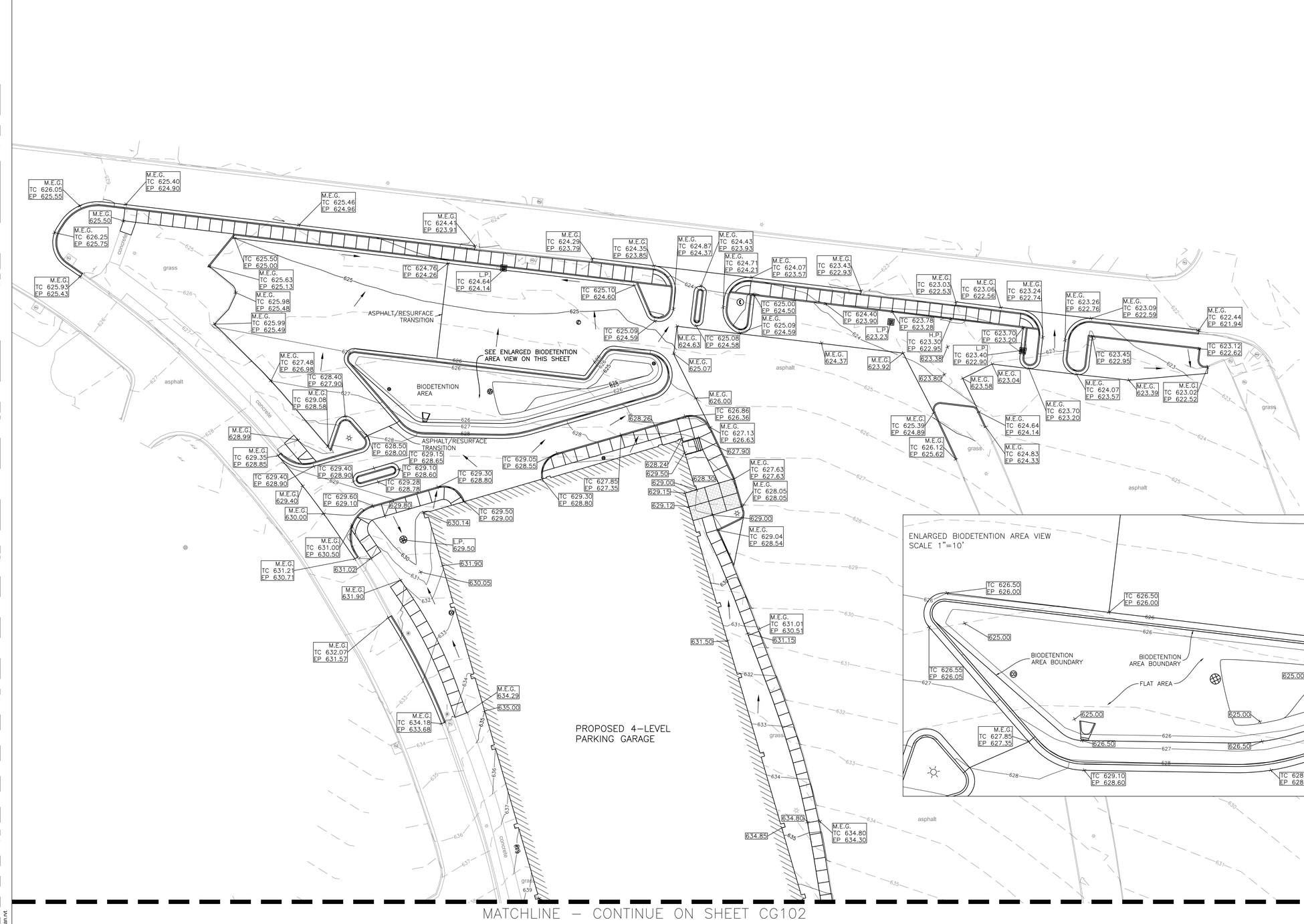

GRADING LEGEND

TC 795.02 EP 794.52	TOP OF CURB GRADE, EDGE OF PAVEMENT GRADE
794.51	SPOT ELEVATION
M.E.G.	MATCH EXISTING GRADE
→	FLOW ARROW

NOTE
1. IN AREAS WHERE SOIL IS TEMPORARILY DISPLACED IN ORDER TO INSTALL PIPING OR OTHER UTILITIES, GRADING SHALL BE RETURNED TO ITS ORIGINAL GRADE AND SLOPE AS IN EXISTING CONDITIONS UNLESS OTHERWISE NOTED ON PLANS.
2. CONTRACTOR RESPONSIBLE TO RE-SEED ALL DISTURBED GRASS AREAS.

Revisions:	Date

VA U.S. Department of Veterans Affairs
VAMC MILWAUKEE
5000 W. National Ave. Milwaukee, WI 53295

ARCHITECT/ENGINEERS:

PROJECT LEAD
Architect, Structural Engineer, Civil Engineer
GUIDON DESIGN
905 N. CAPITOL AVE. SUITE 100 INDIANAPOLIS, IN. 46204
317.800.6388 WWW.GUIDONDESIGN.COM
SUSTAINABLE ARCHITECTURE + ENGINEERING

MEP Engineer
APOGEE CONSULTING GROUP
1151 Kildaire Farm Road, Suite 120
Cary, NC 27511
Tele: 919-858-7420

Functional Design
CARL WALKER INC.
11920 S. Highland Ave. Suite 2107
Lombard, IL 60148
Tele: 630-307-3800

BID SET

Drawing Title	Project Title	Project Number	
GRADING PLAN	PARKING STRUCTURE LOT 7	14.1020.02	OFFICE OF FACILITIES MANAGEMENT
		Building Number #152	
Approved for Design Concept: FACILITY MANAGEMENT DIVISION MANAGER	Location CLEMENT J ZABLOCKI VAMC	Drawing Number CG101	VA Project Number 695-325
	Date 12/01/2015 / Checked By: KJC / Drawn By: DWC		VA U.S. Department of Veterans Affairs

C:\Users\edecina\Documents\GD_REVIT_LOCALS\14.1020-A_MVA-Garage_evan.rvt

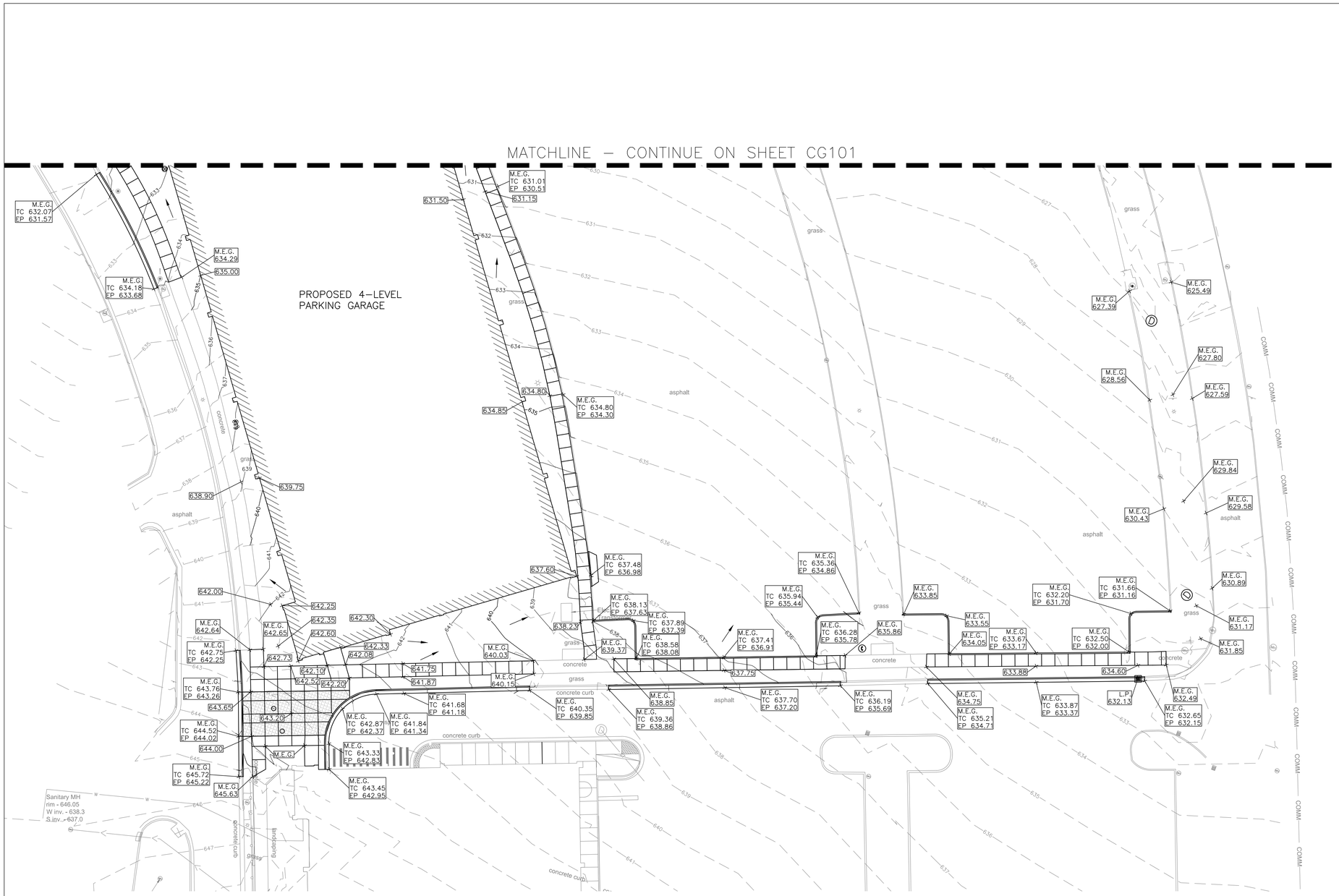

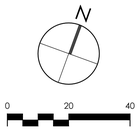

GRADING LEGEND

TC 795.02 EP 794.52	TOP OF CURB GRADE, EDGE OF PAVEMENT GRADE
794.51	SPOT ELEVATION
M.E.G.	MATCH EXISTING GRADE
→	FLOW ARROW

NOTE
1. IN AREAS WHERE SOIL IS TEMPORARILY DISPLACED IN ORDER TO INSTALL PIPING OR OTHER UTILITIES, GRADING SHALL BE RETURNED TO ITS ORIGINAL GRADE AND SLOPE AS IN EXISTING CONDITIONS UNLESS OTHERWISE NOTED ON PLANS.
2. CONTRACTOR RESPONSIBLE TO RE–SEED ALL DISTURBED GRASS AREAS.

Revisions: | Date

VA U.S. Department of Veterans Affairs
VAMC MILWAUKEE
5000 W. National Ave. Milwaukee, WI 53295

ARCHITECT/ENGINEERS:

PROJECT LEAD
Architect, Structural Engineer, Civil Engineer
GUIDON DESIGN
905 N. CAPITOL AVE. SUITE 100 INDIANAPOLIS, IN. 46204
317.800.6388 WWW.GUIDONDESIGN.COM
SUSTAINABLE ARCHITECTURE + ENGINEERING

MEP Engineer
APOGEE CONSULTING GROUP
1151 Kildaire Farm Road, Suite 120
Cary, NC 27511
Tele: 919-858-7420

Functional Design
CARL WALKER INC.
11920 S. Highland Ave. Suite 2107
Lombard, IL 60148
Tele: 630-307-3800

BID SET

Drawing Title: GRADING PLAN	Project Title: PARKING STRUCTURE LOT 7	Project Number: 14.1020.02	OFFICE OF FACILITIES MANAGEMENT
		Building Number: #152	
Approved for Design Concept: FACILITY MANAGEMENT DIVISION MANAGER	Location: CLEMENT J ZABLOCKI VAMC	Drawing Number: CG102	VA Project Number: 695-325
	Date: 12/01/2015	Checked By: KJC	Drawn By: DWC

VA U.S. Department of Veterans Affairs

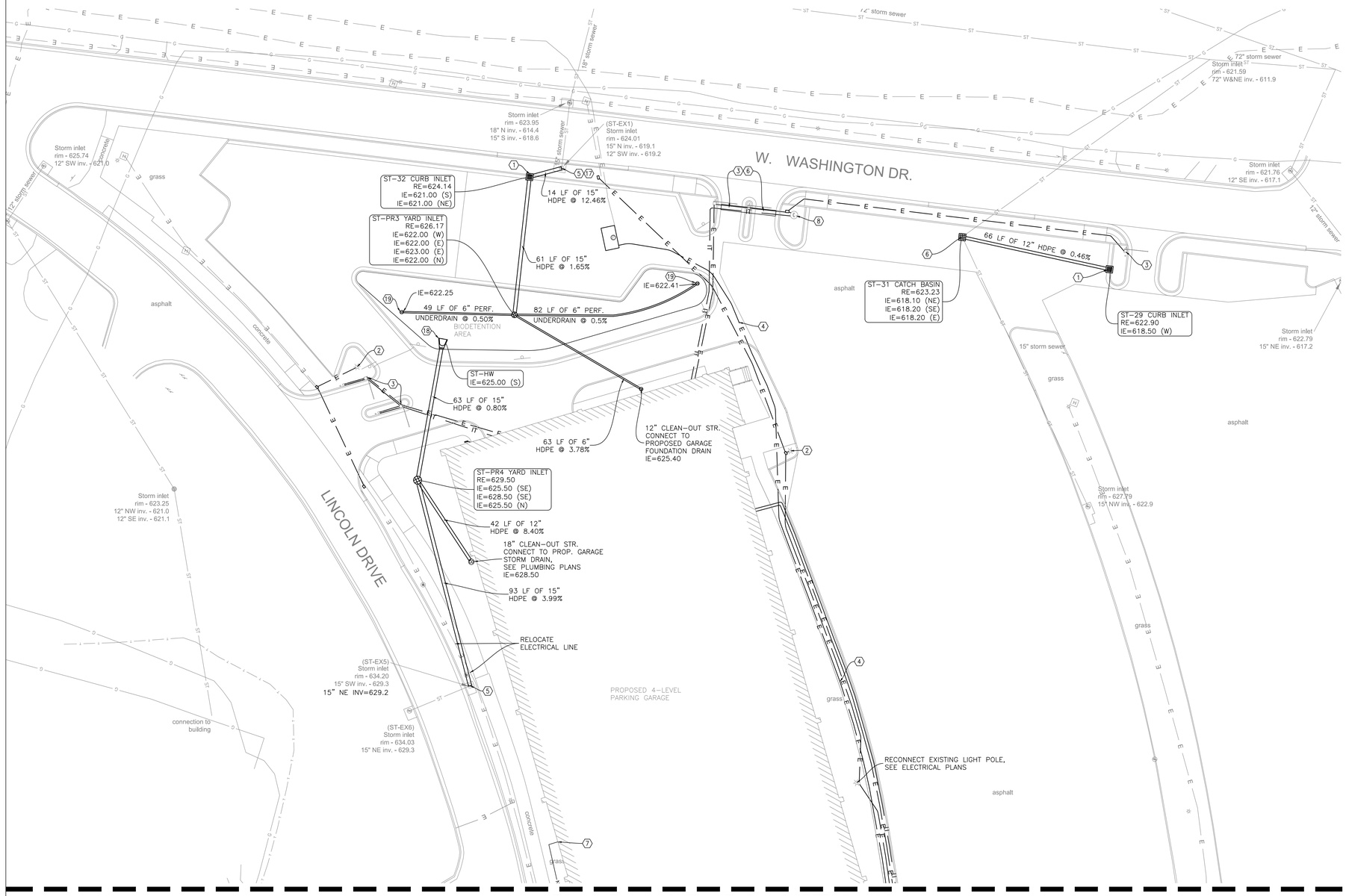

MATCHLINE – CONTINUE ON SHEET CU102

UTILITY KEYNOTES

1. NEW STORM STRUCTURE, GRATE TYPE SHOWN ON PLANS
2. CONNECT RELOCATED LIGHT POLE POWER (SEE ELECTRICAL PLANS)
3. CONNECT GATE POWER (SEE ELECTRICAL PLANS)
4. REROUTE MEDIUM VOLTAGE POWER MAIN LINE (SEE ELECTRICAL PLANS)
5. CORE DRILL AND CONNECT STORM PIPE TO EXISTING INLET
6. REPLACE EXISTING STORM STRUCTURE
7. CONNECT TO 4HP GRINDER PUMP (SEE PLUMBING PLANS FOR DETAILS)
8. RELOCATED EMERGENCY BLUE LIGHT PHONE
9. 6"X6" MJ TAPPING SLEEVE AND VALVE BOX (NOT USED)
10. 6" WATER MAIN, HDPE, DR 13.5 (NOT USED)
11. 6"X6" MJ TEE (NOT USED)
12. FIRE HYDRANT ASSEMBLY (NOT USED)
13. 6"X2" MJ REDUCER (NOT USED)
14. 2" HDPE WATER SERVICE, DR 13.5, CURB STOP, AND SERVICE BOX (NOT USED)
15. 4" SANITARY FORCEMAIN, HDPE, DR 13.5 (NOT USED)
16. BORING FOR CONCRETE-ENCASED DUCT BANK (SEE ELECTRICAL PLANS) (NOT USED)
17. ADJUST RIM TO GRADE
18. END SECTION, SEE DETAIL ON SHEET CU501
19. CLEAN-OUT PORT 6" PVC STANDPIPE WITH WATERTIGHT CAP FLUSH AT FINISH GRADE
20. BORING LIMITS (NOT USED)
21. BORING TRENCH (NOT USED)

NOTES
1. IN AREAS WHERE SOIL IS TEMPORARILY DISPLACED IN ORDER TO INSTALL PIPING OR OTHER UTILITIES, GRADING SHALL BE RETURNED TO ITS ORIGINAL GRADE AND SLOPE AS IN EXISTING CONDITIONS UNLESS OTHERWISE NOTED ON PLANS.
2. CONTRACTOR RESPONSIBLE TO RE-SEED ALL DISTURBED GRASS AREAS.

Revisions: Date

VA U.S. Department of Veterans Affairs
VAMC MILWAUKEE
5000 W. National Ave. Milwaukee, WI 53295

LUKE J. LESING 43897-6 INDIANAPOLIS, IN

ARCHITECT/ENGINEERS:

PROJECT LEAD
Architect, Structural Engineer, Civil Engineer
GUIDON DESIGN
905 N. CAPITOL AVE. SUITE 100 INDIANAPOLIS, IN. 46204
317.800.6388 WWW.GUIDONDESIGN.COM
SUSTAINABLE ARCHITECTURE + ENGINEERING

MEP Engineer
APOGEE CONSULTING GROUP
1151 Kildaire Farm Road, Suite 120
Cary, NC 27511
Tele: 919-858-7420

Functional Design
CARL WALKER INC.
11920 S. Highland Ave. Suite 2107
Lombard, IL 60148
Tele: 630-307-3800

BID SET

Drawing Title: UTILITY PLAN	Project Title: PARKING STRUCTURE LOT 7	Project Number: 14.1020.02	OFFICE OF FACILITIES MANAGEMENT
		Building Number: #152	
Approved for Design Concept: FACILITY MANAGEMENT DIVISION MANAGER	Location: CLEMENT J ZABLOCKI VAMC	Drawing Number: CU101	VA Project Number: 695-325
	Date: 12/01/2015 — Checked By: KJC — Drawn By: DWC		VA U.S. Department of Veterans Affairs

C:\Users\sdecina\Documents\GD_REVIT_LOCALS\14.1020-A_MVA-Garage_exam.rvt

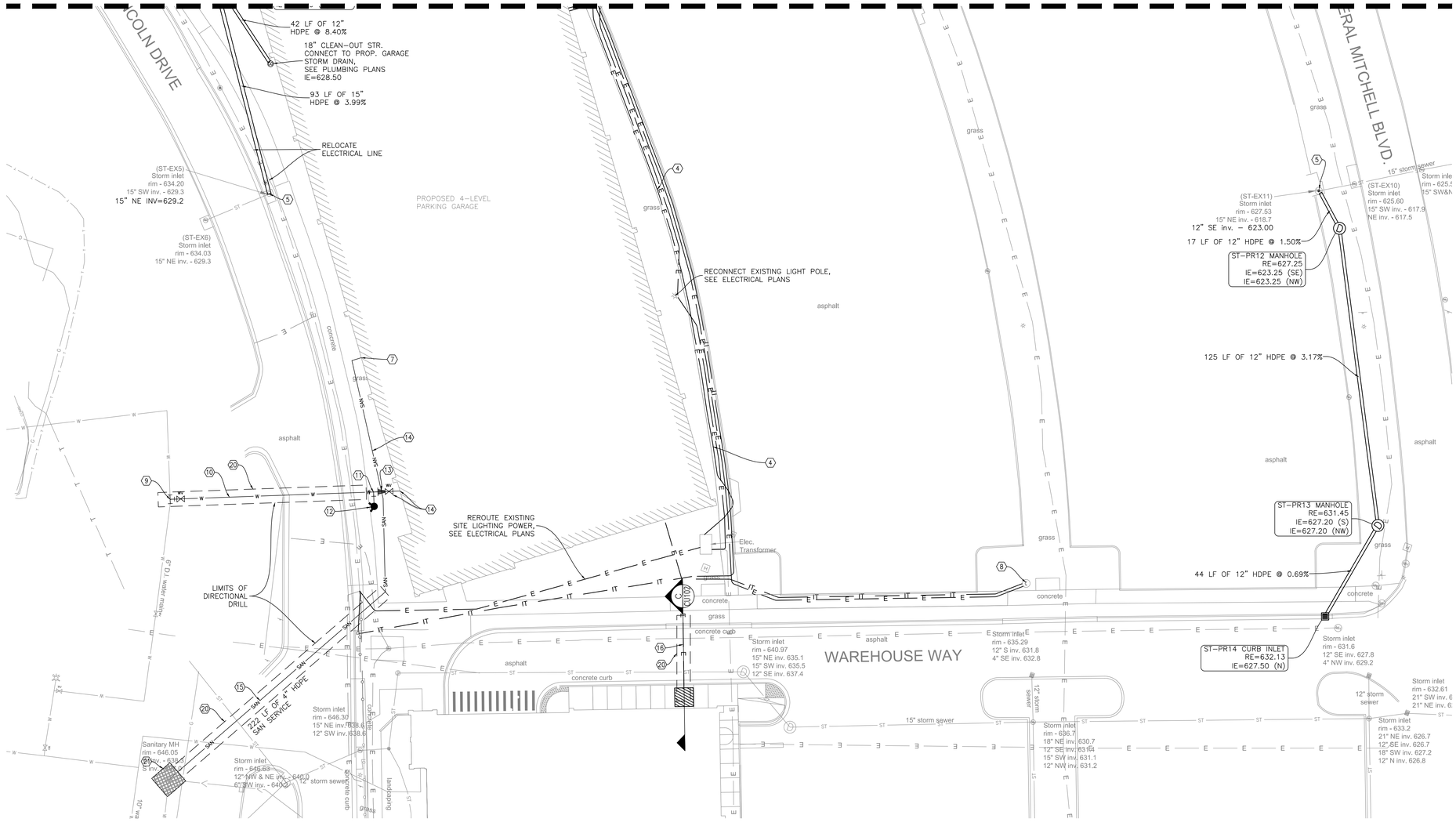

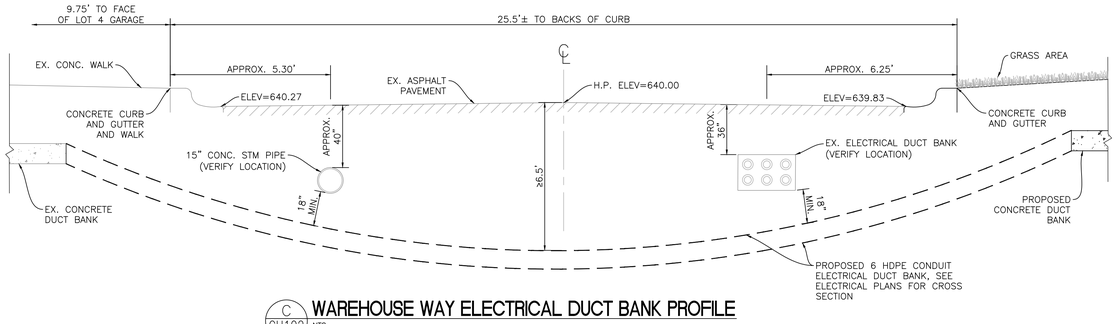

C / CU102 **WAREHOUSE WAY ELECTRICAL DUCT BANK PROFILE**
NTS

1. THE UTILITIES INDICATED ON THESE PLANS MAY NOT BE A COMPLETE INVENTORY OF ALL UTILITIES CURRENTLY ON OR NEAR THE SITE. THE CONTRACTOR SHALL BE RESPONSIBLE FOR OBTAINING PUBLIC AND/OR PRIVATE UTILITY LOCATING SERVICES PRIOR TO STARTING CONSTRUCTION.
2. THE SIZE AND LOCATIONS OF THE UTILITIES INDICATED ON THESE PLANS ARE APPROXIMATE. THE CONTRACTOR IS TO DETERMINE AND FIELD VERIFY ALL HORIZONTAL AND VERTICAL LOCATIONS PRIOR TO STARTING CONSTRUCTION ACTIVITIES.

N

0 20 40

UTILITY KEYNOTES

1. NEW STORM STRUCTURE, GRATE TYPE SHOWN ON PLANS (NOT USED)
2. CONNECT RELOCATED LIGHT POLE POWER (SEE ELECTRICAL PLANS) (NOT USED)
3. CONNECT GATE POWER (SEE ELECTRICAL PLANS) (NOT USED)
4. REROUTE MEDIUM VOLTAGE POWER MAIN LINE (SEE ELECTRICAL PLANS)
5. CORE DRILL AND CONNECT STORM PIPE TO EXISTING INLET
6. REPLACE EXISTING STORM STRUCTURE (NOT USED)
7. CONNECT TO 4HP GRINDER PUMP (SEE PLUMBING PLANS FOR DETAILS)
8. RELOCATED EMERGENCY BLUE LIGHT PHONE
9. 6"X6" MJ TAPPING SLEEVE AND VALVE BOX
10. 6" WATER MAIN, HDPE, DR 13.5
11. 6"X6" MJ TEE
12. FIRE HYDRANT ASSEMBLY
13. 6"X2" MJ REDUCER
14. 2" HDPE WATER SERVICE, DR 13.5, CURB STOP, AND SERVICE BOX
15. 4" SANITARY FORCEMAIN, HDPE, DR 13.5
16. BORING FOR CONCRETE-ENCASED DUCT BANK (SEE ELECTRICAL PLANS)
17. ADJUST RIM TO GRADE
18. END SECTION, SEE DETAIL ON SHEET CU501 (NOT USED)
19. CLEAN-OUT PORT 6" PVC STANDPIPE WITH WATERTIGHT CAP FLUSH AT FINISH GRADE (NOT USED)
20. BORING LIMITS
21. BORING TRENCH

NOTES
1. IN AREAS WHERE SOIL IS TEMPORARILY DISPLACED IN ORDER TO INSTALL PIPING OR OTHER UTILITIES, GRADING SHALL BE RETURNED TO ITS ORIGINAL GRADE AND SLOPE AS IN EXISTING CONDITIONS UNLESS OTHERWISE NOTED ON PLANS.
2. CONTRACTOR RESPONSIBLE TO RE-SEED ALL DISTURBED GRASS AREAS.

Revisions:	Date

VA U.S. Department of Veterans Affairs
VAMC MILWAUKEE
5000 W. National Ave. Milwaukee, WI 53295

ARCHITECT/ENGINEERS:

PROJECT LEAD
Architect, Structural Engineer, Civil Engineer
GUIDON DESIGN
905 N. CAPITOL AVE. SUITE 100 INDIANAPOLIS, IN. 46204
317.800.6388 WWW.GUIDONDESIGN.COM
SUSTAINABLE ARCHITECTURE + ENGINEERING

MEP Engineer
APOGEE CONSULTING GROUP
1151 Kildaire Farm Road, Suite 120
Cary, NC 27511
Tele: 919-858-7420

Functional Design
CARL WALKER INC.
11920 S. Highland Ave. Suite 2107
Lombard, IL 60148
Tele: 630-307-3800

BID SET

Drawing Title	Project Title	Project Number	OFFICE OF FACILITIES MANAGEMENT
UTILITY PLAN	PARKING STRUCTURE LOT 7	14.1020.02	
		Building Number #152	
Approved for Design Concept: FACILITY MANAGEMENT DIVISION MANAGER	Location CLEMENT J ZABLOCKI VAMC	Drawing Number CU102	VA Project Number 695-325
	Date 12/01/2015 · Checked By: KJC · Drawn By: DWC		VA U.S. Department of Veterans Affairs

C:\Users\sdecrat\Documents\GD_REVIT_LOCAL\514.1020-A_MVA-Garage_evan.rvt

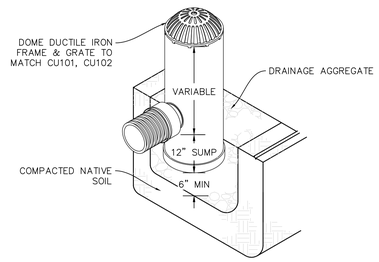

YARD INLET

NTS

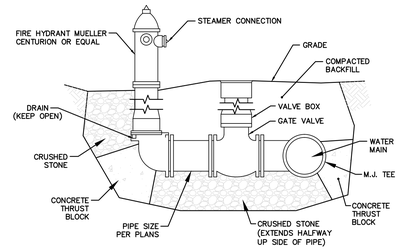

FIRE HYDRANT ASSEMBLY

NTS

VALVE TO BE PLACED ON MAIN SIDE OF STREET

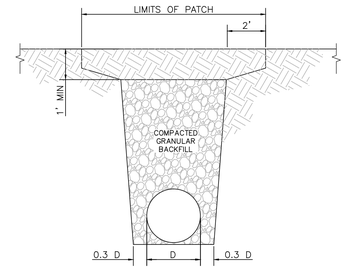

TRENCH CUT IN GRASS AREA

NTS

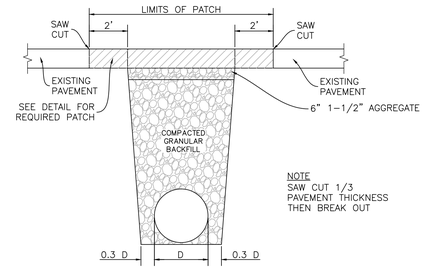

TRENCH CUT AT PAVEMENT

NTS

DIMENSIONS									
DIA	T (MIN)	A	C	D	E	K	R1	R2	APPROX WEIGHT
12"	2"	5"	4'-3"	6'-3"	2'-0"	1.3'	10⅝"	9"	800
15"	2⅛"	7"	4'-0"	6'-3"	2'-6"	1.5'	12⅝"	11"	1100
18"	2½"	11"	4'-1"	6'-3"	3'-0"	1.8'	15⅜"	12"	1300
21"	2⅝"	11"	3'-6"	6'-3"	3'-6"	2.1'	18⅜"	13"	1500
24"	3"	12"	2'-8"	6'-3"	4'-0"	2.3'	19¾"	14"	1800
27"	3⅜"	13"	2'-0"	6'-3"	4'-6"	2.6'	18¾"	14½"	2100
30"	3½"	14"	22"	6'-3"	5'-0"	2.9'	18⅝"	15"	2400
33"	3¾"	15"	3'-6"	6'-3"	5'-6"	3.1'	23⅝"	17½"	4100
36"	4"	17"	3'-1"	6'-3"	6'-0"	3.4'	24¾"	20"	4200

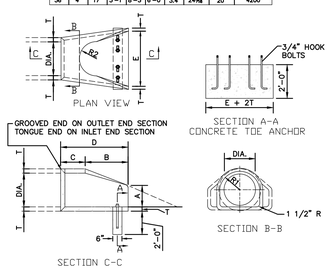

CONCRETE END SECTION

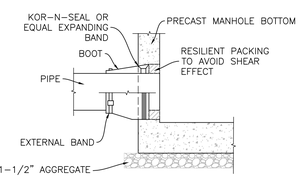

PIPE CONNECTION TO EXISTING MANHOLE

NTS

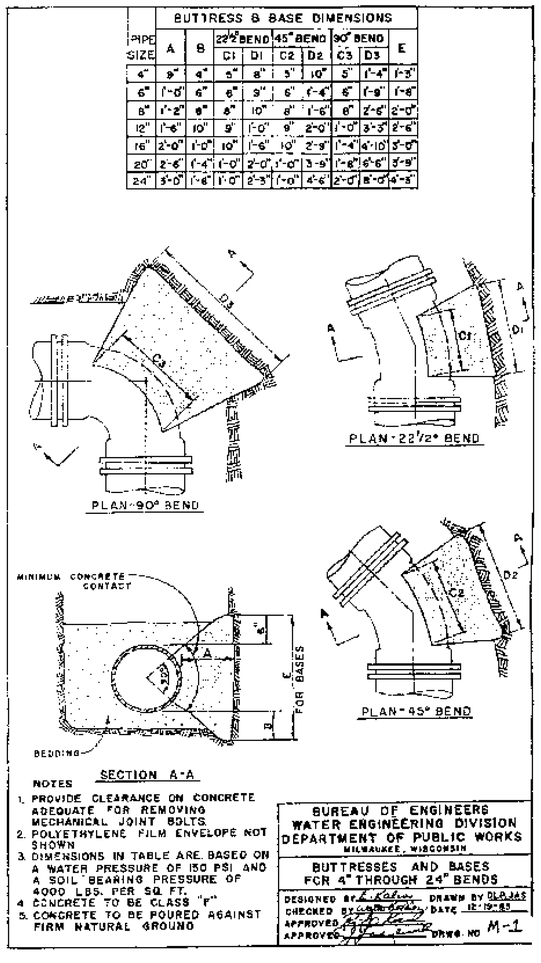

FLAT CASTING: NEENAH R-1924 OR APPROVED EQUAL (SEE PLANS)

DOME GRATE: NEENAH 2510-A OR APPROVED EQUAL (SEE PLANS)

CURB INLET GRATE: NEENAH R3010 OR APPROVED EQUAL (SEE PLANS)

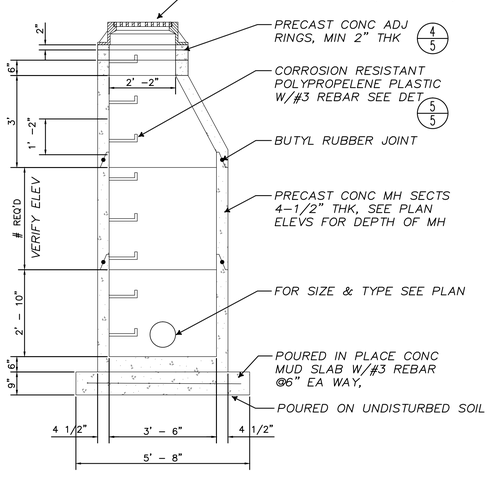

TYPE 'C' MANHOLE

NTS

NOTE: ALL INLETS & ENDWALLS SHALL BE REINFORCED CONCRETE, PRECAST OR CAST IN PLACE. PROVIDE SUBMITTAL SHOP DRAWINGS FOR EACH TYPE PRIOR TO STARTING CONSTRUCTION.

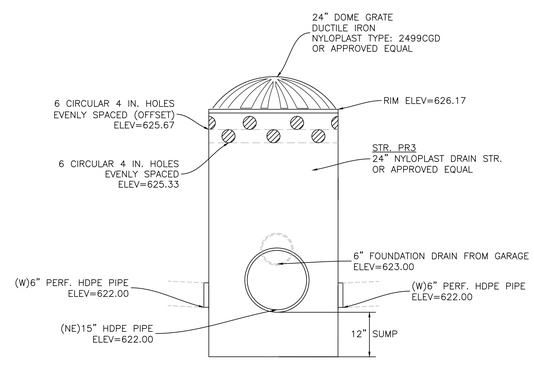

24' BIODETENTION YARD DRAIN

NTS

SEE RELATED ITEMS IN BIODETENTION SECTION ON CJ101

Revisions:	Date

VA | U.S. Department of Veterans Affairs

VAMC MILWAUKEE
5000 W. National Ave. Milwaukee, WI 53295

ARCHITECT/ENGINEERS:

PROJECT LEAD
Architect, Structural Engineer, Civil Engineer
GUIDON DESIGN
905 N. CAPITOL AVE. SUITE 100 INDIANAPOLIS, IN. 46204
317.800.6388 WWW.GUIDONDESIGN.COM
SUSTAINABLE ARCHITECTURE + ENGINEERING

MEP Engineer
APOGEE CONSULTING GROUP
1151 Kildaire Farm Road, Suite 120
Cary, NC 27511
Tele: 919-858-7420

Functional Design
CARL WALKER INC.
11920 S. Highland Ave. Suite 2107
Lombard, IL 60148
Tele: 630-307-3800

BID SET

Drawing Title	Project Title	Project Number	OFFICE OF FACILITIES MANAGEMENT
UTILITY DETAILS	PARKING STRUCTURE LOT 7	14.1020.02	
		Building Number #152	
Approved for Design Concept: FACILITY MANAGEMENT DIVISION MANAGER	Location CLEMENT J ZABLOCKI VAMC	Drawing Number CU501	VA Project Number 695-325
	Date 12/01/2015 · Checked By: KJC · Drawn By: DWC		VA U.S. Department of Veterans Affairs

C:\Users\electrical\Documents\GD_REVIT_LOCALS\14.1020-A_MVA-Garage_revan.rvt

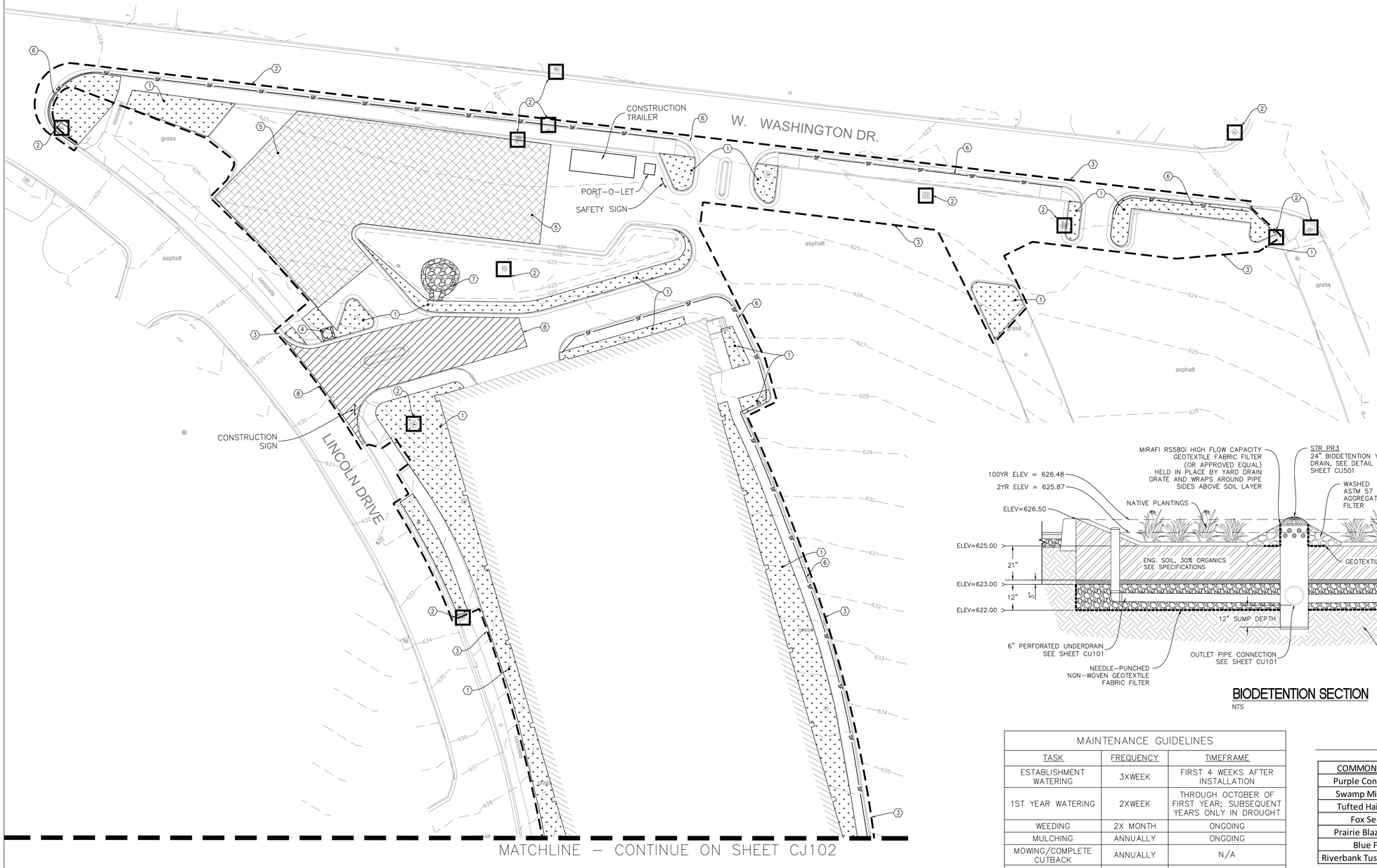

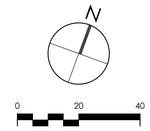

EROSION CONTROL KEYNOTES

1. PERMANENT SEEDING AREA
2. INLET PROTECTION
3. LIMITS OF DISTURBANCE
4. CONCRETE WASHOUT
5. LAY DOWN AREA
6. TEMPORARY SILT BARRIER
7. RIP–RAP
8. CONSTRUCTION ENTRANCE

NOTE
CONTRACTOR SHALL ENSURE ALL DISTURBED GRASS AREAS RECEIVE PERMANENT GRASS SEEDING

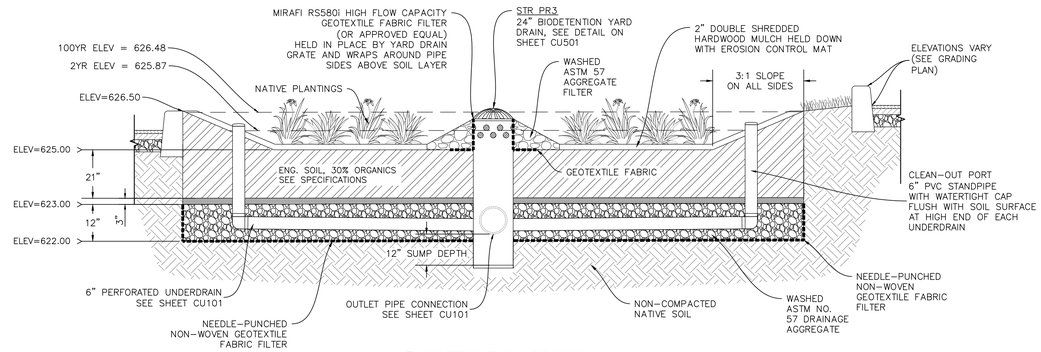

BIODETENTION SECTION

NTS

MAINTENANCE GUIDELINES

TASK	FREQUENCY	TIMEFRAME
ESTABLISHMENT WATERING	3XWEEK	FIRST 4 WEEKS AFTER INSTALLATION
1ST YEAR WATERING	2XWEEK	THROUGH OCTOBER OF FIRST YEAR; SUBSEQUENT YEARS ONLY IN DROUGHT
WEEDING	2X MONTH	ONGOING
MULCHING	ANNUALLY	ONGOING
MOWING/COMPLETE CUTBACK	ANNUALLY	N/A
TRASH REMOVAL	1XMONTH	ONGOING
TRIM VEGETATION	AS NEEDED	ONGOING
REPLACE DEAD PLANTS	AS NEEDED	ONGOING

BIODETENTION AREA PLANTING SCHEDULE

COMMON NAME	SCIENTIFIC NAME	HEIGHT	PERCENTAGE
Purple Coneflower	Echinacea purpurea	2-3 FT	5
Swamp Milkweed	Asclepias incarnata	3-4 FT	5
Tufted Hair Grass	Deschampsia cespitosa	1-2 FT	25
Fox Sedge	Carex vupinoidea	2-3 FT	25
Prairie Blazing Star	Liatris pyncostachya	3-5 FT	5
Blue Flag	Iris virginica shrevei	1-2 FT	10
Riverbank Tussock Sedge	Carex emoryi	2 FT	25

Revisions:	Date

VAMC MILWAUKEE
5000 W. National Ave. Milwaukee, WI 53295

U.S. Department of Veterans Affairs

LUKE J LEISING 43897-6 INDIANAPOLIS, IN

ARCHITECT/ENGINEERS:

PROJECT LEAD
Architect, Structural Engineer, Civil Engineer
GUIDON DESIGN
905 N. CAPITOL AVE. SUITE 100 INDIANAPOLIS, IN. 46204
317.800.6388 WWW.GUIDONDESIGN.COM
SUSTAINABLE ARCHITECTURE + ENGINEERING

MEP Engineer
APOGEE CONSULTING GROUP
1151 Kildaire Farm Road, Suite 120
Cary, NC 27511
Tele: 919-858-7420

Functional Design
CARL WALKER INC.
11920 S. Highland Ave. Suite 2107
Lombard, IL 60148
Tele: 630-307-3800

BID SET

Drawing Title	Project Title	Project Number	OFFICE OF FACILITIES MANAGEMENT
EROSION CONTROL & PLANTING PLAN	PARKING STRUCTURE LOT 7	14.1020.02	
		Building Number #152	
Approved for Design Concept: FACILITY MANAGEMENT DIVISION MANAGER	Location CLEMENT J ZABLOCKI VAMC	Drawing Number CJ101	VA Project Number 695-325
	Date 12/01/2015 · Checked By: KJC · Drawn By: DWC		

C:\Users\leidecm\Documents\GD_REVIT_LOCALS\14.1020-A_MVA-Garage_evan.rvt

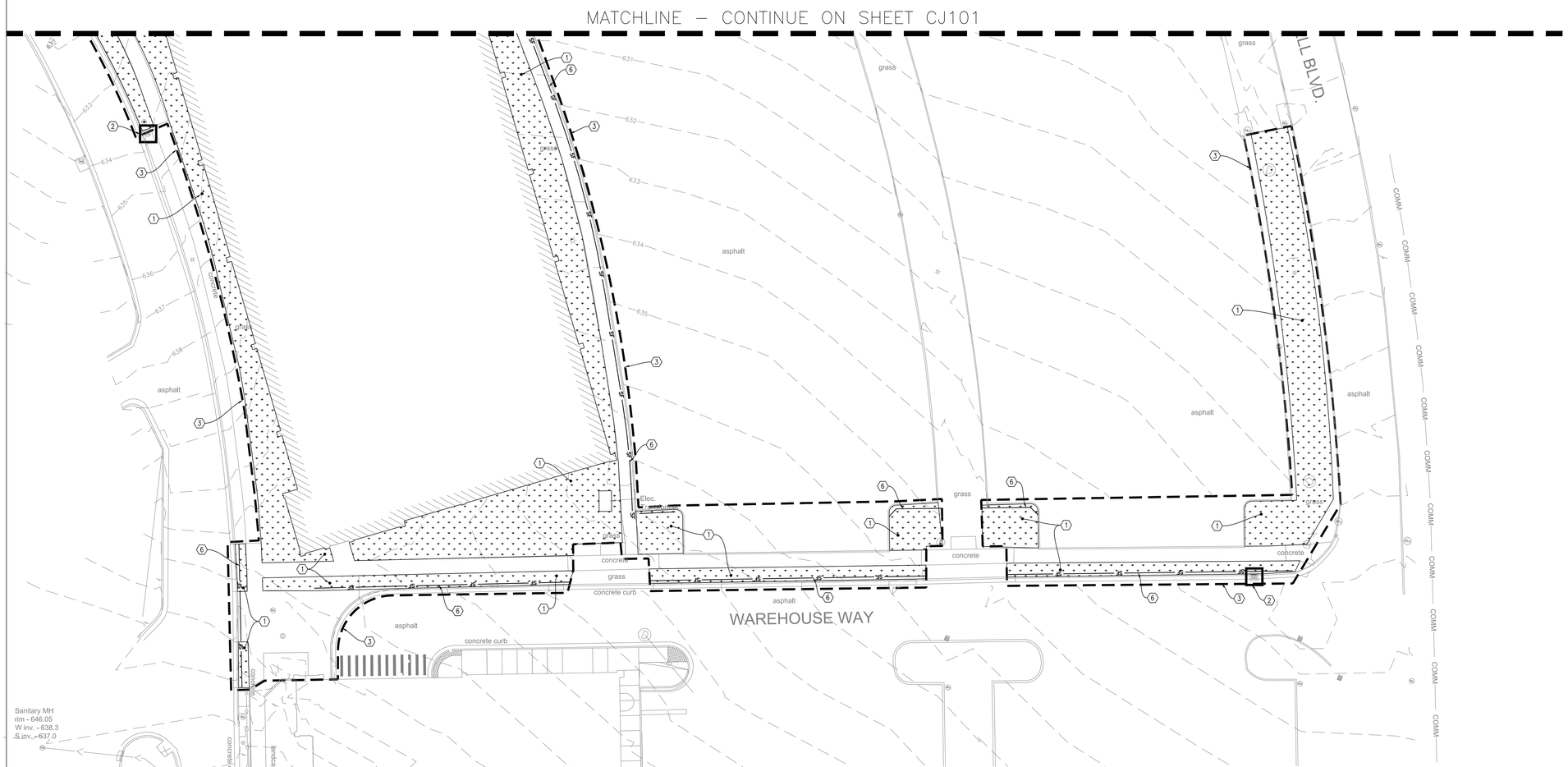

N

0 20 40

EROSION CONTROL KEYNOTES

1. PERMANENT SEEDING AREA
2. INLET PROTECTION
3. LIMITS OF DISTURBANCE
4. CONCRETE WASHOUT (NOT USED)
5. LAY DOWN AREA (NOT USED)
6. TEMPORARY SILT BARRIER
7. RIP–RAP (NOT USED)
8. CONSTRUCTION ENTRANCE (NOT USED)

NOTE
CONTRACTOR SHALL ENSURE ALL DISTURBED GRASS AREAS RECEIVE PERMANENT GRASS SEEDING

Revisions:	Date

VA U.S. Department of Veterans Affairs

VAMC MILWAUKEE
5000 W. National Ave. Milwaukee, WI 53295

ARCHITECT/ENGINEERS:

PROJECT LEAD
Architect, Structural Engineer, Civil Engineer
GUIDON DESIGN
905 N. CAPITOL AVE. SUITE 100 INDIANAPOLIS, IN. 46204
317.800.6388 WWW.GUIDONDESIGN.COM
SUSTAINABLE ARCHITECTURE + ENGINEERING

MEP Engineer
APOGEE CONSULTING GROUP
1151 Kildaire Farm Road, Suite 120
Cary, NC 27511
Tele: 919-858-7420

Functional Design
CARL WALKER INC.
11920 S. Highland Ave. Suite 2107
Lombard, IL 60148
Tele: 630-307-3800

BID SET

Drawing Title: EROSION CONTROL & PLANTING PLAN	Project Title: PARKING STRUCTURE LOT 7	Project Number: 14.1020.02	OFFICE OF FACILITIES MANAGEMENT
		Building Number: #152	
Approved for Design Concept: FACILITY MANAGEMENT DIVISION MANAGER	Location: CLEMENT J ZABLOCKI VAMC	Drawing Number: CJ102	VA Project Number: 695-325
	Date: 12/01/2015 · Checked By: KJC · Drawn By: DWC		VA U.S. Department of Veterans Affairs

C:\Users\electrical\Documents\GD_REVIT_LOCAL\514.1020-A_MVA-Garage_evan.rvt

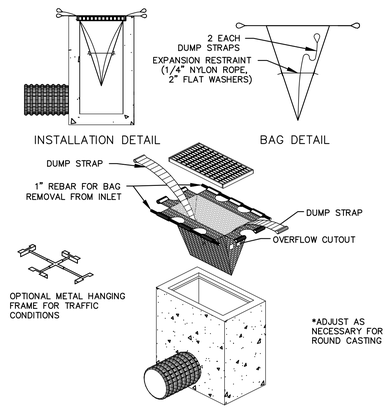

INLET PROTECTION SACK

NTS

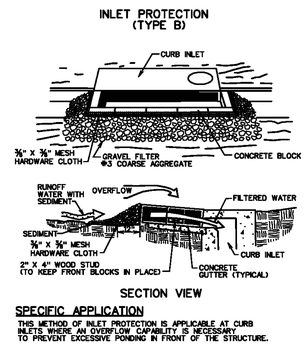

SPECIFIC APPLICATION

THIS METHOD OF INLET PROTECTION IS APPLICABLE AT CURB INLETS WHERE AN OVERFLOW CAPABILITY IS NECESSARY TO PREVENT EXCESSIVE PONDING IN FRONT OF THE STRUCTURE.

CURB INLET EROSION PROTECTION

NTS

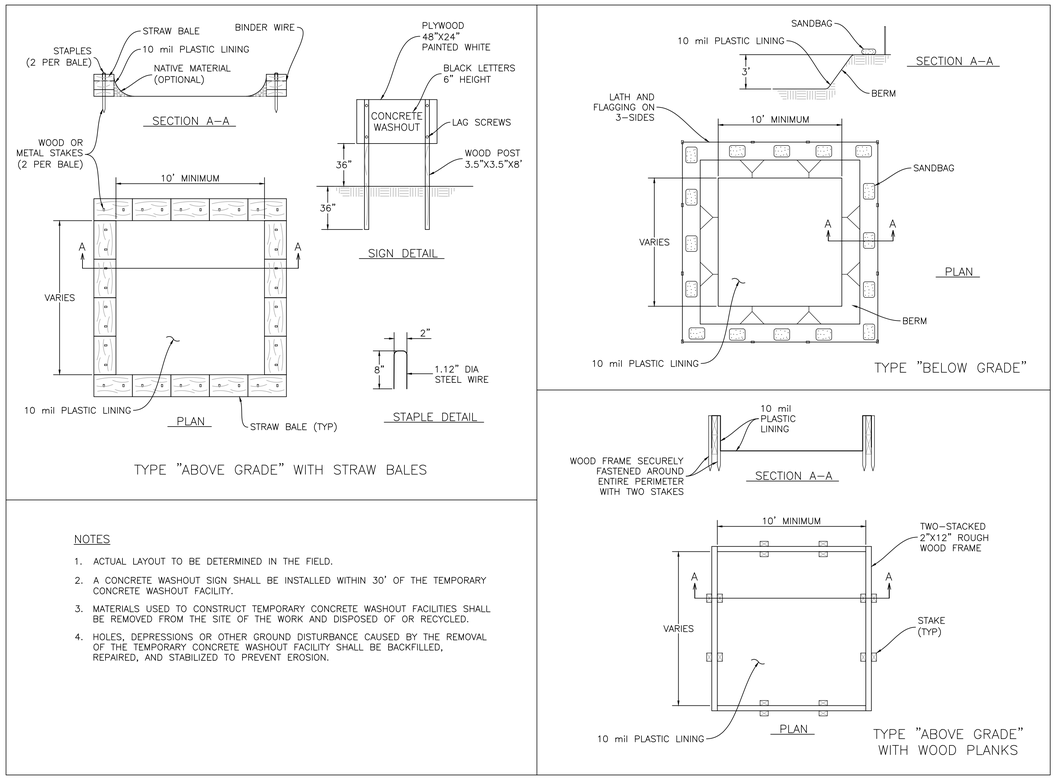

NOTES

1. ACTUAL LAYOUT TO BE DETERMINED IN THE FIELD.
2. A CONCRETE WASHOUT SIGN SHALL BE INSTALLED WITHIN 30' OF THE TEMPORARY CONCRETE WASHOUT FACILITY.
3. MATERIALS USED TO CONSTRUCT TEMPORARY CONCRETE WASHOUT FACILITIES SHALL BE REMOVED FROM THE SITE OF THE WORK AND DISPOSED OF OR RECYCLED.
4. HOLES, DEPRESSIONS OR OTHER GROUND DISTURBANCE CAUSED BY THE REMOVAL OF THE TEMPORARY CONCRETE WASHOUT FACILITY SHALL BE BACKFILLED, REPAIRED, AND STABILIZED TO PREVENT EROSION.

CONCRETE WASHOUT

N.T.S.

GENERAL NOTES

DETAILS OF CONSTRUCTION, MATERIALS AND WORKMANSHIP NOT SHOWN ON THIS DRAWING SHALL CONFORM TO THE PERTINENT REQUIREMENTS OF THE STANDARD SPECIFICATIONS AND THE APPLICABLE SPECIAL PROVISIONS.

TRACKING PAD SHALL BE INSPECTED DAILY. DEFICIENT AREAS SHALL BE REPAIRED OR REPLACED IMMEDIATELY.

TRACKING PAD TO BE REMOVED AFTER CONSTRUCTION IS COMPLETED.

TRACKING PAD SHALL BE THE FULL WIDTH OF THE EGRESS POINT.

SURFACE WATER MUST BE PREVENTED FROM PASSING THROUGH THE TRACKING PAD. FLOWS SHALL BE DIVERTED AWAY, AROUND OR CONVEYED UNDER THE TRACKING PAD.

CULVERT PIPE OR OTHER BMP USED TO DIVERT WATER AWAY, AROUND OR UNDER THE TRACKING PAD SHALL BE DESIGNED TO CONVEY THE 2 YEAR - 24 HOUR EVENT.

THE COST OF ADDITIONAL BMP TO DIVERT WATER ARE INCIDENTAL TO THE TRACKING PAD BID ITEM.

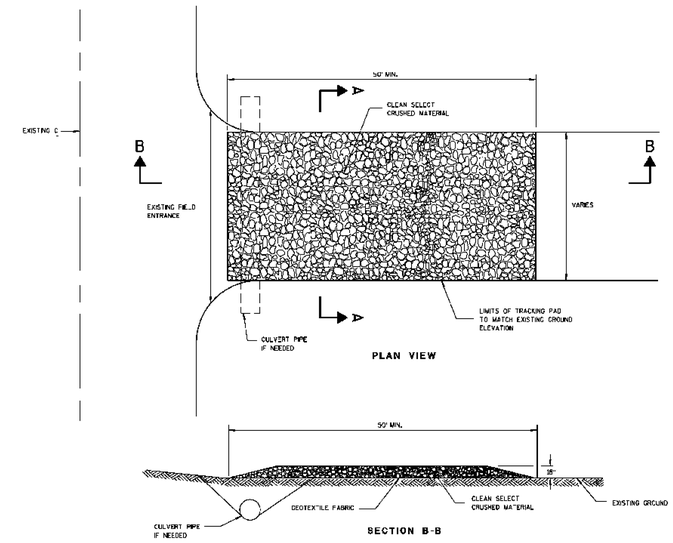

TRACKING PAD

TRACKING PAD	
STATE OF WISCONSIN DEPARTMENT OF TRANSPORTATION	
APPROVED 3/24/2014 DATE	/S/ Jerry H. Zogg ROADWAY STANDARDS DEVELOPMENT ENGINEER
Pages	

GENERAL NOTES

1. TRENCH SHALL BE A MINIMUM OF 4" WIDE & 5" DEEP TO DURY AND ANCHOR THE GEOTEXTILE FABRIC. FOLD MATERIAL TO FIT TRENCH AND BACKFILL & COMPACT TRENCH WITH EXCAVATED SOIL.
2. WOOD POSTS SHALL BE A MINIMUM SIZE OF 1½" x 1½" OF OAK OR HICKORY.
3. CONSTRUCT SILT FENCE FROM A CONTINUOUS ROLL IF POSSIBLE BY CUTTING LENGTHS TO AVOID JOINTS. IF A JOINT IS NECESSARY USE ONE OF THE FOLLOWING TWO METHODS; A) TWIST METHOD -- OVERLAP THE END POSTS AND TWIST, OR ROTATE, AT LEAST 180 DEGREES, B) HOOK METHOD -- HOOK THE END OF EACH SILT FENCE LENGTH.

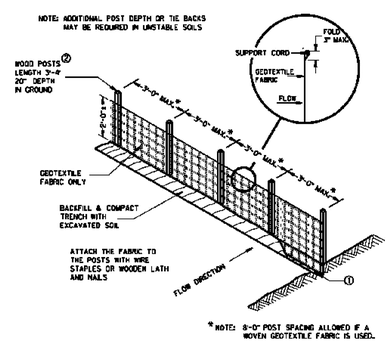

SILT FENCE

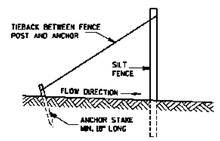

SILT FENCE TIE BACK
(WHEN ADDITIONAL SUPPORT REQUIRED)

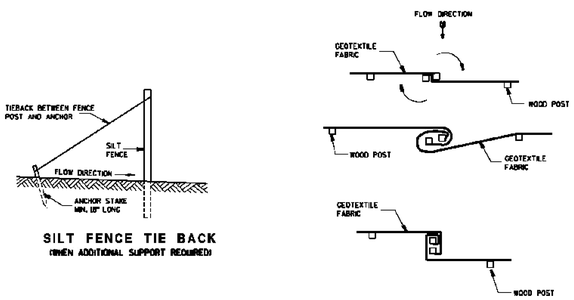

TWIST METHOD

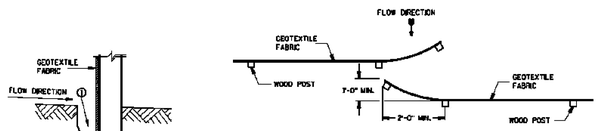

HOOK METHOD

JOINING TWO LENGTHS OF SILT FENCE 4

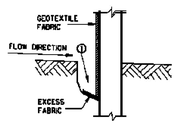

TRENCH DETAIL

This drawing based on Wisconsin Department of Transportation Standard Detail Drawing 8 E 9-6.

SILT FENCE

Revisions:	Date

VA | U.S. Department of Veterans Affairs

VAMC MILWAUKEE
5000 W. National Ave. Milwaukee, WI 53295

ARCHITECT/ENGINEERS:

PROJECT LEAD
Architect, Structural Engineer, Civil Engineer
GUIDON DESIGN
905 N. CAPITOL AVE. SUITE 100 INDIANAPOLIS, IN. 46204
317.800.6388 WWW.GUIDONDESIGN.COM
SUSTAINABLE ARCHITECTURE + ENGINEERING

MEP Engineer
APOGEE CONSULTING GROUP
1151 Kildaire Farm Road, Suite 120
Cary, NC 27511
Tele: 919-858-7420

Functional Design
CARL WALKER INC.
11920 S. Highland Ave. Suite 2107
Lombard, IL 60148
Tele: 630-307-3800

BID SET

Drawing Title	Project Title	Project Number	OFFICE OF FACILITIES MANAGEMENT
EROSION CONTROL DETAILS	PARKING STRUCTURE LOT 7	14.1020.02	
		Building Number #152	
Approved for Design Concept: FACILITY MANAGEMENT DIVISION MANAGER	Location CLEMENT J ZABLOCKI VAMC	Drawing Number CJ501	VA Project Number 695-325
	Date 12/01/2015 · Checked By: KJC · Drawn By: DWC		VA U.S. Department of Veterans Affairs

C:\Users\sdescal\Documents\GD_REVIT_LOCALS\14.1020-A_MVA-Garage_evan.rvt

MISCELLANEOUS SYMBOLS

NORTH ARROW	
SECTION NUMBER	1
SHEET NUMBER	S101
CALLOUT NUMBER	1
SHEET NUMBER	S101
EARTH	
GRAVEL	
LIMIT OF EXTENT	
CONTINUOUS EXTENT	
ELEVATION REFERENCE	Name / Elevation
DIRECTION OF SPAN	20 GA. 3" ROOF DECK
GRIDLINES	A, 1
FLOOR DRAIN	FD
TRENCH FOOTING NOTATION	TF ##
COLUMN FOOTING NOTATION	F ##
WALL FOOTING NOTATION	WF ##
GRADE BEAM NOTATION	GB ##
PIER NOTATION	P ##
CONCRETE BEAM NOTATION	B ##
PILE CAP NOTATION	PC ##
BEARING WALL NOTATION	BW ##
SHEAR WALL NOTATION	SW ##

MASONRY MEMBERS

CMU BLOCK	
CMU BOND BEAM (FULLY GROUTED)	
CMU LINTEL (FULLY GROUTED)	
SINGLE REINFORCEMENT (FULLY GROUT REINFORCED CELLS)	EQ, EQ
DOUBLE REINFORCEMENT (FULLY GROUT REINFORCED CELLS	EQ, EQ, EQ

STRUCTURAL DRAWINGS ABBREVIATIONS

A/E	ARCHITECT/ENGINEER	J/BRG	JOIST BEARING
ACI	AMERICAN CONCRETE INSTITUTE	JST	JOIST
ACP	AUGER CAST PILE	JT	JOINT
ADDL	ADDITIONAL	KB	KNEE BRACE
ADJ	ADJACENT	KIP, K	1,000 POUNDS
AGGR	AGGREGATE	KO	KNOCK-OUT
AISC	AMERICAN INSTITUTE OF STEEL CONSTRUCTION	KSI	KIPS PER SQUARE INCH
ALT	ALTERNATE	L	ANGLE OR LENGTH
ANSI	AMERICAN NATIONAL STANDARDS INSTITUTE	LAB	LABORATORY
APPROX	APPROXIMATE	LB	POUND
AR	ANCHOR ROD	LF	LINEAL FOOT
ARCH	ARCHITECTURAL	LIN	LINEAL, LINEAR
ASTM	AMERICAN SOCIETY FOR TESTING AND MATERIALS	LLH	LONG LEG HORIZONTAL
AWS	AMERICAN WELDING SOCIETY	LLV	LONG LEG VERTICAL
B/	BOTTOM OF	LONGIT	LONGITUDINAL
BAL	BALANCE	LP	LOW POINT
BD	BOARD	LSLT	LONG SLOTTED HOLE
BLDG	BUILDING	LTWT	LIGHT WEIGHT
BLK	BLOCK	MAS	MASONRY
BLKG	BLOCKING	MATL	MATERIAL
BM	BEAM	MAX	MAXIMUM
BOTT	BOTTOM	MB	MACHINE BOLT
BRG	BEARING	MC	MISCELLANEOUS CHANNEL
BRKT	BRACKET	MECH	MECHANICAL
BTWN	BETWEEN	MEMB	MEMBRANE
C	STANDARD CHANNEL	MEP	MECHANICAL/ ELECTRICAL/ PLUMBING
CANT	CANTILEVER	MFR	MANUFACTURER
CC	CENTER TO CENTER	MIN	MINIMUM
CF	COLD FORMED	MISC	MISCELLANEOUS
CG	CENTER OF GRAVITY	MO	MASONRY OPENING
CIP	CAST-IN-PLACE	MULT	MULTIPLE
CJ	CONTROL JOINT OR CONSTRUCTION JOINT	N/A	NOT APPLICABLE
CJP	COMPLETE JOINT PENETRATION	NO	NUMBER
CL	CENTERLINE	NOM	NOMINAL
CLR	CLEARANCE, CLEAR	NS	NEAR SIDE
CMU	CONCRETE MASONRY UNIT	NTS	NOT TO SCALE
COL	COLUMN	OC	ON CENTER
CONC	CONCRETE	OD	OUTSIDE DIAMETER
CONN	CONNECTION	OF	OUTSIDE FACE
CONST	CONSTRUCTION	OFD	OVERFLOW DRAIN
CONT	CONTINUOUS	OH	OVERHEAD
CONTR	CONTRACTOR	OPNG	OPENING
CTR	CENTER	OPP	OPPOSITE
CTRD	CENTERED	OPPHD	OPPOSITE HAND
CU FT	CUBIC FEET	ORIG	ORIGINAL
CU IN	CUBIC INCH	OVS	OVERSIZED HOLE
CYD	CUBIC YARD	P	PIER
CW	CONCRETE WALL	PC	PIER CAP OR PRECAST
DBL	DOUBLE	PERIM	PERIMETER
DEG	DEGREE	PERM	PERMANENT
DEMO	DEMOLITION, DEMOLISH	PERP	PERPENDICULAR
DEPT	DEPARTMENT	PJP	PARTIAL JOINT PENETRATION
DET	DETAIL	PL	PLATE
DIA	DIAMETER	PLF	POUNDS PER LINEAL FOOT
DIAG	DIAGONAL	PLYWD	PLYWOOD
DIAPH	DIAPHRAGM	PREFAB	PREFABRICATED
DIM	DIMENSION	PREL	PRELIMINARY
DN	DOWN	PREP	PREPARATION, PREPARE
DO	DITTO	PROJ	PROJECTION
DP	DRILLED PIER OR DEEP	PS	PRESTRESSED
DWG	DRAWING	PSF	POUNDS PER SQUARE FOOT
DWL	DOWELS	PSI	POUNDS PER SQUARE INCH
EA	EACH	PSL	PARALLEL STRAND LUMBER
EF	EACH FACE	PT	POST-TENSIONED
EJ	EXPANSION JOINT	R	RADIUS
EL, ELEV	ELEVATION	RD	ROOF DRAIN
ELEC	ELECTRICAL	REF	REFERENCE
ENCL	ENCLOSURE	REINF	REINFORCEMENT, REINFORCE
ENGR	ENGINEER	REQD	REQUIRED
EOD	EDGE OF DECK	RO	ROUGH OPENING
EOJ	EDGE OF JOIST	SCH	SCHEDULE
EOS	EDGE OF SLAB	SECT	SECTION
EQ	EQUAL	SF	SQUARE FEET
EQPT	EQUIPMENT	SHT	SHEET
ES	EACH SIDE	SIM	SIMILAR
EW	EACH WAY	SL	SLOPE
EX	EXISTING	SL-DN	SLOPE DOWN
EXP	EXPANSION	SL-UP	SLOPE UP
EXT	EXTERIOR	SOG	SLAB-ON-GRADE
FAB	FROM ADJACENT BEAM	SP	SHEET PILING
FD	FLOOR DRAIN	SPA	SPACES, SPACE
FDN	FOUNDATION	SPECS	SPECIFICATIONS
FIN	FINISH	SQ	SQUARE
FLG	FLANGE	SS	STAINLESS STEEL
FLR	FLOOR	SSLT	SHORT SLOTTED HOLE
FS	FOOTING STEP	STD	STANDARD
FT	FEET	STIFF	STIFFENER
FTG	FOOTING	STL	STEEL
FTGD	FOOTING DRAIN	STRUC	STRUCTURAL
FV	FIELD VERIFY	SYM	SYMMETRICAL
GA	GAUGE	T & B	TOP AND BOTTOM
GALV	GALVANIZED	T/	TOP OF
GB	GRADE BEAM	T/GB	TOP OF GRADE BEAM
GRND	GROUND	TBS	MECHANICAL TENSION BUTT SPLICE
GT	GIRDER TRUSS	TEMP	TEMPERATURE
HAS, HS	HEADED ANCHOR STUD	TF	TRENCH FOOTING
HK	HOOK	THRU	THROUGH
HORIZ	HORIZONTAL	TRANS	TRANSVERSE
HP	HIGH POINT	TYP	TYPICAL
HS	HOLLOW STRUCTURAL SECTION	UL	UNDERWRITERS' LABORATORY INC.
HT	HIP TRUSS	UNO	UNLESS NOTED OTHERWISE
HVAC	HEATING, VENTILATION, AIR CONDITIONING	UT	ULTRA-SONIC TEST
ID	INSIDE DIAMETER	VERT	VERTICAL
IF	INSIDE FACE	W	WIDE FLANGE
IN	INCH	W/	WITH
INCL	INCLUDE	W/O	WITHOUT
INFO	INFORMATION	WD	WOOD
INSUL	INSULATION	WF	WALL FOOTING
INT	INTERIOR	WP	WORK POINT
		WWF	WELDED WIRE FABRIC

BEAM LEGEND

BEAM REACTION, TYP — BEAM SIZE — CAMBER

20K (8) W18X40 (4) C=1" (8) 20K

QUANTITY OF SHEAR STUDS, UNIFORMLY SPACED BETWEEN ADJACENT FRAMING, TYP (COMPOSITE CONSTRUCTION ONLY)

NOTES:
1) REACTION VALUE IS ASD (KIPS), UNO.
2) WHERE NO VALUE IS SHOWN, DESIGN CONNECTION FOR A MINIMUM REACTION OF 10 KIPS.
3) SPACE STUDS PER TYPICAL SHEAR STUD PLACEMENT DETAIL. MINIMUM NUMBER OF STUDS PER GENERAL NOTES.
4) "M" IN PLACE OF BEAM SHAPE INDICATES W10X12 WITH MINIMUM CONNECTION.
5) HSS IN PLACE OF SHAPE INDICATES HSS10X4X5/16, UNO.
6) BEAMS ARE PRIMARY MEMBERS FOR FIREPROOFING UNLESS NOTED AS SECONDARY.
7) POSITIVE CAMBER UPWARDS, NEGATIVE CAMBER DOWNWARDS. CAMBER SHOWN ON CANTILEVERS IS AT END OF CANTILEVER.

STRUCTURAL SHEET LIST

SHEET NUMBER	SHEET NAME
SI001	ABBREVIATIONS AND SYMBOLS
SI002	LOAD MAPS
SI003	STRUCTURAL GENERAL NOTES
SB101	FOUNDATION PLAN
SB401	ENLARGED PARTIAL FOUNDATION PLANS
SB402	ENLARGED SHEARWALL PILE CAP PLANS
SB501	TYPICAL FOUNDATION DETAILS
SB502	FOUNDATION SECTIONS AND DETAILS
SB503	FOUNDATION SECTIONS AND DETAILS
SB601	PILE/PILE CAP SCHEDULE, SECTIONS AND DETAILS
SB611	GRADE BEAM, WALL FOOTING, CONCRETE WALL AND MASONRY WALL SCHEDULES AND DETAILS
SF101	SLAB-ON-GRADE
SF102	LEVEL 1 - FRAMING PLAN
SF103	LEVEL 2 - FRAMING PLAN
SF104	LEVEL 3 - FRAMING PLAN
SF201	CAST IN PLACE WALL ELEVATIONS
SF202	SHEARWALL ELEVATIONS AND SCHEDULES
SF301	BUILDING SECTIONS
SF401	STAIR #1 ENLARGED FRAMING AND ROOF PLANS
SF402	STAIR #2 ENLARGED FRAMING AND ROOF PLANS
SF411	PRECAST WALL ELEVATIONS
SF501	TYPICAL PRECAST SECTIONS AND DETAILS
SF502	FRAMING SECTIONS AND DETAILS
SF503	FRAMING SECTIONS AND DETAILS
SF901	ISOMETRICS

BID ALTERNATES

ALT	DESCRIPTION
1	DO NOT PROVIDE DESIGNATED FALL DETERRENT/SECURITY SCREENING AND CARD READERS AT ENTRANCES TO STAIRWELLS. REFER TO DRAWINGS ON GI103 FOR EXTENT OF FALL DETERRENT/SECURITY SCREENING TO BE REMOVED. DO NOT PROVIDE CARD READERS AT ENTRANCE TO STAIR TOWERS FOR DOORS L105 AND 104.
2	DO NOT PROVIDE THE BRICK VENEER AT THE NORTHEAST STAIR TOWER AND THE SOUTHWEST STAIR TOWER. DO NOT PROVIDE THE ALUMINUM STOREFRONT WINDOW ENCLOSURE OF THE NORTHEAST STAIR TOWER. PROVIDE METAL GUARDRAILS AT WINDOW OPENINGS IN LIEU OF ALUMINUM STOREFRONT.
3	DO NOT PROVIDE FALL DETERRENT IN ITS ENTIRETY ON ALL LEVELS.
4	DO NOT PROVIDE AREA #1 - LEVEL 3. REFER TO DRAWINGS ON GI103 FOR EXTENT OF AREA DEDUCT.
5	DO NOT PROVIDE THE ALUMINUM STOREFRONT ENCLOSURE OF THE TOP FLOOR (LEVEL 3) LOBBY ENCLOSURE. DO NOT PROVIDE THE ALUMINUM STOREFRONT WINDOW ENCLOSURE OF THE SOUTHWEST STAIR TOWER. PROVIDE METAL GUARDRAILS AT WINDOW OPENINGS IN LIEU OF ALUMINUM STOREFRONT.
6	DO NOT PROVIDE AREA #2 - LEVEL 3. REFER TO DRAWINGS ON GI103 FOR EXTENT OF AREA DEDUCT.
7	DO NOT PROVIDE AREA #3 - LEVEL 3. REFER TO DRAWINGS ON GI104 FOR EXTENT OF AREA DEDUCT.
8	DO NOT PROVIDE AREA #4 - LEVEL 2. REFER TO DRAWINGS ON GI104 FOR EXTENT OF AREA DEDUCT. DO NOT PROVIDE SECOND ELEVATOR #2 AND ASSOCIATED EQUIPMENT.
9	DO NOT PROVIDE PTZ AND FIXED CAMERAS THROUGHOUT GARAGE. ALL INFRASTRUCTURE IS TO REMAIN IN BASE BID FOR FUTURE CONNECTIVITY.

Revisions: Date

VA U.S. Department of Veterans Affairs

VAMC MILWAUKEE
5000 W. National Ave. Milwaukee, WI 53295

MARK A. VANDERVUSE REGISTERED NO. 10809552 STATE OF INDIANA PROFESSIONAL ENGINEER

ARCHITECT/ENGINEERS:

PROJECT LEAD
Architect, Structural Engineer, Civil Engineer
GUIDON DESIGN
905 N. CAPITOL AVE. SUITE 100 INDIANAPOLIS, IN. 46204
317.800.6388 WWW.GUIDONDESIGN.COM
SUSTAINABLE ARCHITECTURE + ENGINEERING

MEP Engineer
APOGEE CONSULTING GROUP
7330 Chapel Hill Road, Suite 202
Raleigh, NC 27607
Tele: 757-663-8513

Functional Design
CARL WALKER INC.
11920 S. Highland Ave. Suite 2107
Lombard, IL 60148
Tele: 630-307-3800

BID SET

Drawing Title: ABBREVIATIONS AND SYMBOLS	Project Title: PARKING STRUCTURE LOT 7	Project Number: 14.1020.02	OFFICE OF FACILITIES MANAGEMENT
		Building Number: #152	
Approved for Design Concept: FACILITY MANAGEMENT DIVISION MANAGER	Location: CLEMENT J ZABLOCKI VAMC	Drawing Number: SI001	VA Project Number: 695-324
	Date: 1 DEC 2015 / Checked By: MAV / Drawn By: WJT		VA U.S. Department of Veterans Affairs

C:\Users\bthomas\Documents\14.1020.02-S-MVA-Garage_WJThomas.rvt

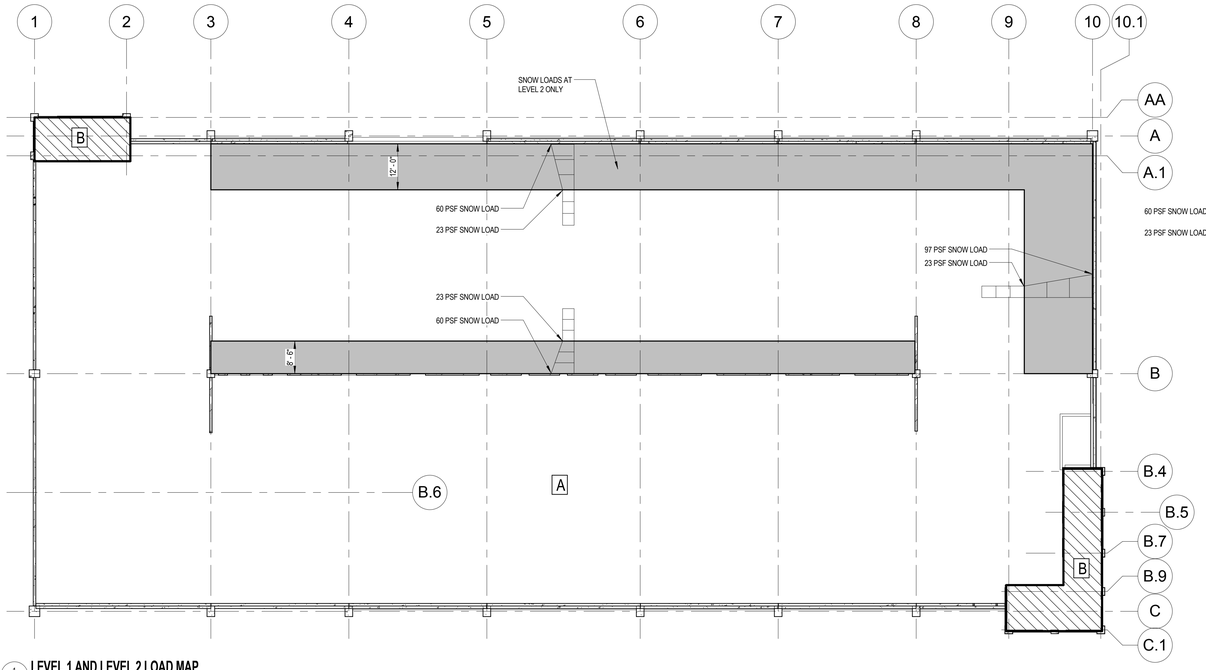

1 SI002 **LEVEL 1 AND LEVEL 2 LOAD MAP**
SCALE: 1/16" = 1'-0"

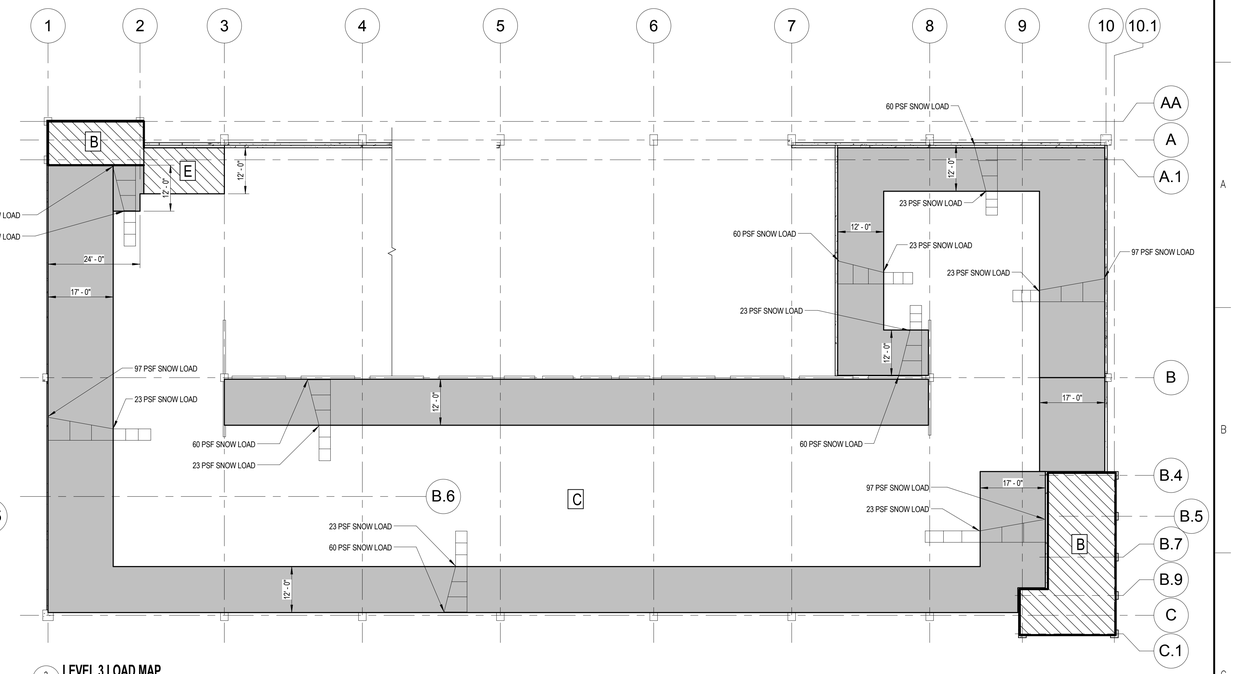

2 SI002 **LEVEL 3 LOAD MAP**
SCALE: 1/16" = 1'-0"

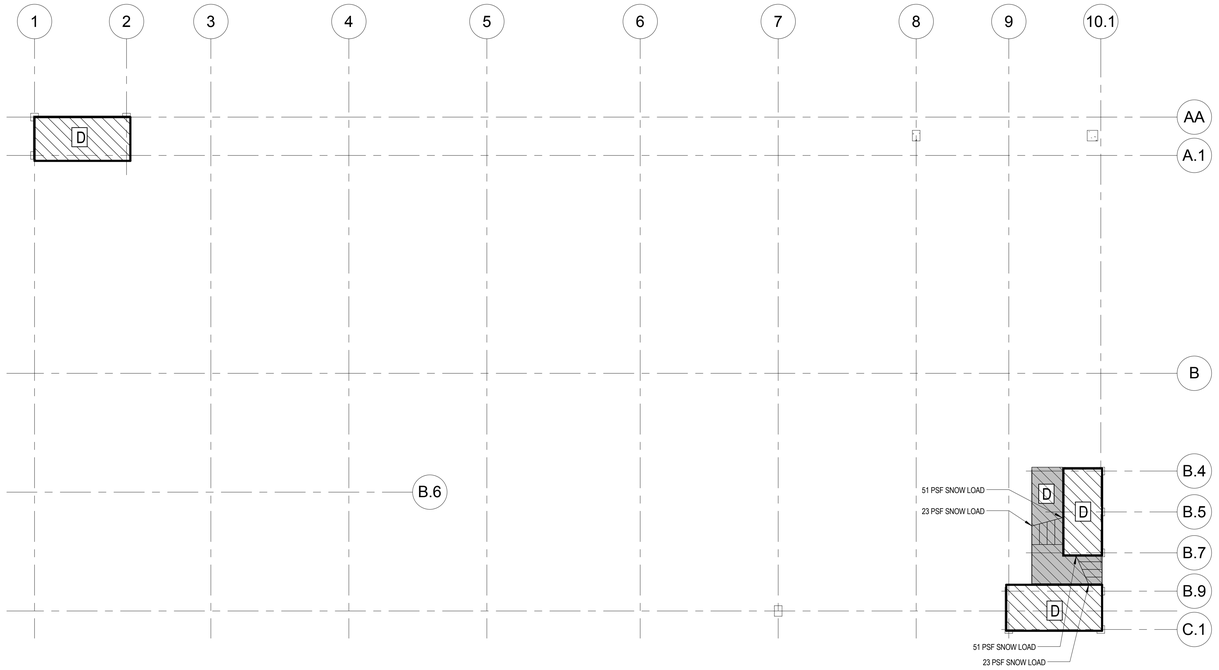

3 SI002 **ROOF LOAD MAP**
SCALE: 1/16" = 1'-0"

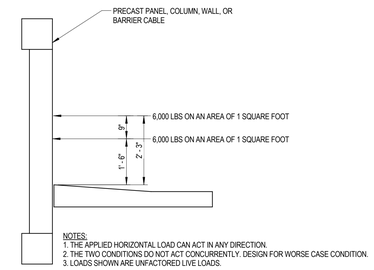

4 SI002 **TYPICAL PRECAST PANEL VEHICLE BARRIER LOADING DIAGRAM**
SCALE: 1/2" = 1'-0"

DESIGN DATA

THE BUILDING STRUCTURE HAS BEEN DESIGNED IN ACCORDANCE WITH THE 2015 INTERNATIONAL BUILDING CODE.

SEE LOAD MAPS FOR FLOOR LOADING CRITERIA.

SNOW LOAD DESIGN DATA

1. GROUND SNOW LOAD (PG) = 30 PSF
2. LOW-SLOPE ROOF SNOW LOAD (PF) = 23 PSF
3. SNOW EXPOSURE FACTOR (CE) = 0.9
4. THERMAL FACTOR (CT) = 1.2
5. SNOW LOAD IMPORTANCE FACTOR (IS) = 1.0

WIND LOAD DESIGN DATA

1. BASIC WIND SPEED (3-SECOND GUST) = 115 MPH
2. WIND LOAD IMPORTANCE FACTOR (IW) = 1.0
3. WIND EXPOSURE = C
4. WIND DESIGN PRESSURE (P) = VARIES WITH HEIGHT AND LOCATION

EARTHQUAKE DESIGN DATA

1. SHORT PERIOD SPECTRAL RESPONSE (SS) = 0.087
2. 1-SECOND SPECTRAL RESPONSE (S1) = 0.047
3. SEISMIC IMPORTANCE FACTOR (IE) = 1.0
4. OCCUPANCY CATEGORY = II
5. SEISMIC DESIGN CATEGORY = B
6. SITE CLASSIFICATION = D
7. SHORT PERIOD SPECTRAL RESPONSE COEFFICIENT (SDS) = 0.093
8. 1-SECOND SPECTRAL RESPONSE COEFFICIENT (SD1) = 0.075
9. BASIC STRUCTURAL SYSTEM / SEISMIC RESISTING SYSTEM: ORDINARY PRECAST SHEAR WALLS
10. ANALYSIS PROCEDURE UTILIZED = EQUIVALENT LATERAL FORCE PROCEDURE
11. RESPONSE MODIFICATION COEFFICIENT (R) = 3.0
12. SEISMIC RESPONSE COEFFICIENT (CS) = 0.031

FLOOR LOAD SCHEDULE

MARK	OCCUPANCY/USE	SDL		SDL		LL	SL
		DEAD LOAD (PSF)	DESCRIPTION	POINT LOAD (LBS)	DESCRIPTION	LIVE LOAD (PSF)	SNOW LOAD (PSF)
A	TYP FLOOR	5	NOTE 1	-	-	40 (NR)	0
B	STAIRS	5	NOTE 1	-	-	100 (NR)	0
C	UPPER FLOOR	5	NOTE 1	-	-	40 (NR)	23 MINIMUM BALANCED OR SEE LOAD MAP (DRIFT + BALANCED)
D	ROOF	5	NOTE 1	-	-	20	23 MINIMUM BALANCED OR SEE LOAD MAP (DRIFT + BALANCED)
E	UPPER FLOOR	5	NOTE 1	-	-	40 (NR)	150 (SNOW PILE AT SNOW CHUTE)

NOTES:
1. SDL INDICATES SUPERIMPOSED DEAD LOAD AND IS DL IN ADDITION TO THE SELF WEIGHT OF THE PRIMARY STRUCTURAL SYSTEM.
2. (NR) INDICATES NON-REDUCIBLE LIVE LOAD.

FOUNDATION REACTION TABLE

GRID LOCATION	SERVICE LEVEL AXIAL LOAD			GRID LOCATION	SERVICE LEVEL AXIAL LOAD		
	DEAD LOAD (KIPS)	LIVE LOAD (KIPS)	TOTAL LOAD (KIPS)		DEAD LOAD (KIPS)	LIVE LOAD (KIPS)	TOTAL LOAD (KIPS)
AA-1	148	20	168	B-10	514	248	762
AA-2	209	51	260	B.4-9.6	132	18	150
A-3	365	147	512	B.4-10.1	161	10	171
A-4	424	145	569	B.7-9.6	95	7	102
A-5	348	131	479	B.7-10.1	150	7	157
A-6	347	131	478	B.9-9	310	115	425
A-7	377	144	521	B.9-10.1	214	59	273
A-8	507	229	736	C-1	371	122	493
A-10	392	159	551	C-3	493	191	684
A.1-1	326	86	412	C-4	435	168	603
A.1-2	288	110	398	C-5	465	178	643
A.5-1	74	0	74	C-6	465	178	643
A.5-4	85	4	89	C-7	435	168	603
B-1	551	232	783	C-8	373	140	513
B-3	211	82	293	C1-9	177	45	222
B-8	215	89	304	C1-10.1	109	26	135

Revisions: Date

VA U.S. Department of Veterans Affairs
VAMC MILWAUKEE
5000 W. National Avenue. Milwaukee, WI 53295

MARK A. VANDERHYDE REGISTERED NO. 10809552 STATE OF INDIANA PROFESSIONAL ENGINEER

ARCHITECT/ENGINEERS:

PROJECT LEAD
Architect, Structural Engineer, Civil Engineer
GUIDON DESIGN
905 N. CAPITOL AVE. SUITE 100 INDIANAPOLIS, IN. 46204
317.800.6388 WWW.GUIDONDESIGN.COM
SUSTAINABLE ARCHITECTURE + ENGINEERING

MEP Engineer
APOGEE CONSULTING GROUP
7330 Chapel Hill Road, Suite 202
Raleigh, NC 27607
Tele: 757-663-8513

Functional Design
CARL WALKER INC.
11920 S. Highland Ave. Suite 2107
Lombard, IL 60148
Tele: 630-307-3800

BID SET

Drawing Title: LOAD MAPS	Project Title: PARKING STRUCTURE LOT 7	Project Number: 14.1020.02	OFFICE OF FACILITIES MANAGEMENT
		Building Number: #152	
Approved for Design Concept: FACILITY MANAGEMENT DIVISION MANAGER	Location: CLEMENT J ZABLOCKI VAMC	Drawing Number: SI002	VA Project Number: 695-324
	Date: 1 DEC 2015 / Checked By: MAV / Drawn By: WJT		VA U.S. Department of Veterans Affairs

C:\Users\bthomas\Documents\14.1020.02-S-MVA-Garage_WJ.Thomas.rvt

GENERAL

THE STRUCTURE HAS BEEN DESIGNED FOR THE IN-SERVICE LOADS ONLY. THE METHODS, MEANS, PROCEDURES, AND SEQUENCES OF CONSTRUCTION ARE THE RESPONSIBILITY OF THE CONTRACTOR. THE STRUCTURE IS DESIGNED TO BE SELF-SUPPORTING AND STABLE AFTER THE BUILDING IS COMPLETE. IT IS THE CONTRACTOR'S RESPONSIBILITY TO DETERMINE ERECTION PROCEDURES AND SEQUENCE TO INSURE SAFETY OF THE BUILDING AND ITS COMPONENTS DURING ERECTION. THIS INCLUDES THE ADDITION OF NECESSARY SHORING, SHEETING, TEMPORARY BRACING, GUYS, TIEDOWNS, ETC.

THE STRUCTURAL DRAWINGS SHALL BE USED IN CONJUNCTION WITH CIVIL, ARCHITECTURAL, MECHANICAL, ELECTRICAL AND PLUMBING DRAWINGS AND SPECIFICATIONS.

THE GENERAL NOTES ON THE DRAWINGS ARE TO BE USED IN CONJUNCTION WITH THE FULL WRITTEN MATERIAL SPECIFICATIONS (IF ANY) FOR THE PROJECT. IF A DISCREPANCY OCCURS BETWEEN THE NOTES AND THE FULL SPECIFICATIONS, THE MORE STRINGENT REQUIREMENT SHALL APPLY.

NO PENETRATIONS THROUGH STRUCTURAL ELEMENTS, OTHER THAN THOSE SHOWN ON THE DRAWINGS, SHALL BE MADE WITHOUT THE APPROVAL OF THE STRUCTURAL ENGINEER.

CONCRETE MIX DESIGN SUBMITTAL

THE CONTRACTOR SHALL SUBMIT FOR THE REVIEW OF THE STRUCTURAL ENGINEER A MIX DESIGN FOR EACH PROPOSED CLASS OF CONCRETE. EACH MIX DESIGN SHALL BE IDENTIFIED BY A MIX NUMBER OR OTHER UNIQUE IDENTIFICATION. THE CONTRACTOR SHALL NOT VARY FROM THE MIX DESIGNS NOR USE ANY CONCRETE OTHER THAN THE APPROVED MIX DESIGNS WITHOUT THE APPROVAL OF THE STRUCTURAL ENGINEER. MIX DESIGN SUBMITTALS SHALL INCLUDE THE FOLLOWING INFORMATION:

1. MIX DESIGN NUMBER OR UNIQUE IDENTIFICATION AND INTENDED LOCATION OF PLACEMENT.
2. CEMENT TYPE, PROPORTION AND NAME OF MANUFACTURER.
3. FLY ASH PROPORTION (WHEN USED), LABORATORY ANALYSIS CERTIFICATION, AND NAME AND LOCATION OF SUPPLIER.
4. COURSE AGGREGATE PROPORTION, GRADATION REPORT, NAME AND LOCATION OF SUPPLIER.
5. FINE AGGREGATE PROPORTION, GRADATION REPORT, NAME AND LOCATION OF SUPPLIER.
6. MIXING WATER PROPORTION AND SOURCE.
7. ADMIXTURE DOSAGES, PRODUCT NAME(S) AND MANUFACTURER NAME(S).
8. FIBER REINFORCEMENT DOSAGE (WHEN USED), PRODUCT NAME AND MANUFACTURER NAME.
9. DESIGN 28-DAY COMPRESSIVE STRENGTH (F'C).
10. DESIGN SLUMP RANGE.
11. DESIGN AIR-ENTRAINMENT (FOR CONCRETE REQUIRING ENTRAINED AIR).
12. STATISTICAL ANALYSIS OF LABORATORY STRENGTH TEST DATA IN ACCORDANCE WITH "STANDARD DEVIATION" DETERMINATION OUTLINED IN ACI 318.

SHOP DRAWING SUBMITTALS

THE CONTRACTOR SHALL PREPARE DETAILED SHOP DRAWINGS TO ENABLE HIM TO FABRICATE, ERECT AND CONSTRUCT ALL PARTS OF THE WORK IN ACCORDANCE WITH THE DRAWINGS AND SPECIFICATIONS. THESE SHOP DRAWINGS WILL BE REVIEWED FOR GENERAL COMPLIANCE WITH THE DESIGN INTENT ONLY. THE CONTRACTOR IS RESPONSIBLE FOR ALL DIMENSIONS, ACCURACY AND FIT OF WORK.

ALL SHOP DRAWINGS SHALL BE REVIEWED BY THE CONTRACTOR PRIOR TO SUBMITTAL TO THE STRUCTURAL ENGINEER. DRAWINGS SUBMITTED WITHOUT CONTRACTOR'S REVIEW WILL BE RETURNED UNCHECKED.

SUBMIT ELECTRONIC VERSION OF SHOP DRAWINGS. SUBMIT SHOP DRAWINGS IN ADOBE PDF FORMAT AND UPLOAD TO BUZZSAW.

SUBMIT SHOP DRAWINGS FOR EACH OF THE FOLLOWING ITEMS:

1. CONCRETE REINFORCEMENT
2. CONCRETE MASONRY REINFORCEMENT
3. STRUCTURAL STEEL (INCLUDING DESIGN CALCULATIONS SEALED BY A PROFESSIONAL ENGINEER REGISTERED IN THE STATE WHERE THE PROJECT IS CONSTRUCTED FOR ALL CONNECTIONS NOT SPECIFICALLY DETAILED ON THE DRAWINGS)
4. STEEL DECK
5. PRECAST CONCRETE COMPONENTS (PRECAST LINTELS, ARCHITECTURAL PRECAST)
6. GLASS CURTAIN WALL SYSTEM (INCLUDING DESIGN CALCULATIONS AND CONNECTION DETAILS SEALED BY A PROFESSIONAL ENGINEER REGISTERED IN THE STATE WHERE THE PROJECT IS CONSTRUCTED)
7. AUGER CAST PILES
8. METAL MESH SYSTEM (INCLUDING DESIGN CALCULATIONS AND CONNECTION DETAILS SEALED BY A PROFESSIONAL ENGINEER REGISTERED IN THE STATE WHERE THE PROJECT IS CONSTRUCTED)

PRODUCT DATA SUBMITTALS

THE CONTRACTOR SHALL SUBMIT FOR APPROVAL PRODUCT DATA FOR THE SPECIFIC ITEMS LISTED BELOW. CONTRACTOR SHALL NOT USE PRODUCTS OTHER THAN THOSE SUBMITTED WITHOUT THE APPROVAL OF THE STRUCTURAL ENGINEER.

MANUFACTURER'S TRADE NAMES AND NUMBERS USED HEREIN ARE ONLY TO IDENTIFY COLORS, FINISHES, TEXTURES, AND PATTERNS AS A BASIS OF DESIGN. PRODUCTS OF AUTHORIZED EQUAL MANUFACTURER'S EQUIVALENT TO COLORS, FINISHES, TEXTURES, AND PATTERNS OF MANUFACTURERS LISTED THAT MEET REQUIREMENTS OF TECHNICAL SPECIFICATIONS IN EVERY RESPECT MAY BE ACCEPTABLE WITH SUBMITTAL OF A COMPLETED SUBSTITUTION REQUEST CONTAINING ALL PRODUCT DATA, TESTING AND ACTUAL SAMPLES, AND UPON APPROVAL IN WRITING BY CONTRACTING OFFICER.

SUBMIT ELECTRONIC VERSIONS OF PRODUCT DATA. SUBMIT PRODUCT DATA IN ADOBE PDF FORMAT AND UPLOAD TO BUZZSAW.

1. FIBER REINFORCEMENT FOR CONCRETE
2. DIAMOND PLATE DOWELS FOR SLABS ON GRADE
3. CONCRETE CURING COMPOUND
4. CONCRETE JOINT SEALANT
5. WATER STOPS
6. MASONRY JOINT REINFORCEMENT
7. EXPANSION ANCHORS
8. ADHESIVE ANCHORS
9. NON-SHRINK GROUT

FOUNDATIONS

FOUNDATION EXCAVATIONS AND SOIL RELATED WORK SHALL BE PERFORMED IN ACCORDANCE WITH THE GEOTECHNICAL REPORT NUMBER MR155043 PREPARED BY TERRACON DATED JUNE 02, 2015.

FOUNDATIONS HAVE BEEN DESIGNED BASED ON ASSUMED ALLOWABLE CAPACITIES INDICATED BELOW. CONTRACTOR SHALL ENGAGE A LICENSED GEOTECHNICAL ENGINEER TO REVIEW THE SOIL CONDITIONS AT THE SITE AS NECESSARY TO CONFIRM THE ALLOWABLE CAPACITIES PRIOR TO PLACEMENT OF THE FOUNDATIONS. CONFIRMATION OF THE ACCEPTABILITY OF THE SOILS SHALL BE REPORTED IN WRITING TO THE STRUCTURAL ENGINEER.

IF ACTUAL ALLOWABLE CAPACITIES ARE FOUND TO BE LESS THAN THE ASSUMED VALUES, THE CONTRACTOR SHALL NOTIFY THE STRUCTURAL ENGINEER IMMEDIATELY AND SHALL NOT PROCEED WITH FOUNDATION CONSTRUCTION WITHOUT REVIEW BY THE STRUCTURAL ENGINEER.

DESIGN ALLOWABLE PILE LOADS:

COMPRESSION: 155 KIPS
TENSION: 45 KIPS
LATERAL: 30 KIPS

FOR PURPOSES OF BIDDING, ESTIMATED PILE TIP ELEVATION IS 65 FEET BELOW THE BOTTOM OF THE PILE CAP. ACTUAL PILE TIP ELEVATION TO BE DETERMINED BY SPECIFIED TESTING PROGRAM. SEE SPECIFICATIONS.

FOUNDATIONS AND SOILS RELATED WORK SHALL BE INSPECTED BY A LICENSED GEOTECHNICAL ENGINEER. WRITTEN FIELD REPORTS SHALL BE FORWARDED TO THE STRUCTURAL ENGINEER AS SOON AS THEY BECOME AVAILABLE.

FOUNDATION CONDITIONS NOTED DURING CONSTRUCTION, THAT DIFFER FROM THOSE DESCRIBED IN THE GEOTECHNICAL REPORT, SHALL BE REPORTED TO THE STRUCTURAL ENGINEER AND GEOTECHNICAL ENGINEER BEFORE FURTHER CONSTRUCTION IS ATTEMPTED.

EXCAVATIONS FOR SPREAD FOOTINGS, TRENCH FOOTINGS, CONTINUOUS FOOTINGS AND MAT FOUNDATIONS SHALL BE CLEANED AND HAND TAMPED TO UNIFORM SURFACE AND SHALL BE PROTECTED AND MAINTAINED UNIFORM UNTIL CONCRETE IS PLACED.

BELOW-GRADE WALLS

DO NOT BACKFILL AGAINST BELOW-GRADE CONCRETE (OR MASONRY) WALLS UNTIL THE CONCRETE (OR MASONRY ASSEMBLAGE) HAS REACHED ITS 28-DAY COMPRESSIVE STRENGTH.

WHERE BACKFILL IS REQUIRED ON BOTH SIDES OF BELOW-GRADE WALLS, BACKFILL EVENLY ON EACH SIDE OF EACH WALL TO PREVENT UNBALANCED SOIL LOADS AGAINST THE WALL.

UNLESS NOTED OTHERWISE, DO NOT BACKFILL AGAINST BASEMENT WALLS UNTIL THE BASEMENT AND GROUND FLOOR SLABS HAVE BEEN COMPLETELY INSTALLED AND REACHED THEIR 28-DAY COMPRESSIVE STRENGTH AND ALL FLOOR FRAMING AND SLAB CONNECTIONS TO THE BASEMENT WALLS HAVE BEEN COMPLETELY INSTALLED.

WHERE BASEMENT WALLS OCCUR, BACKFILL EVENLY ON ALL SIDES OF THE BUILDING TO PREVENT UNBALANCED SOIL LOADS AGAINST THE BASEMENT STRUCTURE, UNLESS NOTED OTHERWISE.

WHERE IDENTIFIED ON THE PLANS, BRACE WALLS UNTIL ALL FLOOR SLABS HAVE BEEN PLACED AND CURED.

CONCRETE

REINFORCED CONCRETE HAS BEEN DESIGNED IN ACCORDANCE WITH THE BUILDING CODE REQUIREMENTS FOR STRUCTURAL CONCRETE (ACI 318) AND COMMENTARY (ACI 318R) AND ACI GUIDE 362.1R.

MIXING, TRANSPORTING, AND PLACING OF CONCRETE SHALL CONFORM TO THE LATEST EDITION OF THE SPECIFICATIONS FOR STRUCTURAL CONCRETE (ACI 301). READY-MIXED CONCRETE SHALL CONFORM TO THE REQUIREMENTS OF ASTM C94. IN CASE OF A DISCREPANCY, THE PLANS AND SPECIFICATIONS SHALL GOVERN.

CEMENT SHALL CONFORM TO ASTM C150, TYPE I, UNO.

FLY ASH SHALL CONFORM TO ASTM C618, CLASS C OR F. THE RATIO OF THE AMOUNT (BY WEIGHT) OF FLY ASH TO TOTAL CEMENTITIOUS MATERIALS IN THE MIX SHALL NOT EXCEED 25 PERCENT.

NORMAL WEIGHT AGGREGATES SHALL CONFORM TO ASTM C33.

WATER-REDUCING ADMIXTURES SHALL CONFORM TO ASTM C494.

AIR-ENTRAINING ADMIXTURES SHALL CONFORM TO ASTM C260 AND SHALL BE CERTIFIED BY THE MANUFACTURER TO BE COMPATIBLE WITH OTHER ADMIXTURES.

CALCIUM CHLORIDE ADMIXTURES OR ADMIXTURES CONTAINING MORE THAN 0.1 PERCENT CHLORIDE IONS SHALL NOT BE USED.

IN COLD WEATHER CONDITIONS, MIXING, PLACING, FINISHING, CURING AND PROTECTION OF CONCRETE SHALL BE PERFORMED IN ACCORDANCE WITH THE LATEST EDITION OF ACI 306R, COLD WEATHER CONCRETING.

IN HOT WEATHER CONDITIONS, MIXING, PLACING, FINISHING, CURING AND PROTECTION OF CONCRETE SHALL BE PERFORMED IN ACCORDANCE WITH THE LATEST EDITION OF ACI 305R, HOT WEATHER CONCRETING.

USE OF CONSTRUCTION JOINTS AT LOCATIONS OTHER THAN THOSE INDICATED ON THE DRAWINGS SHALL BE SUBMITTED TO THE STRUCTURAL ENGINEER FOR REVIEW.

SLUMP FOR PUMPED CONCRETE SHALL BE MEASURED AT POINT OF DISCHARGE.

NORMAL WEIGHT CONCRETE SHALL BE USED IN THE FOLLOWING AREAS AND SHALL HAVE THE PROPERTIES AS SHOWN BELOW:

DESCRIPTION	F'C PSI, MIX	MAXIMUM CHLORIDE ION CONTENT	MAX W/C RATIO	AVERAGE ENTRAINED AIR	MINIMUM CEMENTITIOUS MATERIALS CONTENT, LB/CYD	MAXIMUM SLUMP	MAXIMUM SLUMP FOR CONCRETE CONTAINING HIGH-RANGE WATER-REDUCING ADMIXTURE	MAXIMUM COARSE AGGREGATE SIZE
FOUNDATIONS & PILE CAPS	4000 STD	0.30%	0.48	N/A	470	4"	8" AAC	1.5"
FOUNDATION WALLS & GRADE BEAMS	4000 STD	0.30%	0.48	N/A	470	4"	8" AAC	1"
RETAINING WALLS & CURBS/SIDEWALKS/SLABS EXPOSED TO DE-ICERS	4000 CNA	0.15%	0.45	6% +/- 1%	517	4"	8" AAC	1"
SLABS-ON-GRADE	4000 CNA/SF	0.15%	0.48	6% +/- 1%	470	4"	8" AAC	1"

NOTES:

1. "STD" INDICATES A CONCRETE MIX DESIGN IN ACCORDANCE WITH SPECIFICATION WHICH DOES NOT REQUIRE A SILICA FUME, GGBS/FLY ASH OR CALCIUM NITRITE ADMIXTURE.
2. "CNA" INDICATES A CONCRETE MIX DESIGN IN ACCORDANCE WITH SPECIFICATION WHICH CONTAINS 3 GAL/CYD OF CALCIUM NITRITE CORROSION-INHIBITOR ADMIXTURE.
3. "SF" INDICATES A CONCRETE MIX DESIGN WITH 1.5 LBS STRUCTURAL FIBERS PER CYD OF CONCRETE.
4. "AAC" MEANS SLUMP IS AFTER ADMIXTURE IS ADDED TO CONCRETE WITH 2 TO 4 INCH SLUMP.

AUGER CAST PILES

CONTRACTOR SHALL BASE BIDS ON THE INDICATED NUMBER, DIAMETER AND DESIGN LENGTH OF AUGER CAST PILES PLUS ONE TEST PILE OF THE SAME DIAMETER AND LENGTH. PILE CONTRACTOR SHALL SUBMIT WITH BID WRITTEN CERTIFICATION THAT CONTRACTOR HAS THE TECHNICAL QUALIFICATIONS, EXPERIENCE, TRAINED PERSONNEL AND FACILITIES TO INSTALL AUGER CAST PILES AS INDICATED.

SUBMIT TO THE STRUCTURAL ENGINEER THE PROPOSED CONCRETE GROUT MIX DESIGN FOR REVIEW PRIOR TO COMMENCEMENT OF PILING OPERATIONS.

GROUT FLUIDIFIER SHALL CONFORM TO ASTM C 937, EXCEPT THAT EXPANSION SHALL NOT EXCEED 4 PERCENT. THE FLUIDIFIER SHALL BE A COMPOUND POSSESSING CHARACTERISTICS THAT WILL INCREASE THE FLOWABILITY OF THE MIXTURE, ASSIST IN THE DISPERSAL OF CEMENT GRAINS, AND NEUTRALIZE THE SETTING SHRINKAGE OF THE HIGH-STRENGTH CEMENT MORTAR.

LOCATE EXISTING UNDERGROUND UTILITIES BEFORE INSTALLING PILES. IF ADJACENT UTILITIES ARE TO REMAIN IN PLACE, PROVIDE PROTECTION FROM DAMAGE DURING PILING OPERATIONS. SHOULD UNCHARTED OR INCORRECTLY CHARTED PIPING OR OTHER UTILITIES BE ENCOUNTERED DURING EXCAVATION, ADAPT INSTALLATION PROCEDURE IF NECESSARY TO PREVENT DAMAGE TO UTILITIES. COOPERATE WITH OWNER AND UTILITY COMPANIES IN KEEPING SERVICES AND FACILITIES IN OPERATION WITHOUT INTERRUPTION. REPAIR DAMAGED UTILITIES TO SATISFACTION OF UTILITY OWNER.

PROTECT STRUCTURES, UTILITIES, SIDEWALKS, PAVEMENTS AND OTHER FACILITIES FROM DAMAGE CAUSED BY PILE INSTALLATION OPERATIONS.

ENGAGE A QUALIFIED LAND SURVEYOR OR PROFESSIONAL ENGINEER TO PERFORM SURVEYS, LAYOUTS AND MEASUREMENTS FOR AUGER CAST PILES.

RECORD AND MAINTAIN DETAILED INFORMATION PERTINENT TO EACH PILE AND COORDINATE WITH OWNER'S TESTING AND INSPECTING AGENCY TO PROVIDE DATA FOR REQUIRED REPORTS.

CONSTRUCT A TEST PILE OF SAME DIAMETER, LENGTH AND DEPTH AS PERMANENT PILES TO VERIFY PILE DESIGN LOAD AND TO DEMONSTRATE INSTALLER'S CONSTRUCTION METHODS, EQUIPMENT, STANDARDS OF WORKMANSHIP, AND TOLERANCES. UNLESS NOTED ON THE DRAWINGS, CONSTRUCT TEST PILE AT LEAST 3 DIAMETERS CLEAR OF PERMANENT PILES.

TESTING SHALL BE PERFORMED BY THE CONTRACTOR IN ACCORDANCE WITH ASTM D1143, ASTM D3689 AND ASTM D3966 AND SHALL BE OBSERVED BY A REPRESENTATIVE OF THE OWNER'S TESTING AGENCY. IF OWNER DETERMINES THAT TEST PILE DOES NOT COMPLY WITH REQUIREMENTS, CAST AND TEST ADDITIONAL PILES UNTIL COMPLIANCE IS ASSURED.

INSTALL PILES TO DEPTHS AND ELEVATIONS INDICATED. CAST TOPS OF PILES SQUARE WITH PILE AXIS. PLACE CONTINUOUS CENTER REINFORCING THROUGH THE HOLLOW-STEMMED AUGER PRIOR TO PLACEMENT OF GROUT. USE BAR SPACERS TO CENTER REINFORCING BARS AND PROPERLY POSITION FOR EMBEDMENT IN PILE CAPS.

INSTALL PILES TO THE FOLLOWING TOLERANCES:

HORIZONTAL: MAXIMUM 3 INCHES FROM DESIGN LOCATION
TOP OF PILE: MAXIMUM 1 INCH FROM DESIGN TOP ELEVATION
PLUMBNESS: MAXIMUM 2 PERCENT FROM PLUMB

THE OWNER'S GEOTECHNICAL CONSULTANT SHALL CONTINUOUSLY INSPECT ALL PILE OPERATIONS. THE PILE CONTRACTOR SHALL COOPERATE WITH THE INSPECTOR IN THE PERFORMANCE OF THE PILING WORK. THE INSPECTOR SHALL IMMEDIATELY NOTIFY THE OWNER, PILE CONTRACTOR AND STRUCTURAL ENGINEER IF ANY PILE IS NOT IN CONFORMANCE WITH THE DESIGN DOCUMENTS. IF THE STRUCTURAL ENGINEER DEEMS THAT MODIFICATIONS OR ADDITIONAL PILES ARE REQUIRED, THE COST OF MODIFYING, REMOVING AND REPLACING PILES THAT ARE NOT IN CONFORMANCE SHALL BE BORNE BY THE PILE CONTRACTOR, AT NO ADDITIONAL COST TO THE OWNER. ABANDONED PILES SHALL BE CUT OFF A MINIMUM OF 12 INCHES BELOW THE BOTTOM OF THE PILE CAP AND WILL NOT BE PAID FOR BY THE OWNER.

PREPARE A MINIMUM OF SIX CONCRETE GROUT SPECIMENS FOR EACH DAY DURING WHICH PILES ARE PLACED. TEST TWO SPECIMENS AT 7 DAYS, TWO AT 28 DAYS, AND HOLD TWO IN RESERVE FOR LATER TESTING IF REQUIRED. CURE AND TEST IN ACCORDANCE WITH ASTM 109.

SHORING/RE-SHORING

THE SHORING AND/OR RE-SHORING DESIGN FOR CONCRETE FRAME SYSTEMS IS THE RESPONSIBILITY OF THE CONTRACTOR. TEMPORARY SHORING FOR SLABS, BEAMS, AND GIRDERS SHALL BE ADEQUATE TO CARRY THE TOTAL WEIGHT OF THE SLAB-BEAM-GIRDER SYSTEM AND ANY TEMPORARY CONSTRUCTION LOADS TO BE IMPOSED ON THE STRUCTURAL SYSTEM. SHORING FOR A LEVEL SHALL NOT BE REMOVED UNTIL THE CONCRETE AT THAT LEVEL HAS ATTAINED THE SPECIFIED COMPRESSIVE STRENGTH (F'C). REMOVAL OF SHORING AND/OR RESHORING SHALL NOT CAUSE OVERSTRESSING OF ANY STRUCTURAL ELEMENTS.

CONCRETE SLABS ON GRADE

SLABS ON GRADE SHALL BE CONSTRUCTED IN ACCORDANCE WITH THE LATEST EDITION OF THE GUIDE FOR CONCRETE FLOOR AND SLAB CONSTRUCTION (ACI 302.1R).

PLACE CONCRETE IN A MANNER SO AS TO PREVENT SEGREGATION OF THE MIX. DELAY FLOATING AND TROWELING OPERATIONS UNTIL THE CONCRETE HAS LOST SURFACE WATER SHEEN OR ALL FREE WATER. DO NOT SPRINKLE FREE CEMENT ON THE SLAB SURFACE.

PROVIDE CURING OF CONCRETE SLABS IMMEDIATELY AFTER FINISHING USING A SPRAYED ON DISSIPATING-RESIN LIQUID CURING COMPOUND CONFORMING TO ASTM C309, UNLESS NOTED OTHERWISE. ALL SCUFFS OR ABRASIONS TO THE CURING MEMBRANE SHALL BE RECOATED DAILY. OTHER CURING METHODS MAY BE USED WITH APPROVAL BY THE STRUCTURAL ENGINEER.

UNLESS SHOWN OR NOTED OTHERWISE, PROVIDE CONTROL OR CONSTRUCTION JOINTS IN SLABS-ON-GRADE AT A MAXIMUM SPACING OF 36 TIMES THE SLAB THICKNESS. PROVIDE JOINTS AT ALL COLUMN LOCATIONS. LOCATE JOINTS TO ELIMINATE RE-ENTRANT CORNERS AND TO CREATE SQUARE OR RECTANGULAR SECTIONS WITH MAXIMUM LONG SIDE TO SHORT SIDE RATIO OF 1.5 TO 1.

CONTROL JOINTS IN SLABS ON GRADE SHALL NOT RECEIVE JOINT FILLER MATERIAL UNLESS NOTED OTHERWISE.

STRUCTURAL PRECAST CONCRETE (GENERAL)

SUPPLIER OF STRUCTURAL PRECAST CONCRETE IS RESPONSIBLE FOR THE DESIGN, DETAILING, AND INSTALLATION OF THE PRECAST MEMBERS AND CONNECTIONS. DESIGN AND INSTALL PANELS IN ACCORDANCE WITH ACI 318 AND THE PCI DESIGN HANDBOOK, CURRENT EDITIONS. MANUFACTURE IN ACCORDANCE WITH MANUAL FOR QUALITY CONTROL FOR PLANTS AND PRODUCTION OF STRUCTURAL PRECAST CONCRETE PRODUCTS (PCI MNL 116).

THE PRECAST SUPPLIER SHALL ENGAGE A PROFESSIONAL ENGINEER LICENSED IN THE STATE WHERE THE PROJECT IS CONSTRUCTED TO PERFORM THE DESIGN.

PRECAST SUPPLIER IS RESPONSIBLE FOR TEMPORARY BRACING, GUYS, TIEDOWNS, DEADMEN, ETC. AS REQUIRED TO SUPPORT STRUCTURAL PRECAST UNTIL THE STRUCTURAL FRAMING SYSTEM AND DECKING INSTALLATION ARE COMPLETE AND FINAL STABILITY IS ACHIEVED.

CONTRACTOR SHALL DESIGN ALL PRECAST MEMBERS AND ERECTION ASSEMBLIES FOR DESIGN AND TEMPORARY ERECTION FORCES, ERECTION SEQUENCING, GUY STAYING AND SHORING. CONTRACTOR SHALL CONFIRM ALL APPROPRIATE CONNECTIONS ARE COMPLETED AND REQUIRED GROUTING HAS OCCURRED TO ENSURE STABILITY DURING CONSTRUCTION BEFORE ERECTING STRUCTURE VERTICALLY.

EMBEDS AND OTHER STEEL ITEMS TO BE EMBEDDED IN THE PRECAST ARE TO BE PROVIDED AND INSTALLED BY THE PRECASTER, UNLESS NOTED OTHERWISE.

STRUCTURAL STEEL ITEMS TO BE FIELD WELDED TO EMBEDDED ITEMS IN THE PRECAST ARE TO BE PROVIDED AND INSTALLED BY THE STEEL ERECTOR, UNLESS NOTED OTHERWISE.

EMBEDS AND OTHER ITEMS TO BE EMBEDDED IN CAST-IN-PLACE CONCRETE SHALL BE SUPPLIED BY THE PRECASTER AND INSTALLED BY THE CONCRETE CONTRACTOR, UNLESS NOTED OTHERWISE.

IF THE DETAILS INDICATED ON THESE DRAWINGS NEED TO BE MODIFIED TO ACCOMMODATE THE PRECAST SUPPLIER'S FABRICATION OR INSTALLATION STANDARDS, THE PRECASTER MUST INFORM THE STRUCTURAL ENGINEER AND ALL AFFECTED FABRICATORS AND CONTRACTORS PRIOR TO FABRICATION OF AFFECTED MATERIALS. MODIFICATIONS REQUESTED BY THE PRECASTER AFTER THE AFFECTED ITEMS ARE FABRICATED SHALL BE SOLELY THE RESPONSIBILITY OF THE PRECASTER (INCLUDING ENGINEERING, MATERIAL AND INSTALLATION) AND SHALL BE PROVIDED AT NO ADDITIONAL COST TO THE PROJECT.

COORDINATE ALL OPENINGS, REVEALS, DRIP EDGES, BLOCKOUTS, INSERTS, ETC. TO BE CAST INTO PRECAST MEMBERS WITH STRUCTURAL, ARCHITECTURAL, MECHANICAL, AND ELECTRICAL DRAWINGS. AS PART OF THE SUBMITTAL PROCESS COORDINATION OF EXACT SIZES IS REQUIRED AND SHALL BE PERFORMED BY THE CONTRACTOR.

DESCRIPTION	F'C PSI, MIX	MAX W/C RATIO	AVERAGE ENTRAINED AIR	MAXIMUM SLUMP	MAXIMUM COARSE AGGREGATE SIZE
COLUMNS, LIGHT WALLS & WALLS	6000 STD	0.38	5.5% +/- 1%	N/A	.75"
BEAMS, DOUBLE TEES (PRETOPPED), STAIRS & SPANDRELS	6000 CNA	0.38	5.5% +/- 1%	N/A	.75"
CAST-IN-PLACE TOPPING, WASHES & POUR STRIPS	4000 CNA	0.40	5.5% +/- 1%	N/A	.75"

NOTES:

1. "STD" INDICATES A CONCRETE MIX DESIGN IN ACCORDANCE WITH SPECIFICATION WHICH DOES NOT REQUIRE A SILICA FUME, GGBS/FLY ASH OR CALCIUM NITRITE ADMIXTURE.
2. "CNA" INDICATES A CONCRETE MIX DESIGN IN ACCORDANCE WITH SPECIFICATION WHICH CONTAINS 3 GAL/CYD OF CALCIUM NITRITE CORROSION-INHIBITOR ADMIXTURE.
3. MAXIMUM WATER SOLUBLE CHLORIDE ION CONTENT FROM ALL CONCRETE CONSTITUENTS SHALL NOT EXCEED 0.06% OF WEIGHT OF CEMENT FOR ALL PRESTRESSED CONCRETE ELEMENTS, 0.15% OF WEIGHT OF CONCRETE FOR CAST-IN-PLACE TOPPINGS, WASHES & POUR STRIPS AND 0.30% FOR ALL OTHER CONCRETE ELEMENTS.

LOAD BEARING PRECAST CONCRETE WALL PANELS

LOAD BEARING PRECAST WALL PANELS ARE USED TO SUPPORT GRAVITY AND LATERAL LOADS. PRECAST PANELS ARE TO BE DESIGNED FOR THE REACTIONS AND LOAD INFORMATION INDICATED ON THE DRAWINGS AND IN ACCORDANCE WITH THE GOVERNING BUILDING CODE.

REINFORCING STEEL

REINFORCING STEEL SHALL BE DEFORMED BARS CONFORMING TO ASTM A615 AND SHALL HAVE A MINIMUM YIELD STRENGTH OF 60,000 PSI.

REINFORCING BAR DETAILING, FABRICATING, AND PLACING SHALL CONFORM TO THE LATEST EDITION OF THE FOLLOWING STANDARDS: ACI 301, ACI 315, ACI 318 AND ACI DETAILING MANUAL (SP66).

CONCRETE PROTECTION SHALL BE PER ACI362.1R, EXCEPT AS NOTED ON DRAWINGS AND SPECIFIED HEREIN. SPECIFIC DRAWINGS AND DETAILS MAY OR MAY NOT INDICATE EPOXY COATING OR UNCOATED REINFORCING. IN AREAS OF DISPUTE, THIS SCHEDULE SHALL GOVERN IN ALL CASES.

DESCRIPTION	COVER	PROTECTION
PILE CAPS	3"	UNCOATED
GRADE BEAMS TOP REINFORCING	2"	UNCOATED
GRADE BEAMS BOTTOM REINFORCING	3"	UNCOATED
GRADE BEAMS SIDE REINFORCING	1.5"	UNCOATED
FOOTINGS	3"	UNCOATED
SLAB-ON-GRADE	2" FROM TOP	EPOXY COATED
WALLS	2"	EPOXY COATED
PRECAST COLUMNS	2"	UNCOATED
PRECAST BEAMS	2"	UNCOATED
PRECAST LIGHT WALLS	1.5"	UNCOATED
PRECAST DOUBLE TEES (PRETOPPED)	2"	UNCOATED
PRECAST WALLS	1.5"	UNCOATED
PRECAST STAIRS	0.75"	UNCOATED
WASHES	1.5"	EPOXY COATED

REINFORCING STEEL SHALL NOT BE TACK WELDED, WELDED, HEATED OR CUT UNLESS INDICATED ON THE CONTRACT DOCUMENTS OR APPROVED BY THE STRUCTURAL ENGINEER.

WHERE LAP SPLICE LENGTHS ARE NOT SHOWN OR NOTED, PROVIDE A CLASS "B" LAP.

ALL 90 DEGREE AND 180 DEGREE BENDS SHOWN ON THE DRAWINGS SHALL BE STANDARD HOOKS, UNLESS NOTED OTHERWISE.

PROVIDE CORNER BARS OF SAME SIZE AND SPACING AS HORIZONTAL BARS AT CORNERS OF ALL WALLS AND GRADE BEAMS. LAP SPLICE CORNER BARS WITH STRAIGHT BARS.

UNLESS OTHERWISE SHOWN OR NOTED, PROVIDE 2-#5 BARS (ONE EACH FACE) AROUND UNFRAMED OPENINGS IN CONCRETE WALLS AND GRADE BEAMS. PLACE BARS PARALLEL TO THE SIDES OF THE OPENING AND EXTEND 24" BEYOND CORNERS.

FIBER REINFORCEMENT

FIBER REINFORCEMENT SHALL BE 3/4" LONG, VIRGIN (NON-RECYCLED) NYLON OR POLYPROPYLENE FIBERS, INTRODUCED INTO THE CONCRETE MIX AT THE BATCH PLANT, IN ACCORDANCE WITH THE MANUFACTURER'S RECOMMENDATIONS. DOSAGE SHALL BE 1.5 POUNDS PER CUBIC YARD OF CONCRETE.

CONCRETE TESTING

MAKE ONE SET OF TEST CYLINDERS IN ACCORDANCE WITH ASTM C31 FOR EACH DAY'S POUR AND FOR EACH 100 CUBIC YARDS. EACH SET SHALL INCLUDE ONE SPECIMEN TESTED AT 7 DAYS, 2 SPECIMENS TESTED AT 28 DAYS AND ONE SPECIMEN RETAINED IN RESERVE TO BE TESTED AT THE DIRECTION OF THE STRUCTURAL ENGINEER. SPARE CYLINDER MAY BE DISCARDED 90 DAYS AFTER CASTING UNLESS DIRECTED OTHERWISE BY THE STRUCTURAL ENGINEER. THIS SET OF TEST CYLINDERS SHALL BE PROTECTED AGAINST FREEZING.

WHEN THE AMBIENT TEMPERATURE IS EXPECTED TO FALL BELOW 40 DEGREES DURING THE COURSE OF A CONCRETE POUR OR SUBSEQUENT CURING PROCESS, AN ADDITIONAL SET OF CONCRETE TEST CYLINDERS SHALL BE MADE AND TESTED. THESE CYLINDERS SHALL BE STORED IMMEDIATELY ADJACENT TO, AND CURED UNDER THE SAME CONDITIONS AS THE BUILDING CONCRETE. SPECIAL CURING BOXES ARE NOT PERMITTED FOR THESE TEST CYLINDERS.

FORWARD COPIES OF TEST RESULTS TO THE ARCHITECT, STRUCTURAL ENGINEER, READY-MIX SUPPLIER AND CONTRACTOR WITHIN 24 HOURS AFTER TESTING.

MASONRY

CONCRETE MASONRY HAS BEEN DESIGNED IN ACCORDANCE WITH THE LATEST EDITION OF THE BUILDING CODE REQUIREMENTS FOR CONCRETE MASONRY STRUCTURES (ACI 530).

CONCRETE MASONRY SHALL CONSIST OF HOLLOW UNITS CONFORMING TO THE REQUIREMENTS OF ASTM C90, WITH A MINIMUM NET AREA COMPRESSIVE STRENGTH OF 1900 PSI. CONCRETE MASONRY ASSEMBLAGES SHALL HAVE A MINIMUM COMPRESSIVE STRENGTH (F'M) OF 1,500 PSI AT 28 DAYS.

MORTAR SHALL BE TYPE S PROPORTIONED IN ACCORDANCE WITH ASTM C270.

GROUT FOR REINFORCED MASONRY SHALL BE PROPORTIONED IN ACCORDANCE WITH ASTM C476. COARSE AND FINE AGGREGATES SHALL CONFORM TO ASTM C404. USE COARSE GROUT FOR ALL GROUTING EXCEPT HIGH-LIFT POURS DEFINED BY ACI 530-05 TABLE 1.16.1, WHERE FINE GROUT SHALL BE USED.

PROVIDE 9-GAUGE GALVANIZED STEEL WIRE JOINT REINFORCEMENT IN ALL MASONRY CONSTRUCTION. REINFORCEMENT SHALL BE CONTINUOUS AND BE LAPPED EIGHT INCHES AT SPLICES. CUT REINFORCEMENT AT ALL CONTROL AND EXPANSION JOINTS. SPACE REINFORCEMENT AT 8" ON CENTER FOR PARAPETS AND BELOW GROUND FLOOR ELEVATION. ELSEWHERE SPACE REINFORCEMENT AT 16 INCHES ON CENTER.

BEAMS AND LINTELS SHALL BEAR A MINIMUM OF 8 INCHES ONTO SUPPORTING MASONRY, UNLESS NOTED OTHERWISE. BEARING FOR ALL BEAMS, LINTELS, JOISTS, ETC. SHALL BE GROUTED SOLID A MINIMUM OF ONE COURSE (8 INCHES) BELOW BEARING ELEVATION, UNLESS NOTED OTHERWISE.

EXPANSION ANCHORS

EXPANSION ANCHORS SHALL BE CARBON STEEL ANCHORS AS MANUFACTURED BY HILTI FASTENING SYSTEMS OR AN EQUIVALENT SUBSTITUTE APPROVED BY THE STRUCTURAL ENGINEER AND SHALL BE INSTALLED IN CONFORMANCE WITH THE MANUFACTURER'S RECOMMENDATIONS.

EXPANSION ANCHORS SHALL NOT BE INSTALLED IN CONCRETE UNTIL IT HAS ATTAINED ITS SPECIFIED MINIMUM 28 DAY COMPRESSIVE STRENGTH.

ADHESIVE ANCHORS

ADHESIVE ANCHORS SHALL BE HILTI "HIT HY200" FOR SOLID SUBSTRATE AND HILTI "HIT HY70" FOR HOLLOW SUBSTRATE OR AN EQUIVALENT SUBSTITUTE APPROVED BY THE STRUCTURAL ENGINEER, UNLESS NOTED OTHERWISE ON PLANS. ANCHORS SHALL BE INSTALLED IN CONFORMANCE WITH THE MANUFACTURER'S RECOMMENDATIONS BY INSTALLERS TRAINED BY THE MANUFACTURER'S REPRESENTATIVE.

MINIMUM EMBEDMENT DEPTH SHALL BE 8 BOLT DIAMETERS UNLESS NOTED OTHERWISE.

NON-SHRINK GROUT

GROUT SHALL BE A NON-METALLIC, SHRINKAGE RESISTANT (WHEN TESTED IN ACCORDANCE WITH THE LATEST EDITION OF ASTM C827 OR CRD-C621), PREMIXED, NON-CORROSIVE, NON-STAINING PRODUCT CONTAINING PORTLAND CEMENT, SILICA SANDS, SHRINKAGE COMPENSATING AGENTS AND FLUIDITY IMPROVING COMPOUNDS. GROUT SHALL HAVE A MINIMUM COMPRESSIVE STRENGTH (F'C) OF 5,000 PSI IN 28 DAYS.

WATERSTOPS

SELF-EXPANDING STRIP WATER STOPS SHALL BE SINKO FLEX UNLESS NOTED OTHERWISE. INSTALL IN ACCORDANCE WITH MANUFACTURER'S WRITTEN INSTRUCTIONS.

MASTIC COATING

MASTIC COATING FOR PROTECTION OF INDICATED ITEMS SHALL BE BITUMASTIC 50 COAL TAR MASTIC BY CARBOLINE OR EQUIVALENT SUBSTITUTE APPROVED BY THE STRUCTURAL ENGINEER. INSTALL AT LOCATIONS INDICATED ON DRAWINGS.

UNLESS NOTED OTHERWISE, APPLY MASTIC TO A COATING THICKNESS OF 18 MILS. PROVIDE FULL COVERAGE OVER ITEMS INDICATED TO RECEIVE COATING.

STRUCTURAL STEEL

STRUCTURAL STEEL DETAILING, FABRICATION AND ERECTION SHALL CONFORM TO THE ANSI/AISC 360 SPECIFICATION FOR STRUCTURAL STEEL BUILDINGS, LATEST EDITION WITH AMENDMENTS, AND THE AISC 303 CODE OF STANDARD PRACTICE FOR STEEL BUILDINGS AND BRIDGES, LATEST EDITION WITH AMENDMENTS.

STRUCTURAL STEEL WIDE FLANGE SHAPES SHALL CONFORM TO ASTM A992, 50 KSI.

STRUCTURAL STEEL PLATES AND ROLLED SHAPES OTHER THAN WIDE-FLANGE SHAPES SHALL CONFORM TO ASTM A36, UNLESS NOTED OTHERWISE.

STRUCTURAL STEEL TUBING SHALL CONFORM TO ASTM A500, GRADE B.

STRUCTURAL PIPE SHALL CONFORM TO ASTM A53, GRADE B.

ANCHOR RODS SHALL CONFORM TO ASTM F1554, GRADE 36, UNLESS NOTED OTHERWISE.

STEEL STUDS SHALL CONFORM TO ASTM A108.

BOLTED CONNECTIONS SHALL CONFORM TO THE SPECIFICATION FOR STRUCTURAL JOINTS USING ASTM A325 OR A490 BOLTS, APPROVED BY THE RESEARCH COUNCIL ON STRUCTURAL CONNECTIONS OF THE ENGINEERING FOUNDATION. BOLTED CONNECTIONS FOR STRUCTURAL STEEL MEMBERS SHALL BE MADE WITH 3/4" DIAMETER A325 BOLTS, UNLESS NOTED OTHERWISE. BOLTED CONNECTIONS SHALL BE TIGHTENED TO THE SNUG TIGHT CONDITION, EXCEPT BOLTED CONNECTIONS IN BRACE ELEMENTS ARE TO BE FULLY PRETENSIONED WITH CLASS A FAYING SURFACES.

WELDING PROCEDURES SHALL CONFORM TO THE LATEST EDITION OF THE AMERICAN WELDING SOCIETY'S STRUCTURAL WELDING CODE FOR STEEL ANSI/AWS D1.1.

WELDED CONNECTIONS USING ASTM A992 STEEL AS A BASE METAL SHALL BE MADE WITH E70XX LOW HYDROGEN ELECTRODES. UNLESS OTHERWISE SHOWN OR NOTED ON THE DRAWINGS, OTHER WELDED CONNECTIONS MAY BE MADE WITH STANDARD E70XX ELECTRODES.

STRUCTURAL STEEL THAT RECEIVES FINISH PAINT SHALL BE SHOP-PRIMED WITH A RUST-INHIBITING PRIMER, UNLESS NOTED OTHERWISE ON THE DRAWINGS. CONTRACTOR SHALL VERIFY PRIMER IS COMPATIBLE WITH FINISH COAT SYSTEM SPECIFIED BY THE ARCHITECT. COORDINATE FINISH PAINTING REQUIREMENTS WITH THE ARCHITECT.

STRUCTURAL STEEL THAT IS NOT EXPOSED IN THE FINISHED CONSTRUCTION AND DOES NOT RECEIVE FINISH PAINT SHALL NOT BE SHOP-PRIMED, UNLESS NOTED OTHERWISE ON THE DRAWINGS.

STRUCTURAL STEEL NOTED TO BE GALVANIZED SHALL BE HOT-DIP GALVANIZED IN CONFORMANCE WITH ASTM A123.

DO NOT PAINT OR GALVANIZE THE FOLLOWING SURFACES:

1. SURFACES TO BE WELDED.
2. SURFACES TO RECEIVE BOLTED SLIP-CRITICAL CONNECTIONS.
3. SURFACES TO RECEIVE SHEAR STUD CONNECTIONS.
4. SURFACES TO RECEIVE SPRAYED-ON FIREPROOFING.

ALL ABRASIONS TO GALVANIZED SURFACES OR SURFACES TO RECEIVE AN ARCHITECTURAL FINISH COAT SHALL BE TOUCHED-UP AFTER ERECTION IS COMPLETE. FOR PAINTED STEEL, USE A PRIMER EQUIVALENT TO THE SHOP PAINT. FOR GALVANIZED STEEL, USE A ZINC-RICH COLD-GALVANIZING PAINT.

DESIGN CONNECTIONS NOT SHOWN IN ACCORDANCE WITH THE ASD SPECIFICATION AND MANUAL OF STEEL CONSTRUCTION. UNLESS NOTED OTHERWISE ON THE DRAWINGS, DESIGN BEAM CONNECTIONS NOT SHOWN, TO SUPPORT A MINIMUM OF A 10 KIP SHEAR REACTION. PROVIDE NO LESS THAN 2 BOLTS IN ANY SINGLE LINE OF BOLTS, UNLESS SPECIFICALLY INDICATED ON THE DRAWINGS.

PROVIDE L4X4X1/4 FRAMED OPENINGS FOR ALL ROOF PENETRATIONS 12 INCHES OR LARGER ALONG ANY SIDE, UNLESS LARGER FRAMING IS INDICATED. REFER TO MECHANICAL AND PLUMBING DRAWINGS FOR PENETRATIONS. COORDINATE FRAMED OPENING SIZES AND LOCATIONS WITH THE MECHANICAL AND PLUMBING CONTRACTORS.

GALVANIZE ALL EXPOSED STEEL.

ELEVATORS

CONTRACTOR SHALL COORDINATE ELEVATOR PITS, SHAFTS, SLAB OPENINGS, FRAMING LOCATIONS, GUIDE RAIL SUPPORTS, DIVIDER BEAMS, HOIST BEAMS AND SUMP PITS WITH ELEVATOR SUPPLIER PRIOR TO CONSTRUCTION AS REQUIRED FOR PROPER INSTALLATION AND OPERATION.

COORDINATE ANY REQUIRED STRUCTURAL MODIFICATIONS WITH THE STRUCTURAL ENGINEER PRIOR TO FABRICATION AND/OR INSTALLATION OF ANY STRUCTURAL ELEMENTS.

STEEL ROOF DECK

PROVIDE AND ERECT STEEL DECK IN ACCORDANCE WITH THE LATEST EDITION OF THE STEEL DECK INSTITUTE'S SPECIFICATIONS AND CODE OF STANDARD PRACTICE.

DECK MANUFACTURER SHALL PROVIDE ALL ROOF DECK ACCESSORIES, INCLUDING CLOSURES, SUPPLEMENTARY FRAMING, AND SUMP PANS, WHETHER OR NOT SUCH ITEMS ARE DETAILED ON THE CONTRACT DOCUMENTS.

FASTEN ROOF DECK TO STEEL SUPPORTS AS INDICATED ON THE DRAWINGS. PERFORM WELDING IN ACCORDANCE WITH ANSI/AWS D1.3.

ROOF DECK SHALL BE INSTALLED IN A MINIMUM THREE SPAN CONDITION.

PROVIDE STEEL ROOF DECK WITH FINISH AS INDICATED ON THE DRAWINGS.

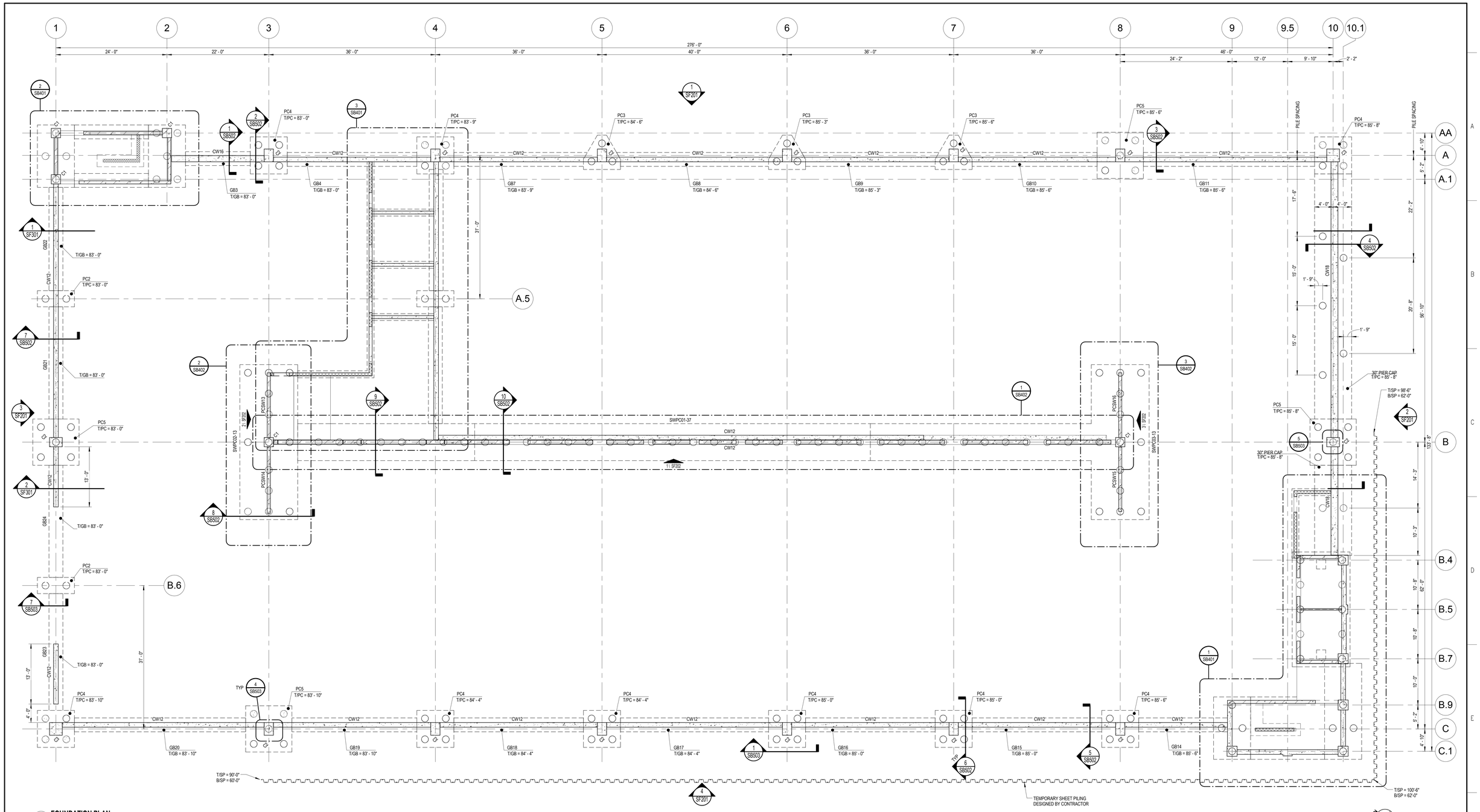

1 SB101 FOUNDATION PLAN

SCALE: 1/8" = 1'-0"

NOTES:

1. FINISH FLOOR ELEVATION VARIES. REFERENCE ELEVATION IS LEVEL 1 SOUTHWEST STAIR FINISH FLOOR ELEVATION (FIN FLR) = 100'-0". ELEVATION 100'-0" = USGS 642.08 FEET.
2. SEE SI001 FOR ABBREVIATIONS, SYMBOLS & LEGENDS
3. SEE SI002 FOR STRUCTURAL DESIGN LOAD INFORMATION
4. SEE SI003 FOR GENERAL STRUCTURAL NOTES
5. REFERENCE ARCHITECTURAL DRAWINGS FOR LOCATIONS AND SIZES OF DOOR OPENINGS, STAIRS, DOWNSPOUTS RECESSES, ETC.
6. SEE PLUMBING DRAWINGS FOR LOCATION OF DOWNSPOUTS.
7. SEE PLAN FOR TOP OF PILE-CAP ELEVATIONS.
8. SEE PLAN FOR TOP OF GRADE-BEAM & TRENCH-FOOTING ELEVATIONS.
9. PROVIDE A 1" GAP BETWEEN ALL CAST-IN-PLACE FOUNDATION WALLS AND PRECAST COLUMNS, UNLESS NOTED OTHERWISE.
10. SEE AIV SHEETS FOR WATERPROOFING AND JOINT DETAILS.
11. SEE SB601 FOR PILE CAP SCHEDULE.
12. SEE SB611 FOR GRADE BEAM, TRENCH FOOTING, CMU WALL AND CONCRETE WALL SCHEDULES.
13. TEMPORARY SHEET PILING TO BE CUT-OFF AT LEAST 1'-0" BELOW FINAL GRADE AND LEFT IN PLACE OR REMOVED COMPLETELY - CONTRACTOR'S OPTION.
14. PROVIDE WALL BRACING UNTIL ALL SLABS ON GRADE ARE IN PLACE FOR WALLS ALONG GRIDS A, B & C BETWEEN GRIDS 4 & 10 AND ALONG GRID 4.

COLUMN SCHEDULE

Type Mark	SIZE	REMARKS
C1	24"X24"	
C2	33"X24"	
C3	33"X33"	

Revisions: Date

VA U.S. Department of Veterans Affairs

VAMC MILWAUKEE
5000 W. National Ave. Milwaukee, WI 53295

MARK A. VANDERPOOL REGISTERED NO. 10809552 STATE OF INDIANA PROFESSIONAL ENGINEER

ARCHITECT/ENGINEERS:

PROJECT LEAD
Architect, Structural Engineer, Civil Engineer
GUIDON DESIGN
905 N. CAPITOL AVE. SUITE 100 INDIANAPOLIS, IN. 46204
317.800.6388 WWW.GUIDONDESIGN.COM
SUSTAINABLE ARCHITECTURE + ENGINEERING

MEP Engineer
APOGEE CONSULTING GROUP
7330 Chapel Hill Road, Suite 202
Raleigh, NC 27607
Tele: 757-663-8513

Functional Design
CARL WALKER INC.
11920 S. Highland Ave. Suite 2107
Lombard, IL 60148
Tele: 630-307-3800

BID SET

Drawing Title: FOUNDATION PLAN	Project Title: PARKING STRUCTURE LOT 7	Project Number: 14.1020.02	OFFICE OF FACILITIES MANAGEMENT
		Building Number: #152	
Approved for Design Concept: FACILITY MANAGEMENT DIVISION MANAGER	Location: CLEMENT J ZABLOCKI VAMC	Drawing Number: SB101	VA Project Number: 695-324
	Date: 1 DEC 2015 / Checked By: MAV / Drawn By: WJT		VA U.S. Department of Veterans Affairs

C:\Users\bthomas\Documents\14.1020.02-S-MVA-Garage_WJ.Thomas.rvt

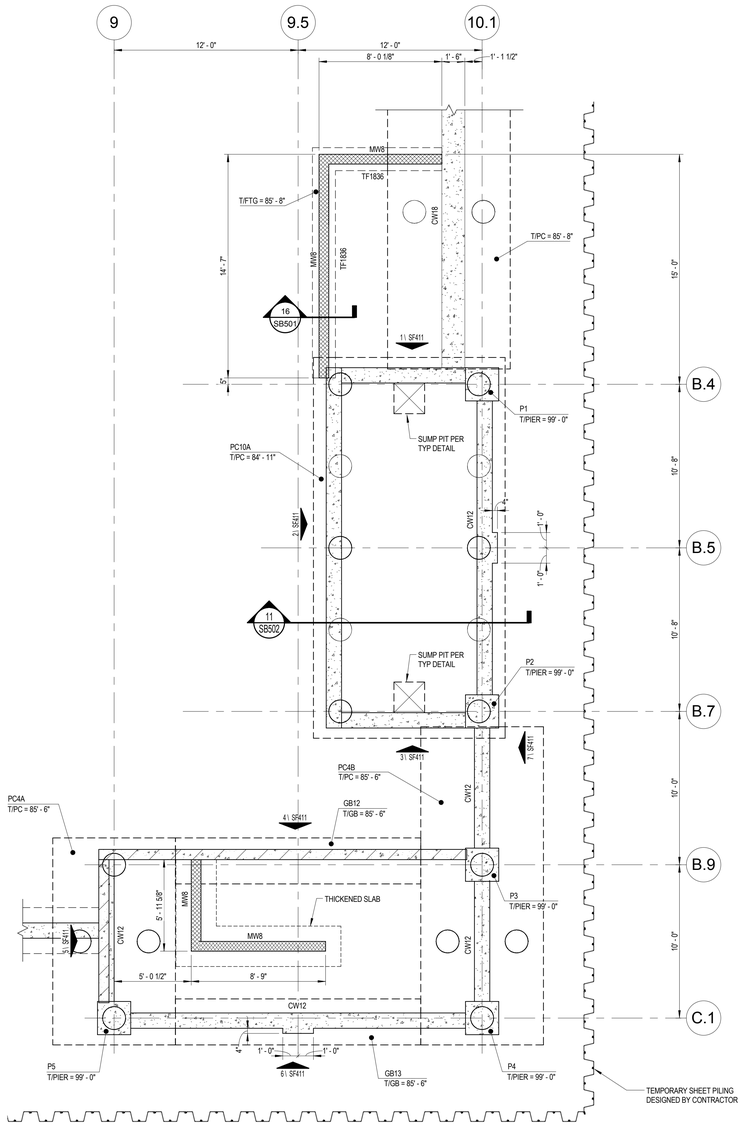

1 SB401 STAIR #1 ENLARGED PLAN @ FOUNDATION LEVEL
SCALE: 1/4" = 1'-0"

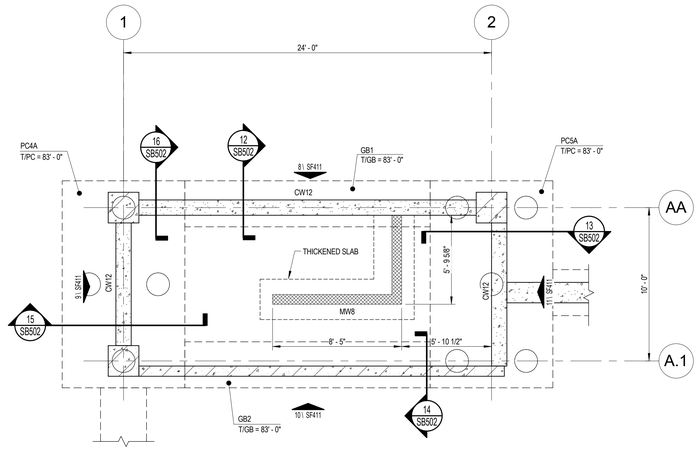

2 SB401 STAIR #2 ENLARGED PLAN @ FOUNDATION LEVEL
SCALE: 1/4" = 1'-0"

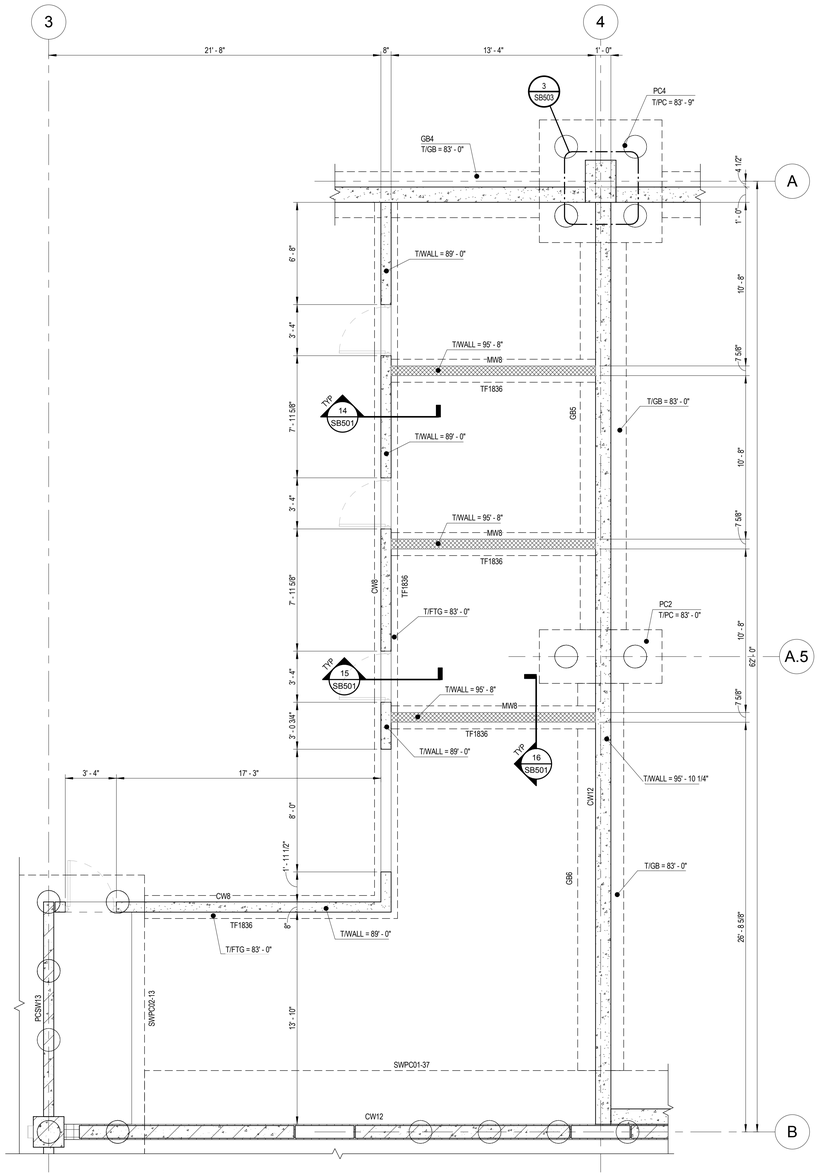

3 SB401 STORAGE AREA ENLARGED PLAN @ FOUNDATION LEVEL
SCALE: 1/4" = 1'-0"

Revisions:	Date

VA U.S. Department of Veterans Affairs

VAMC MILWAUKEE
5000 W. National Ave. Milwaukee, WI 53295

MARK A. VANDERWALDE REGISTERED NO. 10809552 STATE OF INDIANA PROFESSIONAL ENGINEER

ARCHITECT/ENGINEERS:

PROJECT LEAD
Architect, Structural Engineer, Civil Engineer
GUIDON DESIGN
905 N. CAPITOL AVE. SUITE 100 INDIANAPOLIS, IN. 46204
317.800.6388 WWW.GUIDONDESIGN.COM
SUSTAINABLE ARCHITECTURE + ENGINEERING

MEP Engineer
APOGEE CONSULTING GROUP
7330 Chapel Hill Road, Suite 202
Raleigh, NC 27607
Tele: 757-663-8513

Functional Design
CARL WALKER INC.
11920 S. Highland Ave. Suite 2107
Lombard, IL 60148
Tele: 630-307-3800

BID SET

Drawing Title	Project Title	Project Number	
ENLARGED PARTIAL FOUNDATION PLANS	PARKING STRUCTURE LOT 7	14.1020.02	OFFICE OF FACILITIES MANAGEMENT
		Building Number #152	
Approved for Design Concept: FACILITY MANAGEMENT DIVISION MANAGER	Location CLEMENT J ZABLOCKI VAMC	Drawing Number SB401	VA Project Number 695-324
	Date 1 DEC 2015 / Checked By: MAV / Drawn By: WJT		VA U.S. Department of Veterans Affairs

C:\Users\bthomas\Documents\14.1020.02-S-MVA-Garage_WJThomas.rvt

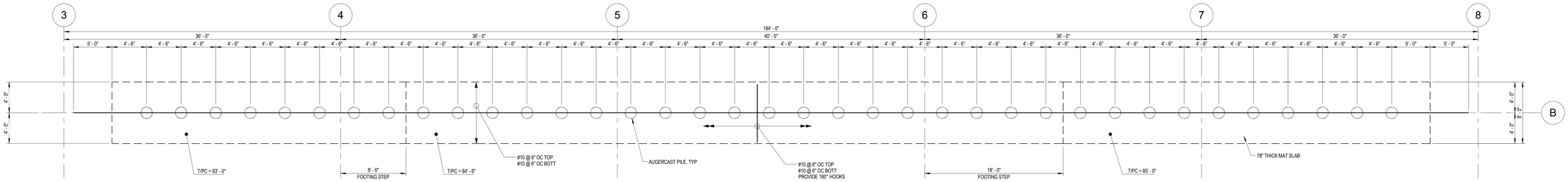

1 SB402 **SWPC01 ENLARGED FOUNDATION PLAN**
SCALE: 3/16" = 1'-0"

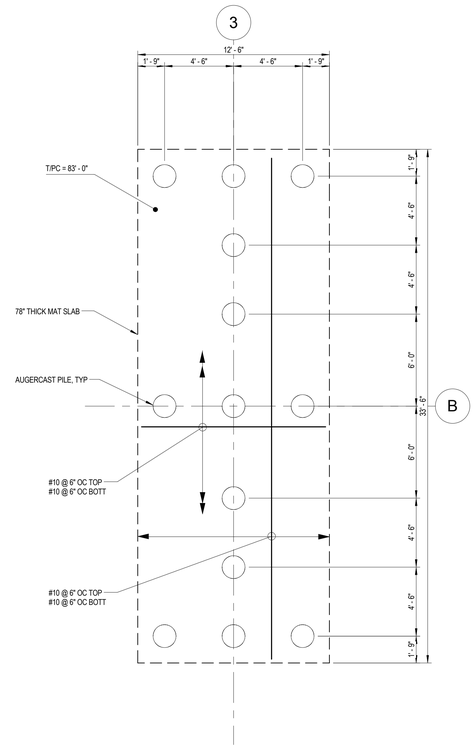

2 SB402 **SWPC02 ENLARGED FOUNDATION PLAN**
SCALE: 1/4" = 1'-0"

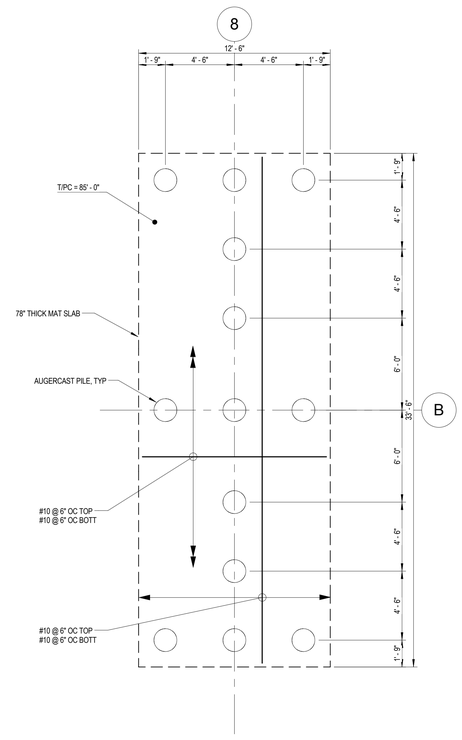

3 SB402 **SWPC03 ENLARGED FOUNDATION PLAN**
SCALE: 1/4" = 1'-0"

Revisions:	Date

VA | U.S. Department of Veterans Affairs

VAMC MILWAUKEE
5000 W. National Ave. Milwaukee, WI 53295

MARK A. VANDERPOOL REGISTERED NO. 10809552 STATE OF INDIANA PROFESSIONAL ENGINEER

ARCHITECT/ENGINEERS:

PROJECT LEAD
Architect, Structural Engineer, Civil Engineer
GUIDON DESIGN
905 N. CAPITOL AVE. SUITE 100 INDIANAPOLIS, IN. 46204
317.800.6388 WWW.GUIDONDESIGN.COM
SUSTAINABLE ARCHITECTURE + ENGINEERING

MEP Engineer
APOGEE CONSULTING GROUP
7330 Chapel Hill Road, Suite 202
Raleigh, NC 27607
Tele: 757-663-8513

Functional Design
CARL WALKER INC.
11920 S. Highland Ave. Suite 2107
Lombard, IL 60148
Tele: 630-307-3800

BID SET

Drawing Title	Project Title	Project Number	
ENLARGED SHEARWALL PILE CAP PLANS	PARKING STRUCTURE LOT 7	14.1020.02	OFFICE OF FACILITIES MANAGEMENT
		Building Number #152	
Approved for Design Concept: FACILITY MANAGEMENT DIVISION MANAGER	Location CLEMENT J ZABLOCKI VAMC	Drawing Number SB402	VA Project Number 695-324
	Date 1 DEC 2015 / Checked By: MAV / Drawn By: WJT		VA U.S. Department of Veterans Affairs

C:\Users\bthomas\Documents\14.1020.02-S-MVA-Garage_WJThomas.rvt

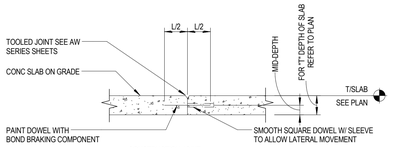

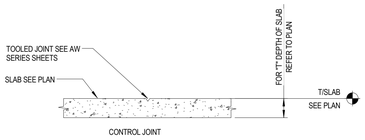

DOWEL SIZE AND SPACING			
SLAB DEPTH (T)	DOWEL DIAMETER	TOTAL DOWEL LENGTH (L)	DOWEL SPACING CENTER TO CENTER
IN	IN	IN	IN
4	3/4	16	24
5-6	3/4	16	12
7-8	1	18	12
9-11	1 1/4	18	12

1 SB501 **TYPICAL SLAB ON GRADE JOINTS**
SCALE: 3/4" = 1'-0"

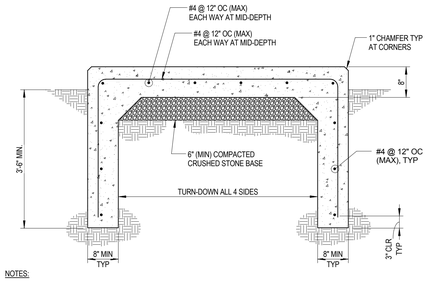

NOTES:

1. CONCRETE 28-DAY COMPRESSIVE STRENGTH = 4000 PSI, MINIMUM.
   AIR ENTRAINMENT = 6% +/- 1%
   MAX W/C RATIO = 0.45
   BROOM FINISH SURFACE
2. PROVIDE SAW-CUT CONTROL JOINTS SPACED NOT MORE THAN 24 TIMES THE SLAB THICKNESS CENTER-TO-CENTER, UNO. SEAL JOINTS WITH WEATHER-RESISTANT SEALANT.
3. SEE PLANS FOR OVERALL PAD DIMENSION.
4. COORDINATE EXACT LOCATION WITH CIVIL AND MECHANICAL DRAWINGS, AND EQUIPMENT SUPPLIER.

2 SB501 **EXTERIOR EQUIPMENT PAD DETAIL**
SCALE: 3/4" = 1'-0"

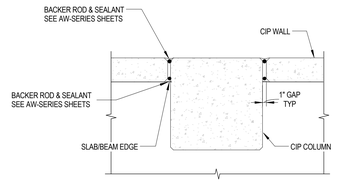

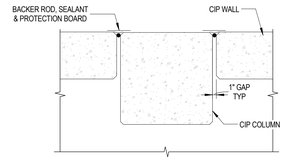

3 SB501 **COLUMN / WALL JOINT DETAIL**
SCALE: 3/4" = 1'-0"

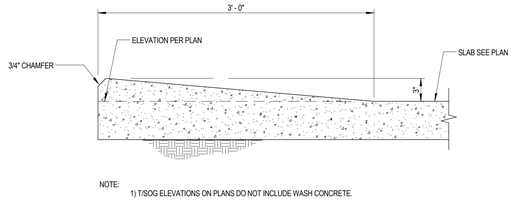

NOTE:
1) T/SOG ELEVATIONS ON PLANS DO NOT INCLUDE WASH CONCRETE.

4 SB501 **TYPICAL (SOG) WASH DETAIL**
SCALE: 1 1/2" = 1'-0"

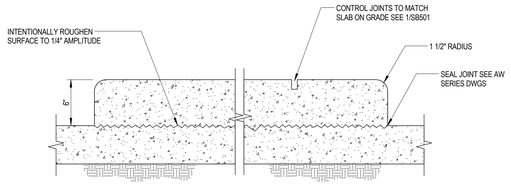

5 SB501 **TYPICAL ISLAND DETAIL**
SCALE: 1 1/2" = 1'-0"

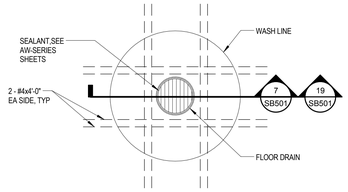

6 SB501 **FLOOR DRAIN DETAIL**
SCALE: 3/4" = 1'-0"

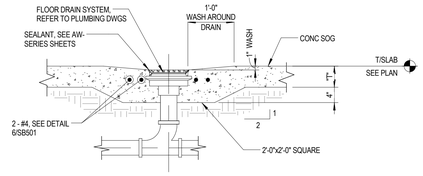

7 SB501 **FLOOR DRAIN DETAIL**
SCALE: 3/4" = 1'-0"

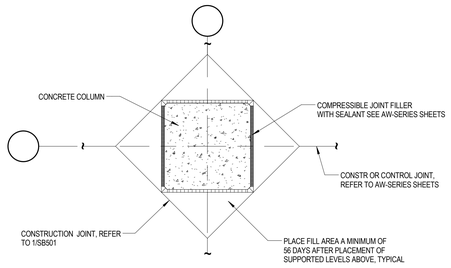

8 SB501 **COLUMN ISOLATION DETAIL**
SCALE: 3/4" = 1'-0"

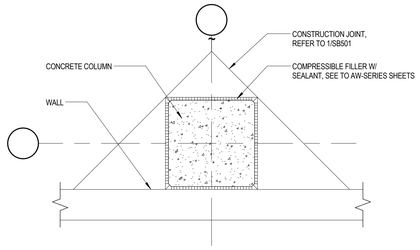

9 SB501 **COLUMN ISOLATION DETAIL**
SCALE: 3/4" = 1'-0"

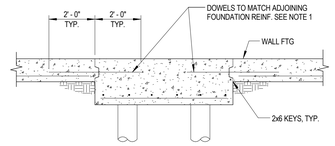

NOTE:
SEE 1/SB503, 2/SB611, 3/SB611 AND 4/SB611 FOR GRADE BEAM/PIER CAP INTERSECTION INFORMATION.

10 SB501 **TYPICAL FOUNDATION INTERSECTION**
SCALE: 3/8" = 1'-0"

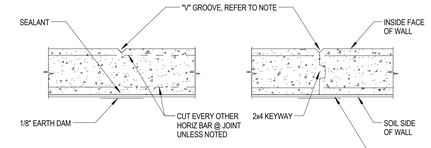

NOTE: FOR 8" WALL, PROVIDE 1" "V" GROOVE EACH SIDE OF WALL. FOR 10" OR LARGER WALL, PROVIDE 1" "V" GROOVE AT INSIDE FACE OF WALL AND 1 1/2" "V" GROOVE AT SOIL SIDE OF WALL

CONTROL JOINT CONSTRUCTION JOINT

11 SB501 **CONCRETE WALL DETAIL**
SCALE: 3/4" = 1'-0"

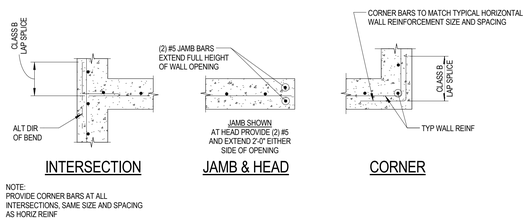

NOTE:
PROVIDE CORNER BARS AT ALL INTERSECTIONS, SAME SIZE AND SPACING AS HORIZ REINF

12 SB501 **CORNER BAR DETAILS**
SCALE: 3/4" = 1'-0"

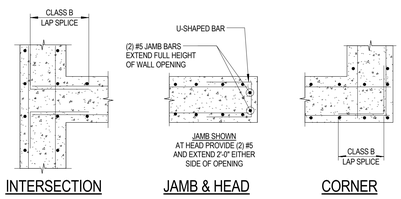

NOTE:
PROVIDE CORNER BARS AT ALL INTERSECTIONS, SAME SIZE AND SPACING AS HORIZ REINF

13 SB501 **CORNER BAR DETAILS**
SCALE: 3/4" = 1'-0"

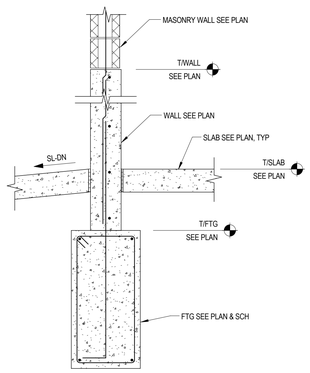

14 SB501 **SECTION**
SCALE: 3/4" = 1'-0"

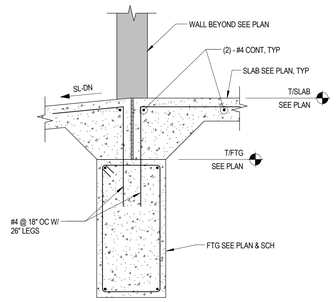

15 SB501 **SECTION**
SCALE: 3/4" = 1'-0"

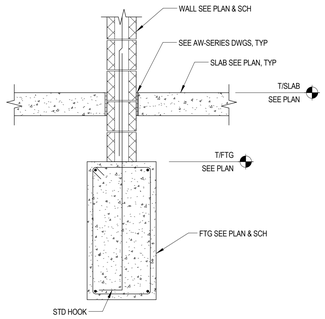

16 SB501 **SECTION**
SCALE: 3/4" = 1'-0"

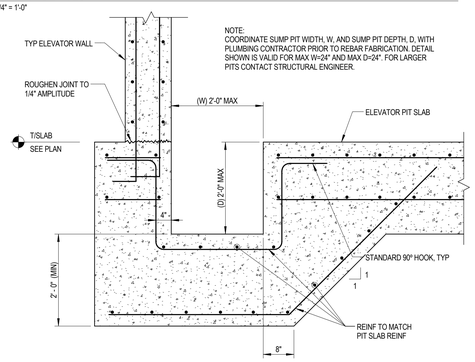

NOTE:
COORDINATE SUMP PIT WIDTH, W, AND SUMP PIT DEPTH, D, WITH PLUMBING CONTRACTOR PRIOR TO REBAR FABRICATION. DETAIL SHOWN IS VALID FOR MAX W=24" AND MAX D=24". FOR LARGER PITS CONTACT STRUCTURAL ENGINEER.

17 SB501 **TYPICAL SUMP PIT AT ELEVATOR PIT**
SCALE: 3/4" = 1'-0"

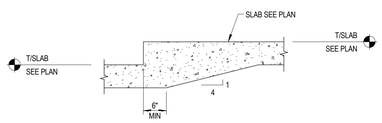

18 SB501 **TYPICAL SLAB ELEVATION CHANGE**
SCALE: 3/4" = 1'-0"

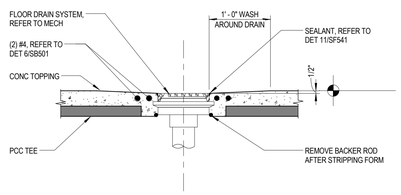

19 SB501 **FLOOR DRAIN DETAIL**
SCALE: 1" = 1'-0"

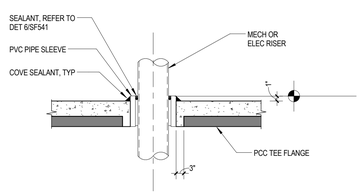

20 SB501 **SLAB SLEEVE DETAIL**
SCALE: 1" = 1'-0"

Revisions:	Date

VA | U.S. Department of Veterans Affairs

VAMC MILWAUKEE
5000 W. National Ave. Milwaukee, WI 53295

MARK A. VANDERPLOEG REGISTERED NO. 10809552 STATE OF INDIANA PROFESSIONAL ENGINEER

ARCHITECT/ENGINEERS:

PROJECT LEAD
Architect, Structural Engineer, Civil Engineer
GUIDON DESIGN
905 N. CAPITOL AVE. SUITE 100 INDIANAPOLIS, IN. 46204
317.800.6388 WWW.GUIDONDESIGN.COM
SUSTAINABLE ARCHITECTURE + ENGINEERING

MEP Engineer
APOGEE CONSULTING GROUP
7330 Chapel Hill Road, Suite 202
Raleigh, NC 27607
Tele: 757-663-8513

Functional Design
CARL WALKER INC.
11920 S. Highland Ave. Suite 2107
Lombard, IL 60148
Tele: 630-307-3800

BID SET

Drawing Title	Project Title	Project Number	OFFICE OF FACILITIES MANAGEMENT
TYPICAL FOUNDATION DETAILS	PARKING STRUCTURE LOT 7	14.1020.02	
		Building Number #152	
Approved for Design Concept: FACILITY MANAGEMENT DIVISION MANAGER	Location CLEMENT J ZABLOCKI VAMC	Drawing Number SB501	VA Project Number 695-324
	Date 1 DEC 2015 / Checked By: MAV / Drawn By: WJT		VA U.S. Department of Veterans Affairs

C:\Users\bthomas\Documents\14.1020.02-S-MVA-Garage_WJTthomas.rvt

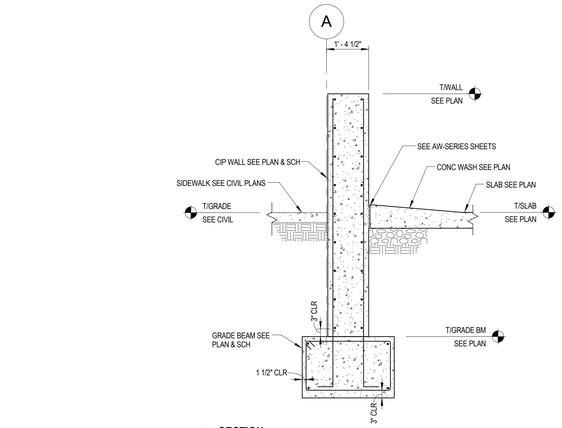

1 SB502 **SECTION** SCALE: 1/2" = 1'-0"

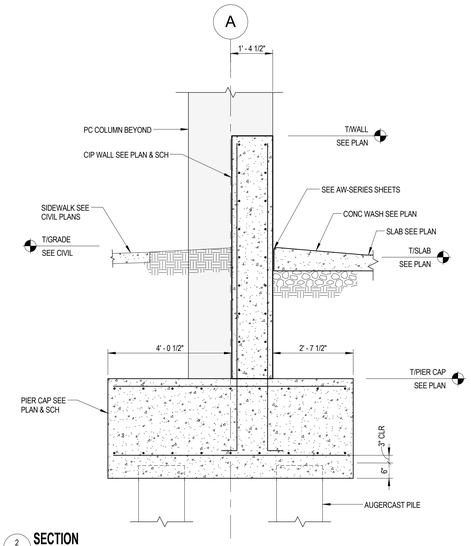

2 SB502 **SECTION** SCALE: 1/2" = 1'-0"

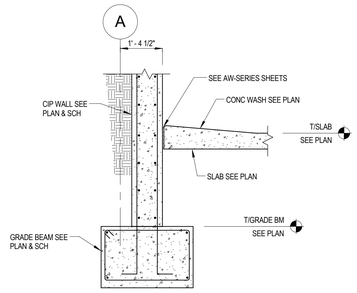

3 SB502 **SECTION** SCALE: 1/2" = 1'-0"

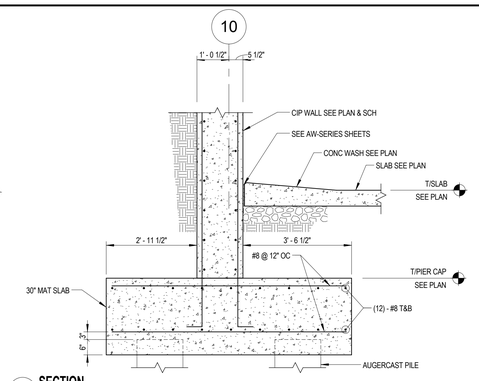

4 SB502 **SECTION** SCALE: 1/2" = 1'-0"

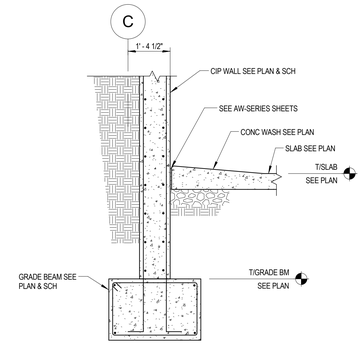

5 SB502 **SECTION** SCALE: 1/2" = 1'-0"

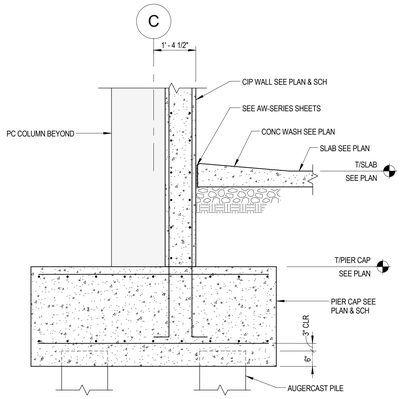

6 SB502 **SECTION** SCALE: 1/2" = 1'-0"

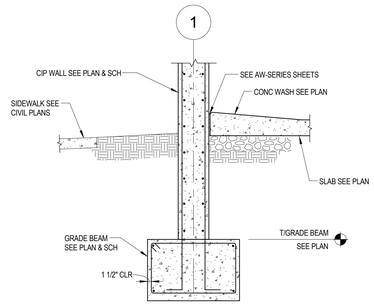

7 SB502 **SECTION** SCALE: 1/2" = 1'-0"

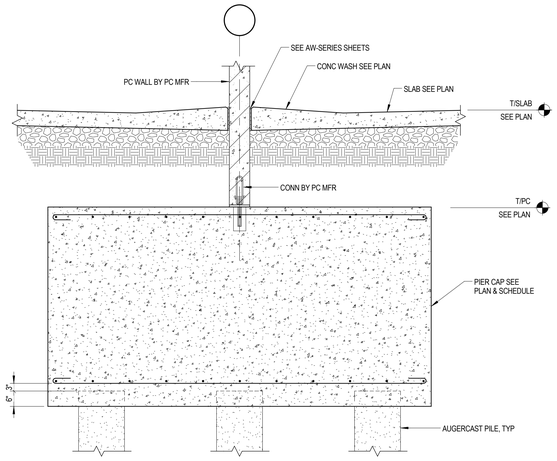

8 SB502 **SECTION** SCALE: 1/2" = 1'-0"

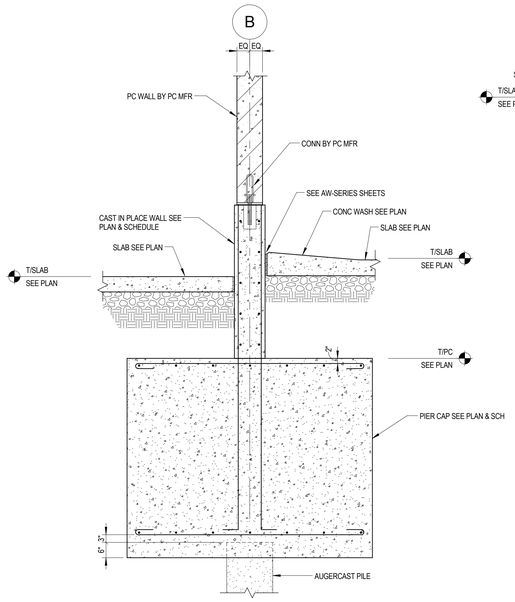

9 SB502 **SECTION** SCALE: 1/2" = 1'-0"

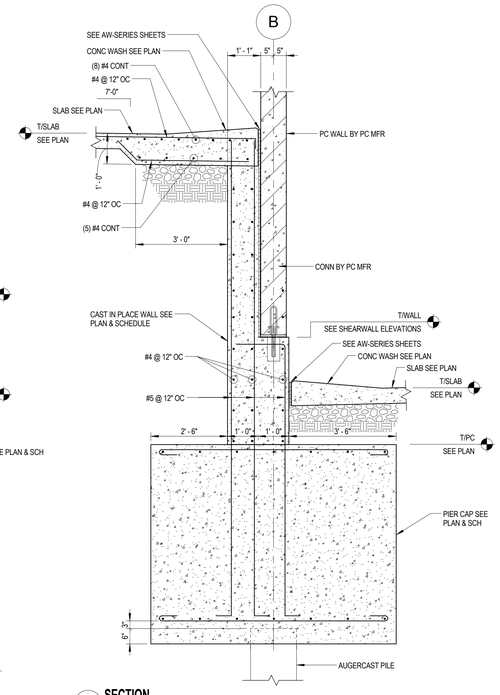

10 SB502 **SECTION** SCALE: 1/2" = 1'-0"

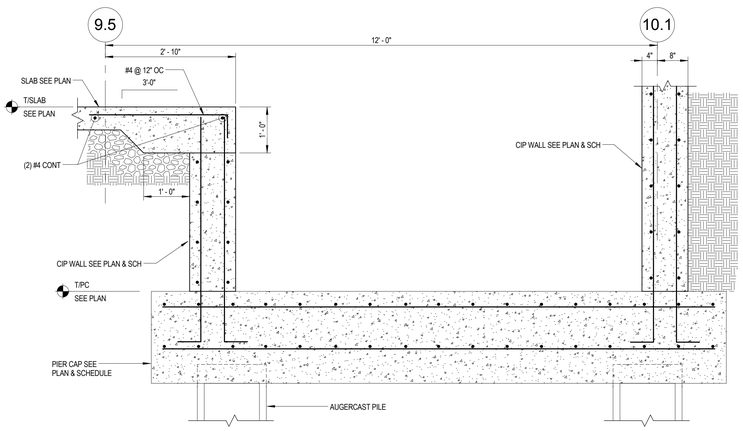

11 SB502 **SECTION** SCALE: 3/4" = 1'-0"

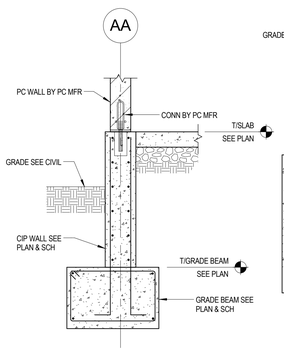

12 SB502 **SECTION** SCALE: 1/2" = 1'-0"

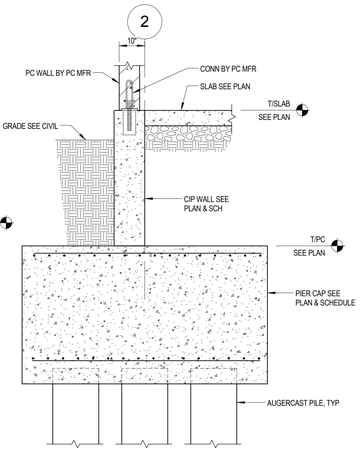

13 SB502 **SECTION** SCALE: 1/2" = 1'-0"

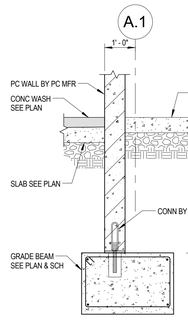

14 SB502 **SECTION** SCALE: 1/2" = 1'-0"

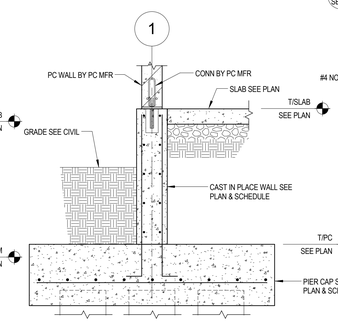

15 SB502 **SECTION** SCALE: 1/2" = 1'-0"

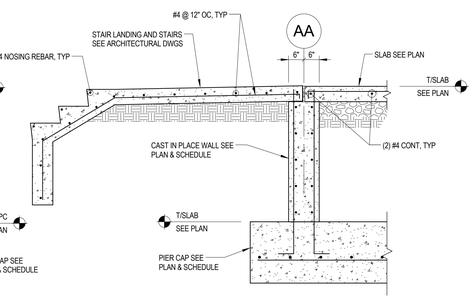

NOTE: SEE DETAIL 2/SB501 FOR ADDITIONAL INFORMATION FOR TURNDOWN AT 3 SIDES

16 SB502 **SECTION** SCALE: 1/2" = 1'-0"

Revisions:	Date

VA | U.S. Department of Veterans Affairs

VAMC MILWAUKEE
5000 W. National Ave. Milwaukee, WI 53295

MARK A. VANDERPLOEG REGISTERED NO. 10809552 STATE OF INDIANA PROFESSIONAL ENGINEER

ARCHITECT/ENGINEERS:

PROJECT LEAD
Architect, Structural Engineer, Civil Engineer
GUIDON DESIGN
905 N. CAPITOL AVE. SUITE 100 INDIANAPOLIS, IN 46204
317.800.6388 WWW.GUIDONDESIGN.COM
SUSTAINABLE ARCHITECTURE + ENGINEERING

MEP Engineer
APOGEE CONSULTING GROUP
7330 Chapel Hill Road, Suite 202
Raleigh, NC 27607
Tele: 757-663-8513

Functional Design
CARL WALKER INC.
11920 S. Highland Ave. Suite 2107
Lombard, IL 60148
Tele: 630-307-3800

BID SET

Drawing Title: FOUNDATION SECTIONS AND DETAILS	Project Title: PARKING STRUCTURE LOT 7	Project Number: 14.1020.02	OFFICE OF FACILITIES MANAGEMENT
		Building Number: #152	
Approved for Design Concept: FACILITY MANAGEMENT DIVISION MANAGER	Location: CLEMENT J ZABLOCKI VAMC	Drawing Number: SB502	VA Project Number: 695-324
	Date: 1 DEC 2015 / Checked By: MAV / Drawn By: WJT		VA | U.S. Department of Veterans Affairs

C:\Users\bthomas\Documents\14.1020.02-S-MVA-Garage_WJ.Thomas.rvt

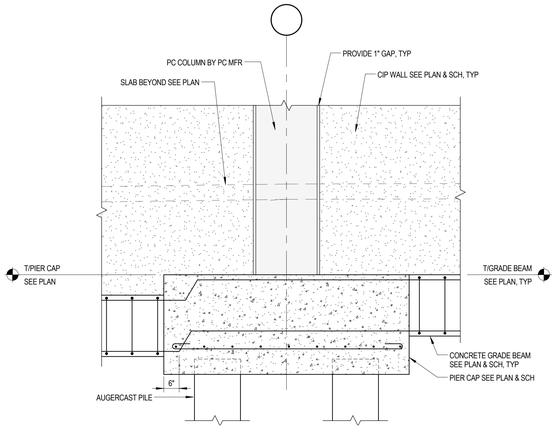

1 SB503 **SECTION**
SCALE: 1/2" = 1'-0"

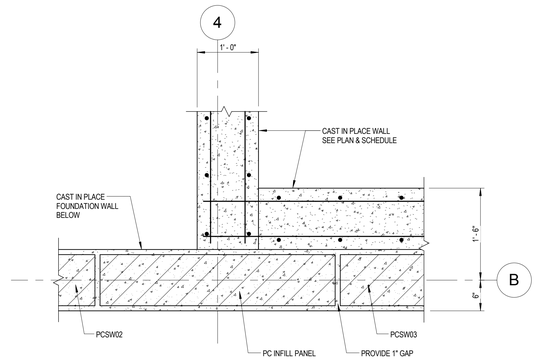

2 SB503 **DETAIL**
SCALE: 1" = 1'-0"

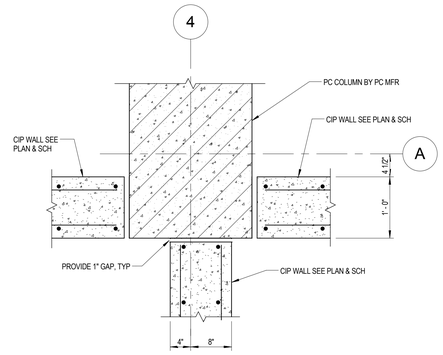

3 SB503 **COLUMN TO WALL CONN DETAIL**
SCALE: 1" = 1'-0"

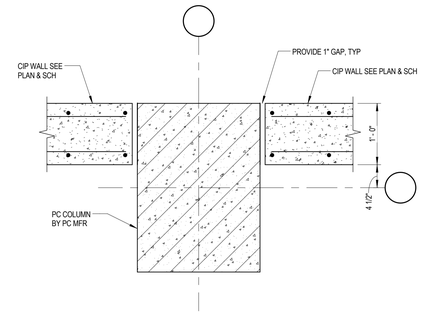

4 SB503 **COLUMN TO WALL CONN DETAIL**
SCALE: 1" = 1'-0"

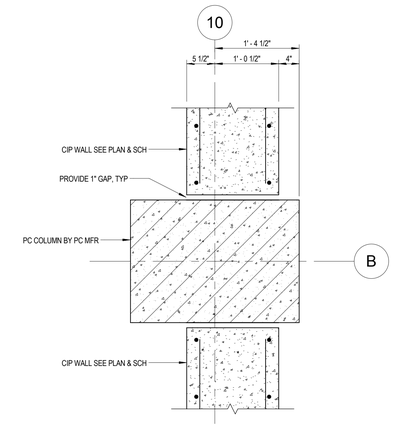

5 SB503 **COLUMN TO WALL CONN DETAIL**
SCALE: 1" = 1'-0"

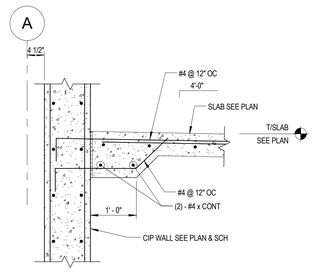

6 SB503 **SECTION**
SCALE: 3/4" = 1'-0"

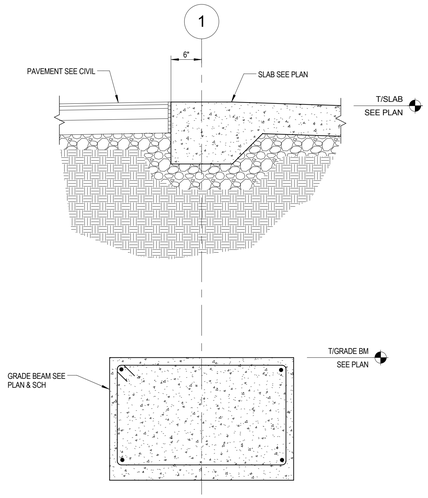

7 SB503 **SECTION**
SCALE: 1" = 1'-0"

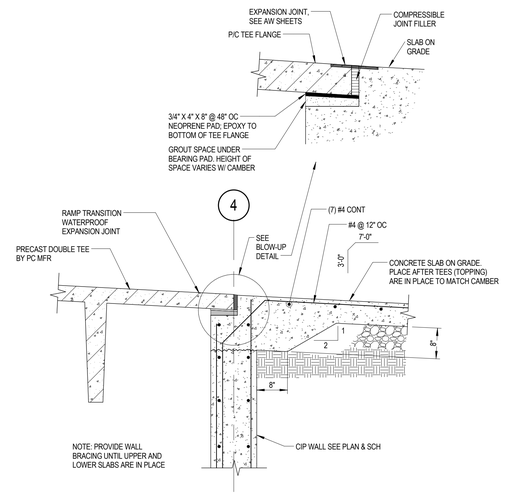

8 SB503 **SECTION**
SCALE: 3/4" = 1'-0"

Revisions:	Date

VA | U.S. Department of Veterans Affairs

VAMC MILWAUKEE
5000 W. National Ave. Milwaukee, WI 53295

MARK A. VANDERPOOL REGISTERED NO. 10809552 STATE OF INDIANA PROFESSIONAL ENGINEER

ARCHITECT/ENGINEERS:

PROJECT LEAD
Architect, Structural Engineer, Civil Engineer
GUIDON DESIGN
905 N. CAPITOL AVE. SUITE 100 INDIANAPOLIS, IN. 46204
317.800.6388 WWW.GUIDONDESIGN.COM
SUSTAINABLE ARCHITECTURE + ENGINEERING

MEP Engineer
APOGEE CONSULTING GROUP
7330 Chapel Hill Road, Suite 202
Raleigh, NC 27607
Tele: 757-663-8513

Functional Design
CARL WALKER INC.
11920 S. Highland Ave. Suite 2107
Lombard, IL 60148
Tele: 630-307-3800

BID SET

Drawing Title: FOUNDATION SECTIONS AND DETAILS	Project Title: PARKING STRUCTURE LOT 7	Project Number: 14.1020.02	OFFICE OF FACILITIES MANAGEMENT
		Building Number: #152	
Approved for Design Concept: FACILITY MANAGEMENT DIVISION MANAGER	Location: CLEMENT J ZABLOCKI VAMC	Drawing Number: SB503	VA Project Number: 695-324
	Date: 1 DEC 2015 / Checked By: MAV / Drawn By: WJT		VA | U.S. Department of Veterans Affairs

C:\Users\bthomas\Documents\14.1020.02-S-MVA-Garage_WJThomas.rvt

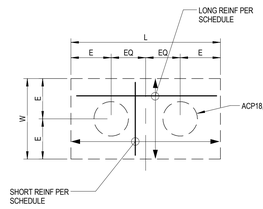

PC2

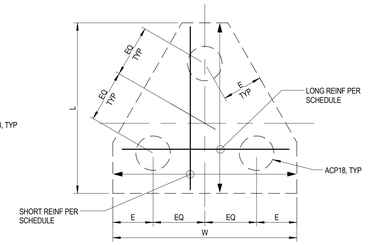

PC3

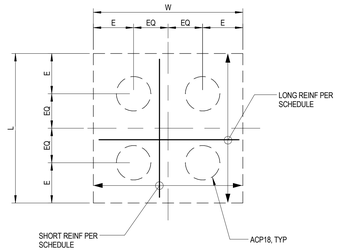

PC4

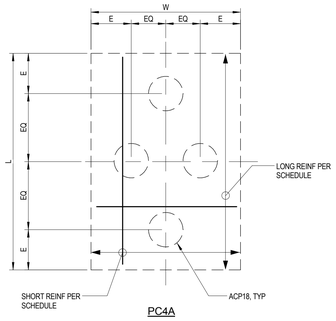

PC4A

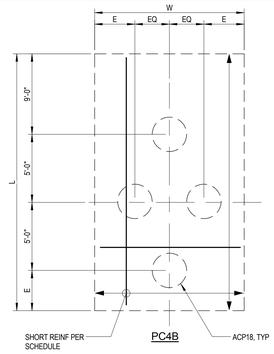

PC4B

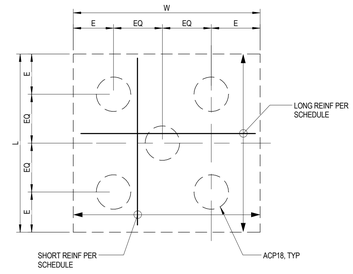

PC5 & PC5A

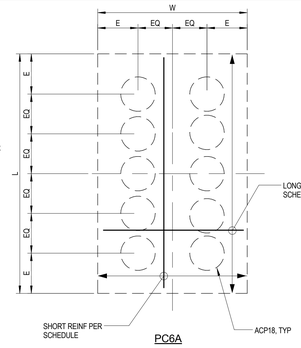

PC6A

1 TYPICAL PILE CAP DETAILS
SB601 NOT TO SCALE

PILE CAP SCHEDULE

MARK	NO. OF PILES	PILE	CAP DIM				CAP BOTT REINF				REMARKS
			THK	L	W	E	LONG		SHORT		
							QTY	SIZE	QTY	SIZE	
PC2	2	ACP18	2' - 9"	8' - 0"	3' - 6"	1' - 9"	3	#9	6	#9	1
PC3	3	ACP18	3' - 3"	8' - 0"	7' - 5"	1' - 9"	7	#9	7	#9	1
PC4	4	ACP18	3' - 3"	8' - 0"	8' - 0"	1' - 9"	7	#9	7	#9	1
PC4A	4	ACP18	2' - 0"	13' - 6"	8' - 0"	1' - 9"	16	#6	27	#6	TOP & BOTT, 1
PC4B	4	ACP18	2' - 0"	20' - 9"	8' - 0"	1' - 9"	16	#7	40	#7	TOP & BOTT, 1
PC5	5	ACP18	4' - 0"	10' - 0"	10' - 0"	1' - 9"	11	#9	11	#9	1
PC5A	5	ACP18	4' - 6"	13' - 6"	8' - 0"	1' - 9"	16	#10	27	#10	TOP & BOTT, 1
PC10A	10	ACP18	2' - 0"	24' - 10"	12' - 6"	1' - 9"	25	#6	50	#6	TOP & BOTT, 1

NOTES:

1. PROVIDE STANDARD HOOKS AT BOTH ENDS OF BARS.
2. ACP18 INDICATES 18" DIAMETER AUGERCAST PILE x 65'-0" LONG.

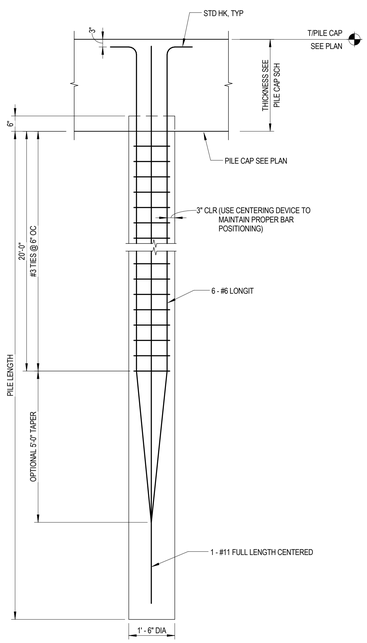

2 TYPICAL AUGER CAST PILE (ACP18)
SB601 SCALE: 1/2" = 1'-0"

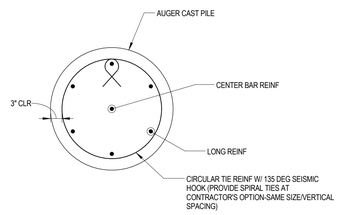

3 TYPICAL AUGER CAST PILE SECTION
SB601 SCALE: 3/4" = 1'-0"

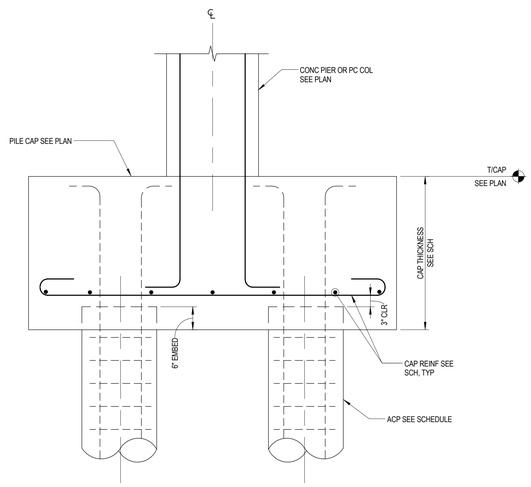

4 TYPICAL PILE CAP SECTION
SB601 SCALE: 3/4" = 1'-0"

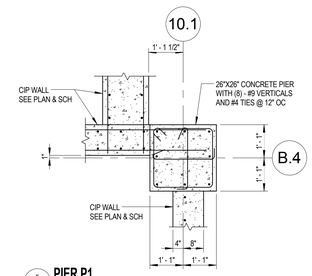

5 PIER P1
SB601 SCALE: 1/2" = 1'-0"

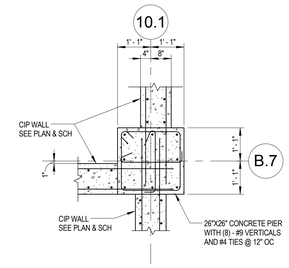

6 PIER P2
SB601 SCALE: 1/2" = 1'-0"

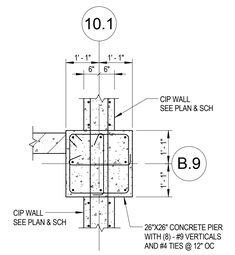

7 PIER P3
SB601 SCALE: 1/2" = 1'-0"

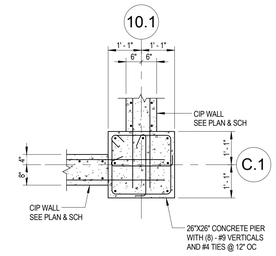

8 PIER P4
SB601 SCALE: 1/2" = 1'-0"

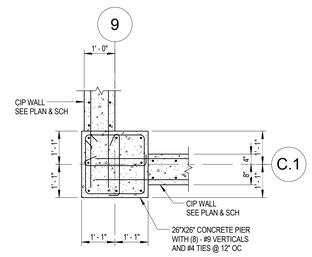

9 PIER P5
SB601 SCALE: 1/2" = 1'-0"

Revisions:	Date

VA U.S. Department of Veterans Affairs

VAMC MILWAUKEE
5000 W. National Ave. Milwaukee, WI 53295

MARK A. VANDERWOUDE REGISTERED NO. 10809552 STATE OF INDIANA PROFESSIONAL ENGINEER

ARCHITECT/ENGINEERS:

PROJECT LEAD
Architect, Structural Engineer, Civil Engineer
GUIDON DESIGN
905 N. CAPITOL AVE. SUITE 100 INDIANAPOLIS, IN. 46204
317.800.6388 WWW.GUIDONDESIGN.COM
SUSTAINABLE ARCHITECTURE + ENGINEERING

MEP Engineer
APOGEE CONSULTING GROUP
7330 Chapel Hill Road, Suite 202
Raleigh, NC 27607
Tele: 757-663-8513

Functional Design
CARL WALKER INC.
11920 S. Highland Ave. Suite 2107
Lombard, IL 60148
Tele: 630-307-3800

BID SET

Drawing Title: PILE/PILE CAP SCHEDULE, SECTIONS AND DETAILS	Project Title: PARKING STRUCTURE LOT 7	Project Number: 14.1020.02	OFFICE OF FACILITIES MANAGEMENT
		Building Number: #152	
Approved for Design Concept: FACILITY MANAGEMENT DIVISION MANAGER	Location: CLEMENT J ZABLOCKI VAMC	Drawing Number: SB601	VA Project Number: 695-324
	Date: 1 DEC 2015 / Checked By: MAV / Drawn By: WJT		VA U.S. Department of Veterans Affairs

C:\Users\bthomas\Documents\14.1020.02-S-MVA-Garage_WJ\Thomas.rvt

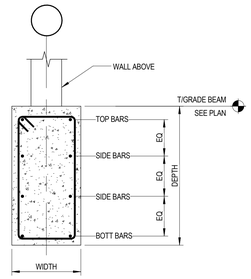

1 SB611 **REINF GRADE BEAM DETAIL**
SCALE: 3/4" = 1'-0"

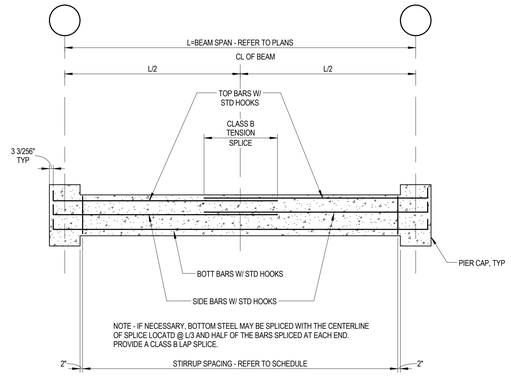

2 SB611 **REINF CONCRETE GRADE BEAM - TYPE I (ONE SPAN)**
SCALE: 1/4" = 1'-0"

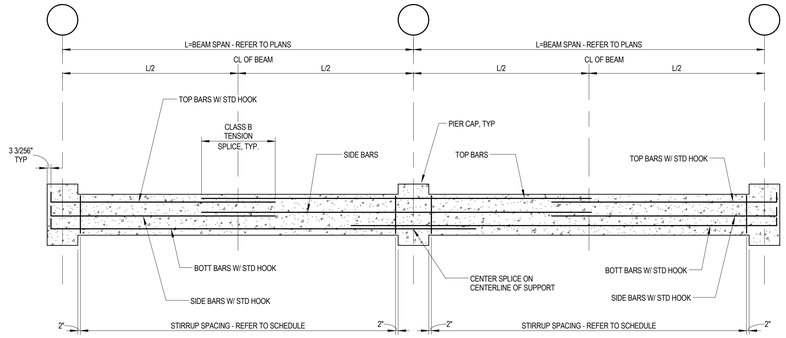

3 SB611 **REINF CONCRETE GRADE BEAM - TYPE II (CONT SPAN)**
SCALE: 1/4" = 1'-0"

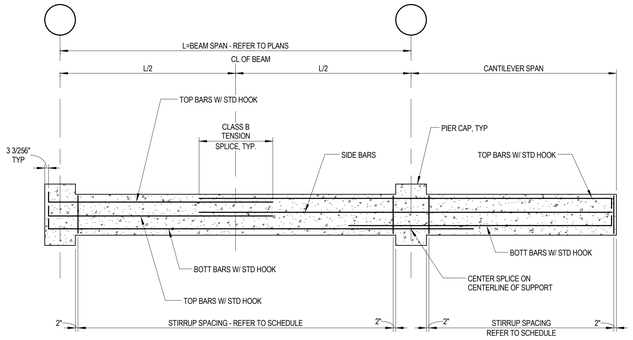

4 SB611 **REINF CONCRETE GRADE BEAM - TYPE III (CANTILEVER SPAN)**
SCALE: 1/4" = 1'-0"

CONCRETE GRADE BEAM SCHEDULE

MARK	WIDTH	DEPTH	SPAN TYPE	REINFORCEMENT: BOTTOM BARS NO. & SIZE	REINFORCEMENT: TOP BARS LEFT END NO. & SIZE	REINFORCEMENT: TOP BARS RIGHT END NO. & SIZE	STIRRUPS SIZE	STIRRUPS SPACING EACH END (UNO)	REMARKS
GB1	3' - 0"	2' - 0"	I	5 - #5	5 - #5	5 - #5	#4	10"	
GB2	3' - 0"	2' - 0"	I	5 - #5	5 - #5	5 - #5	#4	10"	
GB3	3' - 0"	2' - 0"	II	5 - #9	5 - #9	5 - #9	#4	10"	
GB4	3' - 0"	2' - 0"	II	5 - #9	5 - #9	5 - #9	#4	10"	
GB5	3' - 0"	2' - 0"	II	5 - #9	5 - #9	5 - #9	#4	10"	
GB6	3' - 0"	2' - 0"	II	5 - #9	5 - #9	5 - #9	#4	10"	
GB7	3' - 0"	2' - 0"	II	5 - #9	5 - #9	5 - #9	#4	10"	
GB8	3' - 0"	2' - 0"	II	5 - #9	5 - #9	5 - #9	#4	10"	
GB9	3' - 0"	2' - 0"	II	5 - #9	5 - #9	5 - #9	#4	10"	
GB10	3' - 0"	2' - 0"	II	5 - #9	5 - #9	9 - #9	#4	10"	
GB11	3' - 0"	2' - 0"	II	5 - #9	9 - #9	5 - #9	#4	10"	
GB12	3' - 0"	2' - 0"	I	5 - #5	5 - #5	5 - #5	#4	10"	
GB13	3' - 0"	2' - 0"	I	5 - #5	5 - #5	5 - #5	#4	10"	
GB14	3' - 0"	2' - 0"	II	5 - #9	5 - #9	5 - #9	#4	10"	
GB15	3' - 0"	2' - 0"	II	5 - #9	5 - #9	5 - #9	#4	10"	
GB16	3' - 0"	2' - 0"	II	5 - #9	5 - #9	5 - #9	#4	10"	
GB17	3' - 0"	2' - 0"	II	5 - #9	5 - #9	5 - #9	#4	10"	
GB18	3' - 0"	2' - 0"	II	5 - #9	5 - #9	5 - #9	#4	10"	
GB19	3' - 0"	2' - 0"	II	5 - #9	9 - #9	5 - #9	#4	10"	
GB20	3' - 0"	2' - 0"	II	5 - #9	5 - #9	9 - #9	#4	10"	
GB21	3' - 0"	2' - 0"	II	5 - #7	5 - #7	5 - #7	#4	10"	
GB22	3' - 0"	2' - 0"	II	5 - #7	5 - #7	5 - #7	#4	10"	
GB23	3' - 0"	2' - 0"	II	5 - #7	5 - #7	5 - #7	#4	10"	
GB24	3' - 0"	2' - 0"	II	5 - #7	5 - #7	5 - #7	#4	10"	

NOTES:

1. BEAM WIDTHS INDICATED ARE MINIMUMS. BEAMS MAY TAPER A MAXIMUM OF 1-1/2" ON EACH SIDE OF THE BEAM FROM THE BOTTOM OF THE BEAM TO THE UNDERSIDE OF THE SLAB.
2. GRADE BEAMS SHALL BE REINFORCED IN ACCORDANCE WITH DETAIL 1/SB611 AND THE SCHEDULE.
3. WHERE ONE BEAM FRAMES INTO ANOTHER, PROVIDE ADDITIONAL SHEAR REINFORCEMENT IN THE SUPPORTING MEMBER 3 @ 2", 3 @ 6", THEN AS DIRECTED IN THE BEAM SCHEDULE.
4. WHERE NOTED, BEAM HORIZONTAL REINFORCEMENT SHALL BE PLACED IN TWO LAYERS. SPACING BETWEEN LAYERS SHALL CONFORM TO ACI 318 SECTION 7.6.
5. NORTH-SOUTH GRADE BEAM REINFORCING SHALL GO UNDER EAST-WEST GRADE BEAM REINFORCING AT INTERSECTIONS.
6. FOR SPAN TYPE I - REFER TO DETAIL 2/SB611. FOR SPAN TYPE II - REFER TO DETAIL 3/SB611. FOR SPAN TYPE III - REFER TO DETAIL 4/SB611.
7. BEAM END REINFORCING TABULATED FOR TWO CONSECUTIVE BEAMS IS NOT ADDITIVE. LEFT END OF BEAMS IS NORTH FOR NORTH-SOUTH BEAMS AND WEST FOR EAST-WEST BEAMS.

TRENCH FOOTING SCHEDULE

MARK	FOOTING SIZE WIDTH	FOOTING SIZE DEPTH	FOOTING REINFORCEMENT	REMARKS
TF1836	1' - 6"	3' - 0"	3-#6	

CONCRETE WALL SCHEDULE

MARK	WALL THICKNESS	HORIZONTAL REINF INSIDE FACE	HORIZONTAL REINF OUTSIDE FACE	VERTICAL REINF INSIDE FACE	VERTICAL REINF OUTSIDE FACE	REMARKS
CW8	8"	#4 @ 12" OC	-	#4 @ 12" OC	-	
CW12	1' - 0"	#4 @ 12" OC	#4 @ 12" OC	#5 @ 12" OC	#5 @ 12" OC	#3 WALL STIRRUPS AT 4'-0" IN BOTH DIRECTIONS
CW16	1' - 4"	#4 @ 12" OC	#4 @ 12" OC	#4 @ 12" OC	#4 @ 12" OC	#3 WALL STIRRUPS AT 4'-0" IN BOTH DIRECTIONS
CW18	1' - 6"	#5 @ 12" OC	#5 @ 12" OC	#8 @ 12" OC	#8 @ 12" OC	#3 WALL STIRRUPS AT 4'-0" IN BOTH DIRECTIONS

CMU WALL SCHEDULE

MARK	CMU SIZE	TYPE	REINFORCEMENT	REMARKS
MW8	8"	A	#5 @ 32" OC	

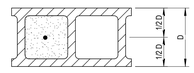

TYPE A

NOTES:

1. GROUT SOLID ALL CELLS CONTAINING REINFORCEMENT AND BELOW GRADE.
2. PROVIDE MATCHING HOOKED DOWELS INTO FOUNDATION FOR ALL VERTICAL REINFORCEMENT.
3. PROVIDE VERT. BAR AT ALL CORNERS, INTERSECTIONS, AND ENDS OF WALL. BAR SIZE TO MATCH TYP. VERT. REINFORCEMENT.
4. PROVIDE VERT. BARS AT JAMBS OF ALL OPENINGS.
   FOR OPENINGS W/ WIDTH ≤ 3'-4" PROVIDE VERT. BARS AT FIRST TWO CORES AT EACH JAMB.
   FOR OPENINGS W/ WIDTH > 3'-4" ≤ 8'-0" PROVIDE VERT. BARS AT FIRST THREE CORES AT EACH JAMB.
   BAR SIZE TO MATCH TYP. VERT. REINFORCEMENT.
5. PROVIDE VERT. BAR AT FIRST CORE ON EACH SIDE OF CONTROL JOINTS. BAR SIZE AND SPACING TO MATCH TYP. VERT. REINFORCEMENT.
6. PROVIDE HORIZONTAL BOND BEAM W/ 1-#5 CONT. BELOW ALL WINDOW AND DOOR OPENINGS. EXTEND 2'-0" PAST OPENING.
7. SPLICE ALL REINFORCEMENT PER TABLE THIS SHEET.

MASONRY CONSTRUCTION LAP SPLICE LENGTHS

#3	1'-6"
#4	2'-0"
#5	2'-6"
#6	3'-0"
#7	3'-6"
#8	4'-0"
#9	4'-6"

C:\Users\bthomas\Documents\14.1020.02-S-MVA-Garage_WJThomas.rvt

Revisions: Date

VA | U.S. Department of Veterans Affairs
VAMC MILWAUKEE
5000 W. National Ave. Milwaukee, WI 53295

MARK A. VANDERPOOL REGISTERED NO. 10809552 STATE OF INDIANA PROFESSIONAL ENGINEER

ARCHITECT/ENGINEERS:

PROJECT LEAD
Architect, Structural Engineer, Civil Engineer
GUIDON DESIGN
905 N. CAPITOL AVE. SUITE 100 INDIANAPOLIS, IN. 46204
317.800.6388 WWW.GUIDONDESIGN.COM
SUSTAINABLE ARCHITECTURE + ENGINEERING

MEP Engineer
APOGEE CONSULTING GROUP
7330 Chapel Hill Road, Suite 202
Raleigh, NC 27607
Tele: 757-663-8513

Functional Design
CARL WALKER INC.
11920 S. Highland Ave. Suite 2107
Lombard, IL 60148
Tele: 630-307-3800

BID SET

Drawing Title: GRADE BEAM, WALL FOOTING, CONCRETE WALL AND MASONRY WALL SCHEDULES AND DETAILS	Project Title: PARKING STRUCTURE LOT 7	Project Number: 14.1020.02	OFFICE OF FACILITIES MANAGEMENT
		Building Number: #152	
Approved for Design Concept: FACILITY MANAGEMENT DIVISION MANAGER	Location: CLEMENT J ZABLOCKI VAMC	Drawing Number: SB611	VA Project Number: 695-324
	Date: 1 DEC 2015 / Checked By: MAV / Drawn By: WJT		VA | U.S. Department of Veterans Affairs

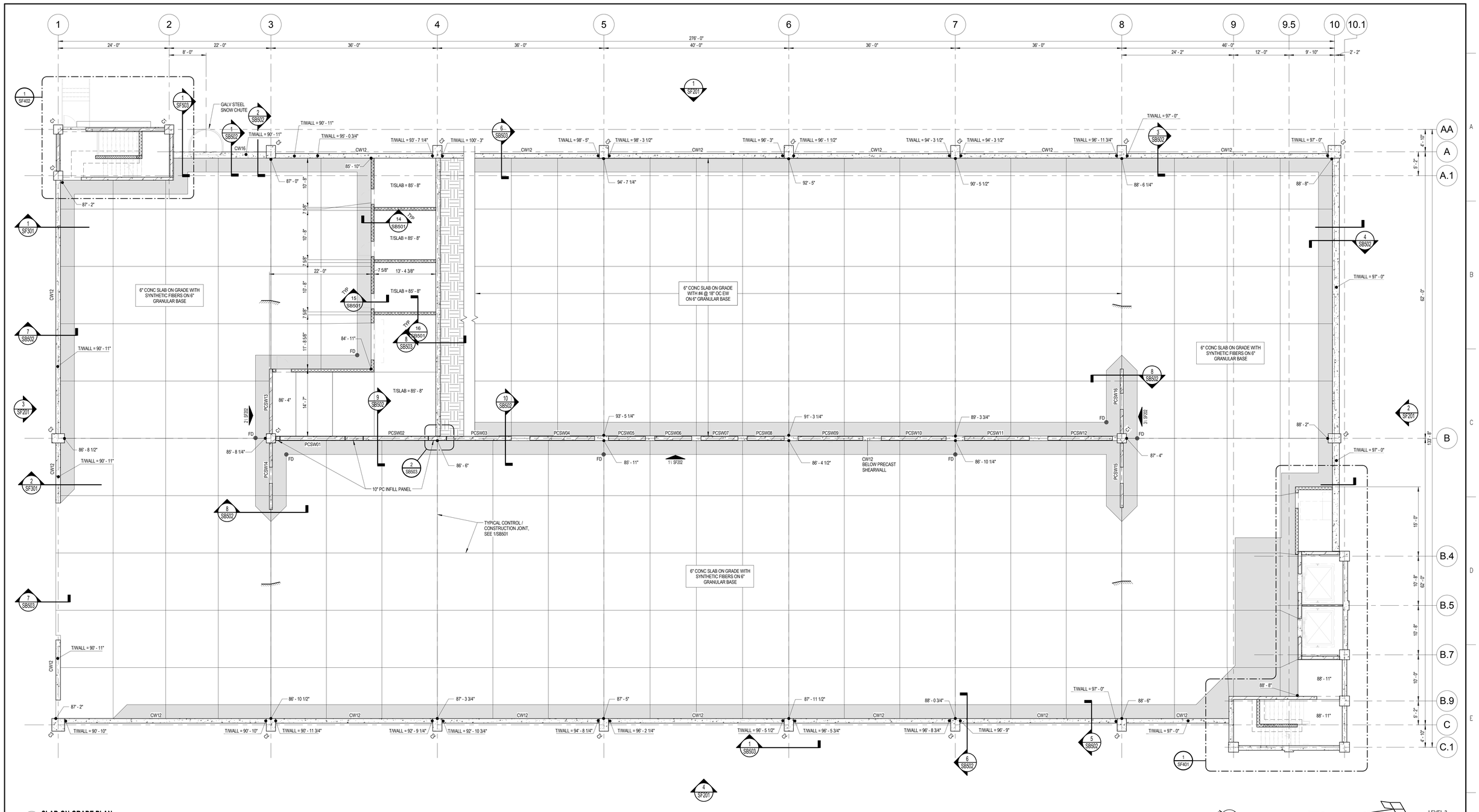

1 SF101 SLAB-ON-GRADE PLAN

SCALE: 1/8" = 1'-0"

NOTES:

1. FINISH FLOOR ELEVATION VARIES. REFERENCE ELEVATION IS LEVEL 1 SOUTHWEST STAIR FINISH FLOOR ELEVATION (F/IN FLR) = 100'-0". ELEVATION 100'-0" = USGS 642.08 FEET.
2. SEE SI001 FOR ABBREVIATIONS, SYMBOLS & LEGENDS
3. SEE SI002 FOR STRUCTURAL DESIGN LOAD INFORMATION
4. SEE SI003 FOR GENERAL STRUCTURAL NOTES
5. REFERENCE ARCHITECTURAL DRAWINGS FOR LOCATIONS AND SIZES OF DOOR OPENINGS, STAIRS, DOWNSPOUTS RECESSES, ETC.
6. SEE PLAN FOR SLAB SPOT ELEVATIONS. ELEVATIONS DO NOT INCLUDE CONCRETE WASH.
7. INDICATES LOCATION WHERE THE CONCRETE WASH EXISTS, SEE 4/SB501. SEE AW-SERIES SHEETS FOR DIMENSIONS AND DETAILS FOR CONCRETE WASHES.
8. SEE PLAN FOR SLAB ON GRADE CONSTRUCTION.
9. PROVIDE A 1" GAP BETWEEN ALL CAST-IN-PLACE FOUNDATION WALLS AND PRECAST COLUMNS, UNLESS NOTED OTHERWISE.
10. SEE AW SHEETS FOR WATERPROOFING AND JOINT DETAILS.
11. PROVIDE WALL BRACING UNTIL ALL SLABS ON GRADE ARE IN PLACE FOR WALLS ALONG GRIDS A, B & C BETWEEN GRIDS 4 & 10 AND ALONG GRID 4.

COLUMN SCHEDULE

Type Mark	SIZE	REMARKS
C1	24"X24"	
C2	33"X24"	
C3	33"X33"	

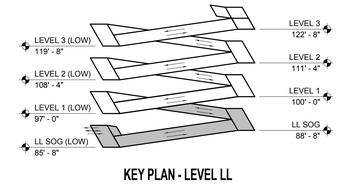

KEY PLAN - LEVEL LL

Revisions:	Date

VA | U.S. Department of Veterans Affairs

VAMC MILWAUKEE
5000 W. National Ave. Milwaukee, WI 53295

MARK A. VANDERWOUDE REGISTERED NO. 10809552 STATE OF INDIANA PROFESSIONAL ENGINEER

ARCHITECT/ENGINEERS:

PROJECT LEAD
Architect, Structural Engineer, Civil Engineer
GUIDON DESIGN
905 N. CAPITOL AVE. SUITE 100 INDIANAPOLIS, IN. 46204
317.800.6388 WWW.GUIDONDESIGN.COM
SUSTAINABLE ARCHITECTURE + ENGINEERING

MEP Engineer
APOGEE CONSULTING GROUP
7330 Chapel Hill Road, Suite 202
Raleigh, NC 27607
Tele: 757-663-8513

Functional Design
CARL WALKER INC.
11920 S. Highland Ave. Suite 2107
Lombard, IL 60148
Tele: 630-307-3800

BID SET

Drawing Title: SLAB-ON-GRADE	Project Title: PARKING STRUCTURE LOT 7	Project Number: 14.1020.02	OFFICE OF FACILITIES MANAGEMENT
		Building Number: #152	
Approved for Design Concept: FACILITY MANAGEMENT DIVISION MANAGER	Location: CLEMENT J ZABLOCKI VAMC	Drawing Number: SF101	VA Project Number: 695-324
	Date: 1 DEC 2015 / Checked By: MAV / Drawn By: WJT		VA | U.S. Department of Veterans Affairs

C:\Users\bthomas\Documents\14.1020.02-S-MVA-Garage_WJ-Thomas.rvt

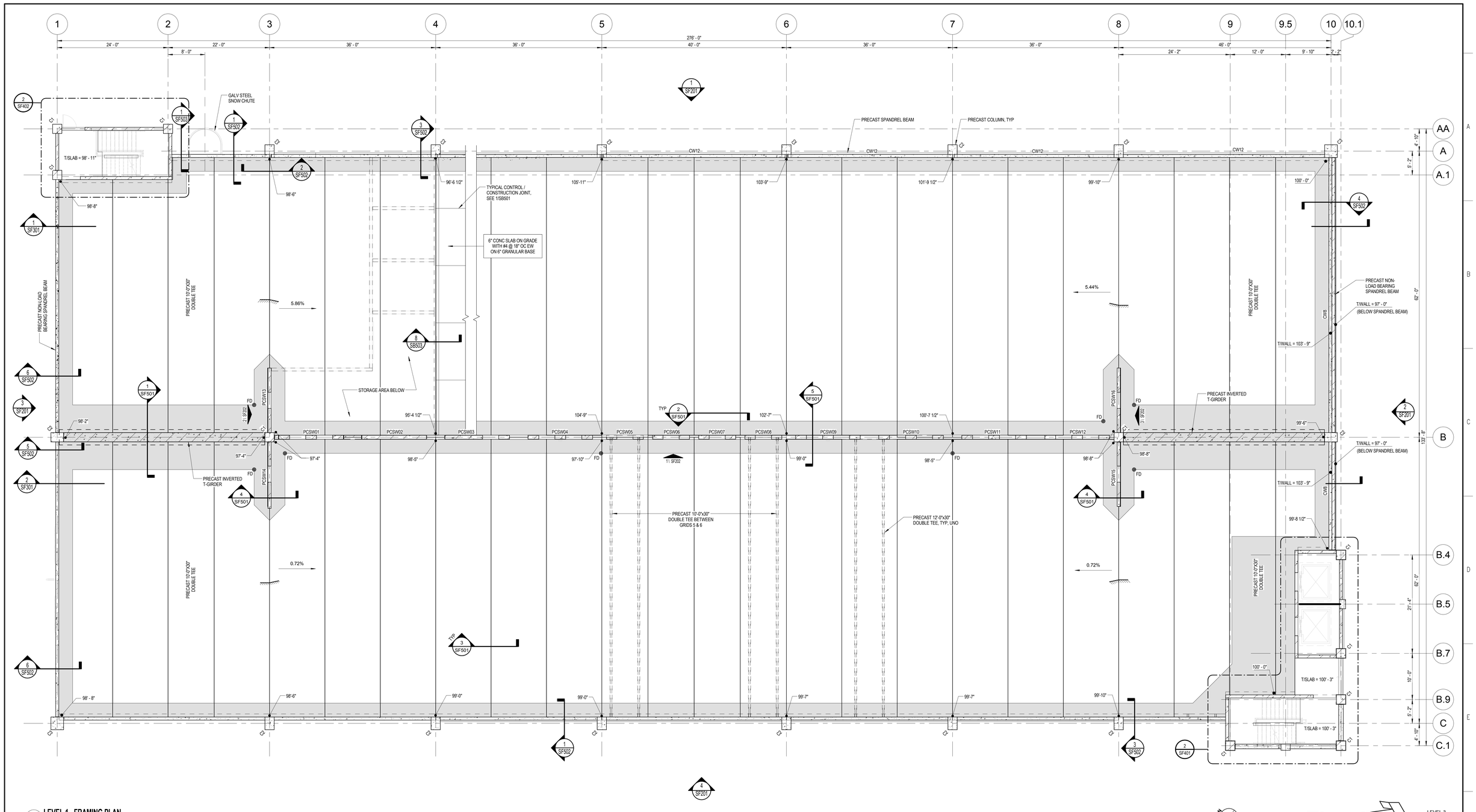

1 SF102 LEVEL 1 - FRAMING PLAN

SCALE: 1/8" = 1'-0"

NOTES:

1. FINISH FLOOR ELEVATION VARIES. REFERENCE ELEVATION IS LEVEL 1 SOUTHWEST STAIR FINISH FLOOR ELEVATION (FIN FLR) = 100'-0". ELEVATION 100'-0" = USGS 642.08 FEET.
2. SEE SI001 FOR ABBREVIATIONS, SYMBOLS & LEGENDS
3. SEE SI002 FOR STRUCTURAL DESIGN LOAD INFORMATION
4. SEE SI003 FOR GENERAL STRUCTURAL NOTES
5. REFERENCE ARCHITECTURAL DRAWINGS FOR LOCATIONS AND SIZES OF DOOR OPENINGS, STAIRS, DOWNSPOUTS RECESSES, ETC.
6. SEE PLAN FOR SLAB SPOT ELEVATIONS. ELEVATIONS DO NOT INCLUDE CONCRETE WASH.
7. INDICATES LOCATION WHERE THE CONCRETE WASH EXISTS, SEE 4/SB501. SEE AW-SERIES SHEETS FOR DIMENSIONS AND DETAILS FOR CONCRETE WASHES.
8. SEE PLAN FOR SLAB ON GRADE CONSTRUCTION.
9. PROVIDE A 1" GAP BETWEEN ALL CAST-IN-PLACE FOUNDATION WALLS AND PRECAST COLUMNS, UNLESS NOTED OTHERWISE.
10. SEE AW SHEETS FOR WATERPROOFING AND JOINT DETAILS.

COLUMN SCHEDULE

Type Mark	SIZE	REMARKS
C1	24"X24"	
C2	33"X24"	
C3	33"X33"	

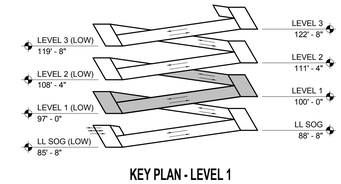

KEY PLAN - LEVEL 1

Revisions:	Date

VA | U.S. Department of Veterans Affairs

VAMC MILWAUKEE
5000 W. National Ave. Milwaukee, WI 53295

ARCHITECT/ENGINEERS:

PROJECT LEAD
Architect, Structural Engineer, Civil Engineer
GUIDON DESIGN
905 N. CAPITOL AVE. SUITE 100 INDIANAPOLIS, IN. 46204
317.800.6388 WWW.GUIDONDESIGN.COM
SUSTAINABLE ARCHITECTURE + ENGINEERING

MEP Engineer
APOGEE CONSULTING GROUP
7330 Chapel Hill Road, Suite 202
Raleigh, NC 27607
Tele: 757-663-8513

Functional Design
CARL WALKER INC.
11920 S. Highland Ave. Suite 2107
Lombard, IL 60148
Tele: 630-307-3800

BID SET

Drawing Title: LEVEL 1 - FRAMING PLAN	Project Title: PARKING STRUCTURE LOT 7	Project Number: 14.1020.02	OFFICE OF FACILITIES MANAGEMENT
		Building Number: #152	
Approved for Design Concept: FACILITY MANAGEMENT DIVISION MANAGER	Location: CLEMENT J ZABLOCKI VAMC	Drawing Number: SF102	VA Project Number: 695-324
	Date: 1 DEC 2015 / Checked By: MAV / Drawn By: WJT		VA | U.S. Department of Veterans Affairs

C:\Users\bthomas\Documents\14.1020.02-S-MVA-Garage_WJ.Thomas.rvt

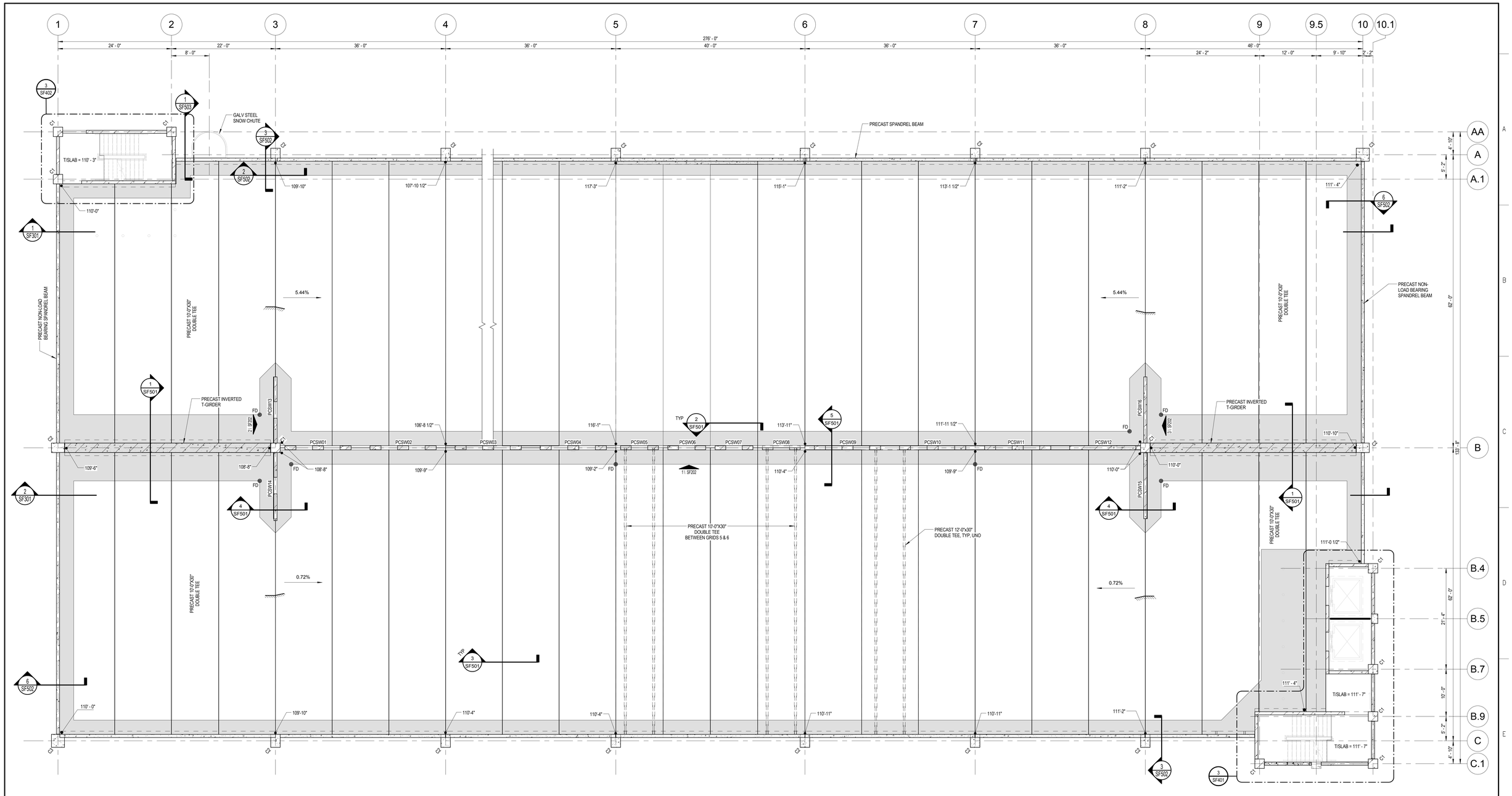

1 SF103 LEVEL 2 - FRAMING PLAN

SCALE: 1/8" = 1'-0"

NOTES:

1. FINISH FLOOR ELEVATION VARIES. REFERENCE ELEVATION IS LEVEL 1 SOUTHWEST STAIR FINISH FLOOR ELEVATION (FIN FLR) = 100'-0". ELEVATION 100'-0" = USGS 642.08 FEET.
2. SEE SI001 FOR ABBREVIATIONS, SYMBOLS & LEGENDS
3. SEE SI002 FOR STRUCTURAL DESIGN LOAD INFORMATION
4. SEE SI003 FOR GENERAL STRUCTURAL NOTES
5. REFERENCE ARCHITECTURAL DRAWINGS FOR LOCATIONS AND SIZES OF DOOR OPENINGS, STAIRS, DOWNSPOUTS RECESSES, ETC.
6. SEE PLAN FOR SLAB SPOT ELEVATIONS. ELEVATIONS DO NOT INCLUDE CONCRETE WASH.
7. INDICATES LOCATION WHERE THE CONCRETE WASH EXISTS, SEE 4/SB501. SEE AW-SERIES SHEETS FOR DIMENSIONS AND DETAILS FOR CONCRETE WASHES.
8. SEE PLAN FOR SLAB ON GRADE CONSTRUCTION.
9. PROVIDE A 1" GAP BETWEEN ALL CAST-IN-PLACE FOUNDATION WALLS AND PRECAST COLUMNS, UNLESS NOTED OTHERWISE.
10. SEE AW SHEETS FOR WATERPROOFING AND JOINT DETAILS.

COLUMN SCHEDULE

Type Mark	SIZE	REMARKS
C1	24"X24"	
C2	33"X24"	
C3	33"X33"	

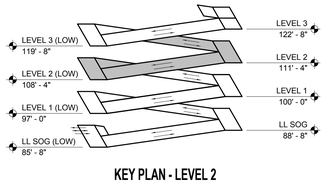

KEY PLAN - LEVEL 2

Revisions:	Date

VA | U.S. Department of Veterans Affairs

VAMC MILWAUKEE
5000 W. National Ave. Milwaukee, WI 53295

MARK A. VANDERHAAR REGISTERED NO. 10809552 STATE OF INDIANA PROFESSIONAL ENGINEER

ARCHITECT/ENGINEERS:

PROJECT LEAD
Architect, Structural Engineer, Civil Engineer
GUIDON DESIGN
905 N. CAPITOL AVE. SUITE 100 INDIANAPOLIS, IN. 46204
317.800.6388 WWW.GUIDONDESIGN.COM
SUSTAINABLE ARCHITECTURE + ENGINEERING

MEP Engineer
APOGEE CONSULTING GROUP
7330 Chapel Hill Road, Suite 202
Raleigh, NC 27607
Tele: 757-663-8513

Functional Design
CARL WALKER INC.
11920 S. Highland Ave. Suite 2107
Lombard, IL 60148
Tele: 630-307-3800

BID SET

Drawing Title	Project Title	Project Number	
LEVEL 2 - FRAMING PLAN	PARKING STRUCTURE LOT 7	14.1020.02	OFFICE OF FACILITIES MANAGEMENT
		Building Number #152	
Approved for Design Concept: FACILITY MANAGEMENT DIVISION MANAGER	Location CLEMENT J ZABLOCKI VAMC	Drawing Number	VA Project Number 695-324
	Date 1 DEC 2015 / Checked By: MAV / Drawn By: WJT	SF103	VA U.S. Department of Veterans Affairs

C:\Users\thomas\Documents\14.1020.02-S-MVA-Garage_WJThomas.rvt

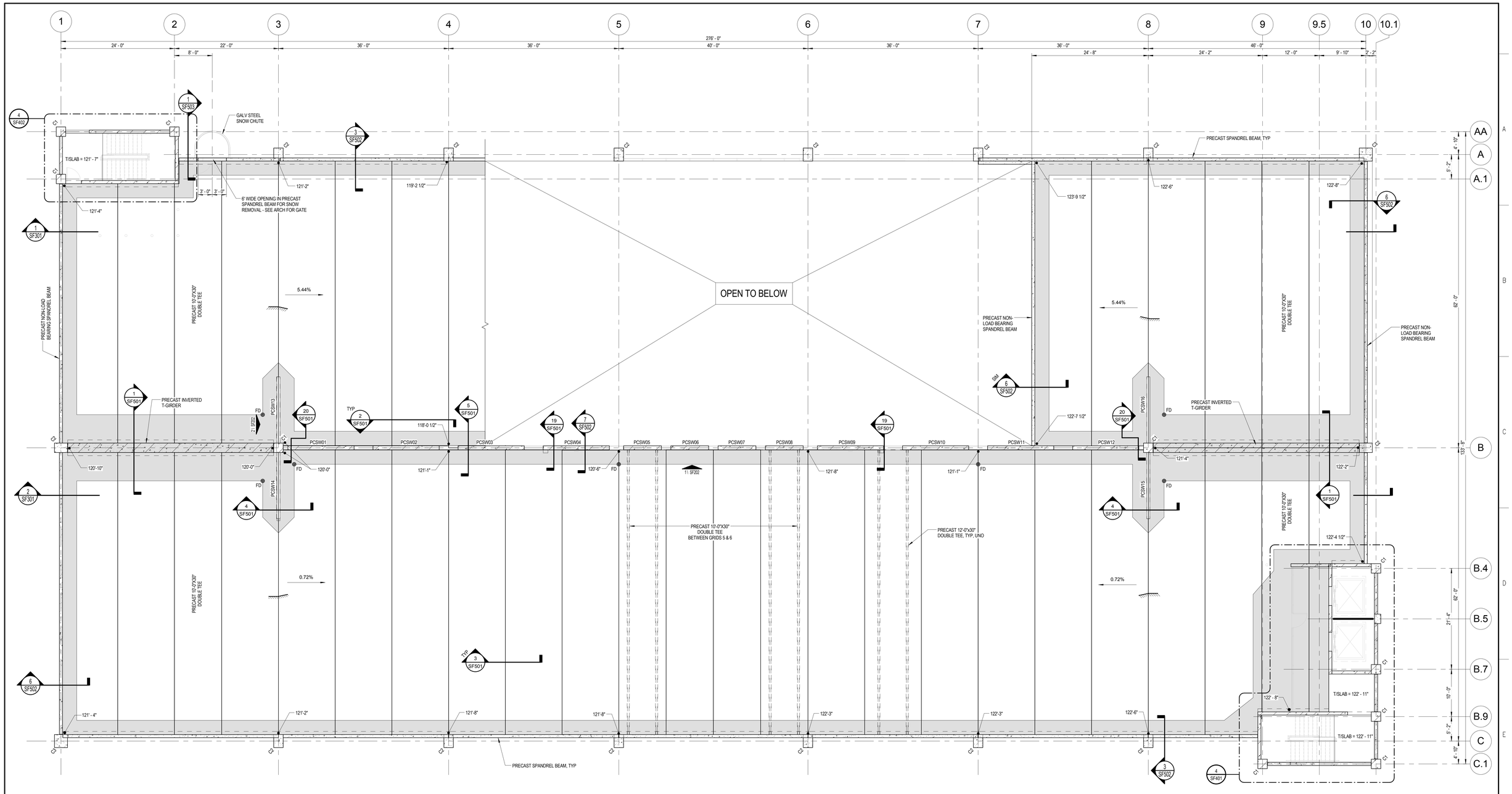

1 LEVEL 3 - FRAMING PLAN

SF104 / SCALE: 1/8" = 1'-0"

NOTES:

1. FINISH FLOOR ELEVATION VARIES. REFERENCE ELEVATION IS LEVEL 1 SOUTHWEST STAIR FINISH FLOOR ELEVATION (FIN FLR) = 100'-0". ELEVATION 100'-0" = USGS 642.08 FEET.
2. SEE S1001 FOR ABBREVIATIONS, SYMBOLS & LEGENDS
3. SEE S1002 FOR STRUCTURAL DESIGN LOAD INFORMATION
4. SEE S1003 FOR GENERAL STRUCTURAL NOTES
5. REFERENCE ARCHITECTURAL DRAWINGS FOR LOCATIONS AND SIZES OF DOOR OPENINGS, STAIRS, DOWNSPOUTS RECESSES, ETC.
6. SEE PLAN FOR SLAB SPOT ELEVATIONS. ELEVATIONS DO NOT INCLUDE CONCRETE WASH.
7. INDICATES LOCATION WHERE THE CONCRETE WASH EXISTS, SEE 4/SB501. SEE AW-SERIES SHEETS FOR DIMENSIONS AND DETAILS FOR CONCRETE WASHES.
8. SEE PLAN FOR SLAB ON GRADE CONSTRUCTION.
9. PROVIDE A 1" GAP BETWEEN ALL CAST-IN-PLACE FOUNDATION WALLS AND PRECAST COLUMNS, UNLESS NOTED OTHERWISE.
10. SEE AW SHEETS FOR WATERPROOFING AND JOINT DETAILS.

COLUMN SCHEDULE

Type Mark	SIZE	REMARKS
C1	24"X24"	
C2	33"X24"	
C3	33"X33"	

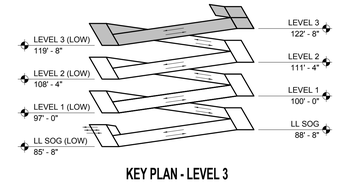

KEY PLAN - LEVEL 3

Revisions:	Date

VA | U.S. Department of Veterans Affairs

VAMC MILWAUKEE
5000 W. National Ave. Milwaukee, WI 53295

MARK A. VANDERMUELEN REGISTERED NO. 10809552 STATE OF INDIANA PROFESSIONAL ENGINEER

ARCHITECT/ENGINEERS:

PROJECT LEAD
Architect, Structural Engineer, Civil Engineer
GUIDON DESIGN
905 N. CAPITOL AVE. SUITE 100 INDIANAPOLIS, IN. 46204
317.800.6388 WWW.GUIDONDESIGN.COM
SUSTAINABLE ARCHITECTURE + ENGINEERING

MEP Engineer
APOGEE CONSULTING GROUP
7330 Chapel Hill Road, Suite 202
Raleigh, NC 27607
Tele: 757-663-8513

Functional Design
CARL WALKER INC.
11920 S. Highland Ave. Suite 2107
Lombard, IL 60148
Tele: 630-307-3800

BID SET

Drawing Title	Project Title	Project Number	
LEVEL 3 - FRAMING PLAN	PARKING STRUCTURE LOT 7	14.1020.02	OFFICE OF FACILITIES MANAGEMENT
		Building Number #152	
Approved for Design Concept: FACILITY MANAGEMENT DIVISION MANAGER	Location CLEMENT J ZABLOCKI VAMC	Drawing Number SF104	VA Project Number 695-324
	Date 1 DEC 2015 / Checked By: MAV / Drawn By: WJT		VA U.S. Department of Veterans Affairs

C:\Users\bthomas\Documents\14.1020.02-S-MVA-Garage_WJThomas.rvt

NOTE: INTENT OF ELEVATIONS IS TO SHOW WALL CONTROL JOINTS. PRECAST WALLS AND COLUMNS NOT SHOWN FOR CLARITY

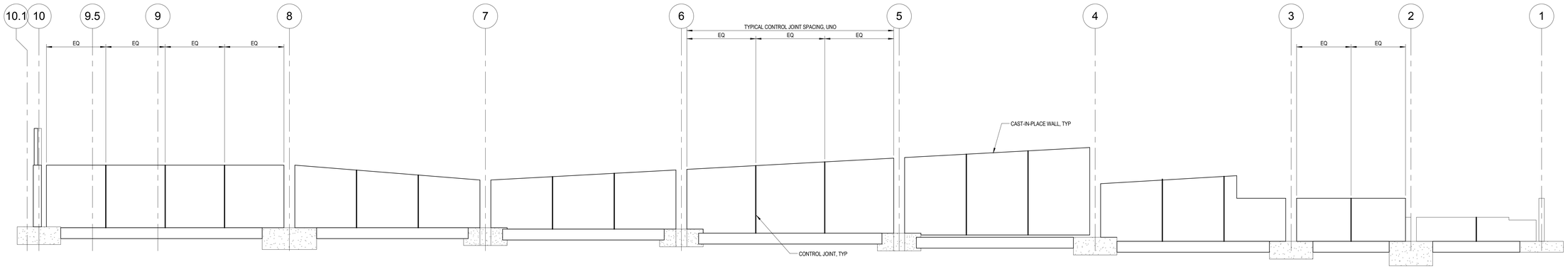

1 SF201 **GRADE WALL ELEVATION AT GRID A**
SCALE: 1/8" = 1'-0"

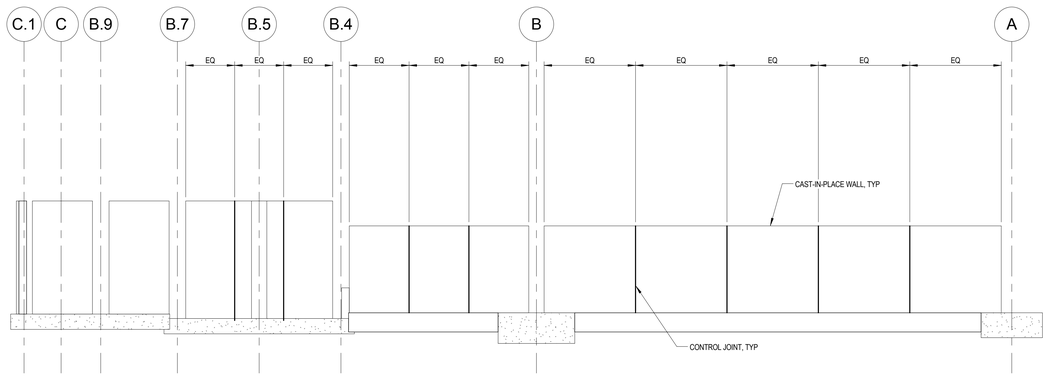

2 SF201 **GRADE WALL ELEVATION AT GRID 10**
SCALE: 1/8" = 1'-0"

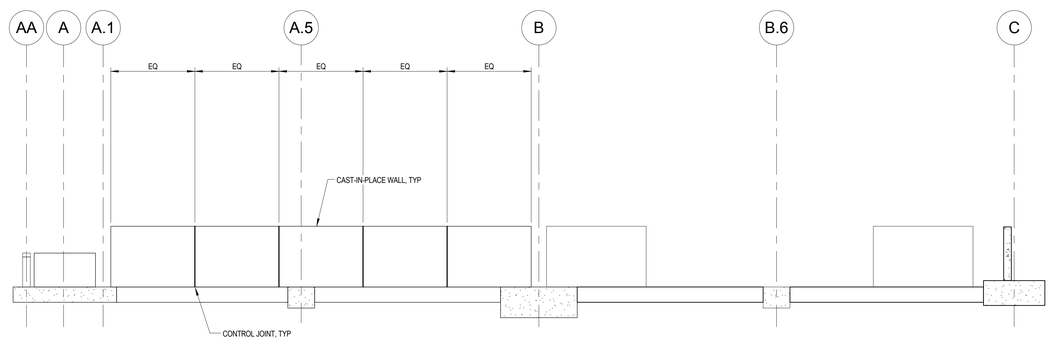

3 SF201 **GRADE WALL ELEVATION AT GRID 1**
SCALE: 1/8" = 1'-0"

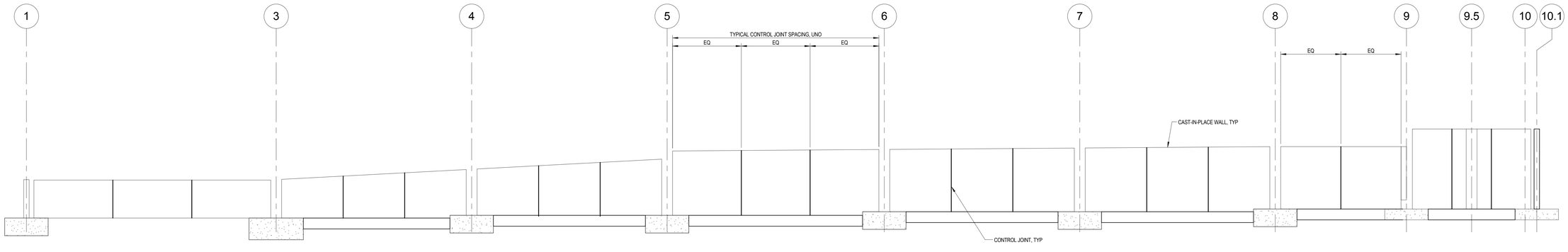

4 SF201 **GRADE WALL ELEVATION AT GRID C**
SCALE: 1/8" = 1'-0"

Revisions:	Date

VA | U.S. Department of Veterans Affairs

VAMC MILWAUKEE
5000 W. National Ave. Milwaukee, WI 53295

MARK A. VANDERPOOL REGISTERED NO. 10809552 STATE OF INDIANA PROFESSIONAL ENGINEER

ARCHITECT/ENGINEERS:

PROJECT LEAD
Architect, Structural Engineer, Civil Engineer
GUIDON DESIGN
905 N. CAPITOL AVE. SUITE 100 INDIANAPOLIS, IN. 46204
317.800.6388 WWW.GUIDONDESIGN.COM
SUSTAINABLE ARCHITECTURE + ENGINEERING

MEP Engineer
APOGEE CONSULTING GROUP
7330 Chapel Hill Road, Suite 202
Raleigh, NC 27607
Tele: 757-663-8513

Functional Design
CARL WALKER INC.
11920 S. Highland Ave. Suite 2107
Lombard, IL 60148
Tele: 630-307-3800

BID SET

Drawing Title	Project Title	Project Number	OFFICE OF FACILITIES MANAGEMENT
CAST IN PLACE WALL ELEVATIONS	PARKING STRUCTURE LOT 7	14.1020.02	
		Building Number #152	
Approved for Design Concept: FACILITY MANAGEMENT DIVISION MANAGER	Location CLEMENT J ZABLOCKI VAMC	Drawing Number SF201	VA Project Number 695-324
	Date 1 DEC 2015 / Checked By: MAV / Drawn By: WJT		VA U.S. Department of Veterans Affairs

C:\Users\bthomas\Documents\14.1020.02-S-MVA-Garage_WJ.Thomas.rvt

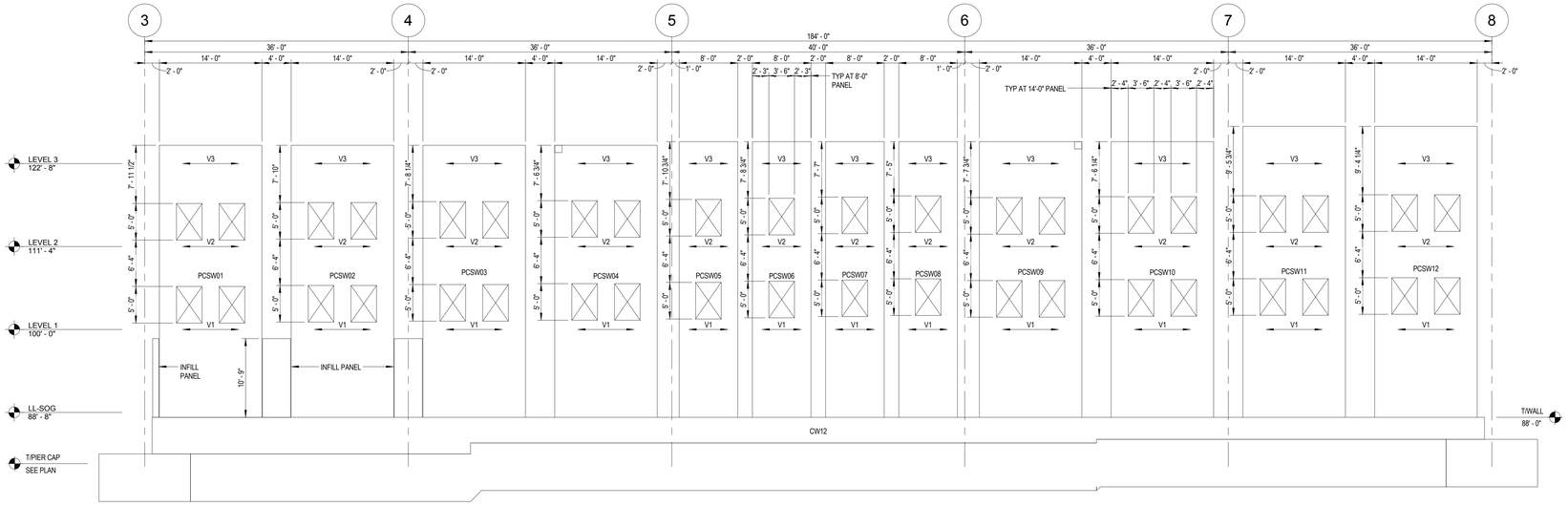

1 SF202 **INTERIOR SHEARWALL ELEVATION @ GRID B**
SCALE: 1/8" = 1'-0"

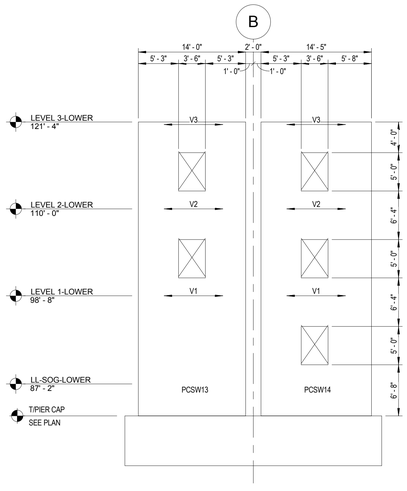

2 SF202 **INTERIOR SHEARWALL ELEVATION @ GRID 3**
SCALE: 1/8" = 1'-0"

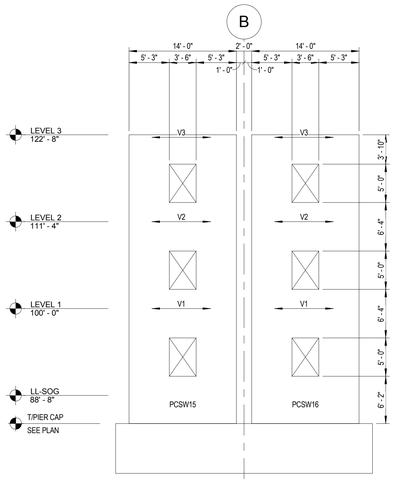

3 SF202 **INTERIOR SHEARWALL ELEVATION @ GRID 8**
SCALE: 1/8" = 1'-0"

SHEARWALL LATERAL FORCE DISTRIBUTION SCHEDULE

LOAD ID		PCSW01		PCSW02		PCSW03		PCSW04		PCSW05		PCSW06		PCSW07	
		Kip	Elev (ft)	Kip	Elev (ft)	Kip	Elev (ft)	Kip	Elev (ft)	Kip	Elev (ft)	Kip	Elev (ft)	Kip	Elev (ft)
V3		18.00	122.67	18.00	122.67	18.00	122.67	18.00	122.67	4.00	122.67	4.00	122.67	4.00	122.67
V2		10.00	111.33	10.00	111.33	10.00	111.33	10.00	111.33	3.00	111.33	3.00	111.33	3.00	111.33
V1		5.00	100.00	5.00	100.00	5.00	100.00	5.00	100.00	1.00	100.00	1.00	100.00	1.00	100.00
TOTAL @ TOP	V	33.00	K	33.00	K	33.00	K	33.00	K	8.00	K	8.00	K	8.00	K
OF FOOTING	M	895.33	K-FT	895.33	K-FT	895.33	K-FT	895.33	K-FT	215.33	K-FT	215.33	K-FT	215.33	K-FT

LOAD ID		PCSW08		PCSW09		PCSW10		PCSW11		PCSW12		PCSW13		PCSW14	
		Kip	Elev (ft)	Kip	Elev (ft)	Kip	Elev (ft)	Kip	Elev (ft)	Kip	Elev (ft)	Kip	Elev (ft)	Kip	Elev (ft)
V3		4.00	122.67	18.00	122.67	18.00	122.67	18.00	122.67	18.00	122.67	38.00	122.67	38.00	122.67
V2		3.00	111.33	10.00	111.33	10.00	111.33	10.00	111.33	10.00	111.33	21.00	111.33	21.00	111.33
V1		1.00	100.00	5.00	100.00	5.00	100.00	5.00	100.00	5.00	100.00	9.00	100.00	9.00	100.00
TOTAL @ TOP	V	8.00	K	33.00	K	33.00	K	33.00	K	33.00	K	68.00	K	68.00	K
OF FOOTING	M	215.33	K-FT	895.33	K-FT	895.33	K-FT	895.33	K-FT	895.33	K-FT	1870.00	K-FT	1870.00	K-FT

LOAD ID		PCSW15		PCSW16	
		Kip	Elev (ft)	Kip	Elev (ft)
V3		38.00	122.67	38.00	122.67
V2		21.00	111.33	21.00	111.33
V1		9.00	100.00	9.00	100.00
TOTAL @ TOP	V	68.00	K	68.00	K
OF FOOTING	M	1870.00	K-FT	1870.00	K-FT

NOTES:

1. FORCES GIVEN ARE HORIZONTAL SEISMIC SHEAR FORCES UNLESS NOTED OTHERWISE AND SHALL BE USED WITH THE APPROPRIATE EQUATIONS FROM THE IBC 2012 CODE TO DETERMINE THE MOST CRITICAL COMBINED EFFECT. FORCES SHOWN ARE REVERSIBLE AND STRENGTH LEVEL.
2. PRECASTER SHALL DESIGN ALL SHEARWALLS FOR THE GREATER FORCE OF SEISMIC SHOWN AND WIND AS DEFINED IN THE GENERAL NOTES.
3. PRECASTER SHALL VERIFY THAT SHEARWALL SEISMIC AND WIND FORCES DO NOT EXCEED THOSE SHOWN IN THE LATERAL FORCE SCHEDULE.
4. FORCES SHOWN MAY HAVE TO BE INCREASED FOR DIAPHRAGM AND CONNECTION DESIGN PER ASCE7-10 AND IBC 2012.
5. PRECASTER SHALL DESIGN ALL PRECAST ELEMENTS INCLUDING REINFORCING, CONNECTIONS, AND LATERAL FORCE TRANSFER ELEMENTS. SEE PRECAST SPECIFICATION FOR MORE INFORMATION.
6. FOR SHEARWALL SIZES, SEE SHEARWALL ELEVATIONS AND SHEARWALL SCHEDULE.
7. SEE PLANS FOR SHEARWALL DESIGNATION.
8. SHEARWALLS AND COLUMNS SHALL BE CONNECTED WHERE APPLICABLE SO THAT THEY ACT AS ONE INTEGRAL UNIT. ELEVATION OF LATERAL FORCE GIVEN IS THE APPROXIMATE TOP OF SLAB ELEVATION AT THE MIDDLE OF THE SHEARWALL.

SHEARWALL SCHEDULE

WALL	THICKNESS	LENGTH	DESIGN REACTIONS DEAD LOAD (KIPS/FT)	LIVE LOAD (KIPS/FT)	TOTAL LOAD (KIPS/FT)	REMARKS
PCSW01	10"	14' - 0"	24.0	12.0	36	
PCSW02	10"	14' - 0"	24.0	12.0	36	
PCSW03	10"	14' - 0"	24.0	12.0	36	
PCSW04	10"	14' - 0"	24.0	12.0	36	
PCSW05	10"	8' - 0"	24.0	12.0	36	
PCSW06	10"	8' - 0"	24.0	12.0	36	
PCSW07	10"	8' - 0"	24.0	12.0	36	
PCSW08	10"	8' - 0"	24.0	12.0	36	
PCSW09	10"	14' - 0"	24.0	12.0	36	
PCSW10	10"	14' - 0"	24.0	12.0	36	
PCSW11	10"	14' - 0"	24.0	12.0	36	
PCSW12	10"	14' - 0"	24.0	14.0	38	
PCSW13	8"	14' - 0"	24.0	12.0	36	
PCSW14	8"	14' - 5"	24.0	12.0	36	
PCSW15	8"	14' - 0"	24.0	12.0	36	
PCSW16	8"	14' - 0"	24.0	12.0	36	

Revisions: Date

VA U.S. Department of Veterans Affairs

VAMC MILWAUKEE
5000 W. National Ave. Milwaukee, WI 53295

MARK A. VANDERVUSE REGISTERED NO. 10809552 STATE OF INDIANA PROFESSIONAL ENGINEER

ARCHITECT/ENGINEERS:

PROJECT LEAD
Architect, Structural Engineer, Civil Engineer
GUIDON DESIGN
905 N. CAPITOL AVE. SUITE 100 INDIANAPOLIS, IN. 46204
317.800.6388 WWW.GUIDONDESIGN.COM
SUSTAINABLE ARCHITECTURE + ENGINEERING

MEP Engineer
APOGEE CONSULTING GROUP
7330 Chapel Hill Road, Suite 202
Raleigh, NC 27607
Tele: 757-663-8513

Functional Design
CARL WALKER INC.
11920 S. Highland Ave. Suite 2107
Lombard, IL 60148
Tele: 630-307-3800

BID SET

Drawing Title: SHEARWALL ELEVATIONS AND SCHEDULES	Project Title: PARKING STRUCTURE LOT 7	Project Number: 14.1020.02	OFFICE OF FACILITIES MANAGEMENT
		Building Number: #152	
Approved for Design Concept: FACILITY MANAGEMENT DIVISION MANAGER	Location: CLEMENT J ZABLOCKI VAMC	Drawing Number: SF202	VA Project Number: 695-324
	Date: 1 DEC 2015 / Checked By: MAV / Drawn By: WJT		VA U.S. Department of Veterans Affairs

C:\Users\bthomas\Documents\14.1020.02-S-MVA-Garage_WJTthomas.rvt

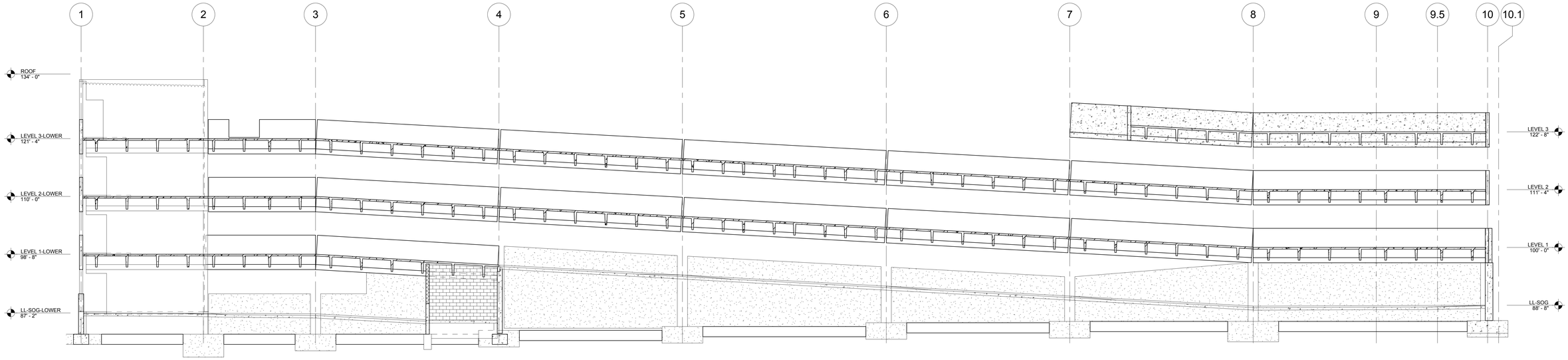

1 SF301 **BUILDING SECTION - NORTH/SOUTH**
SCALE: 1/8" = 1'-0"

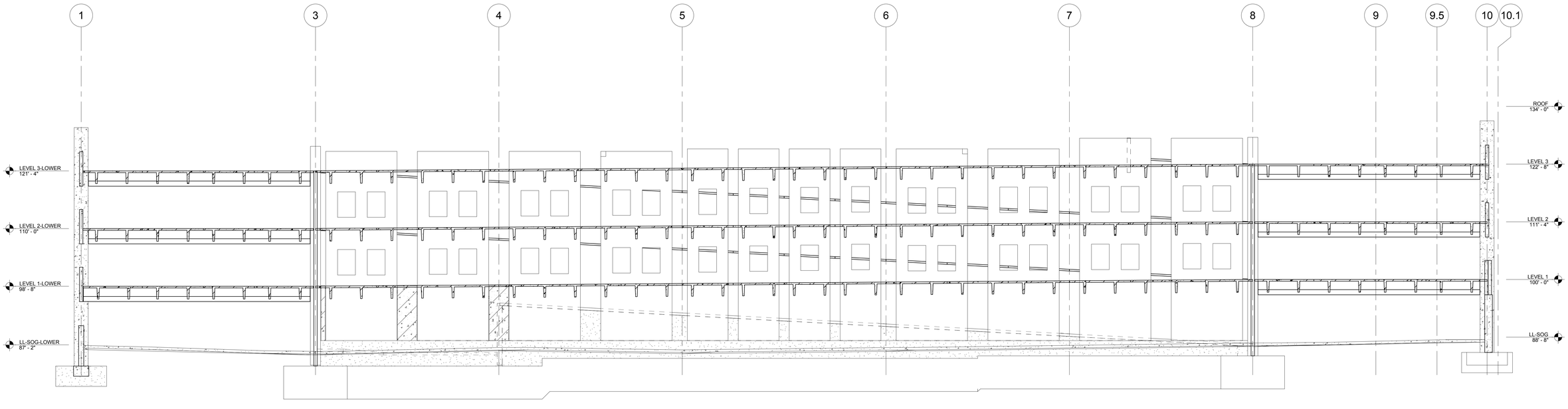

2 SF301 **BUILDING SECTION - NORTH/SOUTH**
SCALE: 1/8" = 1'-0"

Revisions:	Date

VA | U.S. Department of Veterans Affairs

VAMC MILWAUKEE
5000 W. National Ave. Milwaukee, WI 53295

MARK A. VANDERWALL REGISTERED NO. 10809552 STATE OF INDIANA PROFESSIONAL ARCHITECT

ARCHITECT/ENGINEERS:

PROJECT LEAD
Architect, Structural Engineer, Civil Engineer
GUIDON DESIGN
905 N. CAPITOL AVE. SUITE 100 INDIANAPOLIS, IN. 46204
317.800.6388 WWW.GUIDONDESIGN.COM
SUSTAINABLE ARCHITECTURE + ENGINEERING

MEP Engineer
APOGEE CONSULTING GROUP
7330 Chapel Hill Road, Suite 202
Raleigh, NC 27607
Tele: 757-663-8513

Functional Design
CARL WALKER INC.
11920 S. Highland Ave. Suite 2107
Lombard, IL 60148
Tele: 630-307-3800

BID SET

Drawing Title: BUILDING SECTIONS	Project Title: PARKING STRUCTURE LOT 7	Project Number: 14.1020.02	OFFICE OF FACILITIES MANAGEMENT
		Building Number: #152	
Approved for Design Concept: FACILITY MANAGEMENT DIVISION MANAGER	Location: CLEMENT J ZABLOCKI VAMC	Drawing Number: SF301	VA Project Number: 695-324
	Date: 1 DEC 2015 / Checked By: MAV / Drawn By: WJT		VA U.S. Department of Veterans Affairs

C:\Users\bthomas\Documents\14.1020.02-S-MVA-Garage_WJThomas.rvt

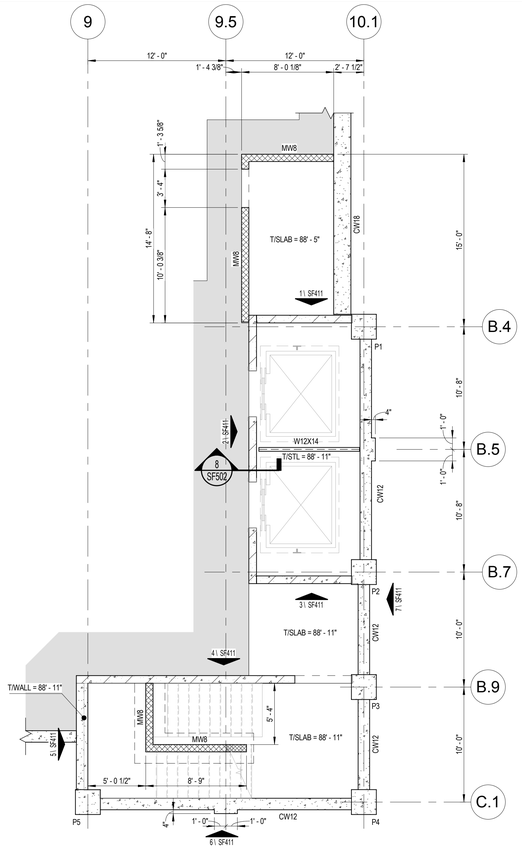

1 SF401 STAIR #1 ENLARGED PLAN @ SLAB ON GRADE
SCALE: 3/16" = 1'-0"

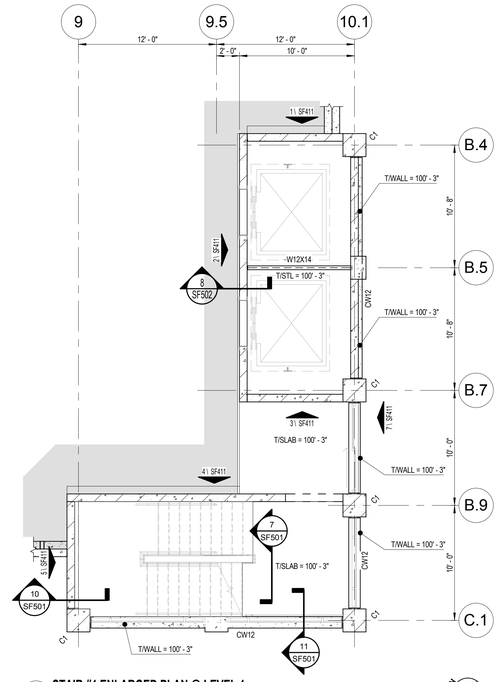

2 SF401 STAIR #1 ENLARGED PLAN @ LEVEL 1
SCALE: 3/16" = 1'-0"

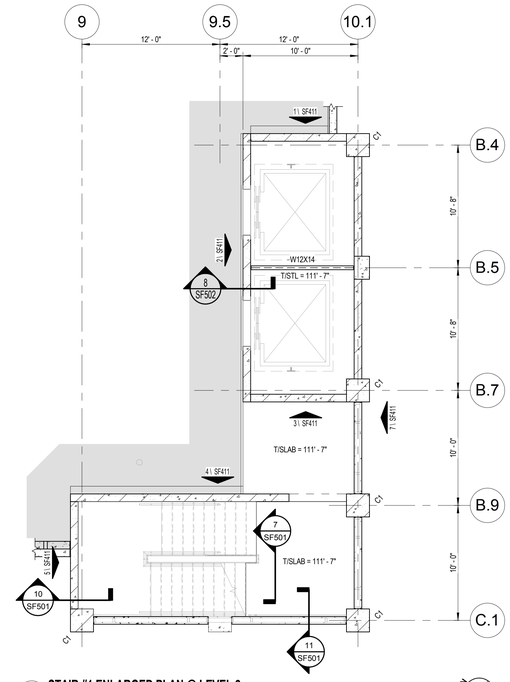

3 SF401 STAIR #1 ENLARGED PLAN @ LEVEL 2
SCALE: 3/16" = 1'-0"

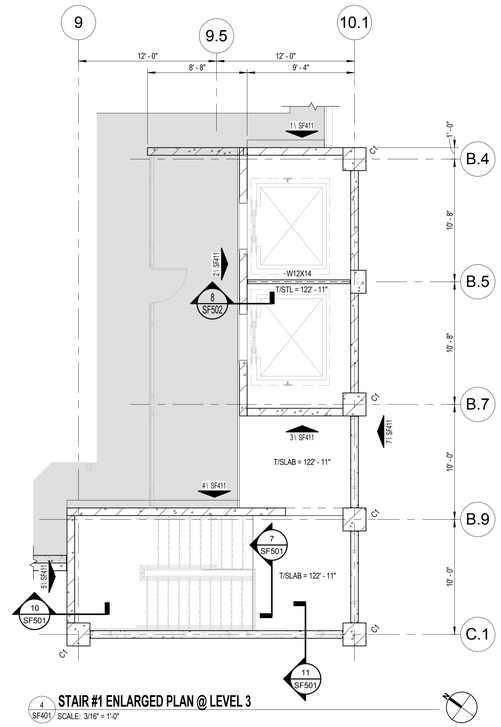

4 SF401 STAIR #1 ENLARGED PLAN @ LEVEL 3
SCALE: 3/16" = 1'-0"

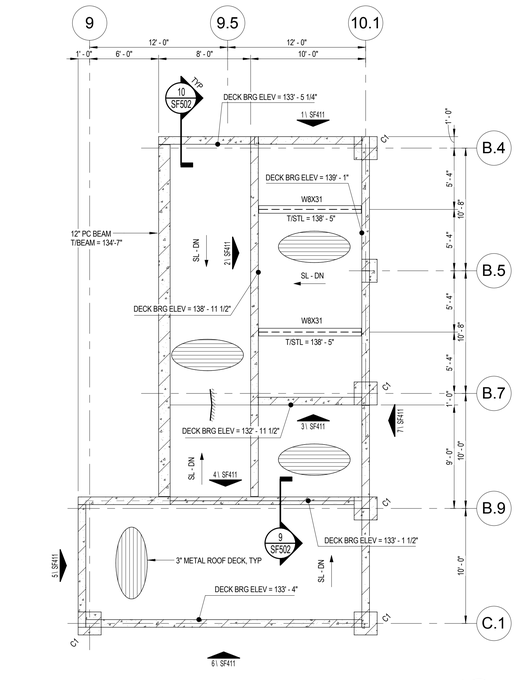

5 SF401 STAIR #1 ENLARGED PLAN @ ROOF LEVELS (ELEVATION VARIES)
SCALE: 3/16" = 1'-0"

Revisions:	Date

VA | U.S. Department of Veterans Affairs

VAMC MILWAUKEE
5000 W. National Ave. Milwaukee, WI 53295

MARK A. VANDERMUELEN REGISTERED NO. 10809552 STATE OF INDIANA PROFESSIONAL ENGINEER

ARCHITECT/ENGINEERS:

PROJECT LEAD
Architect, Structural Engineer, Civil Engineer
GUIDON DESIGN
905 N. CAPITOL AVE. SUITE 100 INDIANAPOLIS, IN. 46204
317.800.6388 WWW.GUIDONDESIGN.COM
SUSTAINABLE ARCHITECTURE + ENGINEERING

MEP Engineer
APOGEE CONSULTING GROUP
7330 Chapel Hill Road, Suite 202
Raleigh, NC 27607
Tele: 757-663-8513

Functional Design
CARL WALKER INC.
11920 S. Highland Ave. Suite 2107
Lombard, IL 60148
Tele: 630-307-3800

BID SET

Drawing Title: STAIR #1 ENLARGED FRAMING AND ROOF PLANS	Project Title: PARKING STRUCTURE LOT 7	Project Number: 14.1020.02	OFFICE OF FACILITIES MANAGEMENT
		Building Number: #152	
Approved for Design Concept: FACILITY MANAGEMENT DIVISION MANAGER	Location: CLEMENT J ZABLOCKI VAMC	Drawing Number: SF401	VA Project Number: 695-324
	Date: 1 DEC 2015 / Checked By: MAV / Drawn By: WJT		VA U.S. Department of Veterans Affairs

C:\Users\bthomas\Documents\14.1020.02-S-MVA-Garage_WJThomas.rvt

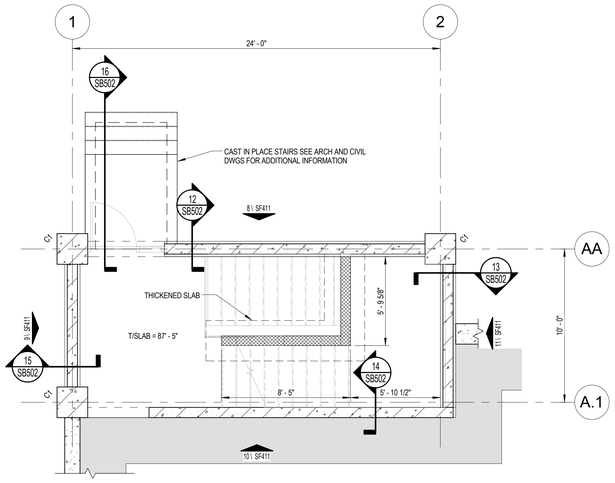

1 SF402 STAIR #2 ENLARGED FRAMING @ SLAB ON GRADE
SCALE: 1/4" = 1'-0"

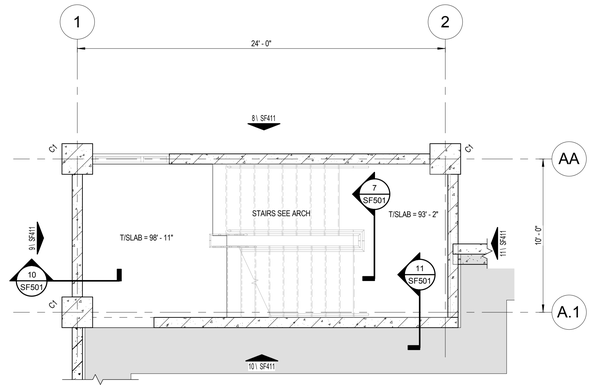

2 SF402 STAIR #2 ENLARGED PLAN @ LEVEL 1
SCALE: 1/4" = 1'-0"

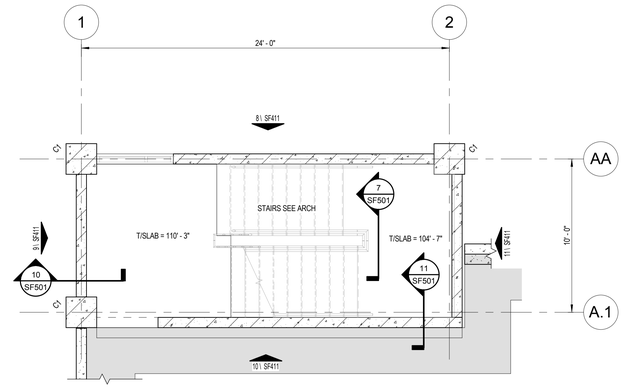

3 SF402 STAIR #2 ENLARGED PLAN @ LEVEL 2
SCALE: 1/4" = 1'-0"

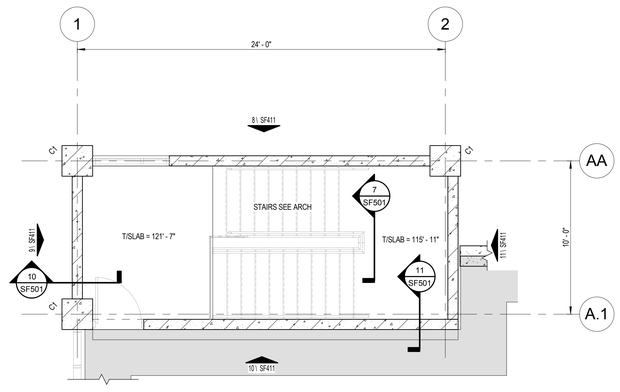

4 SF402 STAIR #2 ENLARGED PLAN @ LEVEL 3
SCALE: 1/4" = 1'-0"

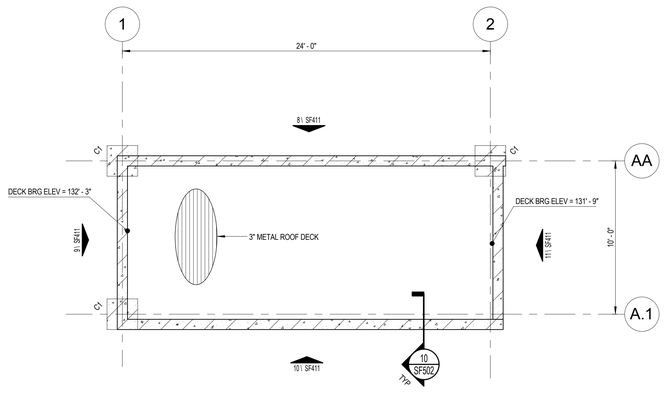

5 SF402 STAIR #2 ENLARGED PLAN @ ROOF
SCALE: 1/4" = 1'-0"

C:\Users\bthomas\Documents\14.1020.02-S-MVA-Garage_WJThomas.rvt

Revisions:	Date

VA | U.S. Department of Veterans Affairs

VAMC MILWAUKEE
5000 W. National Ave. Milwaukee, WI 53295

MARK A. VANDERMULEN REGISTERED NO. 10809552 STATE OF INDIANA PROFESSIONAL ENGINEER

ARCHITECT/ENGINEERS:

PROJECT LEAD
Architect, Structural Engineer, Civil Engineer
GUIDON DESIGN
905 N. CAPITOL AVE. SUITE 100 INDIANAPOLIS, IN. 46204
317.800.6388 WWW.GUIDONDESIGN.COM
SUSTAINABLE ARCHITECTURE + ENGINEERING

MEP Engineer
APOGEE CONSULTING GROUP
7330 Chapel Hill Road, Suite 202
Raleigh, NC 27607
Tele: 757-663-8513

Functional Design
CARL WALKER INC.
11920 S. Highland Ave. Suite 2107
Lombard, IL 60148
Tele: 630-307-3800

BID SET

Drawing Title: STAIR #2 ENLARGED FRAMING AND ROOF PLANS	Project Title: PARKING STRUCTURE LOT 7	Project Number: 14.1020.02	OFFICE OF FACILITIES MANAGEMENT
		Building Number: #152	
Approved for Design Concept: FACILITY MANAGEMENT DIVISION MANAGER	Location: CLEMENT J ZABLOCKI VAMC	Drawing Number: SF402	VA Project Number: 695-324
	Date: 1 DEC 2015 / Checked By: MAV / Drawn By: WJT		VA | U.S. Department of Veterans Affairs

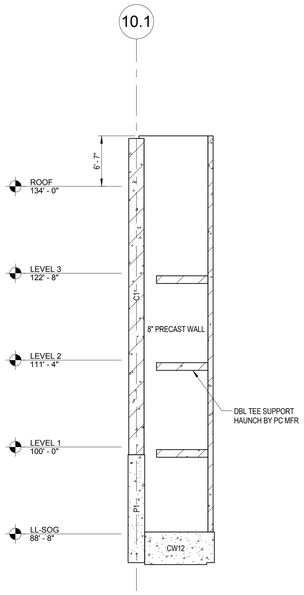

1 SF411 **PRECAST ELEVATION AT GRID B.4**
SCALE: 1/8" = 1'-0"

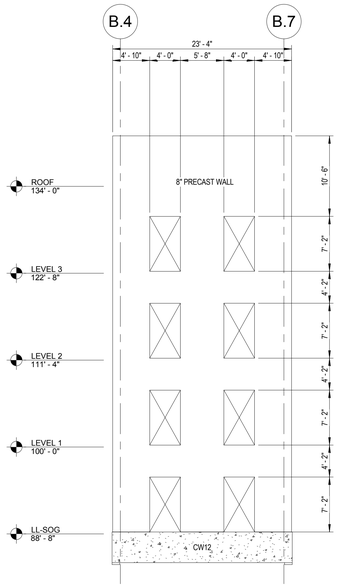

2 SF411 **PRECAST ELEVATION AT GRID 9.5**
SCALE: 1/8" = 1'-0"

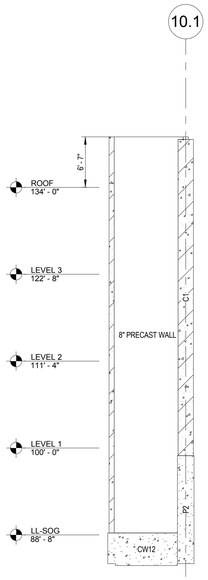

3 SF411 **PRECAST ELEVATION AT GRID B.7**
SCALE: 1/8" = 1'-0"

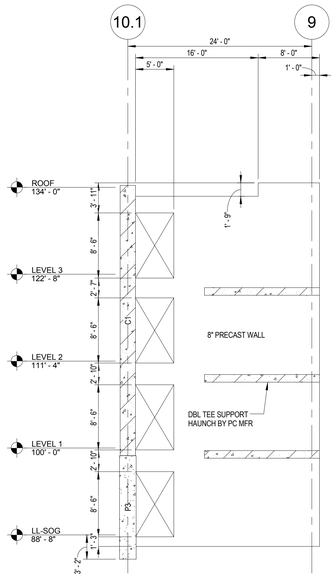

4 SF411 **PRECAST ELEVATION AT GRID B.9**
SCALE: 1/8" = 1'-0"

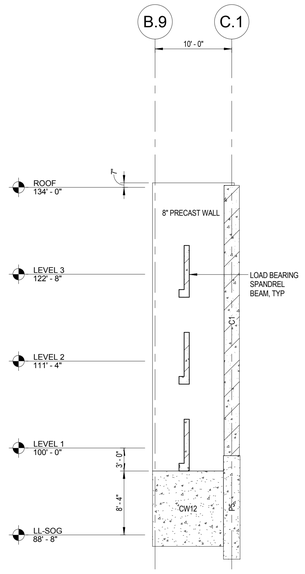

5 SF411 **PRECAST ELEVATION AT GRID 9**
SCALE: 1/8" = 1'-0"

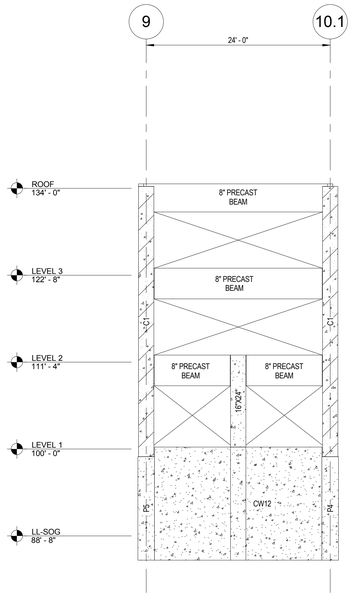

6 SF411 **PRECAST ELEVATION AT GRID C.1**
SCALE: 1/8" = 1'-0"

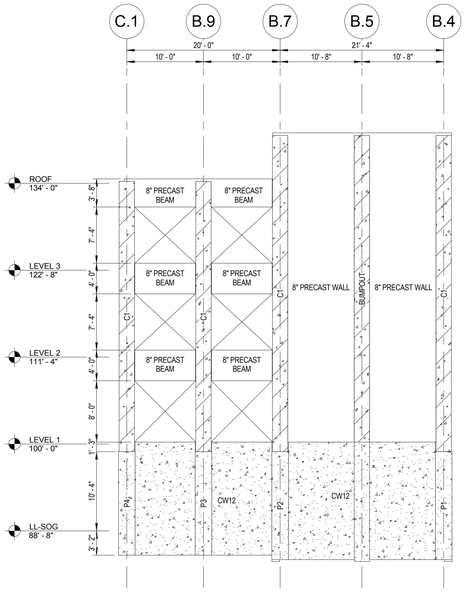

7 SF411 **PRECAST ELEVATION AT GRID 10.1**
SCALE: 1/8" = 1'-0"

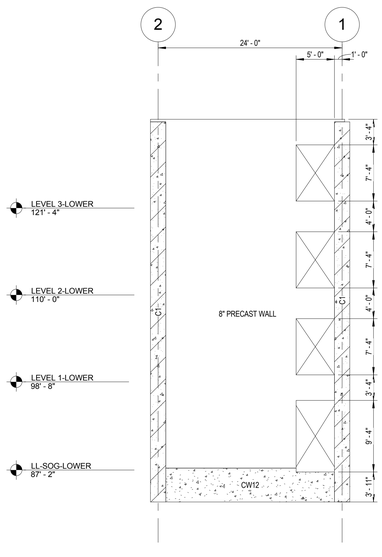

8 SF411 **PRECAST ELEVATION AT GRID AA**
SCALE: 1/8" = 1'-0"

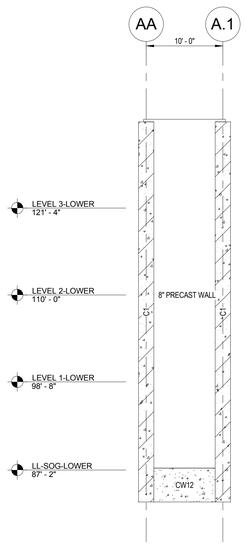

9 SF411 **PRECAST ELEVATION AT GRID 1**
SCALE: 1/8" = 1'-0"

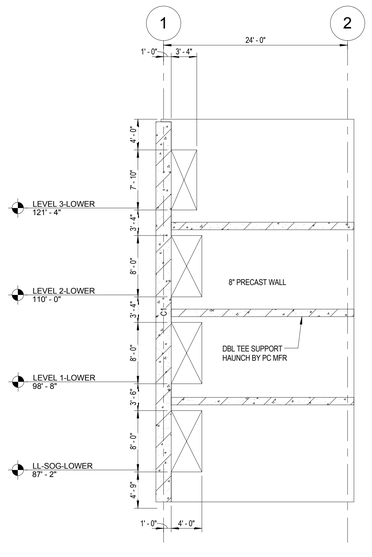

10 SF411 **PRECAST ELEVATION AT GRID A.1**
SCALE: 1/8" = 1'-0"

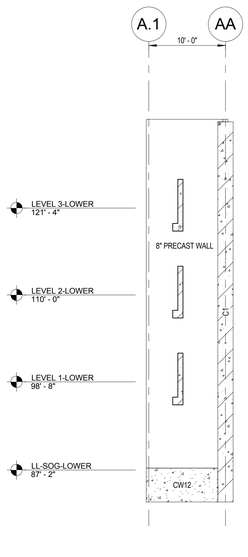

11 SF411 **PRECAST ELEVATION AT GRID 2**
SCALE: 1/8" = 1'-0"

Revisions:	Date

VA | U.S. Department of Veterans Affairs

VAMC MILWAUKEE
5000 W. National Ave. Milwaukee, WI 53295

MARK A. VANDERMULEN REGISTERED NO. 10809552 STATE OF INDIANA PROFESSIONAL ENGINEER

ARCHITECT/ENGINEERS:

PROJECT LEAD
Architect, Structural Engineer, Civil Engineer
GUIDON DESIGN
905 N. CAPITOL AVE. SUITE 100 INDIANAPOLIS, IN. 46204
317.800.6388 WWW.GUIDONDESIGN.COM
SUSTAINABLE ARCHITECTURE + ENGINEERING

MEP Engineer
APOGEE CONSULTING GROUP
7330 Chapel Hill Road, Suite 202
Raleigh, NC 27607
Tele: 757-663-8513

Functional Design
CARL WALKER INC.
11920 S. Highland Ave. Suite 2107
Lombard, IL 60148
Tele: 630-307-3800

BID SET

Drawing Title: PRECAST WALL ELEVATIONS	Project Title: PARKING STRUCTURE LOT 7	Project Number: 14.1020.02	OFFICE OF FACILITIES MANAGEMENT
		Building Number: #152	
Approved for Design Concept: FACILITY MANAGEMENT DIVISION MANAGER	Location: CLEMENT J ZABLOCKI VAMC	Drawing Number: SF411	VA Project Number: 695-324
	Date: 1 DEC 2015 / Checked By: MAV / Drawn By: WJT		VA | U.S. Department of Veterans Affairs

C:\Users\bthomas\Documents\14.1020.02-S-MVA-Garage_WJThomas.rvt

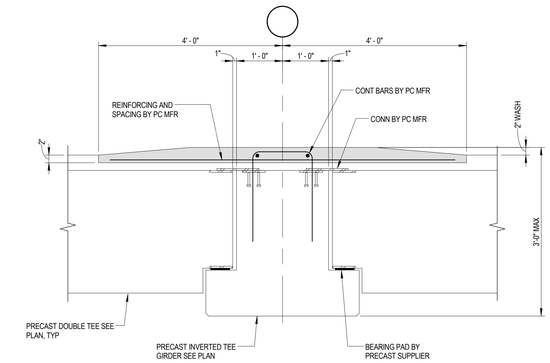

1 SF501 **DOUBLE TEE AT INVERTED TEE BEAM**
SCALE: 3/4" = 1'-0"

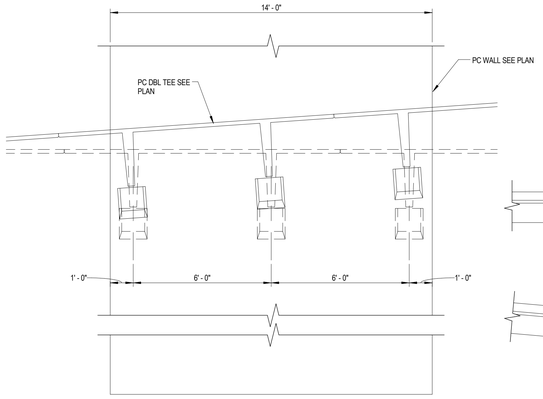

2 SF501 **RAMP WALL ELEVATION**
SCALE: 3/8" = 1'-0"

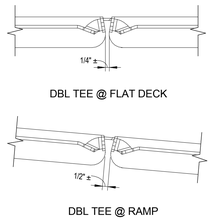

3 SF501 **DOUBLE TEE SHEAR CONNECTION**
SCALE: 1 1/2" = 1'-0"

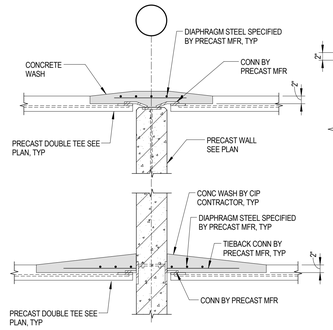

4 SF501 **DOUBLE TEE TO WALL SHEAR CONNECTION**
SCALE: 3/4" = 1'-0"

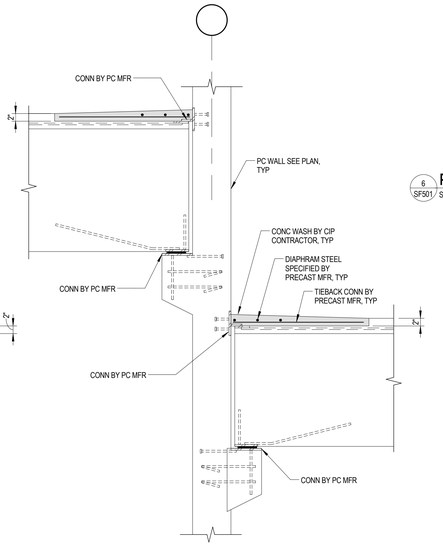

5 SF501 **DOUBLE TEE TO WALL CONNECTION**
SCALE: 3/4" = 1'-0"

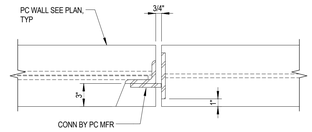

6 SF501 **PARALLEL WALL SECTION CONNECTION**
SCALE: 1 1/2" = 1'-0"

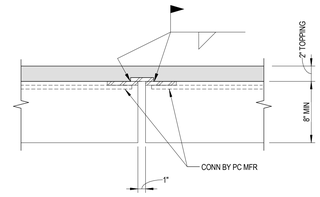

7 SF501 **STAIR TO STAIR CONNECTION**
SCALE: 1 1/2" = 1'-0"

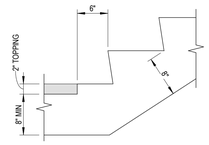

8 SF501 **LANDING AT STAIR BOTTOM**
SCALE: 1" = 1'-0"

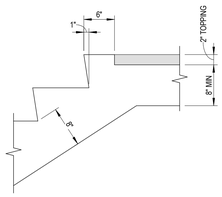

9 SF501 **LANDING AT STAIR TOP**
SCALE: 1" = 1'-0"

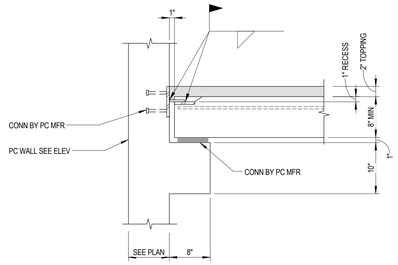

10 SF501 **STAIR END TO WALL CONNECTION**
SCALE: 1" = 1'-0"

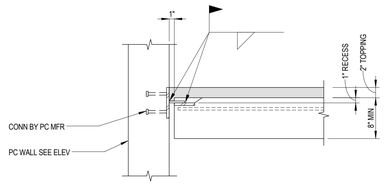

11 SF501 **STAIR SIDE TO WALL CONNECTION**
SCALE: 1" = 1'-0"

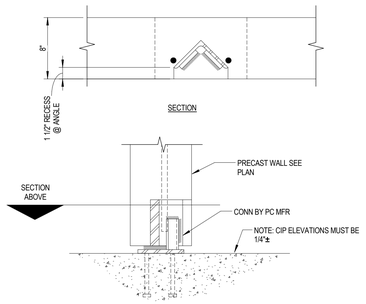

12 SF501 **PRECAST WALL TO CIP CONNECTION**
SCALE: 1 1/2" = 1'-0"

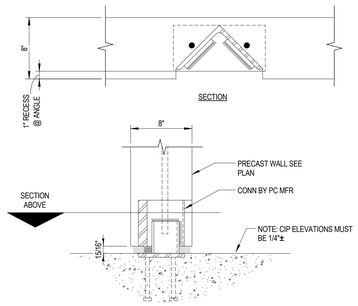

13 SF501 **ALTERNATE PRECAST WALL TO CIP CONNECTION**
SCALE: 1 1/2" = 1'-0"

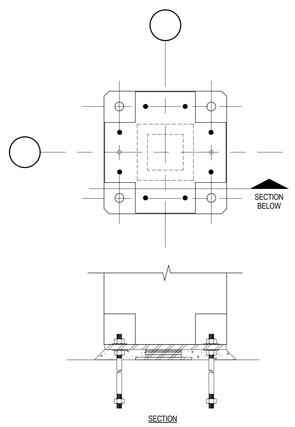

14 SF501 **PRECAST COLUMN BASE DETAIL**
SCALE: 1" = 1'-0"

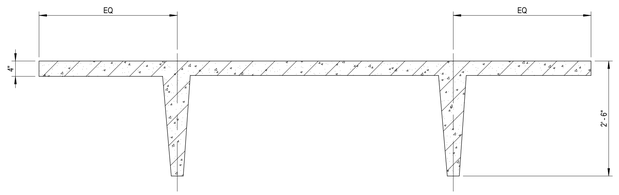

15 SF501 **TYPICAL PC PRE-TOPPED DOUBLE TEE**
SCALE: 3/4" = 1'-0"

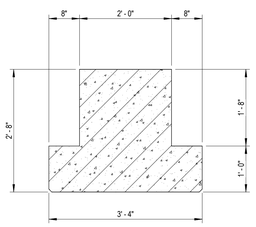

16 SF501 **TYPICAL PC INVERTED TEE BEAM**
SCALE: 3/4" = 1'-0"

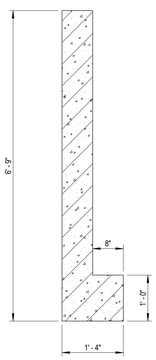

17 SF501 **TYPICAL PC SPANDREL BEAM**
SCALE: 3/4" = 1'-0"

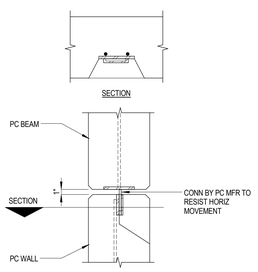

18 SF501 **TYPICAL PC BEAM ABOVE PC WALL DETAIL**
SCALE: 1" = 1'-0"

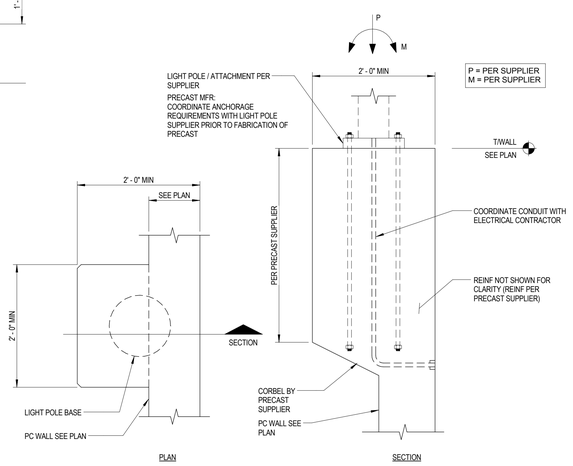

NOTE:
VERIFY LIGHT POLE BASE SIZE AND CONNECTION REQUIREMENTS WITH LIGHT POLE SUPPLIER

19 SF501 **TYPICAL LIGHT POLE BASE TO WALL DETAIL**
SCALE: 1" = 1'-0"

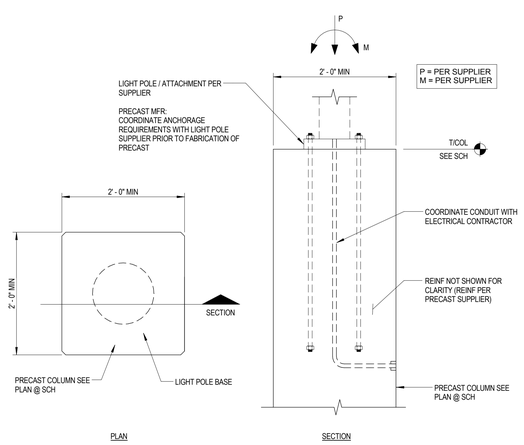

NOTE:
VERIFY LIGHT POLE BASE SIZE AND CONNECTION REQUIREMENTS WITH LIGHT POLE SUPPLIER

20 SF501 **TYPICAL LIGHT POLE BASE TO COLUMN DETAIL**
SCALE: 1" = 1'-0"

Revisions:	Date

VA | U.S. Department of Veterans Affairs

VAMC MILWAUKEE
5000 W. National Ave. Milwaukee, WI 53295

ARCHITECT/ENGINEERS:

PROJECT LEAD
Architect, Structural Engineer, Civil Engineer
GUIDON DESIGN
905 N. CAPITOL AVE. SUITE 100 INDIANAPOLIS, IN. 46204
317.800.6388 WWW.GUIDONDESIGN.COM
SUSTAINABLE ARCHITECTURE + ENGINEERING

MEP Engineer
APOGEE CONSULTING GROUP
7330 Chapel Hill Road, Suite 202
Raleigh, NC 27607
Tele: 757-663-8513

Functional Design
CARL WALKER INC.
11920 S. Highland Ave. Suite 2107
Lombard, IL 60148
Tele: 630-307-3800

BID SET

Drawing Title: TYPICAL PRECAST SECTIONS AND DETAILS	Project Title: PARKING STRUCTURE LOT 7	Project Number: 14.1020.02	OFFICE OF FACILITIES MANAGEMENT
		Building Number: #152	
Approved for Design Concept: FACILITY MANAGEMENT DIVISION MANAGER	Location: CLEMENT J ZABLOCKI VAMC	Drawing Number: SF501	VA Project Number: 695-324
	Date: 1 DEC 2015 / Checked By: MAV / Drawn By: WJT		VA | U.S. Department of Veterans Affairs

C:\Users\bthomas\Documents\14.1020.02-S-MVA-Garage_WJ\Thomas.rvt

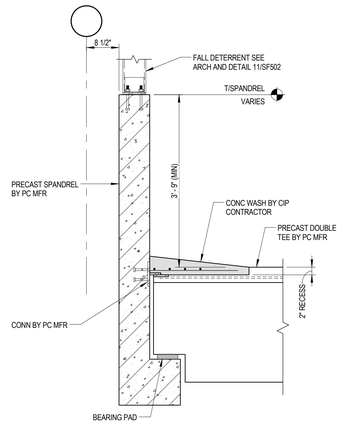

1 SF502 **DOUBLE TEE TO SPANDREL CONNECTION**
SCALE: 3/4" = 1'-0"

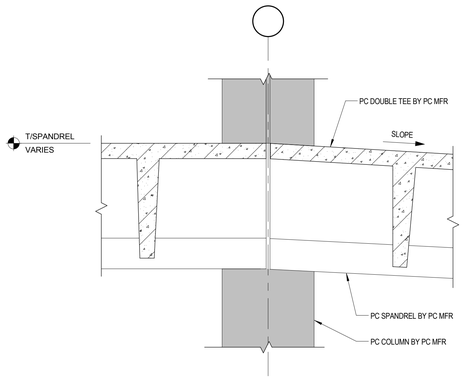

2 SF502 **SECTION**
SCALE: 3/4" = 1'-0"

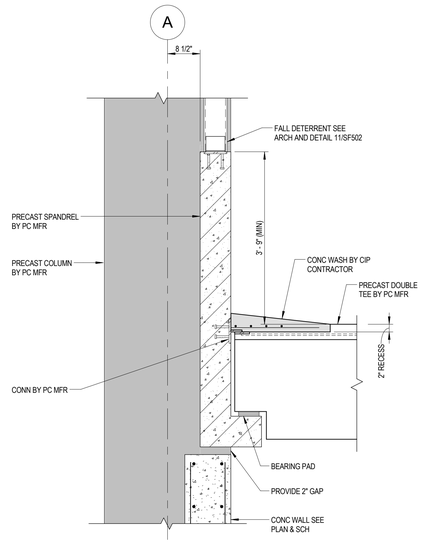

3 SF502 **SECTION**
SCALE: 3/4" = 1'-0"

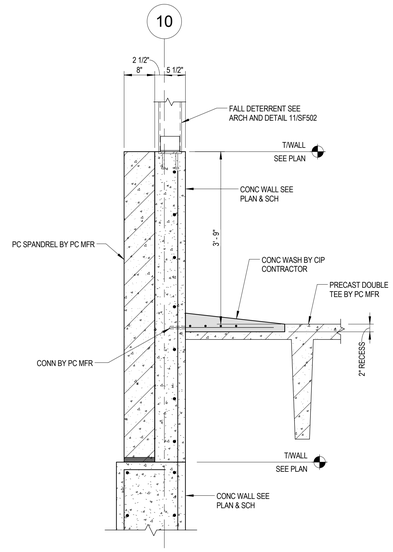

4 SF502 **SECTION**
SCALE: 3/4" = 1'-0"

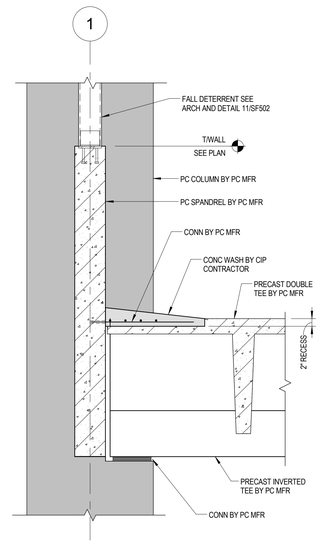

5 SF502 **SECTION**
SCALE: 3/4" = 1'-0"

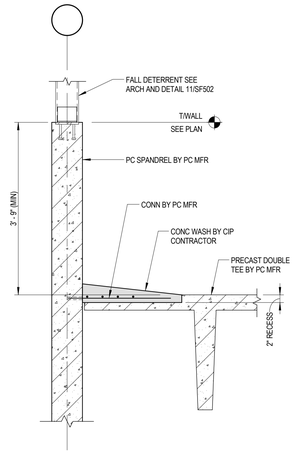

6 SF502 **SECTION**
SCALE: 3/4" = 1'-0"

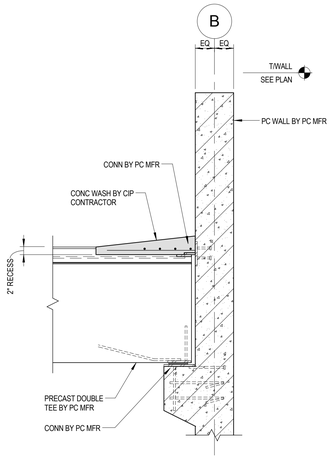

7 SF502 **SECTION**
SCALE: 3/4" = 1'-0"

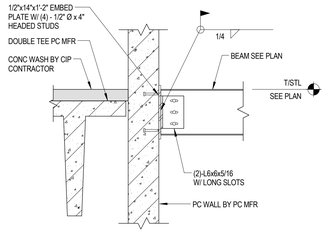

8 SF502 **SECTION**
SCALE: 3/4" = 1'-0"

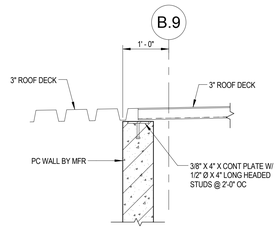

9 SF502 **SECTION**
SCALE: 3/4" = 1'-0"

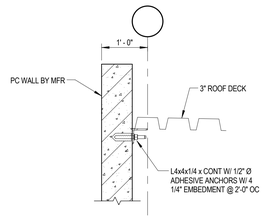

10 SF502 **SECTION**
SCALE: 3/4" = 1'-0"

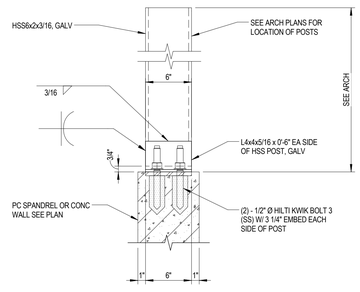

11 SF502 **TYPICAL BARRIER ANCHOR DETAIL**
SCALE: 1 1/2" = 1'-0"

C:\Users\bthomas\Documents\14.1020.02-S-MVA-Garage_WJ\Thomas.rvt

Revisions:	Date

VA | U.S. Department of Veterans Affairs

VAMC MILWAUKEE
5000 W. National Ave. Milwaukee, WI 53295

MARK A. VANDERHOUSE REGISTERED NO. 10809552 STATE OF INDIANA PROFESSIONAL ENGINEER

ARCHITECT/ENGINEERS:

PROJECT LEAD
Architect, Structural Engineer, Civil Engineer
GUIDON DESIGN
905 N. CAPITOL AVE. SUITE 100 INDIANAPOLIS, IN. 46204
317.800.6388 WWW.GUIDONDESIGN.COM
SUSTAINABLE ARCHITECTURE + ENGINEERING

MEP Engineer
APOGEE CONSULTING GROUP
7330 Chapel Hill Road, Suite 202
Raleigh, NC 27607
Tele: 757-663-8513

Functional Design
CARL WALKER INC.
11920 S. Highland Ave. Suite 2107
Lombard, IL 60148
Tele: 630-307-3800

BID SET

Drawing Title: FRAMING SECTIONS AND DETAILS	Project Title: PARKING STRUCTURE LOT 7	Project Number: 14.1020.02	OFFICE OF FACILITIES MANAGEMENT
		Building Number: #152	
Approved for Design Concept: FACILITY MANAGEMENT DIVISION MANAGER	Location: CLEMENT J ZABLOCKI VAMC	Drawing Number: SF502	VA Project Number: 695-324
	Date: 1 DEC 2015 / Checked By: MAV / Drawn By: WJT		VA | U.S. Department of Veterans Affairs

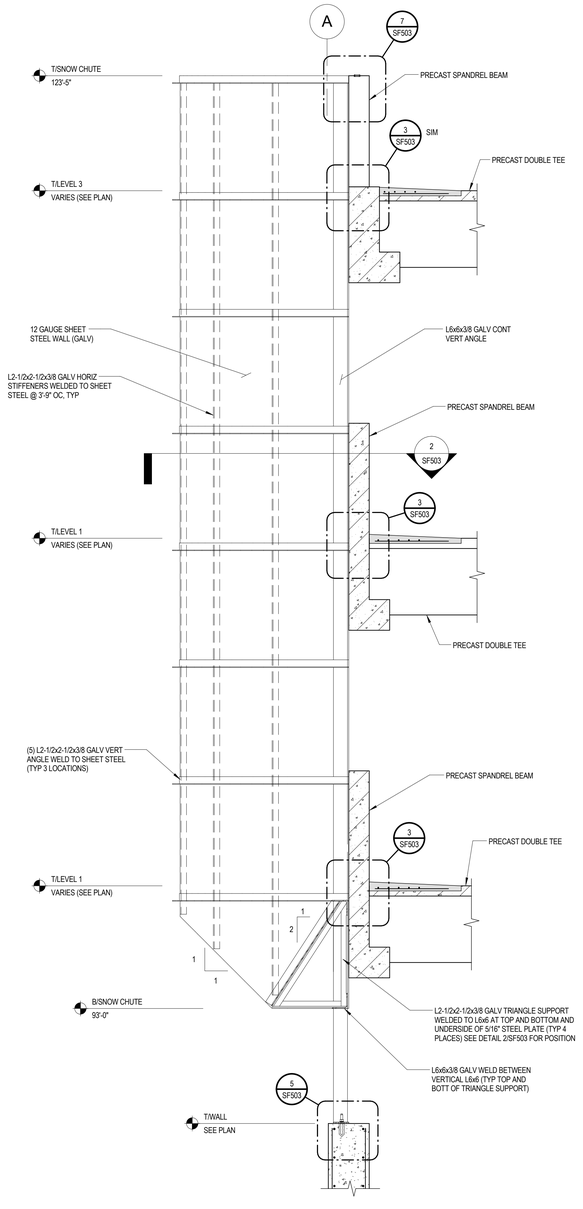

1 SF503 **SECTION**
SCALE: 1/2" = 1'-0"

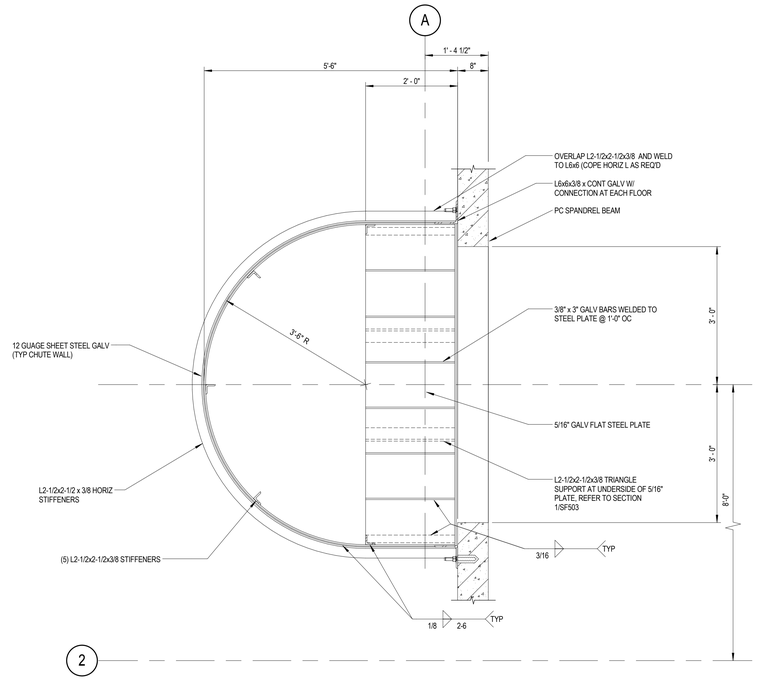

2 SF503 **SECTION**
SCALE: 3/4" = 1'-0"

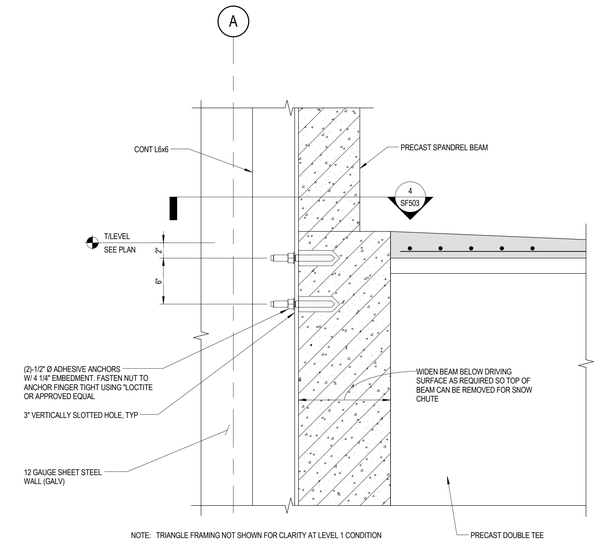

3 SF503 **DETAIL**
SCALE: 1 1/2" = 1'-0"

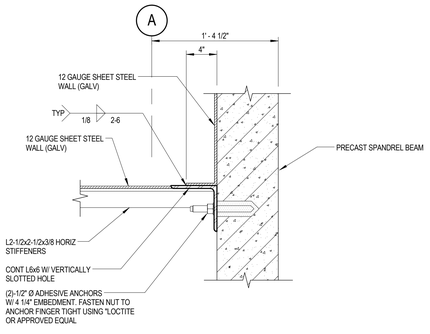

4 SF503 **SECTION**
SCALE: 1 1/2" = 1'-0"

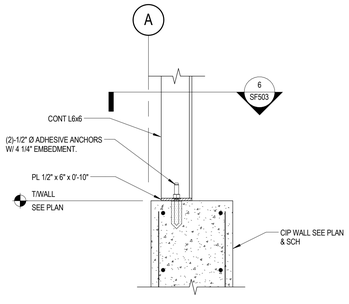

5 SF503 **DETAIL**
SCALE: 1" = 1'-0"

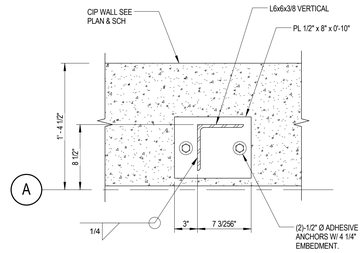

6 SF503 **SECTION**
SCALE: 1 1/2" = 1'-0"

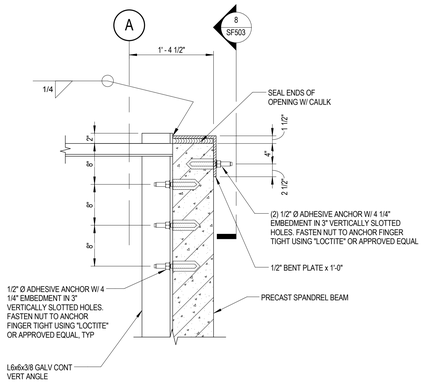

7 SF503 **DETAIL**
SCALE: 1" = 1'-0"

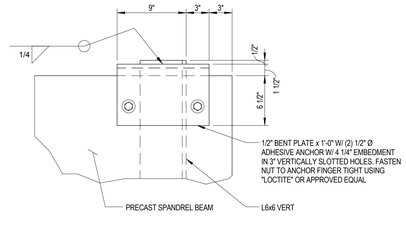

8 SF503 **SECTION**
SCALE: 1 1/2" = 1'-0"

Revisions:	Date

VA | U.S. Department of Veterans Affairs

VAMC MILWAUKEE
5000 W. National Ave. Milwaukee, WI 53295

MARK A. VANDERMUELEN REGISTERED NO. 10809552 STATE OF INDIANA PROFESSIONAL ENGINEER

ARCHITECT/ENGINEERS:

PROJECT LEAD
Architect, Structural Engineer, Civil Engineer
GUIDON DESIGN
905 N. CAPITOL AVE. SUITE 100 INDIANAPOLIS, IN. 46204
317.800.6388 WWW.GUIDONDESIGN.COM
SUSTAINABLE ARCHITECTURE + ENGINEERING

MEP Engineer
APOGEE CONSULTING GROUP
7330 Chapel Hill Road, Suite 202
Raleigh, NC 27607
Tele: 757-663-8513

Functional Design
CARL WALKER INC.
11920 S. Highland Ave. Suite 2107
Lombard, IL 60148
Tele: 630-307-3800

BID SET

Drawing Title	Project Title	Project Number	
FRAMING SECTIONS AND DETAILS	PARKING STRUCTURE LOT 7	14.1020.02	OFFICE OF FACILITIES MANAGEMENT
		Building Number #152	
Approved for Design Concept: FACILITY MANAGEMENT DIVISION MANAGER	Location CLEMENT J ZABLOCKI VAMC	Drawing Number	VA Project Number
	Date 1 DEC 2015 / Checked By: MAV / Drawn By: WJT	SF503	695-324

VA | U.S. Department of Veterans Affairs

C:\Users\bthomas\Documents\14.1020.02-S-MVA-Garage_WJThomas.rvt

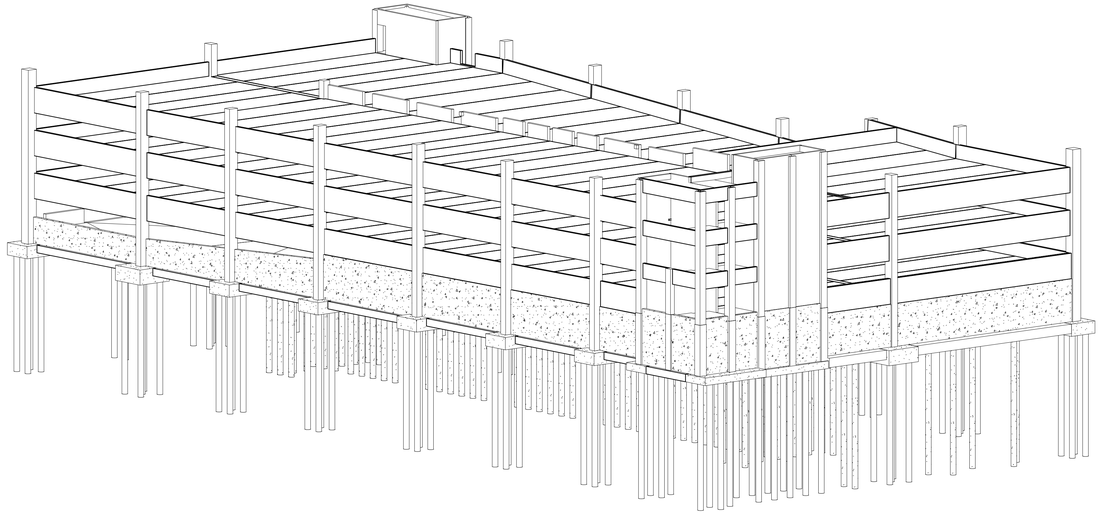

1 SF901 **SOUTHEAST ISOMETRIC**
NO SCALE

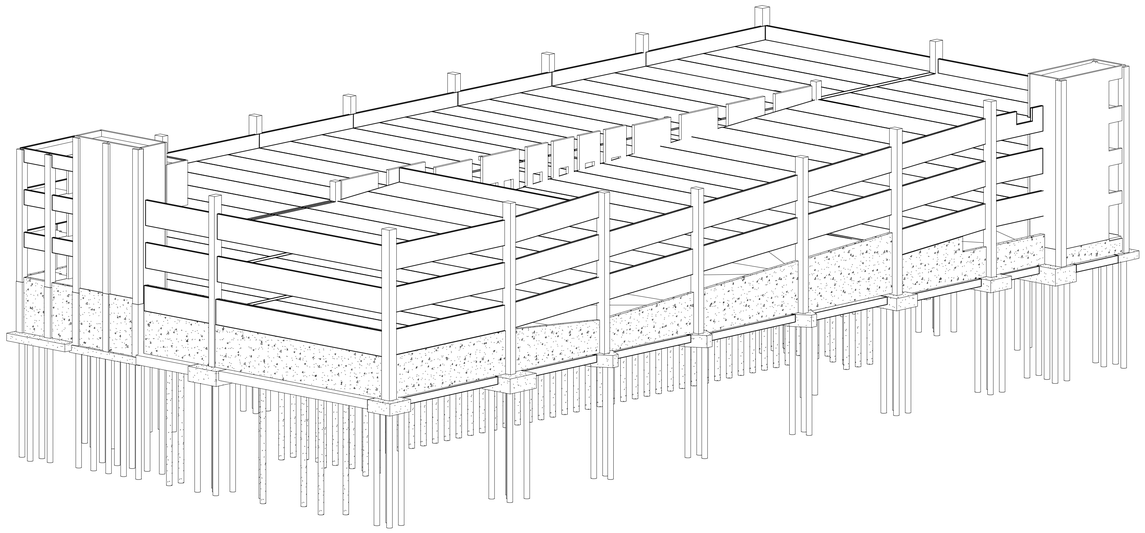

2 SF901 **NORTHEAST ISOMETRIC**
NO SCALE

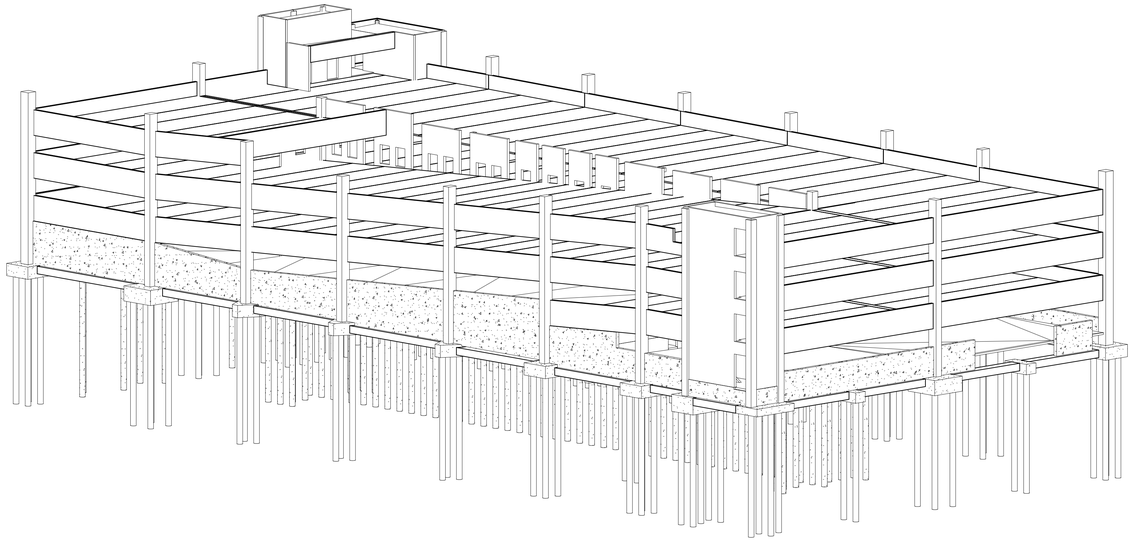

3 SF901 **NORTHWEST ISOMETRIC**
NO SCALE

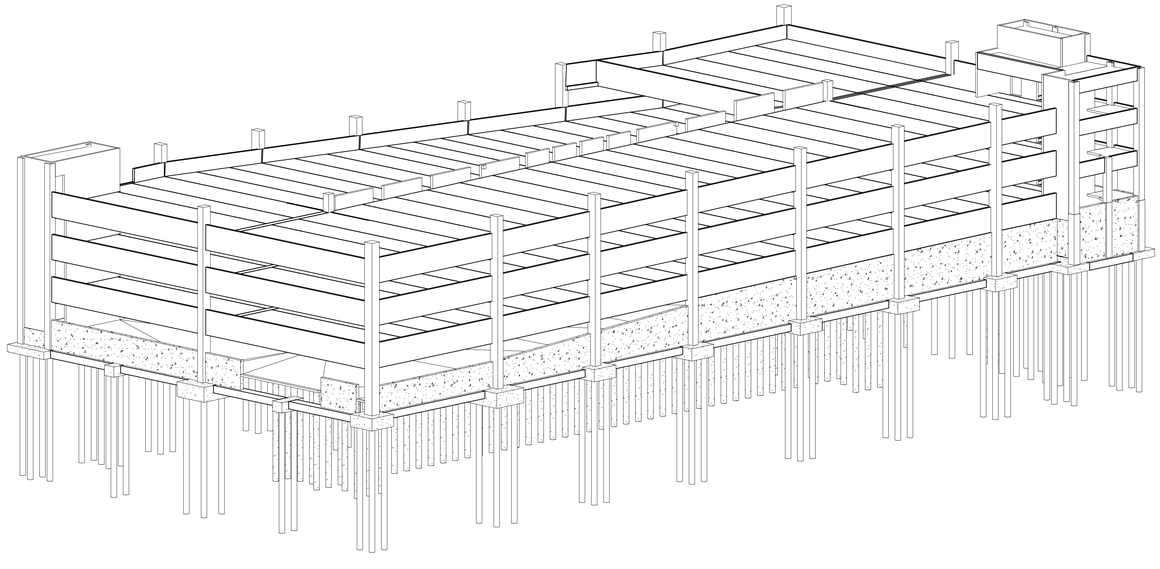

4 SF901 **SOUTHWEST ISOMETRIC**
NO SCALE

Revisions:	Date

VA | U.S. Department of Veterans Affairs

VAMC MILWAUKEE
5000 W. National Ave. Milwaukee, WI 53295

MARK A. VANDERMUELEN
REGISTERED
NO. 10809552
STATE OF INDIANA
PROFESSIONAL ARCHITECT

ARCHITECT/ENGINEERS:

PROJECT LEAD
Architect, Structural Engineer, Civil Engineer
GUIDON DESIGN
905 N. CAPITOL AVE. SUITE 100 INDIANAPOLIS, IN. 46204
317.800.6388 WWW.GUIDONDESIGN.COM
SUSTAINABLE ARCHITECTURE + ENGINEERING

MEP Engineer
APOGEE CONSULTING GROUP
7330 Chapel Hill Road, Suite 202
Raleigh, NC 27607
Tele: 757-663-8513

Functional Design
CARL WALKER INC.
11920 S. Highland Ave. Suite 2107
Lombard, IL 60148
Tele: 630-307-3800

BID SET

Drawing Title: ISOMETRICS	Project Title: PARKING STRUCTURE LOT 7	Project Number: 14.1020.02 / Building Number: #152	OFFICE OF FACILITIES MANAGEMENT
Approved for Design Concept: FACILITY MANAGEMENT DIVISION MANAGER	Location: CLEMENT J ZABLOCKI VAMC	Drawing Number: SF901	VA Project Number: 695-324
	Date: 1 DEC 2015 / Checked By: MAV / Drawn By: WJT		VA U.S. Department of Veterans Affairs

C:\Users\bthomas\Documents\14.1020.02-S-MVA-Garage_WJThomas.rvt

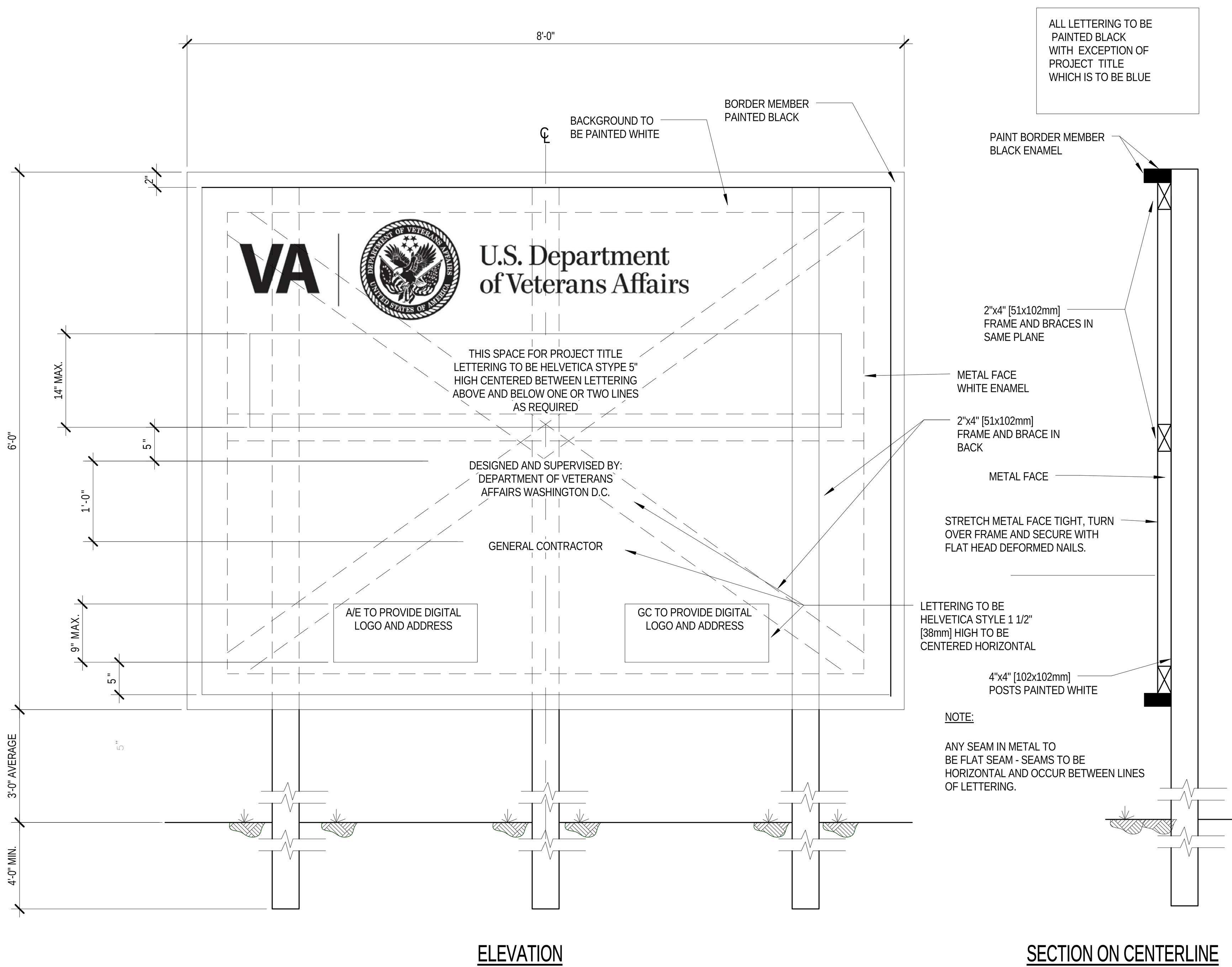

1 AS001 CONSTRUCTION SIGN
SCALE: 1" = 1'-0"

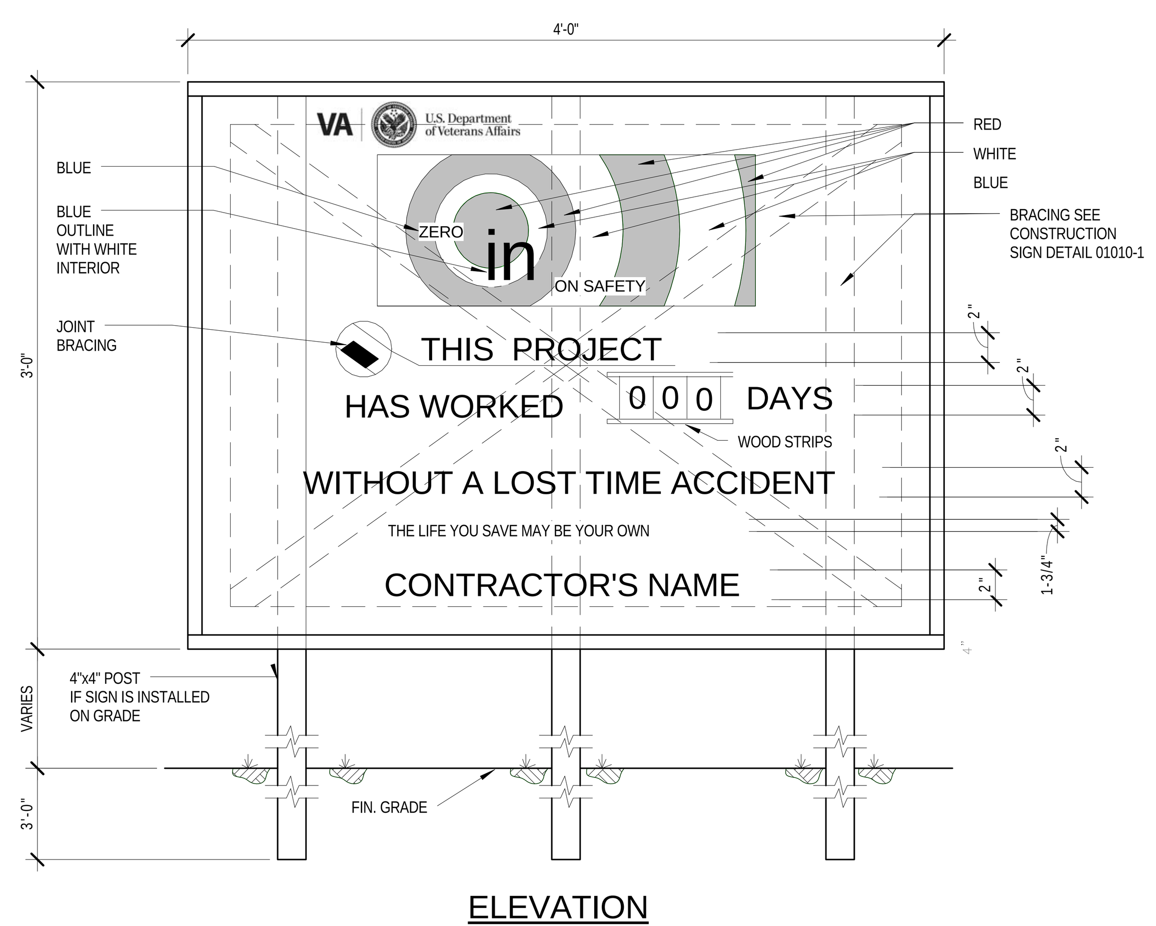

2 AS001 SAFETY SIGN
SCALE: 1 1/2" = 1'-0"

PROJECT GENERAL NOTES

1. ATTENTION ALL USERS OF THESE DRAWINGS, GENERAL CONTRACTORS, SUB CONTRACTORS, MANUFACTURERS, SUPPLIERS: CAREFULLY AND THOROUGHLY REVIEW THESE GENERAL NOTES. IT IS YOUR RESPONSIBILITY TO KNOW AND ADHERE TO THESE REQUIREMENTS.
2. DO NOT PRESUME THAT YOUR SCOPE OF WORK IS SINGULARLY DEFINED. YOUR SCOPE OF WORK IS DEFINED THROUGHOUT THE ENTIRE SET OF DRAWINGS AND SPECIFICATIONS AND IS NOT CONTAINED IN JUST ONE SERIES OF DRAWINGS OR DIVISION OF SPECIFICATIONS. YOU MUST REVIEW THE ENTIRE SET OF CONTRACT DOCUMENTS TO DETERMINE YOUR SCOPE OF WORK.
3. EVERY EFFORT HAS BEEN MADE TO MAKE THESE DOCUMENTS CONCISE AND COORDINATED, TO DEFINE WORK IN THE MOST LOGICAL PLACE AND TO ELIMINATE REDUNDANCY. KEEP IN MIND HOWEVER THAT YOUR SCOPE OF WORK CAN BE CONTAINED IN VARIOUS PLACES, WITH VARYING DESCRIPTIONS. DO NOT CONSIDER THAT THERE IS ONE CUSTOMARY PLACE TO LOCATE YOUR WORK. THERE IS A DANGER OF OMITTING WORK FROM YOUR SCOPE BECAUSE THE ENTIRE SET OF DOCUMENTS WAS NOT REVIEWED.
4. MECHANICAL AND ELECTRICAL DRAWINGS SHOW INFORMATION IN A DIAGRAMMATIC FASHION WITHOUT DIMENSIONING. THE GENERAL CONTRACTOR IS TO COORDINATE THE LOCATIONS OF ALL MECHANICAL AND ELECTRICAL EQUIPMENT WITH RESPECT TO THE ARCHITECTURAL AND STRUCTURAL DETAILING OF SHAFTS, CHASES, AND SUCH.
5. THE CONTRACTOR SHALL VISIT THE SITE AND BECOME FAMILIAR WITH SITE CONDITIONS AS THEY MAY AFFECT CARRYING OUT THE WORK AS DESCRIBED IN THESE CONTRACT DOCUMENTS. THE CONTRACTOR SHALL INVESTIGATE, VERIFY, AND BE RESPONSIBLE FOR ALL CONDITIONS OF THE PROJECT, AND NOTIFY THE ARCHITECT OF ANY CONDITIONS THAT REQUIRE MODIFICATION BEFORE PROCEEDING WITH THE WORK.
6. THE CONTRACTOR SHALL PROVIDE ALL MATERIALS, EQUIPMENT, LABOR, AND SERVICES NECESSARY TO COMPLETE THE WORK.
7. ALL PERSONS DIRECTLY OR INDIRECTLY ASSOCIATED WITH THE PROJECT SHALL BE FAMILIAR WITH THE RULES AND REGULATIONS OF THE OCCUPATIONAL SAFETY AND HEALTH ACT, AND IMPLEMENT THOSE RULES AS THEY APPLY TO THIS PROJECT.
8. ALL WORK PERFORMED SHALL BE IN ACCORDANCE WITH THE BUILDING CODES AS NOTED ON CODE SHEETS.
9. CONTRACTOR SHALL SUBMIT CONFORMATION OF ORDERED MATERIALS OR ITEMS NECESSARY TO COMPLETE THE PROJECT WITH PROJECTED DELIVERY DATE GREATER THAN FOUR WEEKS.
10. ALL SUBCONTRACTORS SHALL SUBMIT SHOP DRAWINGS AS REQUIRED FOR APPROVAL PRIOR TO COMMENCING ANY WORK.
11. THE GENERAL CONTRACTOR SHALL BE RESPONSIBLE FOR THE COORDINATION OF ALL TRADES AND THE PREVENTION OF CONFLICT AMONG ALL TRADES.
12. THE GENERAL CONTRACTOR SHALL BE RESPONSIBLE FOR LOCATING AND PROTECTING ALL UTILITY LINES. LOCATIONS SHOWN ARE APPROXIMATE. REPAIR ALL DAMAGE TO UTILITY LINES CAUSED BY CONSTRUCTION OPERATIONS AT NO COST TO THE OWNER.
13. PROVIDE SEALANT AT ALL JOINTS OR CRACKS THAT OCCUR WHERE DISSIMILAR MATERIALS INTERSECT PERPENDICULAR TO EACH OTHER, AND THE INTERSECTION IS EXPOSED TO VIEW, UNLESS INDICATED OTHERWISE ON THE DRAWINGS.
14. ALL PENETRATIONS AT SMOKE AND FIRE RATED WALLS, FLOORS, OR CEILINGS, SHALL BE PROTECTED, SEALED OR DAMPERED USING ONLY U.L. AND/OR I.C.B.O. APPROVED METHODS, MATERIALS AND INSTALLATION.
15. CONTRACTOR SHALL TAKE CARE TO MAINTAIN EXISTING FIRE PROTECTION SYSTEMS. REPLACE FIRE-PROOFING AND SEALANTS TO ORIGINAL STATE WHERE DISTURBED BY CONSTRUCTION AND WHERE CONNECTIONS OF NEW CONSTRUCTION MUST INTERFACE WITH EXISTING PROTECTED STRUCTURAL MEMBERS OR BUILDING COMPONENTS.
15. PAINT ALL EXPOSED STEEL UNLESS NOTED OTHERWISE.
16. CONTRACTOR SHALL BE RESPONSIBLE FOR ALL TEMPORARY BRACING AND SHORING REQUIRED DURING CONSTRUCTION.
17. ALL WORK AND MATERIAL SHALL BE REGARDED AS NEW UNLESS SPECIFICALLY INDICATED AS “EXISTING” OR “(E)” ON THE DRAWINGS AND DESCRIBED WITHIN THE SPECIFICATIONS.
18. TYPICAL DETAILS MAY NOT NECESSARILY BE REFERENCED ON THE DRAWINGS, BUT APPLY UNLESS NOTED OTHERWISE.
19. SECURITY AND SAFETY ARE THE CONTRACTOR'S RESPONSIBILITY. COORDINATE WITH CONTRACTING OFFICER'S REPRESENTATIVE.

DRAWINGS AND DIMENSIONS

1. THE CONTRACT DOCUMENT DRAWINGS HAVE BEEN PREPARED USING REVIT® SOFTWARE IN A MICROSOFT WINDOWS ENVIRONMENT. A BUILDING INFORMATION MODEL (BIM) WAS DEVELOPED SOLELY TO COMMUNICATE THE DESIGN TO THE OWNER AND IS NOT SUITABLE FOR ANY OTHER PURPOSE. FOR EXAMPLE THE REVIT MODEL IS NOT SUITABLE FOR COST ESTIMATING, SYSTEMS PERFORMANCE, COORDINATION, SCHEDULING, OR FACILITIES MANAGEMENT.
2. THESE DOCUMENTS WERE PRODUCED USING THE CONSTRUCTION SPECIFICATIONS INSTITUTE'S UNIFORM DRAWING SYSTEM AND THE NATIONAL CAD STANDARD AS GUIDES.
3. ANY INDICATION OF PROJECT LIMITS OR LINES OF DEMARCATION ARE SHOWN FOR THE CONVENIENCE OF THE CONTRACTOR, AND ARE NOT TO BE TAKEN LITERALLY. ACTUAL CONTRACT LIMITS ARE TO BE DETERMINED BY THE CONTRACTOR AND APPROVED BY THE OWNER BEFORE ACTUAL CONSTRUCTION WORK BEGINS.
4. DRAWINGS ARE PREPARED USING DIMENSIONS AND PRODUCT CONFIGURATIONS OR DETAILS OF SPECIFIC MANUFACTURERS. DIMENSIONS AND DETAILS FOR SPECIFIC PRODUCTS MAY CHANGE BEFORE THEY ARE ACTUALLY INCORPORATED INTO THE WORK, AND PRODUCTS BY OTHER MANUFACTURERS ARE ALSO ACCEPTABLE. THEREFORE, ACTUAL INSTALLATION DETAILS AND DIMENSIONS MAY DIFFER FROM THOSE SHOWN. CONTRACTOR SHALL VERIFY INSTALLATION REQUIREMENTS FOR ALL PRODUCTS TO BE INCORPORATED IN THE WORK (INCLUDING THICKNESSES FOR RECESSED OR SEMI-RECESSED PRODUCTS), AND IS RESPONSIBLE FOR ACCOMMODATING AND COORDINATING CHANGES TO OTHER MATERIALS OR PRODUCTS THAT ARE NECESSARY BECAUSE OF THESE DIFFERENCES.
5. THE DRAWINGS AND SPECIFICATIONS ARE SEPARATED INTO DISCIPLINES FOR CONVENIENCE. THE SEPARATIONS USED ARE USED ONLY FOR THE PURPOSES OF CONVENIENCE AND REFERENCE AND IN NO WAY DO THEY DEFINE OR LIMIT THE SCOPE OR INTENT OF ANY PART OF THE DRAWINGS, OR OF THE DRAWINGS AND SPECIFICATIONS AS A WHOLE. THE FACT THAT THE DRAWINGS ARE SEPARATED IN NO WAY SUGGESTS THAT THE WORK IS NOT TO BE CONSTRUCTED AS A COMPLETE, INTEGRATED AND UNIFIED WHOLE.
6. THE DRAWINGS AND SPECIFICATIONS, INCLUDING DRAWINGS PREPARED BY SPECIFIC ENGINEERING DISCIPLINES (SUCH AS CIVIL, STRUCTURAL, MECHANICAL, ELECTRICAL, ETC.) ARE COMPLEMENTARY; ITEMS SHOWN IN ANY ONE LOCATION IN THE DRAWINGS SHALL BE CONSIDERED TO BE REQUIREMENTS OF THE CONTRACT FOR CONSTRUCTION. IN THE EVENT OF AN INCONSISTENCY BETWEEN THE DRAWINGS AND SPECIFICATIONS, OR WITHIN EITHER DOCUMENT, THE CONTRACTOR SHALL SEEK CLARIFICATION OR INTERPRETATION FROM THE ARCHITECT PRIOR TO BIDDING. WHERE INCONSISTENCIES ARE NOT CLARIFIED PRIOR TO BIDDING, AND WHERE THE ACTUAL SOLUTION OR INTENT CANNOT BE REASONABLY INFERRED, THE CONTRACTOR SHALL PROVIDE THE BETTER QUALITY OR GREATER QUANTITY OF WORK.
7. USE OF THE WORD "VERIFY" POINTS OUT A SITUATION WHICH MUST BE CONFIRMED PRIOR TO PROCEEDING WITH THE WORK, FABRICATION OF EQUIPMENT, OR ORDERING MATERIAL. NOTIFY THE ARCHITECT OF ANY DISCREPANCY DISCOVERED.
8. THE GENERAL CONTRACTOR SHALL BE RESPONSIBLE FOR NOTIFYING THE ARCHITECT IMMEDIATELY SHOULD ANY DISCREPANCIES BE FOUND IN THE DRAWINGS AND SPECIFICATIONS.
9. THE GENERAL CONTRACTOR IS RESPONSIBLE FOR CHECKING ALL FIELD CONDITIONS AND DIMENSIONS AS THEY RELATE TO THIS PROJECT. SHOULD DISCREPANCIES EXIST BETWEEN THE WORK INDICATED AND ACTUAL FIELD CONDITIONS NOTIFY THE ARCHITECT PRIOR TO PROCEEDING WITH THE WORK.
10. DO NOT SCALE THE DRAWINGS. DRAWING SCALES AS INDICATED ARE FOR REFERENCE ONLY AND ARE NOT INTENDED TO ACCURATELY DEPICT ACTUAL OR DESIGNATED CONDITIONS. WRITTEN DIMENSIONS SHALL GOVERN.
11. ALL DIMENSIONS INDICATED ARE TO FACES OF STRUCTURAL MATERIALS OR COLUMN GRID LINES UNLESS NOTED OTHERWISE. ROUGH OPENINGS SHALL ALLOW FOR SHIM SPACE.
12. THE TERM "ALIGN" REFERS TO LOCATING DIFFERENT COMPONENTS OF CONSTRUCTION TO PROVIDE A FLUSH FINISH SURFACE.
13. SHOULD DIMENSIONS BE MISSING OR CONFLICTING, NOTIFY ARCHITECT PRIOR TO PROCEEDING WITH RELATED WORK.

ARCHITECTURAL ABBREVIATIONS

A/C	AIR CONDITIONING
ACOUS	ACOUSTICAL
ACT	ACOUSTICAL CEILING TILE
AD	AREA DRAIN
ADA	AMERICANS WITH DISABILITIES ACT
A&E	ARCHITECT AND ENGINEERS
AFF	ABOVE FINISH FLOOR
AFG	ABOVE FINISHED GRADE
AHJ	AUTHORITIES HAVING JURISDICTION
AHU	AIR HANDLING UNIT
ALT	ALTERNATIVE
ALT TRANS	ALTERNATIVE TRANSPORTATION
ALUM	ALUMINUM
ANOD	ANODIZED
APPROX	APPROXIMATE
ARCH	ARCHITECTURAL
AVG	AVERAGE
BB	BULLETIN BOARD
BD	BOARD
BG	BUMPER GUARD
BLDG	BUILDING
BLKG	BLOCKING
BM	BEAM
BO	BOTTOM OF
BRG	BEARING
CB	CATCH BASIN
CBB	CEMENTITIOUS BACKER BOARD
CER	CERAMIC
CF	CUBIC FEET
CFCI	CONTRACTOR FURNISH CONTRACTOR INSTALL
CFM	CUBIC FEET PER MINUTE
CG	CORNER GUARD, CEILING GRILLE
C & G	CURB & GUTTER
CI	CAST IRON
CIP	CAST IN PLACE
CJ	CONTROL JOINT
CL	CENTERLINE
CLG	CEILING
CMP	CORRUGATED METAL PIPE
CMU	CONCRETE MASONRY UNITS
CO	CLEANOUT(S)
COL	COLUMN
CONC	CONCRETE
CONT	CONTINUOUS
COORD	COORDINATE
CP	CONCRETE PIPE
CPT	CARPET
CRS	COLD ROLLED STEEL
CS	CAST STONE
CSB	CONCRETE SPLASH BLOCK
CSI	CONSTRUCTION SPECIFICATIONS INSTITUTE
CT	CERAMIC TILE
CTR	CENTER
CU FT	CUBIC FEET
CUH	CABINET UNIT HEATER
CY	CUBIC YARD
D	DRYER
DEG	DEGREE
DEMO	DEMOLITION
DEPT	DEPARTMENT
DET	DETAIL
DF	DRINKING FOUNTAIN
DIA	DIAMETER
DIAG	DIAGONAL
DISP	DISPENSER
DIV	DIVISION
DN	DOWN
DR	DOOR
DS	DOWNSPOUT
DW	DISHWASHER
DWG	DRAWING
E	EAST
(E)	EXISTING
EA	EACH
EF	EXHAUST FAN
EIFS	EXTERIOR INSULATION AND FINISH SYSTEM
EJ	EXPANSION JOINT
EL	ELEVATION
ELEC	ELECTRICAL
ELEV	ELEVATOR
EQ	EQUAL
EQUIP	EQUIPMENT
EST	ESTIMATED
ETS	EXPOSED TO STRUCTURE
EWC	ELECTRIC WATER COOLER
EXH	EXHAUST
EXIST	EXISTING
EXP	EXPANSION
EXT	EXTERIOR
FA	FIRE ALARM
FAAP	FIRE ALARM ANNUNCIATOR PANEL
FACP	FIRE ALARM CONTROL PANEL
FCU	FAN COIL UNIT
FD	FLOOR DRAIN
FDN	FOUNDATION
FE	FIRE EXTINGUISHER
FEC	FIRE EXTINGUISHER CABINET
FF	FINISH FLOOR
FF & E	FURNITURE FIXTURES & EQUIPMENT
FIN	FINISH
FIXT	FIXTURE
FL	FLOW LINE
FLR	FLOOR
FLUOR	FLUORESCENT
FO	FINISH OPENING
FOS	FACE OF STUD
FR	FIRE RATED
FSP	FIRE STANDPIPE
FT	FOOT / FEET
FTG	FOOTING
FURR	FURRING
FV	FIELD VERIFY
FVC	FIRE VALVE CABINET
FWC	FABRIC WALLCOVERING
GA	GAUGE
GALV	GALVANIZED
GB	GRAB BAR
GC	GENERAL CONTRACTOR
GD	GARBAGE DISPOSAL
GF CMU	GROUND FACE CMU
GFCI	GROUND FAULT CIRCUIT INTERRUPTER
GI	GALVANIZED IRON
GL	GLASS
GL BLK	GLASS BLACK
GLU LAM	GLUE LAMINATED WOOD
GND	GROUND
GT	GROUT
GYP BD	GYPSUM BOARD
HAZ MAT	HAZARDOUS MATERIALS
HB	HOSE BIB
HC	HOLLOW CORE
HCP	HANDICAPPED
HDR	HEADER
HDW	HARDWARE
HDWD	HARDWOOD
HGT	HEIGHT
HM	HOLLOW METAL
HORIZ	HORIZONTAL
HR	HOUR, HANDRAIL
HT	HEIGHT
HVAC	HEATING, VENTILATING & AIR CONDITIONING
IBC	INTERNATIONAL BUILDING CODE
ID	INSIDE DIAMETER
IG	INSULATING GLASS
IN	INCH
INCAN	INCANDESCENT
INFO	INFORMATION
INSUL	INSULATION
INT	INTERIOR
INV	INVERT
ITG	INSULATED TEMPERED GLASS
JAN	JANITOR
J-BOX	JUNCTION BOX
JT	JOINT
L	LONG
LAV	LAVATORY
LB(S) #	POUND(S)
LF	LINEAL FEET
LLV	LONG LEG VERTICAL
LT	LIGHT
LVR	LOUVER
M & BH	MOP AND BROOM HOLDER
MAINT	MAINTENANCE
MATL	MATERIAL
MAX	MAXIMUM
MB	MARKER BOARD
MECH	MECHANICAL
MEPF	MECHANICAL, ELECTRICAL, PLUMBING, FIRE PROTECTION (CONDUIT)
MFR	MANUFACTURER
MH	MANHOLE
MIN	MINIMUM
MIRR	MIRROR
MISC	MISCELLANEOUS
MO	MASONRY OPENING
MSB	MOP SERVICE BASIN
MTD	MOUNTED
MTL	METAL
N	NORTH
NA	NOT APPLICABLE
NECY	NECESSARY
NIC	NOT IN CONTRACT
NO	NUMBER
NOM	NOMINAL
NTS	NOT TO SCALE
OC	ON CENTER
OD	OUTSIDE DIAMETER, OVERFLOW DRAIN
OFCI	OWNER FURNISHED CONTRACTOR INSTALLED
OFOI	OWNER FURNISHED OWNER INSTALLED
OH	OPPOSITE HAND
OPN	OPENING
OPP	OPPOSITE
ORD	OVERFLOW ROOF DRAIN
P	PLASTIC
PARTN	PARTITION
PBD	PARTICLE BOARD
PCC	PRECAST CONCRETE
PL	PLATE
PLAM	PLASTIC LAMINATE
PLAS	PLASTER
PLYWD	PLYWOOD
PR	PAIR
PRCST	PRECAST
PREFAB	PREFABRICATED
PROP	PROPERTY
PROP	PROPERTY
PSF	POUNDS PER SQUARE FOOT
PSI	POUNDS PER SQUARE INCH
PT	PAINT
PT CONC	POST-TENSIONED CONCRETE
PTD	PAPER TOWEL DISPENSER
PTL	PORCELAIN TILE
PVC	POLYVINYL CHLORIDE
QA	QUALITY ASSURANCE
QT	QUARRY TILE
R	R-VALUE (INSULATION), RADIUS, RISER
RB	RESILIENT BASE
RCP	REFLECTED CEILING PLAN
RD	ROOF DRAIN
RE:	REFERENCE
REBAR	REINFORCING BAR
REC	RECESSED
RECPT	RECEPTACLE
REF	REFRIGERATOR
REG	REGISTER
REINF	REINFORCE
REQD	REQUIRED
RESIL	RESILIENT
REV	REVISION
RH	ROOF HATCH
RM	ROOM
RO	ROUGH OPENING
RT	RUBBER STAIR TREAD
S	SOUTH
SAF	SEAMLESS ACRYLIC FLOORING
SAP	SUSPENDED ACOUSTICAL PANELS
SAT	SUSPENDED ACOUSTICAL TILE
SB	SPLASHBLOCK
SC	SEALED CONCRETE, SOLID CORE
SCHED	SCHEDULE
SCP	SCUPPER
SD	SOAP DISPENSER
SEAL	SEALER
SECT	SECTION
SECT	SECTION
SF	SQUARE FOOT
SF CMU	SPLIT-FACE CMU
SHR	SHOWER
SHT	SHEET
SHTG	SHEATHING
SIM	SIMILAR
SL	SLOPE
SLV	SHORT LEG VERTICAL
SND	SANITARY NAPKIN DISPOSER
SNV	SANITARY NAPKIN VENDOR
SPECS	SPECIFICATIONS
SQ	SQUARE
SS	STAINLESS STEEL
STC	SOUND TRANSMISSION CLASS
STD	STANDARD
STL	STEEL
STOR	STORAGE
STRUC	STRUCTURAL
SUSP	SUSPENDED
SV	SHEET VINYL
SYM	SYMMETRICAL
SYS	SYSTEM
T	TREAD
TB	TACKBOARD
T&B	TOP AND BOTTOM
T&G	TONGUE AND GROOVE
TBD	TO BE DETERMINED
TD	TUBULAR DAYLIGHTING DEVICE
TEL	TELEPHONE
TEMP	TEMPERATURE
TG	TEMPERED GLASS, TONGUE & GROOVE, TRANSFER GRILLE
THRU	THROUGH
TO	TOP OF
TOC	TOP OF CONCRETE
TOM	TOP OF MASONRY
TOS	TOP OF STEEL
TOW	TOP OF WALL
TTD	TOILET TISSUE DISPENSER
TV	TELEVISION
TYP	TYPICAL
UGND	UNDERGROUND
UL	UNDERWRITERS LABORATORY
UNFIN	UNFINISHED
UNO	UNLESS NOTED OTHERWISE
URN	URINAL
VB	VINYL BASE
VCT	VINYL COMPOSITION TILE
VERT	VERTICAL
VIF	VERIFY IN FIELD
VTR	VENT THROUGH ROOF
VWC	VINYL WALL COVERING
W	WEST
W/	WITH
W/O	WITHOUT
WC	WATER CLOSET
WD	WOOD
WDP	WOOD PANELING
WDW	WINDOW
WF	WIDE FLANGE
WGL	WIRED GLASS
WH	WATER HEATER
WR	WASTE RECEPTACLE, WATER RESISTANT
WS	WATER STOP
WSCT	WAINSCOTT
WT	WEIGHT
WWF	WELDED WIRE FABRIC

WALL TYPE LEGEND

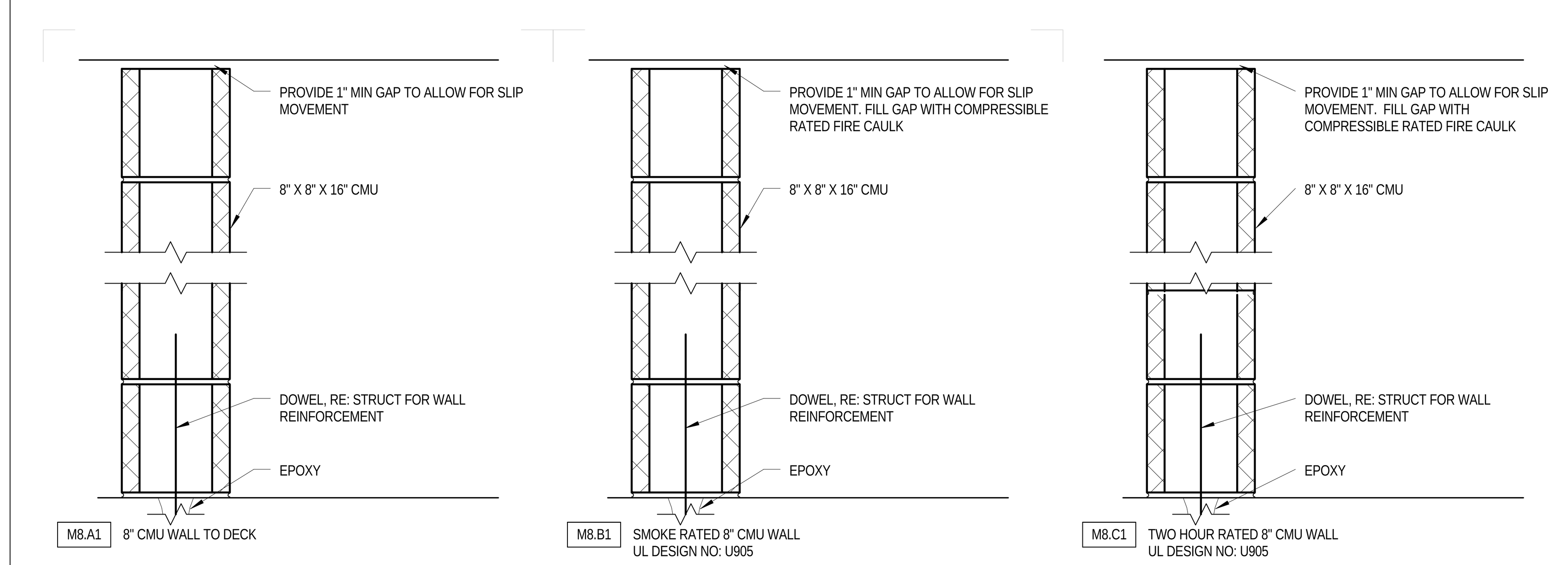

ARCHITECTURAL SYMBOLS

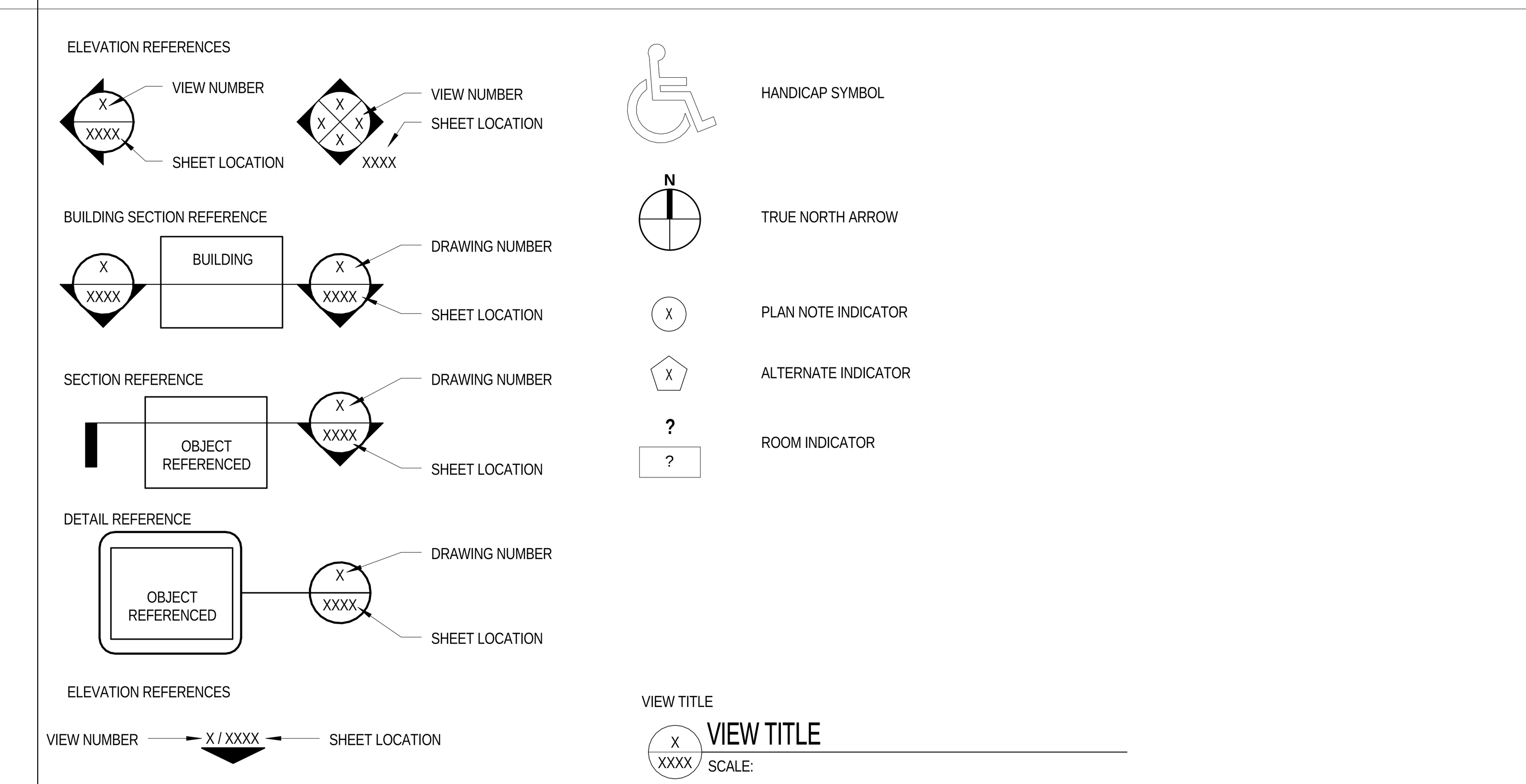

BID SET

Revisions:	Date

VA U.S. Department of Veterans Affairs
VAMC MILWAUKEE
5000 W. National Ave. Milwaukee, WI 53295

ARCHITECT/ENGINEERS:

PROJECT LEAD
Architect, Structural Engineer, Civil Engineer
GUIDON DESIGN
905 N. CAPITOL AVE. SUITE 100 INDIANAPOLIS, IN. 46204
317.800.6388 WWW.GUIDONDESIGN.COM
SUSTAINABLE ARCHITECTURE + ENGINEERING

MEP Engineer
APOGEE CONSULTING GROUP
1151 Kildaire Farm Rd.
Suite 120
Cary, NC 27511
Tele: 919-858-7420

Parking Consultant
CARL WALKER INC.
11920 S. Highland Ave.
Suite 2107
Lombard, IL 60148
Tele: 630-307-3800

Drawing Title	ABBREVIATIONS AND SYMBOLS - SIGNAGE
Approved for Design Concept:	FACILITY MANAGEMENT DIVISION MANAGER
Project Title	PARKING STRUCTURE - LOT 7
Location	CLEMENT J ZABLOCKI VAMC
Date	1 DEC 2015
Checked By:	LL
Drawn By:	EA
A/E Project Number	14.1020.02
Building Number	#152
Drawing Number	AS001
VA Project Number	695-325

OFFICE OF FACILITIES MANAGEMENT

VA U.S. Department of Veterans Affairs

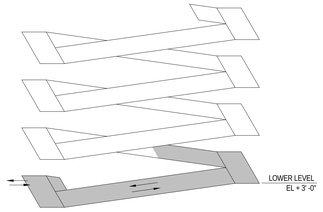

KEY PLAN - LOWER LEVEL

SCALE: 12" = 1'

PLAN LEGEND

- NEW PRECAST CONC WALL RE: STRUCT
- NEW PRECAST CONC WALL RE: STRUCT
- 101 — NEW DOOR / DOOR TAG
- ROOM 101 — ROOM TAG
- NEW WALL TAG — INDICATES STRUCTURAL MATERIAL; INDICATES NOMINAL SIZE; INDICATES CONSTRUCTION; INDICATES TOP OF WALL CONDITION; S3.A2 — REFER TO WALL LEGEND FOR MORE INFORMATION
- 1 — PLAN NOTE
- 1 — ALTERNATE/BID DEDUCT ITEM
- PT-1 — FINISH INDICATION
- A — STOREFRONT/WINDOW
- T — GLAZING

FLOOR PLAN NOTES

P1	SNOW CHUTE ALL LEVELS, RE: STRUCT
P2	CHAIN LINK GATE FOR SNOW CHUTE ACCESS. WELD CHAIN LINK HINGE POSTS TO ANCHOR PLATE BOLTED TO DECK, RE: STRUCT
P3	PARKING BOLLARD, RE: ENLARGED PLANS

FLOOR PLAN GENERAL NOTES

1. SEE STRIPING/SIGNAGE PLANS FOR DETAILS AND DIMENSIONS OF PAINTED TRAFFIC MARKINGS.
2. CONTRACTOR TO VERIFY ALL DIM'S IN THE FIELD AND NOTIFY THE OWNER OF ANY DESCREPENCIES PRIOR TO THE BEGINNING OF WORK.
3. DIMENSIONS INDICATED ARE TO FACES OF CMU/STUDS/STRUCTURE MATERIALS AND GRID LINES (TYPICAL), UNLESS NOTED OTHERWISE.
4. PROVIDE SEALANT AT ALL CONCRETE SLAB TO WALL INTERSECTIONS.
5. PAINT EXPOSED STEEL AND CONNECTIONS PT-1 (WHITE). TYPICAL.
6. REFER TO STRUCT FOR ALL WALL TYPES.

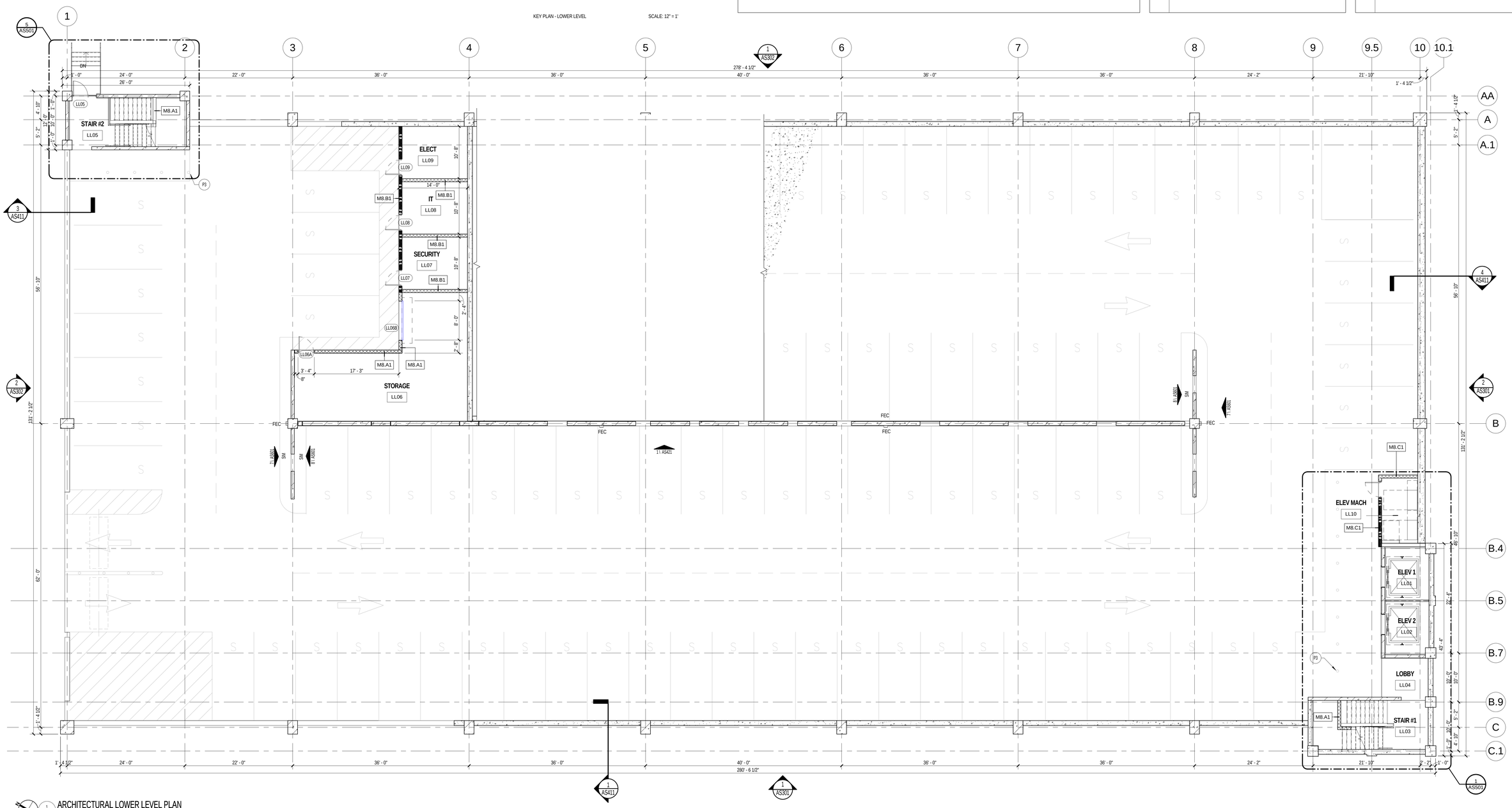

ARCHITECTURAL LOWER LEVEL PLAN

SCALE: 1/8" = 1'-0"

Revisions:	Date

VA — U.S. Department of Veterans Affairs

VAMC MILWAUKEE
5000 W. National Ave. Milwaukee, WI 53295

ARCHITECT/ENGINEERS:

PROJECT LEAD
Architect, Structural Engineer, Civil Engineer
GUIDON DESIGN
905 N. CAPITOL AVE. SUITE 100 INDIANAPOLIS, IN. 46204
317.800.6388 WWW.GUIDONDESIGN.COM
SUSTAINABLE ARCHITECTURE + ENGINEERING

MEP Engineer
APOGEE CONSULTING GROUP
1151 Kildaire Farm Rd.
Suite 120
Cary, NC 27511
Tele: 919-858-7420

Parking Consultant
CARL WALKER INC.
11920 S. Highland Ave.
Suite 2107
Lombard, IL 60148
Tele: 630-307-3800

BID SET

Drawing Title	Project Title	A/E Project Number	
LOWER LEVEL - FLOOR PLAN	PARKING STRUCTURE - LOT 7	14.1020.02	OFFICE OF FACILITIES MANAGEMENT
		Building Number: #152	
Approved for Design Concept: FACILITY MANAGEMENT DIVISION MANAGER	Location: CLEMENT J ZABLOCKI VAMC	Drawing Number: AS101	VA Project Number: 695-325
	Date: 1 DEC 2015 / Checked By: LL / Drawn By: EA		VA U.S. Department of Veterans Affairs

U:\GD_REVIT_LOCALS\14.1020.02-A-MVA-Garage_edecina.rvt