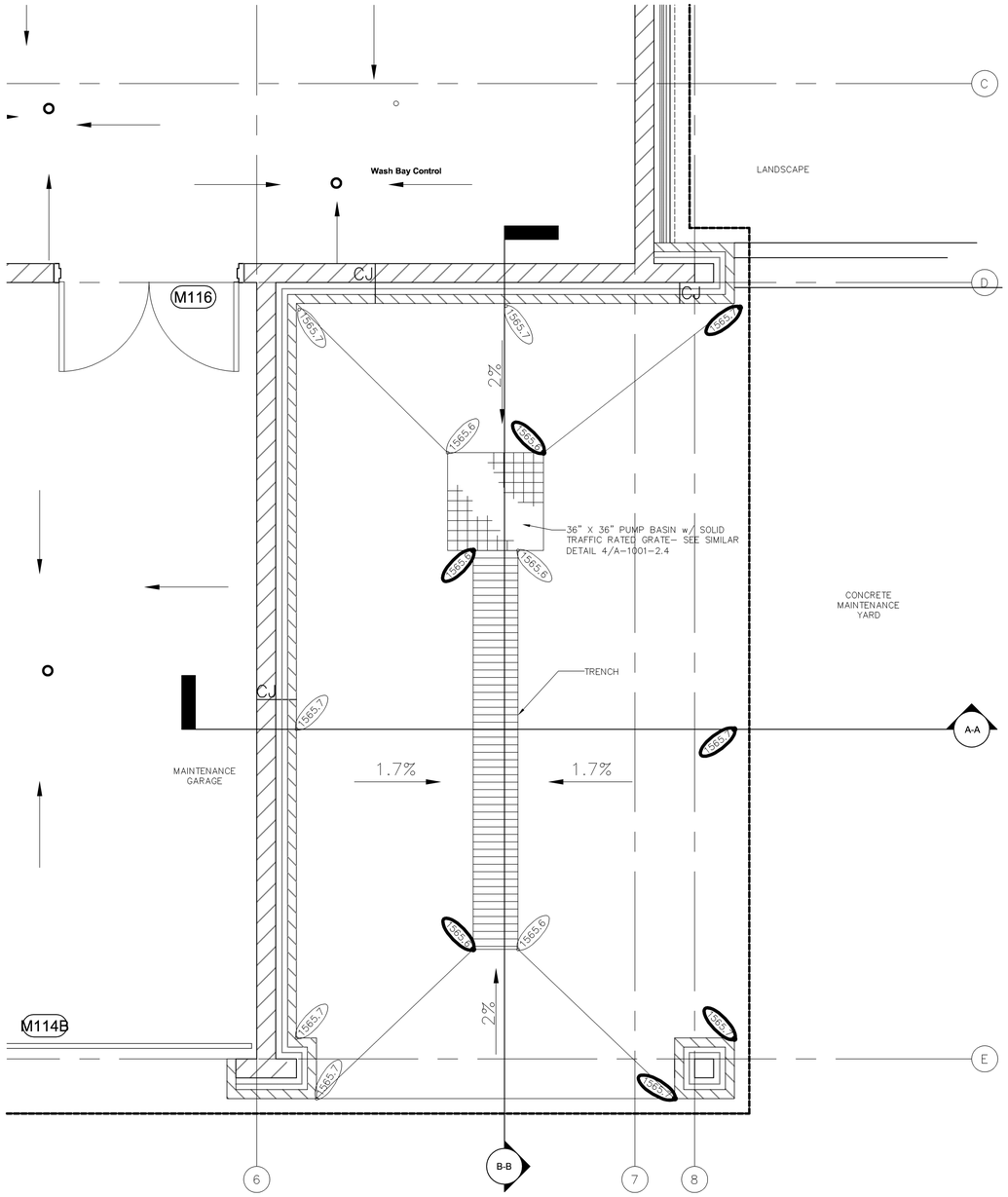

1 A-3002 / 2.4 WASHBAY FLOOR PLAN
SCALE: 1/2"=1'-0"

NORTH

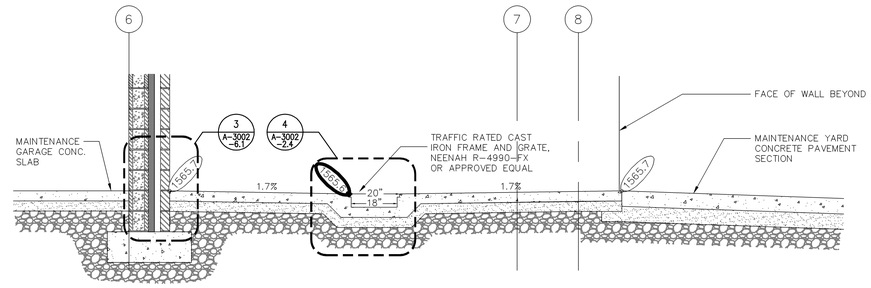

2 A-3002 / 2.4 SECTION A-A
SCALE: 1/2" = 1'-0"

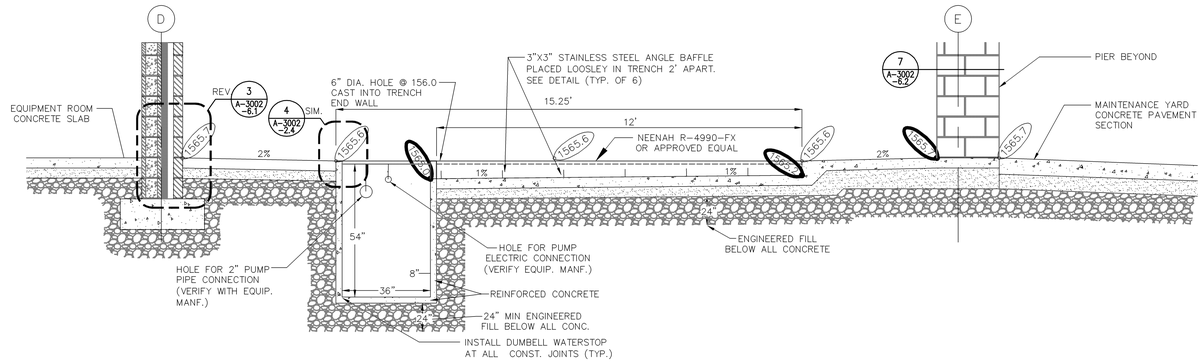

3 A-3002 / 2.4 SECTION B-B
SCALE: 1/2" = 1'-0"

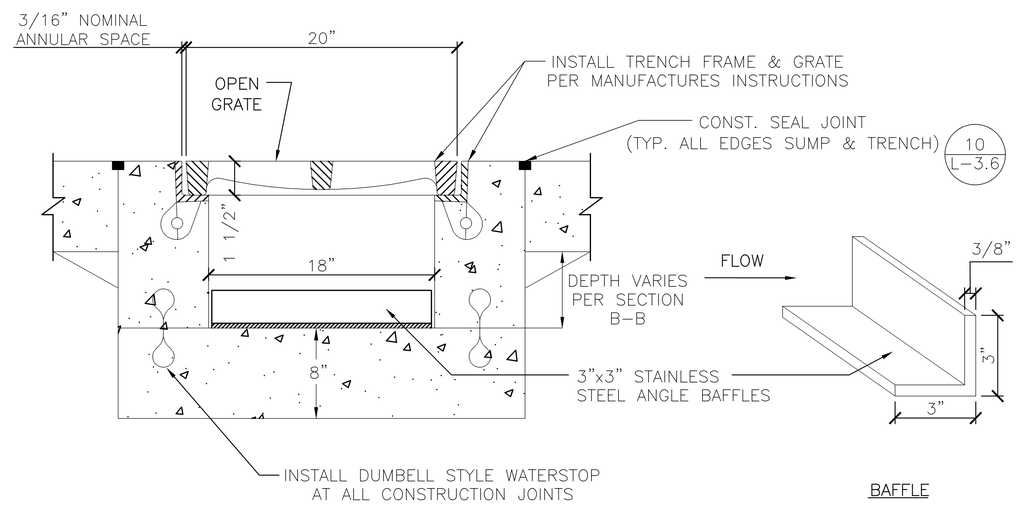

4 A-3002 / 2.4 TRENCH GRATE, CHANNEL & BAFFLE
SCALE: NOT TO SCALE

NOTES:

1. SUMP & TRENCH WALLS TO BE 8" THICK EXPOXY COATED STRUCTURAL CONCRETE, REINFORCED WITH 4" REBAR 12" C-C BOTH HORZ. AND VERT., EXTENT REINFORCE AROUND CORNERS WITH BENDS PER CRSI. 2" MIN. CLEAR TO FACE, 12" MIN. LAP AT SPLICES.

2. SUMP MAT BE PRE-CAST OR CAST IN PLACE.

3. CONTRACTOR TO VERIFY ALL DIMENSIONS WITH WASH WATER RECYCLING EQUIPMENT PER MANUFACTURES RECOMENDATIONS

BID DOCUMENTS 7/1/2011

Revisions	Date

REGISTERED PROFESSIONAL ENGINEER 83188 OREGON SEPT. 29, 2009 GARY R. JOHNSON
EXPIRES: 06/30/2013

Anderson Engineering of Minnesota, LLC
13605 1st AVENUE NORTH, SUITE 100, PLYMOUTH, MN 55441
TEL (763) 412-4000 FAX (763) 412-4090
www.ae-mn.com

NATIONAL CEMETERY ADMINISTRATION

Drawing Title: WASHBAY FLOOR PLAN AND SECTIONS	Project Title: REPLACE ADMINISTRATION AND MAINTENANCE BUILDING AND SITE IMPROVEMENTS		Date: 7-1-2011
Approved: Director, Office of Construction Management	Building Number: 3002	Checked: GRJ / Drawn: AMT/PSH	Project No.: 906CM3009
Approved: Director, Project Management Service	Location: EAGLE POINT NATIONAL CEMETERY 2763 RILEY ROAD EAGLE POINT, OR 97524		DRAWING NO.: A-3002-2.4 Dwg. 107 Of 181