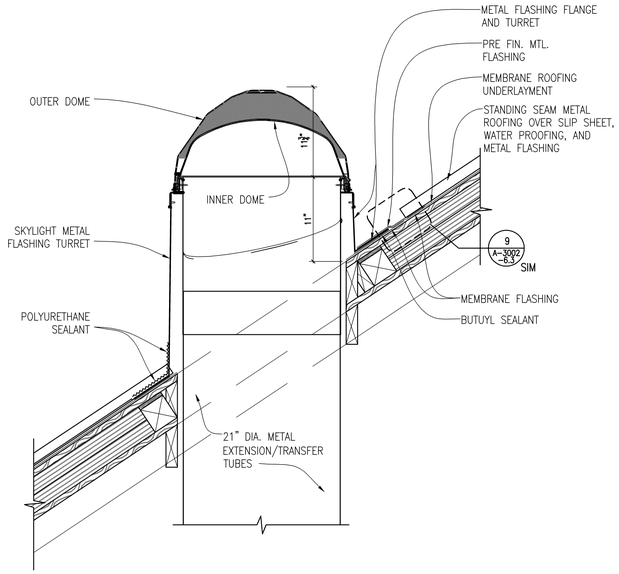

1 A-3002 -6.3 TUBE SKYLIGHT DETAIL
SCALE: 1 1/2"=1'-0" (ROOF)

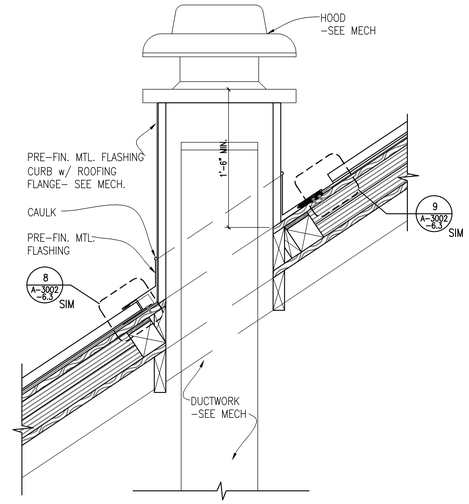

2 A-3002 -6.3 ROOF MOUNTED MECH. HOOD
SCALE: 1 1/2"=1'-0"

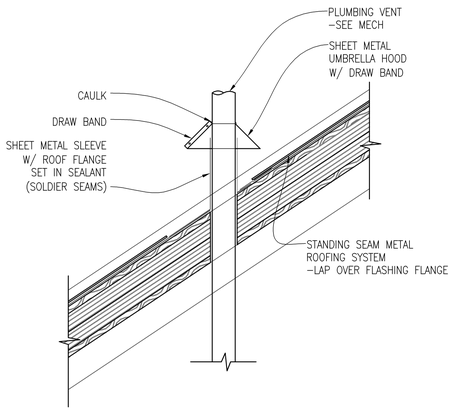

3 A-3002 -6.3 PLUMBING VENT
SCALE: 1 1/2"=1'-0" (ROOF)

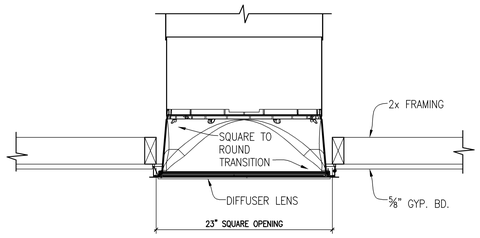

4 A-3002 -6.3 TUBE SKYLIGHT DETAIL
SCALE: 1 1/2"=1'-0" (CEILING)

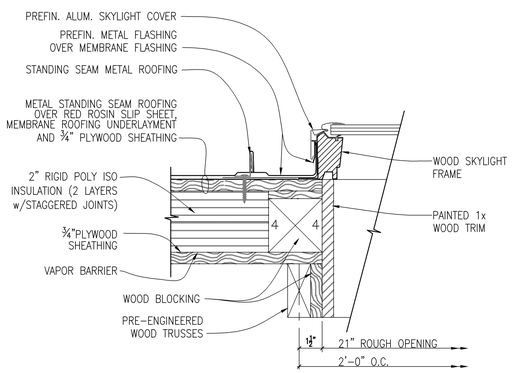

5 A-3002 -6.3 SKYLIGHT JAMB
SCALE: 3"=1'-0"

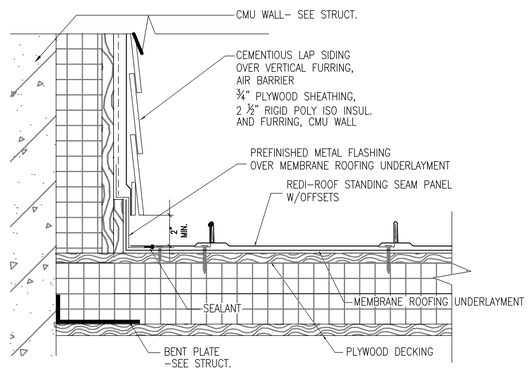

6 A-3002 -6.3 FACIA RAKE WALL DETAIL
SCALE: 3"=1'-0"

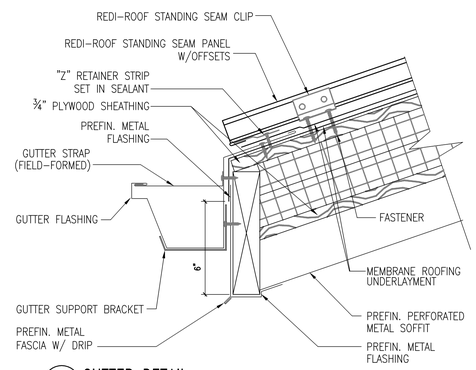

7 A-3002 -6.3 GUTTER DETAIL
SCALE: 3"=1'-0"

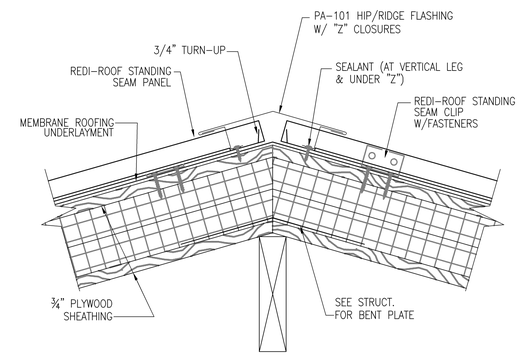

8 A-3002 -6.3 HIP/RIDGE DETAIL
SCALE: 3"=1'-0"

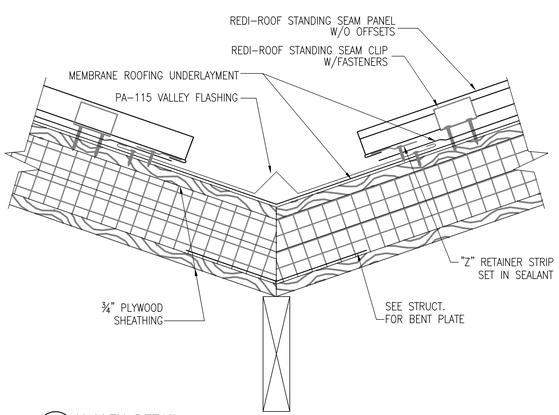

9 A-3002 -6.3 VALLEY DETAIL
SCALE: 3"=1'-0"

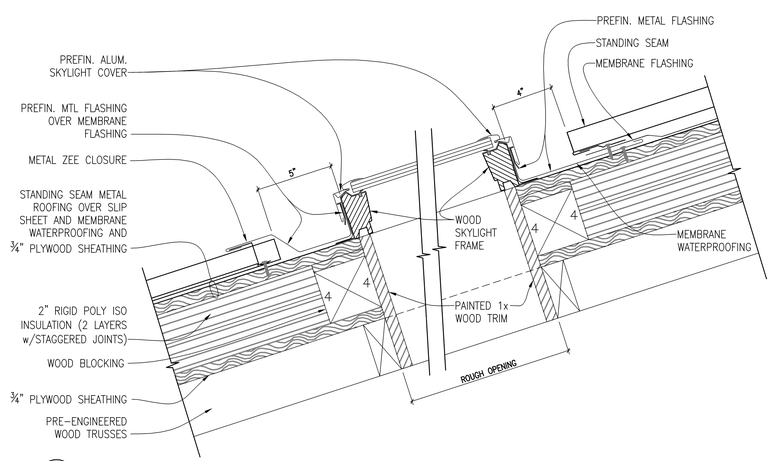

10 A-3002 -6.3 SKYLIGHT VERTICAL SECTION
SCALE: 3"=1'-0"

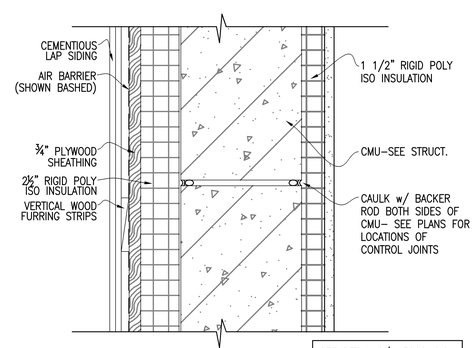

SEE DETAIL 9/A-3002-6.2 FOR TYPICAL EXTERIOR WALL MATERIALS

11 A-3002 -6.3 MASONRY CONTROL JOINT DETAIL
SCALE: 3"=1'-0"

BID DOCUMENTS 7/1/2011

Revisions	Date

I HEREBY CERTIFY THAT THIS PLAN, SPECIFICATION, OR REPORT WAS PREPARED BY ME OR UNDER MY DIRECT SUPERVISION AND THAT I AM A DULY LICENSED ARCHITECT UNDER THE LAWS OF THE STATE OF MINNESOTA.
PRINT NAME: CHARLES I. SCOTT, AIA
SIGNATURE:
DATE 7/1/2011 LICENSE # 18675

Anderson Engineering of Minnesota, LLC
13605 1st AVENUE NORTH, SUITE 100, PLYMOUTH, MN 55441
TEL (763) 412-4000 FAX (763) 412-4090
www.ae-mn.com

NATIONAL CEMETERY ADMINISTRATION

Drawing Title: MAINTENANCE BUILDING EXTERIOR DETAILS	Project Title: REPLACE ADMINISTRATION AND MAINTENANCE BUILDING AND SITE IMPROVEMENTS		Date: 7-1-2011
			Project No. 906CM3009
Approved: Director, Office of Construction Management	Building Number	Checked GRJ / Drawn AMT/PSH	DRAWING NO. A-3002-6.3
Approved: Director, Project Management Service	Location: EAGLE POINT NATIONAL CEMETERY 2763 RILEY ROAD EAGLE POINT, OR 97524		Dwg.113 OF 181