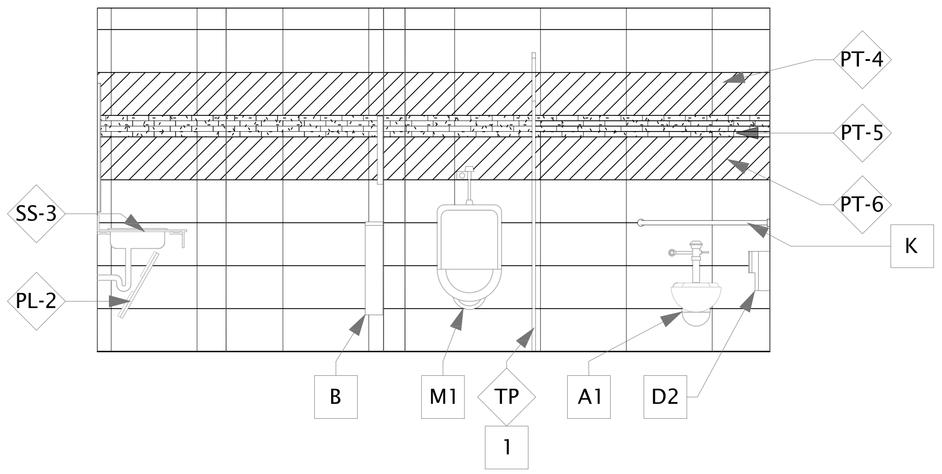

1 MEN'S SOUTH
SCALE: ½" = 1'-0"

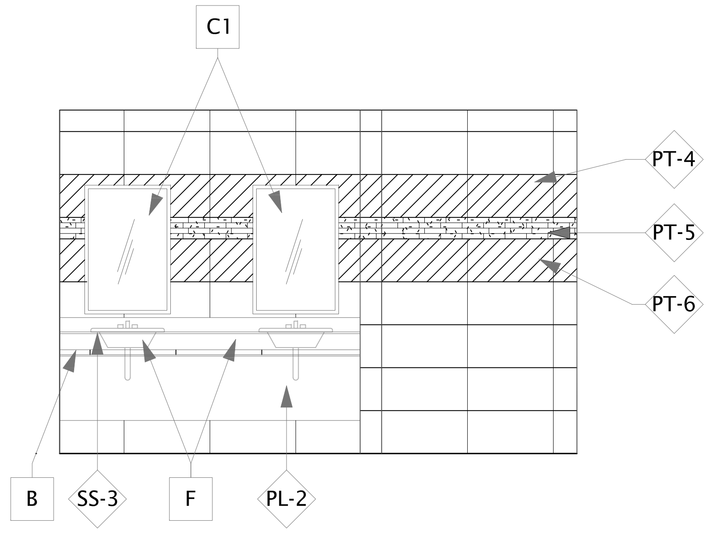

2 MEN'S EAST
SCALE: ½" = 1'-0"

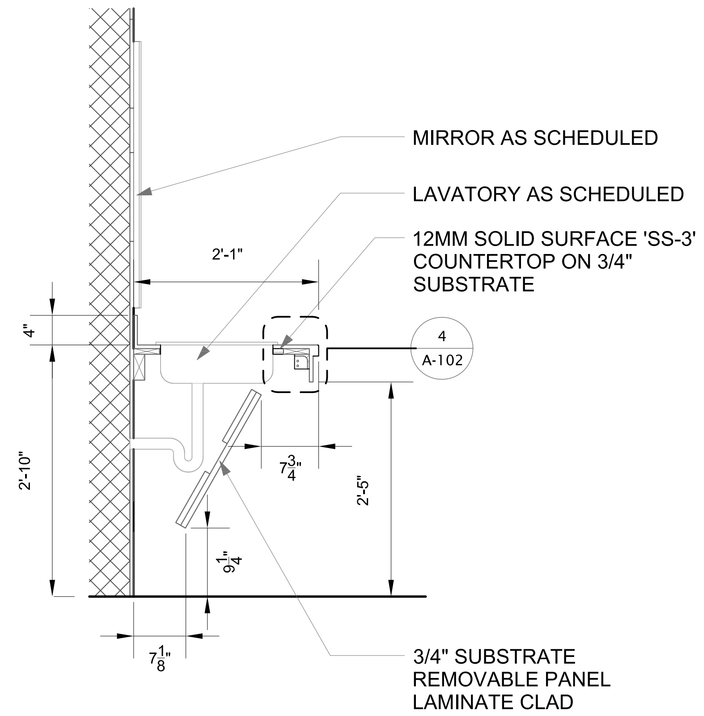

3 VANITY SECTION
SCALE: N.T.S.

TOILET ACCESSORY AND FIXTURE LEGEND

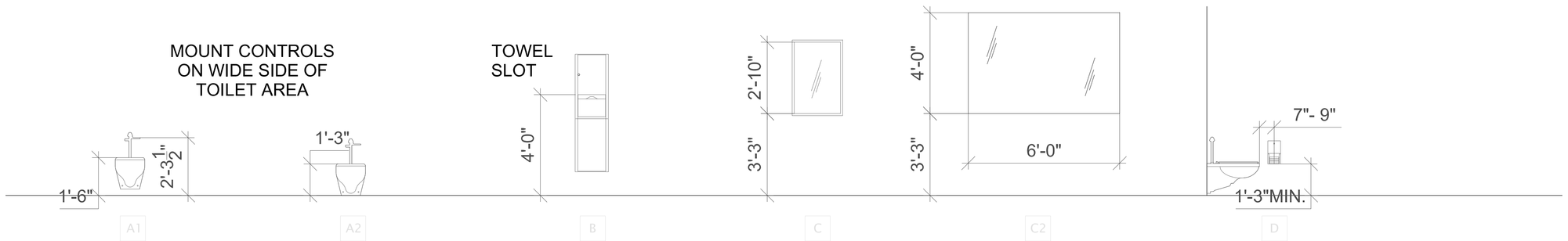

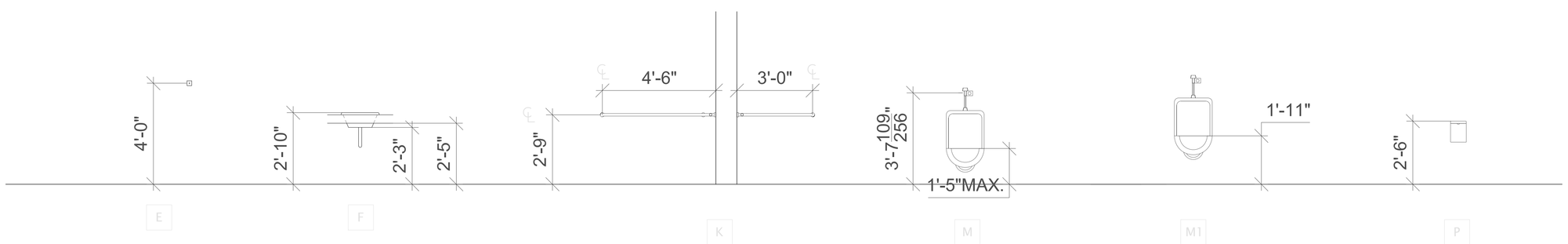

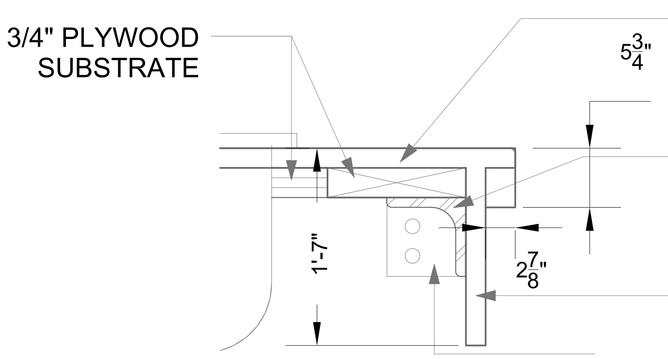

4 BRACE DETAIL
SCALE: N.T.S.

Revisions	Date

NATIONAL CEMETERY ADMINISTRATION

Drawing Title **INTERIOR ELEVATIONS**	Project Title **RENOV. HEMICYCLE RESTROOMS**		Date **03/14/2016**
			Project No. **851-16-201**
Approved: Division Chief	Building Number -----	Checked	Drawn **CFC**
Approved: Service Director	Location **HOUSTON NATIONAL CEMETERY**		DRAWING NO. **A-103** Dwg. 4 Of 4