GENERAL NOTES

1. ALL ELECTRICAL EQUIPMENT SHOWN ON THE DRAWINGS AND/OR REQUIRED FOR THE FULL INTEGRITY AND COMPLETION OF THE CONTRACT SHALL BE FURNISHED, INSTALLED AND CONNECTED BY THE CONTRACTOR, EXCEPT WHERE EQUIPMENT SHOWN IS IDENTIFIED AS "EXISTING" OR OTHERWISE NOTED ON THE DRAWINGS, TO PRODUCE FULLY FUNCTIONAL AND COMPLETE SYSTEMS.
2. EXCEPT WHERE SPECIFICALLY DIMENSIONED OR OTHERWISE LOCATED BY PERTINENT DETAILS, THE ROUTING OF CONDUITS SHOWN ON PLANS IS APPROXIMATE. THE CONTRACTOR MAY MODIFY CONDUIT ROUTINGS SHOWN ON DRAWINGS TO ACCOMMODATE EXISTING FIELD CONDITIONS, PROVIDED THAT PROPER PULL BOXES ARE PROVIDED TO FACILITATE CABLE PULLING. THE EXACT ROUTING AND METHODS OF SUPPORT SHALL BE DETERMINED IN THE FIELD, AND APPROVED BY THE COR.
3. ALL WORK SHALL BE DONE IN ACCORDANCE WITH FEDERAL REGULATIONS, INCLUDING THE AMERICANS WITH DISABILITIES ACT – ADA, GSA PBS–100, OCCUPATIONAL SAFETY AND HEALTH ADMINISTRATION (OSHA), ALL STATE CODES AND REGULATIONS GOVERNING THE INSTALLATION, INCLUDING BUT NOT LIMITED TO THE CURRENT EDITION OF THE FOLLOWING CODES:
   a. NFPA 70 – 2014, NATIONAL ELECTRICAL CODE
   b. NFPA 72 – 2010, NATIONAL FIRE ALARM CODE
   c. NFPA 90A – 2009, STANDARD FOR THE INSTALLATION OF A/C AND VENTILATION SYSTEMS
   d. NFPA 99 – 2009, HEALTH CARE FACILITY CODE
   e. NFPA 101 – 2009, LIFE SAFETY CODE
   f. NFPA 110 – 2009, STANDARD FOR EMERGENCY AND STANDBY POWER SYSTEMS
   g. VA FIRE PROTECTION DESIGN MANUAL
   h. VA ELECTRICAL DESIGN MANUAL FOR HOSPITALS
   i. VA MISSION CRITICAL FACILITIES DESIGN MANUAL
4. ALL 600 VOLT ELECTRICAL POWER CONDUCTORS SHALL BE COPPER, INSULATION TYPE XHHW OR DUAL RATED THHN/THWN, RATED 90 DEGREES CENTIGRADE, AND INSTALLED IN RACEWAY PER CODE AND SPECIFICATION REQUIREMENTS.
5. THE CONTRACTOR SHALL PROVIDE ALL NECESSARY MATERIALS, LABOR AND ATTENDANCE FOR THE OPERATION OF TEMPORARY LIGHT AND CONSTRUCTION POWER AS REQUIRED DURING WORKING HOURS FOR THE ENTIRE CONSTRUCTION PERIOD.
6. THE CONTRACTOR SHALL FIELD VERIFY ALL DIMENSIONS AND EXISTING CONDITIONS. ALL DISCREPANCIES THAT MAY INTERFERE WITH THE PROJECT SHALL BE REPORTED TO THE COR BEFORE STARTING WORK.
7. ALL CONDUITS SHALL BE 3/4" MINIMUM SIZE UNLESS OTHERWISE NOTED. POWER CONDUITS SHALL BE RIGID GALVANIZED STEEL (RGS) IN MECHANICAL AND ELECTRICAL ROOMS, PROCESS AREA AND CHEMICAL ROOMS SHALL USE PVC COATED RIGID GALVANIZED STEEL CONDUIT (ROB–ROY) AND ALL OTHER ABOVE GRADE AREAS SHALL BE RGS. ALL UNDERGROUND CONDUIT SHALL BE SCHEDULE 80 PVC. FLEXIBLE OR LIQUIDTIGHT FLEXIBLE CONDUIT MAY BE USED IN LENGTHS NOT EXCEEDING 5' TO CONNECT LIGHTING FIXTURES OR VIBRATING EQUIPMENT.
8. ALL RACEWAYS, WIRING AND OTHER WORK IS NEW UNLESS SPECIFICALLY INDICATED OTHERWISE ON DRAWINGS OR DESCRIBED IN SPECIFICATIONS.
9. MAINTAIN THE CONTINUITY OF EXISTING CIRCUITS THAT ARE NOT BEING REMOVED UNDER THIS CONTRACT, BUT WHICH MAY BE AFFECTED BY THIS WORK. PROVIDE CONDUIT, WIRING, ETC. THAT MAY BE NECESSARY TO MAINTAIN THE FUNCTIONALITY OF ALL EXISTING CIRCUITS AND SYSTEMS.
10. ALL WALLS, FLOORS AND OTHER SURFACES THAT ARE CUT OR DRILLED IN ORDER TO EXECUTE THE WORK SHALL BE PATCHED AND FINISHED TO MATCH ADJACENT SURFACES. PROVIDE FIRE PROOFING AS REQUIRED; SEE NOTE 18.
11. ALL EQUIPMENT THAT IS REMOVED SHALL BECOME THE PROPERTY OF THE CONTRACTOR, UNLESS INDICATED OTHERWISE BY THE COR, AND SHALL BE REMOVED FROM THE PREMISES AND DISPOSED OF IN ACCORDANCE WITH ALL APPLICABLE LAWS, ORDINANCES AND REQUIREMENTS.
12. ALL NEW CONDUIT SHALL BE RUN ABOVE CEILINGS, IN HOLLOW WALLS OR OTHERWISE CONCEALED WHEREVER POSSIBLE.
13. ELECTRICAL CONTRACTOR IS RESPONSIBLE FOR THE ENTIRE SET OF DRAWINGS TO INCLUDE THE REMOVAL, RELOCATION, DISCONNECT OR CONNECTION OF EXISTING AND PROPOSED EQUIPMENT AND UTILITIES.
14. MAINTAIN EXISTING FIRE ALARM, DETECTION, COMMUNICATIONS, SECURITY AND OTHER SYSTEMS FULLY OPERATIONAL AND IN SERVICE AT ALL TIMES, UNLESS OTHERWISE APPROVED IN WRITING BY THE COR. THE CONTRACTOR SHALL COMPLY WITH NFPA 101 IF FIRE ALARM OR SPRINKLER SYSTEMS WILL BE OUT OF SERVICE DUE TO PROJECT RELATED WORK. A FIRE WATCH, AT THE CONTRACTOR'S EXPENSE, SHALL BE PROVIDED AS REQUIRED OR DIRECTED.
15. ALL ASBESTOS CONTAINING MATERIALS (ACM) AND LEAD PAINT KNOWN TO THE VA HAVE BEEN REMOVED, ABATED, OR ARE NOT IN AREAS AFFECTED BY THIS WORK. SHOULD THE CONTRACTOR ENCOUNTER ANY SUSPECTED ACM OR LEAD PAINT WHILE PERFORMING WORK, NOTIFY THE COR IMMEDIATELY.
16. THE CONTRACTOR SHALL COOPERATE FULLY WITH ALL VA PERSONNEL DURING CONSTRUCTION OPERATIONS TO MINIMIZE CONFLICTS AND INCONVENIENCE TO FACILITY OPERATIONS. PERFORM ALL WORK DURING NORMAL FACILITY WORKING HOURS, EXCEPT FOR THOSE TASKS REQUIRING POWER OUTAGES WHICH MUST BE DONE NIGHTS/WEEKENDS AS APPROVED BY THE COR 7 DAYS IN ADVANCE OF SUCH OUTAGE. ALL NECESSARY CORE DRILLING MUST BE PERFORMED BY THE CONTRACTOR AND MUST BE SCHEDULED AND APPROVED BY THE COTR 48 HOURS IN ADVANCE. THE CONTRACTOR SHALL NOT INTERFERE WITH BUILDING OPERATIONS. THE FACILITY IS OCCUPIED AND OPERATIONAL 24 HOURS, 7 DAYS PER WEEK.
17. THE CONTRACTOR SHALL MAINTAIN ALL MEANS OF EGRESS FROM THE WORKPLACE FREE OF OBSTRUCTIONS OR IMPEDIMENTS TO TRAVEL, SO THAT PERSONNEL WILL HAVE IMMEDIATE AND UNINHIBITED PASSAGE FROM OR THROUGH THE WORKPLACE IN THE EVENT OF A FIRE OR OTHER EMERGENCY. THE CONTRACTOR WILL AT ALL TIMES PREVENT ANY MATERIALS OR DEBRIS FROM BLOCKING ACCESS TO EXITS AND PASSAGEWAYS TO EXITS. CONSTRUCTION MATERIALS SHALL BE SECURELY STORED, WITH DEBRIS REMOVED AT THE END OF EACH WORK DAY.
18. THE CONTRACTOR SHALL PATCH AND SEAL ALL OPENINGS IN WALLS, FLOORS OR CEILINGS WITH UL OR FM APPROVED FIRE RESISTIVE MATERIALS, AS FURTHER DESCRIBED IN SPECIFICATIONS AND DRAWING DETAILS. THE RATING OF THE FIRESTOPPING MUST AT LEAST EQUAL THE RATING OF THE EXISTING BARRIER (SMOKE TIGHT, 1–HOUR FIRE RATED, 2–HOUR FIRE RATED, ETC.) OPENINGS IN FLOORS MUST BE SEALED AT THE END OF EACH WORK DAY WITH TEMPORARY "FIRE STOPS" OR "FIRE PLUGS" UNTIL THE PERMANENT FIRE STOPPING MATERIALS ARE APPLIED.
19. THE CONTRACTOR MUST NOT WORK ON ANY ENERGIZED EQUIPMENT ON THIS PROJECT UNLESS APPROVED BY THE COR. ALL CONTRACTOR PERSONNEL MUST UTILIZE APPROPRIATE PERSONAL PROTECTIVE EQUIPMENT (PPE) FOR WORKING CONDITIONS ENCOUNTERED.
20. ALL ELECTRICAL EQUIPMENT THAT IS SHUT DOWN FOR REPLACEMENT OR MODIFICATION SHALL BE LOCKED–OUT AND TAGGED–OUT. THE CONTRACTOR SHALL SUBMIT A LOCK–OUT / TAG–OUT PLAN TO THE COR FOR APPROVAL PRIOR TO STARTING WORK, WHICH SHALL BE COORDINATED WITH THE FACILITY ELECTRICAL SHOP.
21. THE CONTRACTOR SHALL PROVIDE TEMPORARY CONSTRUCTION BARRIERS AS REQUIRED AND AS DIRECTED TO PREVENT DUST IN CONSTRUCTION AREAS FROM ENTERING THE OCCUPIED AREAS.
22. CONTRADICTORY OR MISSING INFORMATION ON THESE DRAWINGS, SUCH AS WIRE SIZES, CIRCUIT BREAKER AMPS OR NUMBER OF POLES, ETC., WHICH ARE FOUND TO BE DIFFERENT FROM ACTUAL FIELD CONDITIONS OBSERVED WHILE PERFORMING WORK UNDER THIS CONTRACT, SHALL BE CAREFULLY MARKED ON THE AS–BUILT DRAWINGS.
23. ABANDONED UNUSED WIRING/CONDUIT OR DEVICES SHALL NOT BE LEFT ANYWHERE IN PROJECT AREA, INCLUDING AREA ABOVE CEILINGS. REMOVE ALL UNUSED WIRING/CONDUIT BACK TO SOURCE PANEL.

LIGHTING FIXTURE SCHEDULE

MARK	SYMBOL	DESCRIPTION	VOLTAGE	LAMPS			MOUNTING	MANUFACTURER AND CATALOG NUMBER	REMARKS	NOTES
				NO	WATT	TYPE				
A	A	LED HIGH BAY	277V	1	102W	LED 5000K	24"AFF SWIVEL PENDANT MOUNT	BASIS OF DESIGN VISIONAIRE LIGHTING PGA–1–T5–48LC–7–5K–UNV–DIM–MS	COMPATIBLE WITH OCCUPANCY SENSORS, 0–10V DIMMING, INSTANT ON; ZERO RESTRIKE	1,2,3,4
B	B	4' LED WRAPAROUND	277V	1	48W	LED 4000K	SURFACE CEILING AND/OR BEAM	BASIS OF DESIGN TEXAS FLUORESCENTS 209–A–48L–S48W4800L–DMV–MV–40K	COMPATIBLE WITH OCCUPANCY SENSORS, 0–10V DIMMING	1,2,3,4
C	C	4" LED CAN	277V	1	10W	LED 4000K	RECESSED CEILING SHOWER LIGHT	BASIS OF DESIGN LITON LIGHTING LHLD410C50–BLANK–BLANK LRLD401W–FR–WL	SHOWER LIGHT WITH FRESNELL GLASS LENS	1,2,3,4
D	D	2'X2' LED RECESSED	277V	1	48W	LED 4000K	RECESSED CEILING	BASIS OF DESIGN TEXAS FLOURESCENTS 131–A.125–22L–H48W4350L–DMV–MV–40K	COMPATIBLE WITH OCCUPANCY SENSORS, 0–10V DIMMING	1,2,3,4
F	F	4' LED WRAPAROUND VAPORTIGHT	277V	1	51W	LED 4000K	SURFACE CEILING AND/OR BEAM	BASIS OF DESIGN TEXAS FLUORESCENTS CIT48L–RF–51W5014L–PG–DMV–40K–MDT4W	COMPATIBLE WITH OCCUPANCY SENSORS, 0–10V DIMMING, STAINLESS STEEL/CORROSION PROOF HOUSING	1,2,3,4
W	W	LED WALLPACK	277V	1	14W	LED 5000K	SURFACE OUTSIDE WALL	BASIS OF DESIGN TEXAS FLUORESCENTS MLW–6L–14W750L–500K–BZ–PC277	BLACK SKY CERTIFIED COMPATIBLE WITH PHOTOCELL SENSORS.	1,2,3,4
X		LED EXIT SIGNS	277V	1	10W	LED RED	SURFACE WALL	BASIS OF DESIGN BARRON EXITRONIX ILX–R–EM–WH	NONE	1,2,3,4,5
EM	EM	LED EMERGENCY WALLPACK	277V	1	2.2W	LED	SURFACE WALL	BASIS OF DESIGN BARRON EXITONIX LED–90–BLANK–G2–WPV–2	NONE	1,2,3,4
S		LED POLL MOUNTED SITE LIGHT	277V	1	75W	LED 5500K	15' POLE	BASIS OF DESIGN VISIONAIRE LIGHTING PST–2–L–T3–72LC–3–55K–UNV–BOA6–PC SNTS–4S–11–16'–9BC–343–S1	BLACK SKY CERTIFIED, PROVIDE 15' POLE, CONCRETE BASE, MOUNTING ARM AND ACCESSORIES	1,2,3,4
WS	WS	LED SECURITY FLOOD LIGHT	277V	1	280W	LED	20' AFF SURFACE OUTSIDE WALL	BASIS OF DESIGN TBD LUENTON LIGHTING FL1280–N5280R–60X135–UNV–STANDARD–A	BLACK SKY CERTIFIED COMPATIBLE WITH PHOTOCELL SENSORS.	1,2,3,4
SB	SB	LED BOLLARD LIGHT	277V	1	16W	LED	7" ROUND BALLARD	BASIS OF DESIGN LUMENTON LIGHTING BL434–N644C–277–B	BLACK SKY CERTIFIED, PROVIDE POLE, CONCRETE BASE, AND ACCESSORIES	1,2,3,4

NOTES:
1. PROVIDE TRIM AND ACCESSORIES SUITABLE FOR MOUNTING FIXTURES IN EACH LOCATION INDICATED ON PLANS. COORDINATE WITH ARCHITECTURAL FINISH SCHEDULE AND REFLECTED CEILING PLANS.
2. VERIFY COLOR, TRIMS, ACCESSORIES WITH ARCHITECT PRIOR TO ORDERING.
3. COORDINATE LOCATIONS AND MOUNTING REQUIREMTNS WITH FIELD CONDITIONS.
4. LISTED FIXTURES MANUFACTURER INFORMATION SHALL SERVE AS THE BASIS OF DESIGN.
5. PROVIDE FACE(S) AND ARROWS AS INDICATED ON DRAWINGS.

ABBREVIATIONS

A, AMP	AMPERE	KW	KILOWATT
AC	ALTERNATING CURRENT	LTG	LIGHTING
AF	AMPERE FRAME	MFR	MANUFACTURER
AFF	ABOVE FINISHED FLOOR	MCB	MAIN CIRCUIT BREAKER
APPROX	APPROXIMATELY	MER	MECHANICAL EQUIPMENT ROOM
AUX	AUXILIARY	MIN	MINIMUM
AWG	AMERICAN WIRE GAUGE	MISC	MISCELLANEOUS
BKR	BREAKER	MLO	MAIN LUGS ONLY
BLDG	BUILDING	MTD	MOUNTED
C, CDT	CONDUIT	N, NEUT	NEUTRAL
CAT	CATALOG	N/C	NORMALLY CLOSED
CKT BKR	CIRCUIT BREAKER	NEC	NATIONAL ELECTRIC CODE
CKT(S)	CIRCUIT(S)	N/O	NORMALLY OPEN
COR	VA CONTRACTING OFFICERS	PNL	PANEL
CRI	COLOR RENDERING INDEX	PWR	POWER
DISC	DISCONNECT	RECEPT	RECEPTACLE
DWG(S)	DRAWING(S)	REF	REFERENCE
ELECT	ELECTRIC, ELECTRICAL	REQD	REQUIRED
EM, EMERG	EMERGENCY	RGS	RIGID GALVANIZED STEEL
EQUIP	EQUIPMENT	SP	SINGLE POLE
EXIST	EXISTING	SPEC	SPECIFICATION
FA	FIRE ALARM	SPST	SINGLE POLE SINGLE THROW
FACP	FIRE ALARM CONTROL PANEL	SW	SWITCH
FDR	FEEDER	SYM	SYMMETRICAL
FIXT	FIXTURE	SYS	SYSTEM
G, GND, GRD	GROUND	SUPT	SUPPORT
G.F.	GOVERNMENT FURNISHED	TEL	TELEPHONE
GFI	GROUND FAULT CIRCUIT INTERRUPT	TEMP	TEMPERATURE
GOVT.	GOVERNMENT	THD	TOTAL HARMONIC DISTORTION
HP	HORSEPOWER	UNO	UNLESS NOTED OTHERWISE
HTR	HEATER	V	VOLT
J.BOX	JUNCTION BOX	VAC	VOLTS ALTERNATING CURRENT
KVA	KILOVOLT AMPERE	W	WATT
		WP	WEATHER PROOF
		W/	WITH

LIGHTING CONTROL SEQUENCE

OFFICES, LAB AND CONTROL ROOMS:
1. CONTROLLED BY OCCUPANCY SENSORS WITH MANUAL OVERRIDE SWITCH.
2. LIGHTS AT FULL BRIGHTNESS WITH ACTIVITY IN OCCUPANCY SENSOR AREA OR OVERRIDE SWITCH ENGAGED.
3. LIGHTS OFF WITH NO ACTIVITY.

WATER TREATMENT PROCESS AREA:
1. CONTROLLED BY OCCUPANCY SENSORS.
2. LIGHTS AT FULL BRIGHTNESS WITH ACTIVITY IN OCCUPANCY SENSOR AREA.
3. LIGHTS AT 30% BRIGHTNESS WITH NO ACTIVITY DURING HOURS OF OPERATION.
4. LIGHTS OFF AFTER HOURS.

CHEMICAL STORAGE AREAS:
1. CONTROLLED BY OCCUPANCY SENSORS.
2. LIGHTS AT FULL BRIGHTNESS DURING WITH ACTIVITY IN OCCUPANCY SENSOR AREA.
3. LIGHTS OFF WITH NO ACTIVITY.

RESTROOMS AND STORAGE AREAS:
1. CONTROLLED BY OCCUPANCY SENSORS.
2. LIGHTS OFF WITH NO ACTIVITY AFTER AN ALLOTTED TIME DETERMINED BY COR.
3. LIGHTS AT FULL BRIGHTNESS WITH ACTIVITY IN OCCUPANCY SENSOR AREA.

EXTERIOR:
1. CONTROLLED BY PHOTO CELL ON ROOF.
2. LIGHTS OFF DURING DAYLIGHT.
3. LIGHTS AT FULL BRIGHTNESS DURING LOW LIGHT.

TRANSFORMER, FIRE ALARM, AND TELEPHONE ROOMS:
1. CONTROLLED BY MANUAL SWITCH.

POWER LEGEND

- KEY NOTE
- EQUIPMENT TAG
- NEW ABOVE GRADE / SLAB CONDUIT
- NEW UNDERGROUND / BELOW SLAB CONDUIT
- 480/277V 3PH PANELBOARD
- 208/120V 3PH PANELBOARD
- TRANSFORMER
- WORKING CLEARANCE
- MCC SECTIONS
- HOME RUN
- CIRCUITING BETWEEN DEVICES
- JUNCTION BOX
- DUPLEX RECEPTACLE 120V 20A MOUNTED AT 18" AFF UNO
- DUPLEX GFCI RECEPTACLE 120V 20A MOUNTED AT 18" AFF UNO
- DUPLEX GFCI COUNTER HEIGHT RECEPTACLE 120V 20A MOUNTED AT 48"AFF UNO
- QUADRAPLEX RECEPTACLE 120V 20A MOUNTED AT 18" AFF UNO
- QUADRAPLEX GFCI RECEPTACLE 120V 20A MOUNTED AT 18" AFF UNO
- L6–20R SPECIAL PURPOSE RECEPTACLE NOTE INDICATES NEMA TYPE
- DISCONNECT
- MOTOR WITH HORSE POWER RATING

COORDINATION NOTES

1. EQUIPMENT TAGS SHOWN ON ELECTRICAL PLANS ARE IN COORDINATION WITH MECHANICAL, PLUMBING AND PROCESS EQUIPMENT TAGS. REFER TO APPROPRIATE TRADE SCHEDULE SHEETS FOR FURTHER DETAILS.
2. ALL FEEDERS, BRANCH CIRCUITS AND COMMUNICATION WIRING ARE INSTALLED IN CONDUIT SHALL BE RUN PLUMB AND SQUARE AND AVOID CONFLICTS WITH BRIDGE CRANE AREA.
3. CONDUIT RUNS ARE SHOWN FOR DIAGRAMMATICAL INFORMATION ONLY. ALL ROUTING SHALL BE COORDINATE IN FIELD AND NOTED ON AS–BUILTS.
4. ELECTRICAL CONTRACTOR MAY COMBINE HOME RUNS IN SAME CONDUIT PER NEC AND DERATING CODES.
5. SIZE OF PULL BOXES AND LOCATIONS SHALL BE DETERMINED INFIELD AND SHALL BE IN ADHERENCE TO NEC.
6. CONTRACTOR CAN COMBINE PROCESS INSTRUMENTATION WIRING IN CONDUITS WHILE MAINTAINING DI/DO, AI/AO, AND 120V SEPARATION. COORDINATE QUAINTLY AND EXACT LOCATION WITH PROCESS EQUIPMENT BEING PURCHASED AND INSTALLED.

PROJECT NOTES

1. ALL BRANCH CIRCUITS ARE 2#12 & #12G – 3/4"C UNO.
2. ALL FEEDERS, BRANCH CIRCUITS AND COMMUNICATION WIRING ARE INSTALLED IN CONDUIT, RECESSED IN WALLS AND / OR RUN ABOVE HUNG CEILING. EXPOSED CONDUIT IN PROCESS AND CHEMICAL AREAS SHALL BE RUN PLUMB AND SQUARE.
3. INSTALL ALL RECEPTACLES 18"AFF UNO.
4. ALL LIGHTING FIXTURES CONTROLLED BY OCCUPANCY SENSORS SHALL BE PROVIDED COMPATIBLE WITH SENSOR REQUIREMENTS.

COM + FIRE ALARM LEGEND

- KEY NOTE
- NEW ABOVE GRADE / SLAB CONDUIT
- NEW UNDERGROUND / BELOW SLAB CONDUIT
- FACP FIRE ALARM CONTROL PANEL
- FIRE ALARM SPEAKER / STROBE ONE ASSEMBLY
- FIRE ALARM PULL STATION
- FIRE ALARM STROBE ONLY
- SMOKE DETECTOR
- HEAT DETECTOR
- 360 360 DEGREE CCTV CAMERA WITH ZOOM
- 180 DEGREE CCTV CAMERA WITH ZOOM
- CR CARD READER
- WIFI WIRELESS CONNECTION
- WINDOW GLASS BREAK SENSOR

ONE LINE LEGEND

- KEY NOTE
- EQUIPMENT TAG
- NEW ABOVE GRADE / SLAB CONDUIT
- NEW UNDERGROUND / BELOW SLAB CONDUIT
- PANEL / ENCLOSURE
- 40 3P CIRCUIT BREAKER
- TRANSFORMER
- FUSED SWITCH
- GENERATOR
- VFD VARIABLE FREQUENCY DRIVE
- DISCONNECT
- TEMPERATURE SENSOR SWITCH
- PUSH BUTTON LOCAL STOP
- NORMALLY CLOSED CONTACT
- NORMALLY OPEN CONTACT
- LIGHT
- FUSE
- OVER CURRENT PROTECTION
- HP MOTOR
- HAND OFF AUTO SWITCH

LIGHTING LEGEND

- KEY NOTE
- NEW ABOVE GRADE / SLAB CONDUIT
- NEW UNDERGROUND / BELOW SLAB CONDUIT
- OS OCCUPANCY SENSOR
- $ $3 $4 $OS SPST, THREE WAY, FOUR WAY AND OCCUPANCY SENSOR SWITCHES
- LIGHTING FIXTURE SEE LIGHTING FIXTURE FOR ADDITIONAL LEGENDS AND SYMBOLS
- HOME RUN
- CIRCUITING BETWEEN DEVICES

PROFESSIONAL CERTIFICATION
I HEREBY CERTIFY THAT THESE DOCUMENTS WERE PREPARED OR APPROVED BY ME, AND THAT I AM A DULY LICENSED PROFESSIONAL ENGINEER UNDER THE LAWS OF THE STATE OF MARYLAND, LICENSE NO. 46926, EXPIRATION DATE: 06/11/17

Fully Sprinklered

100% Bid Documents, September 1, 2015

Additions: | Date:

Revisions:

DCS Infrastructure, LLC
3249 route 112, building 4 suite 1B
Medford, N.Y. 11763 631-320-1706

Hatch Mott MacDonald

Approved:

Approved: Chief, Facilities and Engineering:

Approved: Associate Chief for Maintenance And Operations, Perry Point:

Approved: Engineering Projects Supervisor

Approved: Infection Control Officer

Drawing Title: ELECTRICAL LEGENDS, NOTES AND ABBREVIATIONS

Approved: Associate Director for Operations: VAPAHCS PLANNING AND ENGINEERING

Approved: Director, Medical Center:

Project Title: POTABLE WATER SYSTEM IMPROVEMENTS - TIER 1, PERRY POINT MD, VAMC

Scale:	Building No:	Checked:	Drawn:
NONE	103	MJM	MFM

Location: VAMC PERRY POINT, MD 21902

Date: 9/1/2015

Project No: 512A5-13-329

DRAWING NO: ES-001

62 OF 124

DEPARTMENT OF VETERANS AFFAIRS

GENERAL NOTES

1. COORDINATE ALL UNDERGROUND CONDUIT AND THE RE-ROUTING OF TELEPHONE LINES WITH PROCESS PIPING AND OTHER UTILITY REQUIREMENTS.

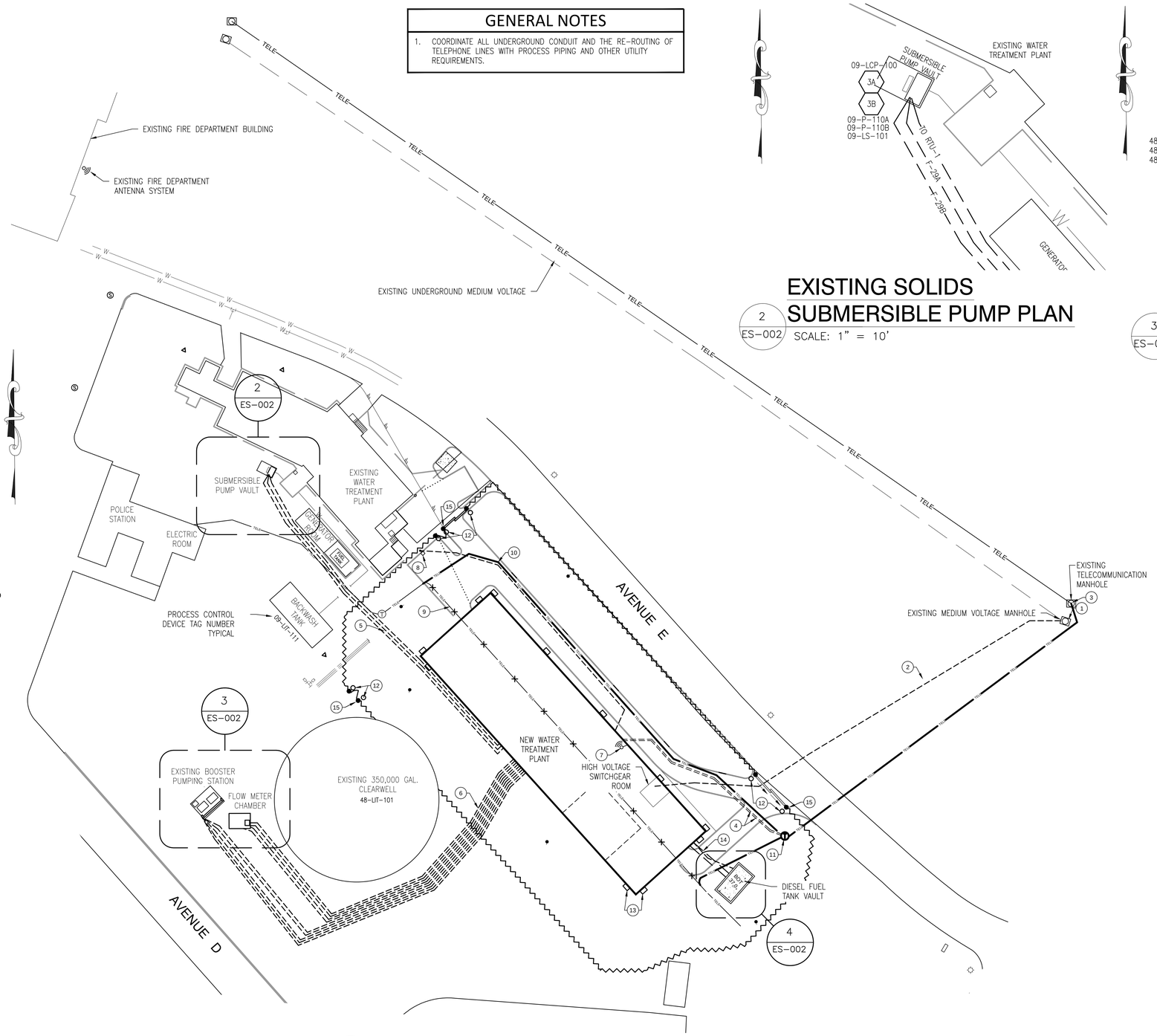

1 ES-002 NEW WATER TREATMENT ELECTRICAL SITE PLAN
SCALE: 1" = 30'

2 ES-002 EXISTING SOLIDS SUBMERSIBLE PUMP PLAN
SCALE: 1" = 10'

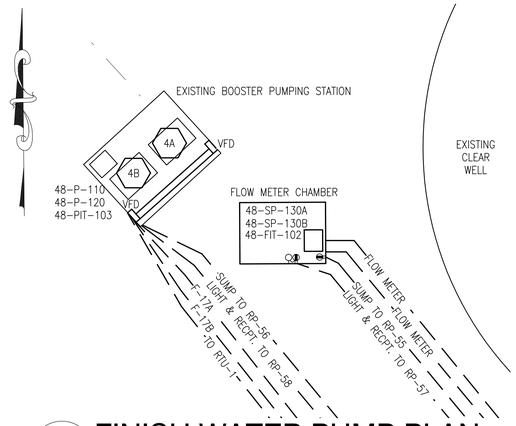

3 ES-002 FINISH WATER PUMP PLAN
SCALE: 1" = 10'

KEYED NOTES

1. SPLICE MEDIUM VOLTAGE 4160V FEEDER IN EXISTING MANHOLE.
2. NEW UNDERGROUND 4160V FEEDER TO ELECTRICAL ROOM SWITCHGEAR. SEE ONE LINE DIAGRAM FOR FEEDER SCHEDULE.
3. EXISTING TELECOMMUNICATIONS MANHOLE.
4. NEW UNDERGROUND FIBER.
5. NEW UNDERGROUND CONDUITS TO SUBMERSIBLE PUMPS
6. NEW UNDERGROUND CONDUITS TO LIFT PUMPS AND FLOW METER CHAMBER.
7. RADIO TRANSMISSION ALARM REPORTING SYSTEM ANTENNA. COMPATIBLE WITH SIGCOM AND EXISTING FIRE ALARM SYSTEM. AIM ANTENNA AT EXISTING FIRE ALARM SYSTEM AT FIRE DEPARTMENT BUILDING.
8. PROVIDE NEW SITE LIGHTING FIXTURE, POLE AND ACCESSORIES. SEE LIGHTING FIXTURE SCHEDULE "S". PROVIDE 2-#10AWG+#10GND IN 3/4" UNDERGROUND SCHEDULE 80 PVC CONDUIT RUN TO CIRCUIT # HVL-19.
9. DEMOLISH AND REROUTE EXISTING TELEPHONE LINES UNDER NEW FOUNDATION
10. NEW REROUTING OF TELEPHONE LINES COORDINATE WITH PROCESS PIPING AND OTHER UTILITIES. 24 STRAND FIBER VERIFY IN FIELD.
11. NEW TELEPHONE MANHOLE RUN FIBER TO EXISTING MANHOLE AS SHOWN.
12. LED SECURITY BOLLARD LIGHT TYPICAL 2 PER GATE. PROVIDE 2-#10AWG+#10GND IN 3/4" UNDERGROUND SCHEDULE 80PVS CONDUIT RUN TO CIRCUIT #HVL-19.
13. LED FLOOD SECURITY LIGHT TYPICAL MOUNTED AT 20' AFF.
14. FUEL OIL SUPPLY AND RETURN IN SECONDARY CONTAINMENT SYSTEM.
15. PACS DEVICES AT GATES

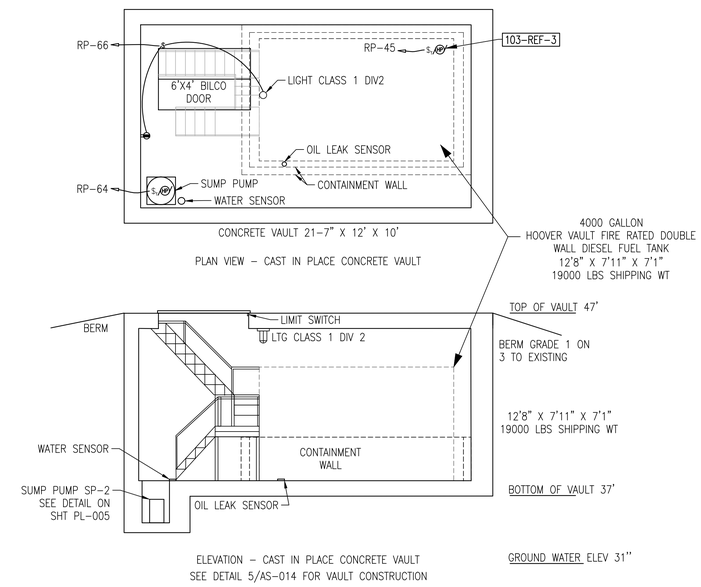

4 ES-002 DIESEL FUEL OIL TANK VAULT PLAN
SCALE: 1/4" = 1'

PROFESSIONAL CERTIFICATION
I HEREBY CERTIFY THAT THESE DOCUMENTS WERE PREPARED OR APPROVED BY ME, AND THAT I AM A DULY LICENSED PROFESSIONAL ENGINEER UNDER THE LAWS OF THE STATE OF MARYLAND, LICENSE NO. 46926, EXPIRATION DATE: 06/11/17

Fully Sprinklered

100% Bid Documents, September 1, 2015

Additions:	Date:
Revisions:	

DCS Infrastructure, LLC
3249 route 112, building 4 suite 1B
Medford, N.Y. 11763 631-320-1706
Hatch Mott MacDonald

STATE OF MARYLAND — MICHAEL J. SEAN BOSTON — REG. NO. 46926 — PROFESSIONAL ENGINEER

Approved:
Approved: Chief, Facilities and Engineering:
Approved: Associate Chief for Maintenance And Operations, Perry Point:
Approved: Engineering Projects Supervisor
Approved: Infection Control Officer

Drawing Title: ELECTRICAL SITE PLAN
Approved: Associate Director for Operations: VAPAHCS PLANNING AND ENGINEERING
Approved: Director, Medical Center:

Project Title: POTABLE WATER SYSTEM IMPROVEMENTS - TIER 1
PERRY POINT MD
VAMC

Scale:	Building No:	Checked:	Drawn:
VARIES	103	MJS	MFM

Location: VAMC PERRY POINT, MD 21902

Date: 9/1/2015
Project No: 512A5-13-329
DRAWING NO: ES-002
63 OF 124

DEPARTMENT OF VETERANS AFFAIRS

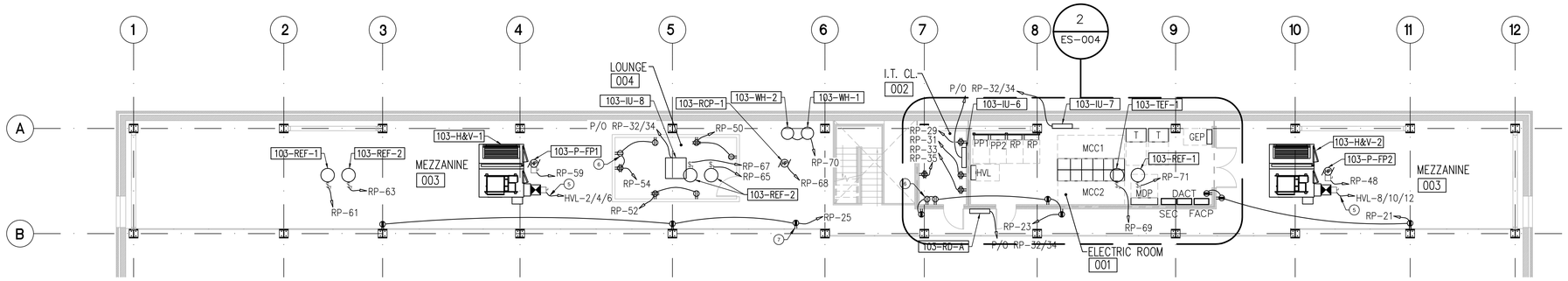

2 ES-003 ELECTRICAL GENERAL POWER PLAN PARTIAL MEZZANINE LEVEL

SCALE: 1/8" = 1'-0"

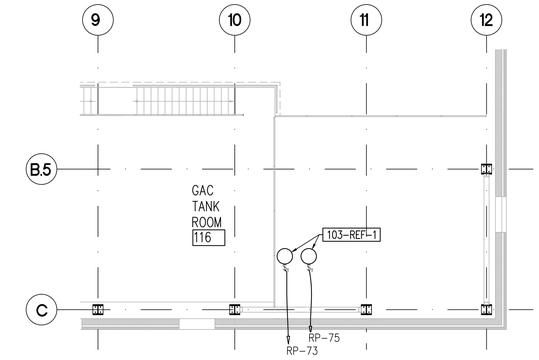

3 ES-003 ELECTRICAL GENERAL POWER PLAN PARTIAL MEZZANINE LEVEL

SCALE: 1/8" = 1'-0"

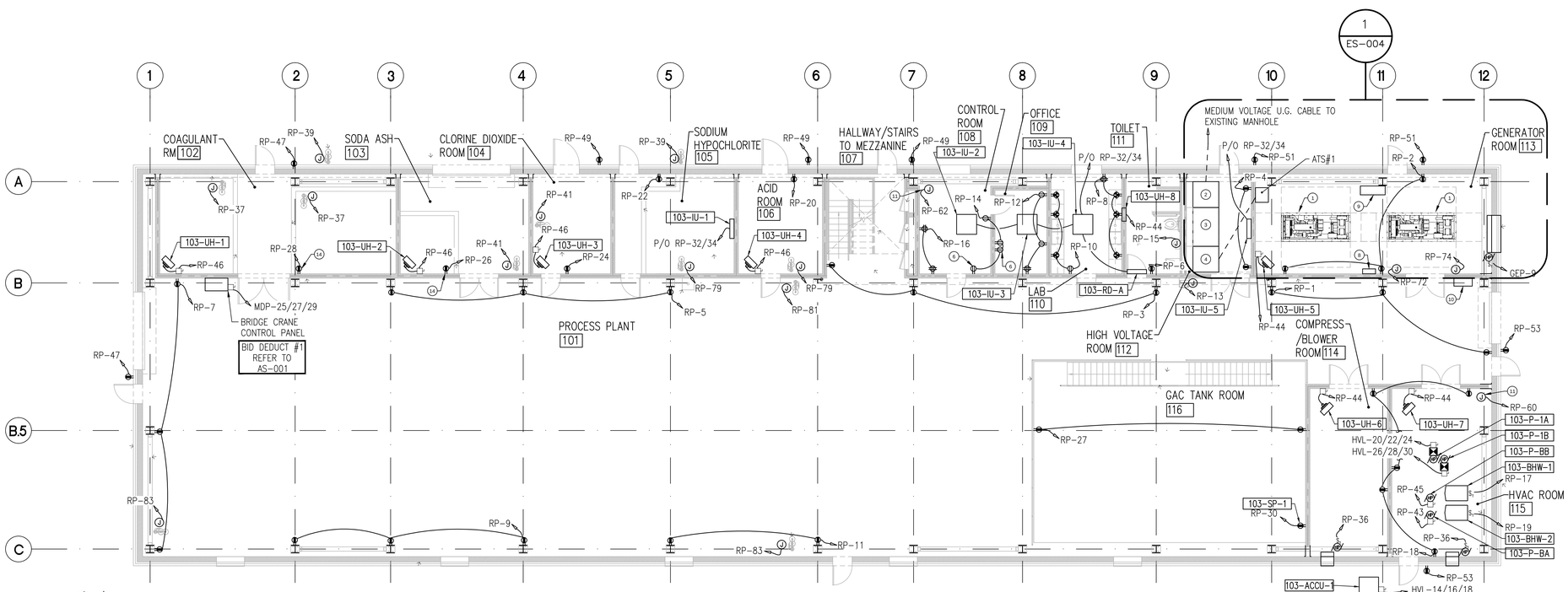

1 ES-003 ELECTRICAL GENERAL POWER PLAN

SCALE: 1/8" = 1'-0"

GENERAL NOTES

1. ALL GENERAL PURPOSE RECEPTACLES SHALL BE WIRED WITH #12 CONDUCTOR.
2. ALL GENERAL PURPOSE RECEPTACLES IN PROCESS PLANT AREA SHALL ALL BE GFCI AND WEATHER PROOF/WET AREA RATED. MOUNTED AT 18" AFF UNO.
3. ALL ELECTRICAL EQUIPMENT IN PROCESS AREA SHALL BE NEMA 4X.
4. ALL CHEMICAL STORAGE ROOMS SHALL BE CLASSIFIED BASE UPON THE CHEMICAL MSDA SHEET ASSOCIATED WITH CHEMICAL BEING STORED. USE APPROPRIATE NEMA RATINGS IN THESE AREAS.
5. ELECTRICAL, HIGH VOLTAGE, GENERATOR, CONTROL, IT, HVAC, OFFICE, LAB, AND TOILET ROOMS SHALL BE NEMA 12 NON-HAZARDOUS AREAS.
6. PVC COATED RIGID GALVANIZED STEEL CONDUIT (ROB-ROY) SHALL BE USED IN THE CHEMICAL STORAGE ROOMS.
7. E.C. SHALL COORDINATE ALL CONDUIT RUNS BELOW AND ABOVE SLAB WITH EACH DISCIPLINE. CONDUIT RUNS SHALL NOT INTERFERE WITH THE OPERATION OF THE BRIDGE CRANE.

KEYED NOTES

1. (2) 250KW GENERATOR, PARALLELED.
2. MEDIUM VOLTAGE SERVICE SWITCH.
3. 4160V TO 480V 500KVA TRANSFORMER
4. 480V SERVICE SWITCH.
5. PROVIDE 3-#10+#10GND IN 3/4" CONDUIT.
6. TV RECEPTACLE MOUNTED AT 84" AFF.
7. RECEPTACLE SHALL BE MOUNTED IN ATTIC SPACE.
8. POWER MANAGER SYSTEM CONTROLLER PARALLELING CONTROLS.
9. 600A MTS.
10. PORTABLE GENERATOR CONNECTION BOX
11. PROVIDE J-BOX FOR MECHANICAL ATC CONTROLS. COORDINATE EXACT LOCATION WITH MECHANICAL TRADE.
12. PROVIDE J-BOX FOR FUEL MAINTENANCE SYSTEM. COORDINATE EXACT LOCATION WITH PLUMBING TRADE.
13. PROVIDE J-BOX FOR FUEL LEAK / LEVEL DETECTION MONITORING SYSTEM. COORDINATE EXACT LOCATION WITH PLUMBING CONTRACTOR
14. MOUNTING HEIGHT AT 48" AFF.

Fully Sprinklered

100% Bid Documents, September 1, 2015

Additions:	Date:
Revisions:	

PROFESSIONAL CERTIFICATION
I HEREBY CERTIFY THAT THESE DOCUMENTS WERE PREPARED OR APPROVED BY ME, AND THAT I AM A DULY LICENSED PROFESSIONAL ENGINEER UNDER THE LAWS OF THE STATE OF MARYLAND, LICENSE NO. 46926, EXPIRATION DATE: 06/11/17.

DCS Infrastructure, LLC
3249 route 112, building 4 suite 1B
Medford, N.Y. 11763 631-320-1706

Hatch Mott MacDonald

STATE OF MARYLAND — MICHAEL JOSEPH SCHIFFER — 46926 — PROFESSIONAL ENGINEER

Approved:

Approved: Chief, Facilities and Engineering:

Approved: Associate Chief for Maintenance And Operations, Perry Point:

Approved: Engineering Projects Supervisor

Approved: Infection Control Officer

Drawing Title: ELECTRICAL GENERAL POWER PLAN

Approved: Associate Director for Operations: VAPAHCS PLANNING AND ENGINEERING

Approved: Director, Medical Center:

Project Title: POTABLE WATER SYSTEM IMPROVEMENTS - TIER 1
PERRY POINT MD
VAMC

Scale:	Building No:	Checked:	Drawn:
1/8" = 1'-0"	103	MJS	MFM

Location: VAMC PERRY POINT, MD 21902

Date: 9/1/2015

Project No: 512A5-13-329

DRAWING NO: ES-003

64 OF 124

DEPARTMENT OF VETERANS AFFAIRS

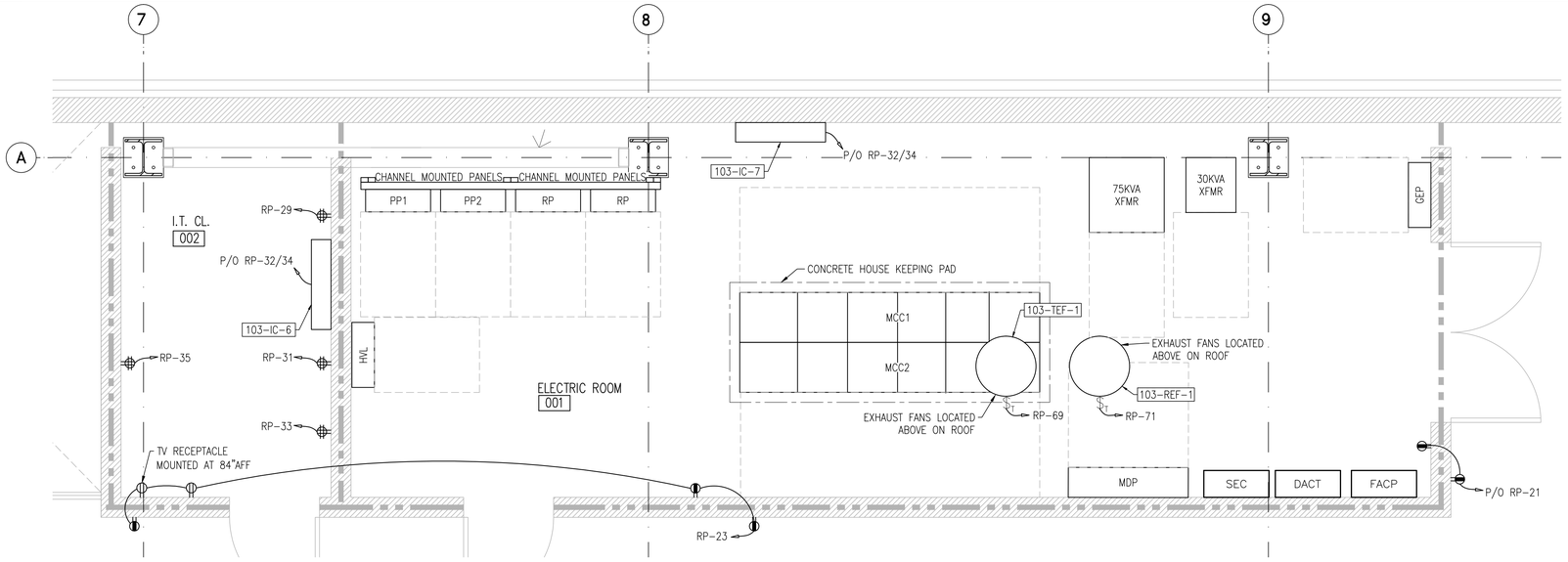

2 / ES-004 ENLARGED ELECTRICAL POWER PLAN PARTIAL MEZZANINE LEVEL

SCALE: 1/2" = 1'-0"

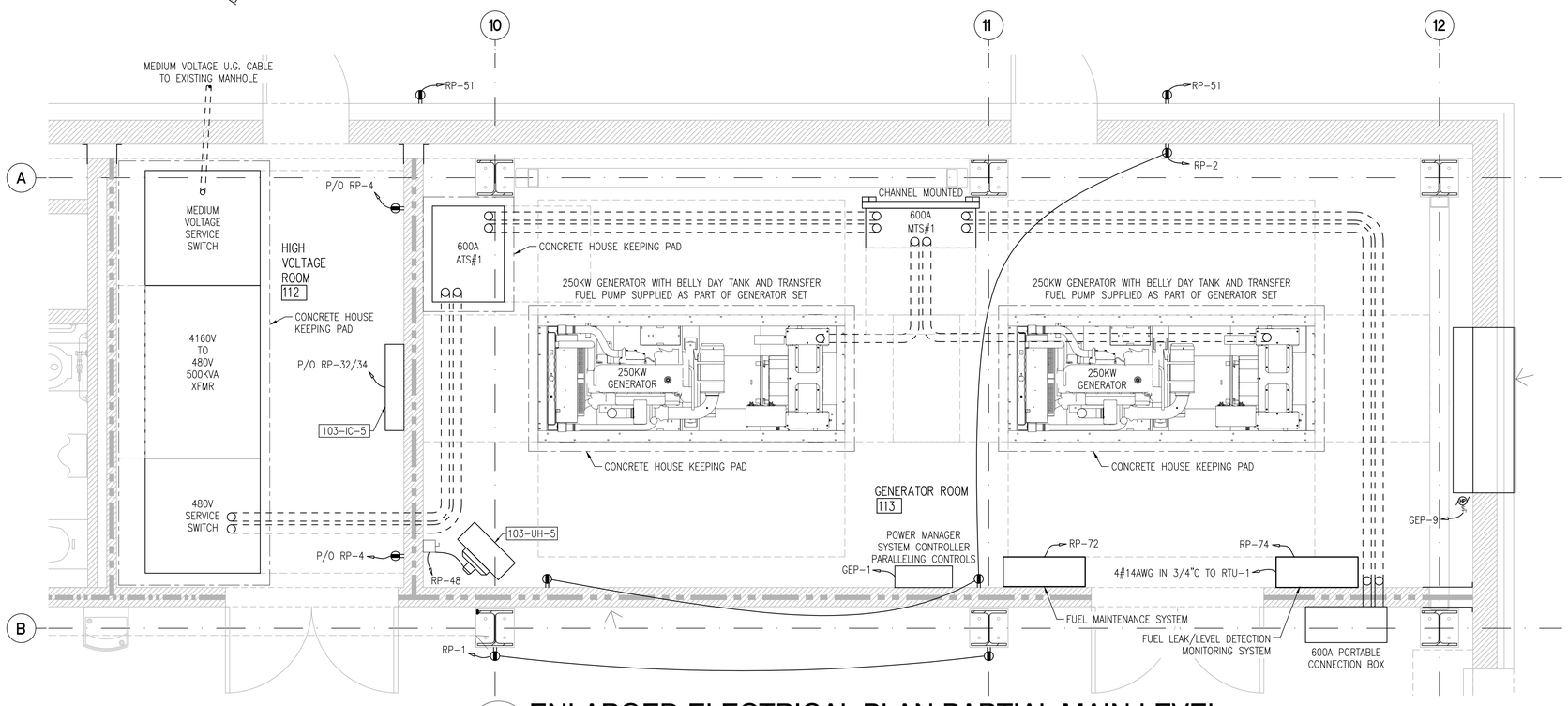

1 / ES-004 ENLARGED ELECTRICAL PLAN PARTIAL MAIN LEVEL

SCALE: 1/2" = 1'-0"

GENERAL NOTES

1. ALL GENERAL PURPOSE RECEPTACLES SHALL BE WIRED WITH #12 CONDUCTOR.
2. ALL GENERAL PURPOSE RECEPTACLES IN ELECTRICAL ROOMS SHALL BE GFCI RATED. MOUNTED AT 18" AFF UNO.
3. ELECTRICAL, HIGH VOLTAGE, GENERATOR, CONTROL, IT, HVAC, OFFICE, LAB, AND TOILET ROOMS SHALL BE NEMA 12 NON-HAZARDOUS AREAS.
4. E.C. SHALL COORDINATE ALL CONDUIT RUNS BELOW AND ABOVE SLAB WITH EACH DISCIPLINE. CONDUIT RUNS SHALL NOT INTERFERE WITH THE OPERATION OF THE BRIDGE CRANE.

Fully Sprinklered

100% Bid Documents, September 1, 2015

PROFESSIONAL CERTIFICATION
I HEREBY CERTIFY THAT THESE DOCUMENTS WERE PREPARED OR APPROVED BY ME, AND THAT I AM A DULY LICENSED PROFESSIONAL ENGINEER UNDER THE LAWS OF THE STATE OF MARYLAND, LICENSE NO. 46926, EXPIRATION DATE: 06/11/17

Additions:	Date:
Revisions:	

DCS Infrastructure, LLC
3249 route 112, building 4 suite 1B
Medford, N.Y. 11763
631-320-1706
Hatch Mott MacDonald

STATE OF MARYLAND — MICHAEL JEAN SCHOTTLAND — No. 46926 — PROFESSIONAL ENGINEER

Approved:	Approved: Chief, Facilities and Engineering:
	Approved: Associate Chief for Maintenance And Operations, Perry Point:
	Approved: Engineering Projects Supervisor
	Approved: Infection Control Officer

Drawing Title: ELECTRICAL ENLARGED POWER PLAN

Approved: Associate Director for Operations: VAPAHCS PLANNING AND ENGINEERING

Approved: Director, Medical Center:

Project Title: POTABLE WATER SYSTEM IMPROVEMENTS - TIER 1
PERRY POINT MD
VAMC

Location: VAMC PERRY POINT, MD 21902

Scale:	Building No:	Checked:	Drawn:
1/8" = 1'-0"	103	MJS	MFM

Date: 9/1/2015

Project No: 512A5-13-329

DRAWING NO: ES-004

65 OF 124

DEPARTMENT OF VETERANS AFFAIRS

TAG	DESCRIPTION	FEEDER #	OVER CURRENT PROTECTION	# CABLES	CONDUCTOR SIZE	GROUND SIZE	CONDUIT SIZE	CONDUIT TYPE	TERMINATION	REMARKS
1	AIR STRAINER 1	PP1-1	20A	2	12	12	3/4"	RGS &/OR ROB-ROY	J BOX & LIQUID TIGHT	NONE
1	AIR STRAINER 2	PP2-1	20A	2	12	12	3/4"	RGS &/OR ROB-ROY	J BOX & LIQUID TIGHT	NONE
2	CORROSIVE INHIBITOR FEED PUMP 1	PP1-2	20A	2	12	12	3/4"	RGS &/OR ROB-ROY	J BOX & FLEX	NONE
2	CORROSIVE INHIBITOR FEED PUMP 2	PP2-2	20A	2	12	12	3/4"	RGS &/OR ROB-ROY	J BOX & FLEX	NONE
3	AIR DRIER 1	PP1-3	20A	2	12	12	3/4"	RGS	J BOX & FLEX	NONE
3	AIR DRIER 2	PP2-3	20A	2	12	12	3/4"	RGS	J BOX & FLEX	NONE
4	CITRIC ACID FEED PUMP 1	PP1-4	20A	2	12	12	3/4"	RGS &/OR ROB-ROY	J BOX & FLEX	NONE
5	POLYALUMINUM CHLORIDE FEED PUMP 1	PP1-5	20A	2	12	12	3/4"	RGS &/OR ROB-ROY	J BOX & FLEX	NONE
5	POLYALUMINUM CHLORIDE FEED PUMP 2	PP2-5	20A	2	12	12	3/4"	RGS &/OR ROB-ROY	J BOX & FLEX	NONE
6	SODIUM BISULFATE FEED PUMP 1	PP1-6	20A	2	12	12	3/4"	RGS &/OR ROB-ROY	J BOX & FLEX	NONE
6	SODIUM BISULFATE FEED PUMP 2	PP2-6	20A	2	12	12	3/4"	RGS &/OR ROB-ROY	J BOX & FLEX	NONE
7	POLYALUMINUM ISO VALVE	PP1-7	20A	2	12	12	3/4"	RGS &/OR ROB-ROY	J BOX & FLEX	NONE
8	HYDROCHLORIDE ACID FEED PUMP 1	PP1-8	20A	2	12	12	3/4"	RGS &/OR ROB-ROY	J BOX & FLEX	NONE
9	ALUMINUM SULFATE FEED PUMP 1	PP1-9	20A	2	12	12	3/4"	RGS &/OR ROB-ROY	J BOX & FLEX	NONE
9	ALUMINUM SULFATE FEED PUMP 2	PP2-9	20A	2	12	12	3/4"	RGS &/OR ROB-ROY	J BOX & FLEX	NONE
10	CHLORINE DIOXIDE GEN SKID	PP1-10	20A	2	12	12	3/4"	RGS &/OR ROB-ROY	J BOX & FLEX	NONE
11	ALUMINUM SULFATE ISO VALVE	PP1-11	20A	2	12	12	3/4"	RGS &/OR ROB-ROY	J BOX & FLEX	NONE
13	SODA ASH PREP SYSTEM	PP1-13	20A	2	12	12	3/4"	RGS &/OR ROB-ROY	J BOX & FLEX	NONE
15	SODA ASH DUST COLLECTOR	PP1-15	20A	2	12	12	3/4"	RGS &/OR ROB-ROY	J BOX & FLEX	NONE
16	CLARIFICATION TRAIN 1 INLET SAMPLE PUMP	PP1-16	20A	2	12	12	3/4"	RGS &/OR ROB-ROY	J BOX & LIQUID TIGHT	NONE
16	CLARIFICATION TRAIN 2 INLET SAMPLE PUMP	PP2-16	20A	2	12	12	3/4"	RGS &/OR ROB-ROY	J BOX & LIQUID TIGHT	NONE

TAG	DESCRIPTION	FEEDER #	OVER CURRENT PROTECTION	# CABLES	CONDUCTOR SIZE	GROUND SIZE	CONDUIT SIZE	CONDUIT TYPE	TERMINATION	REMARKS
17	SODA ASH FEED PUMP 1	PP1-17	20A	2	12	12	3/4"	RGS &/OR ROB-ROY	J BOX & FLEX	NONE
17	SODA ASH FEED PUMP 2	PP2-17	20A	2	12	12	3/4"	RGS &/OR ROB-ROY	J BOX & FLEX	NONE
18	MEMBRANE EQ SAMPLE PUMP	PP1-18	20A	2	12	12	3/4"	RGS &/OR ROB-ROY	J BOX & LIQUID TIGHT	NONE
19	SODIUM HYPCLORIDE FEED PUMP 1	PP1-19	20A	2	12	12	3/4"	RGS &/OR ROB-ROY	J BOX & FLEX	NONE
19	SODIUM HYPCLORIDE FEED PUMP 2	PP2-19	20A	2	12	12	3/4"	RGS &/OR ROB-ROY	J BOX & FLEX	NONE
20	PRE-CLEARWELL SAMPLE PUMP	PP1-20	20A	2	12	12	3/4"	RGS &/OR ROB-ROY	J BOX & LIQUID TIGHT	NONE
21	SODIUM HYPCLORIDE FEED PUMP 3	PP1-21	20A	2	12	12	3/4"	RGS &/OR ROB-ROY	J BOX & FLEX	NONE
21	SODIUM HYPCLORIDE FEED PUMP 4	PP2-21	20A	2	12	12	3/4"	RGS &/OR ROB-ROY	J BOX & FLEX	NONE
22	POST-CLEARWELL SAMPLE PUMP	PP1-22	20A	2	12	12	3/4"	RGS &/OR ROB-ROY	J BOX & LIQUID TIGHT	NONE
23	SODIUM HYPCLORIDE FEED PUMP 5	PP1-23	20A	2	12	12	3/4"	RGS &/OR ROB-ROY	J BOX & FLEX	NONE
23	SODIUM HYPCLORIDE FEED PUMP 6	PP2-23	20A	2	12	12	3/4"	RGS &/OR ROB-ROY	J BOX & FLEX	NONE
24	RTU-1 CONTROL PANEL	PP1-24	20A	2	12	12	3/4"	RGS	HARDWIRE	NONE
24	RTU-2 CONTROL PANEL	PP2-24	20A	2	12	12	3/4"	RGS	HARDWIRE	NONE
25	SODIUM HYPCLORIDE FEED PUMP 7	PP1-25	20A	2	12	12	3/4"	RGS &/OR ROB-ROY	J BOX & FLEX	NONE
26	RIO-2-1	PP1-26	20A	2	12	12	3/4"	RGS &/OR ROB-ROY	HARDWIRE	NONE
26	RIO-2-2	PP2-26	20A	2	12	12	3/4"	RGS &/OR ROB-ROY	HARDWIRE	NONE
27	SODIUM HYPCLORIDE ISO VALVE	PP1-27	20A	2	12	12	3/4"	RGS &/OR ROB-ROY	J BOX & FLEX	NONE
28	RIO-2-3	PP1-28	20A	2	12	12	3/4"	RGS &/OR ROB-ROY	HARDWIRE	NONE
29	MAGNETIC FLOW METER	PP1-29	20A	2	12	12	3/4"	RGS &/OR ROB-ROY	J BOX & FLEX	NONE
29	MAGNETIC FLOW METER	PP2-29	20A	2	12	12	3/4"	RGS &/OR ROB-ROY	J BOX & FLEX	NONE
30	BACKWASH EQUIPMENT	PP1-30	20A	2	12	12	3/4"	RGS &/OR ROB-ROY	J BOX & FLEX	NONE

TAG	DESCRIPTION	FEEDER #	REMARKS	POWER INFORMATION
1A	FLOCK DRIVER 1	F-14	NONE	SEE ONE LINE DIAGRAM ES-113
1B	FLOCK DRIVER 2	F-14	NONE	
1A	SLUDGE COLLECTOR 1	F-15	NONE	
2B	SLUDGE COLLECTOR 2	F-15	NONE	
3A	EXISTING SOLIDS SUBMERSIBLE PUMP 1	F-29	NONE	
3B	EXISTING SOLIDS SUBMERSIBLE PUMP 2	F-28	NONE	
4A	HIGH LIFT PUMP 1	F-17	NONE	
4B	HIGH LIFT PUMP 2	F-17	NONE	
5A	CIP PUMP 1	F-18	NONE	
5B	CIP PUMP 2	F-18	NONE	
6A	IN LINE MIXER 1	F-19	NONE	
6B	IN LINE MIXER 2	F-19	NONE	
7	POLYALUMINUM CHLORIDE RECIRC/TRANS PUMP	F-20	NONE	
8	ALUMINUM SULFATE RECIRC/TRANS PUMP	F-21	NONE	
9A	FILTRATE / FEED PUMP 1	F-22	NONE	
9B	FILTRATE / FEED PUMP 2	F-22	NONE	
10A	AERATION BLOWER 1	F-23	NONE	
10B	AERATION BLOWER 2	F-23	NONE	
11	DUPLEX AIR COMPRESSOR	F-24	NONE	
12A	BACKWASH PUMP 1	F-25	NONE	
12B	BACKWASH PUMP 2	F-25	NONE	
13A	SODIUM HYPCLORITE RECEIRC/TRANS PUMP 1	F-26	NONE	
13B	SODIUM HYPCLORITE RECEIRC/TRANS PUMP 2	F-26	NONE	
14A	SLUDGE PUMP 1	F-27	NONE	
14B	SLUDGE PUMP 2	F-27	NONE	

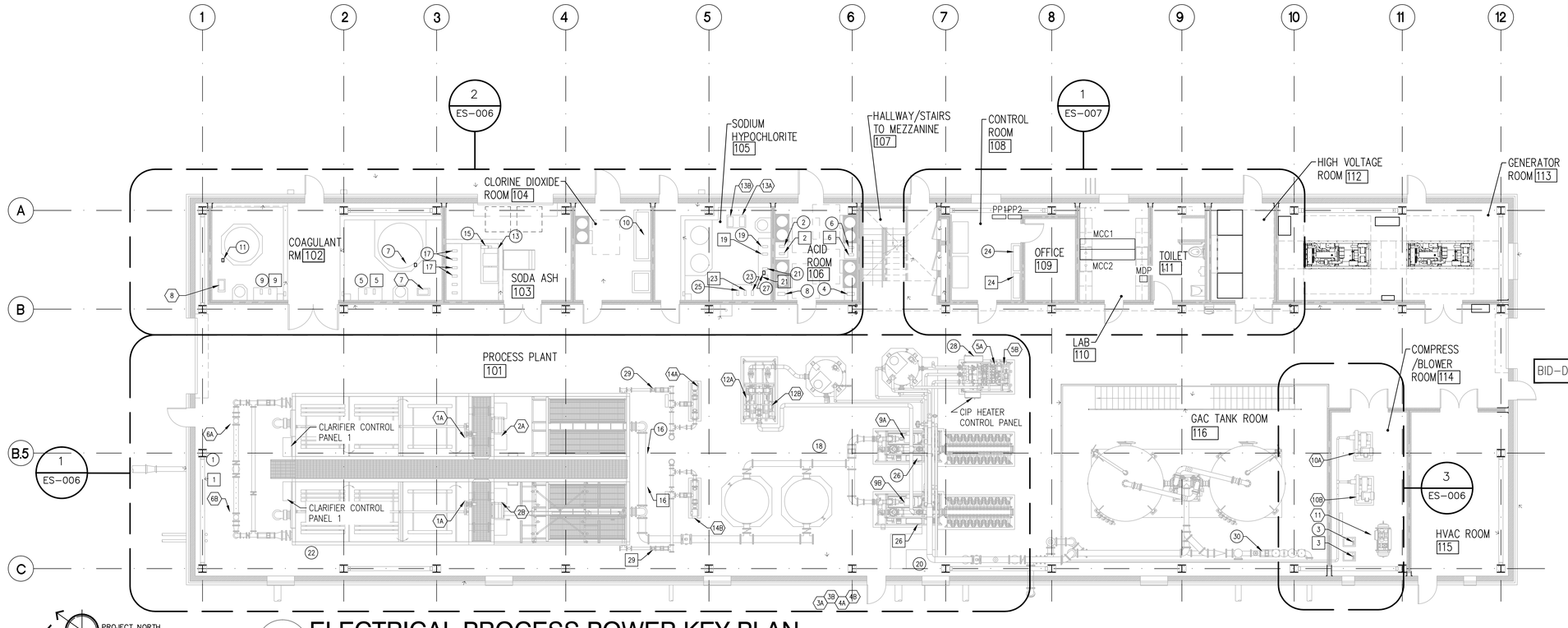

BID-DEDUCT #3

GENERAL NOTES

1. ALL ELECTRICAL EQUIPMENT IN PROCESS AREA SHALL BE NEMA 4X.
2. ALL CHEMICAL STORAGE ROOMS SHALL BE CLASSIFIED BASE UPON THE CHEMICAL MSDA SHEET ASSOCIATED WITH CHEMICAL BEING STORED. USE APPROPRIATE NEMA RATINGS IN THESE AREAS.
3. ELECTRICAL, HIGH VOLTAGE, GENERATOR, CONTROL, IT, HVAC, OFFICE, LAB, AND TOILET ROOMS SHALL BE NEMA 12 NON-HAZARDOUS AREAS.
4. PVC COATED RIGID GALVANIZED STEEL CONDUIT (ROB-ROY) SHALL BE USE IN THE CHEMICAL STORAGE ROOMS.
5. E.C. SHALL COORDINATE ALL CONDUIT RUNS BELOW AND ABOVE SLAB WITH EACH DISCIPLINE. E.C. TO COORDINATE EXACT LOCATION OF STUB UP LOCATIONS WITH PROCESS EQUIPMENT MANUFACTURER'S EQUIPMENT RECOMMENDATIONS.
6. CONDUIT ROUTING IS FOR INFORMATIONAL PURPOSE ONLY. ALL ROUTING SHALL BE COORDINATED IN FIELD AND NOTED ON AS-BUILTS. E.C. MAY COMBINE HOME RUNS IN THE SAME CONDUIT PER NEC AND DERATED CODES.

1 ES-005 ELECTRICAL PROCESS POWER KEY PLAN

SCALE: 1/8" = 1'-0"

PROFESSIONAL CERTIFICATION
I HEREBY CERTIFY THAT THESE DOCUMENTS WERE PREPARED OR APPROVED BY ME, AND THAT I AM A DULY LICENSED PROFESSIONAL ENGINEER UNDER THE LAWS OF THE STATE OF MARYLAND, LICENSE NO. 46926, EXPIRATION DATE: 06/11/17

Fully Sprinklered

100% Bid Documents, September 1, 2015

Additions: Date:

Revisions:

DCS Infrastructure, LLC
3249 route 112, building 4 suite 1B
Medford, N.Y. 11763 631-320-1706

Hatch Mott MacDonald

STATE OF MARYLAND — STEVEN A. TYLER — No. 46926 — PROFESSIONAL ENGINEER

Approved:

Approved: Chief, Facilities and Engineering:

Approved: Associate Chief for Maintenance And Operations, Perry Point:

Approved: Engineering Projects Supervisor

Approved: Infection Control Officer

Drawing Title: ELECTRICAL PROCESS POWER PLAN 1 OF 3

Approved: Associate Director for Operations: VAPAHCS PLANNING AND ENGINEERING

Approved: Director, Medical Center:

Project Title: POTABLE WATER SYSTEM IMPROVEMENTS - TIER 1
PERRY POINT MD
VAMC

Location: VAMC PERRY POINT, MD 21902

Scale:	Building No:	Checked:	Drawn:
VARIES	103	MJS	MFM

Date: 9/1/2015

Project No: 512A5-13-329

DRAWING NO: ES-005

66 OF 124

DEPARTMENT OF VETERANS AFFAIRS

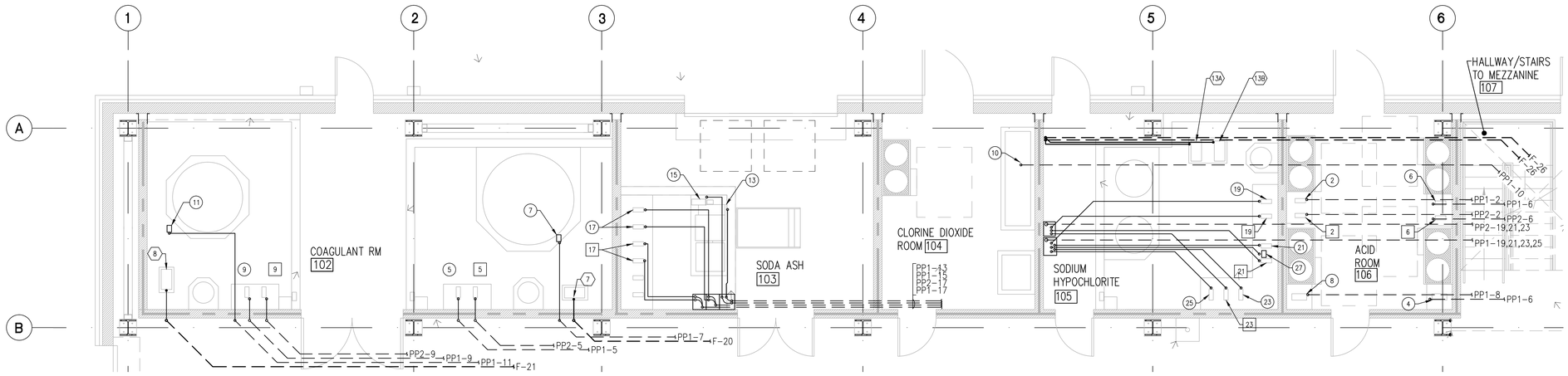

2 ES-006 ELECTRICAL PROCESS POWER PLAN ENLARGED AREAS

SCALE: 1/4" = 1'-0"

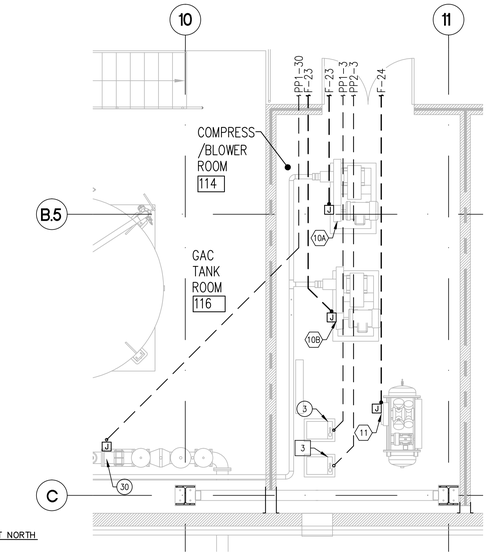

3 ES-006 ELECTRICAL PROCESS POWER PLAN ENLARGED AREAS

SCALE: 1/4" = 1'-0"

GENERAL NOTE:

CONDUIT ROUTING IS FOR INFORMATIONAL PURPOSE ONLY. ALL ROUTING SHALL BE COORDINATED IN FIELD AND NOTED ON AS-BUILTS. E.C. MAY COMBINE HOME RUNS IN THE SAME CONDUIT PER NEC AND DERATING CODES.

(#) REFER TO ES-004 FOR EQUIPMENT SCHEDULE

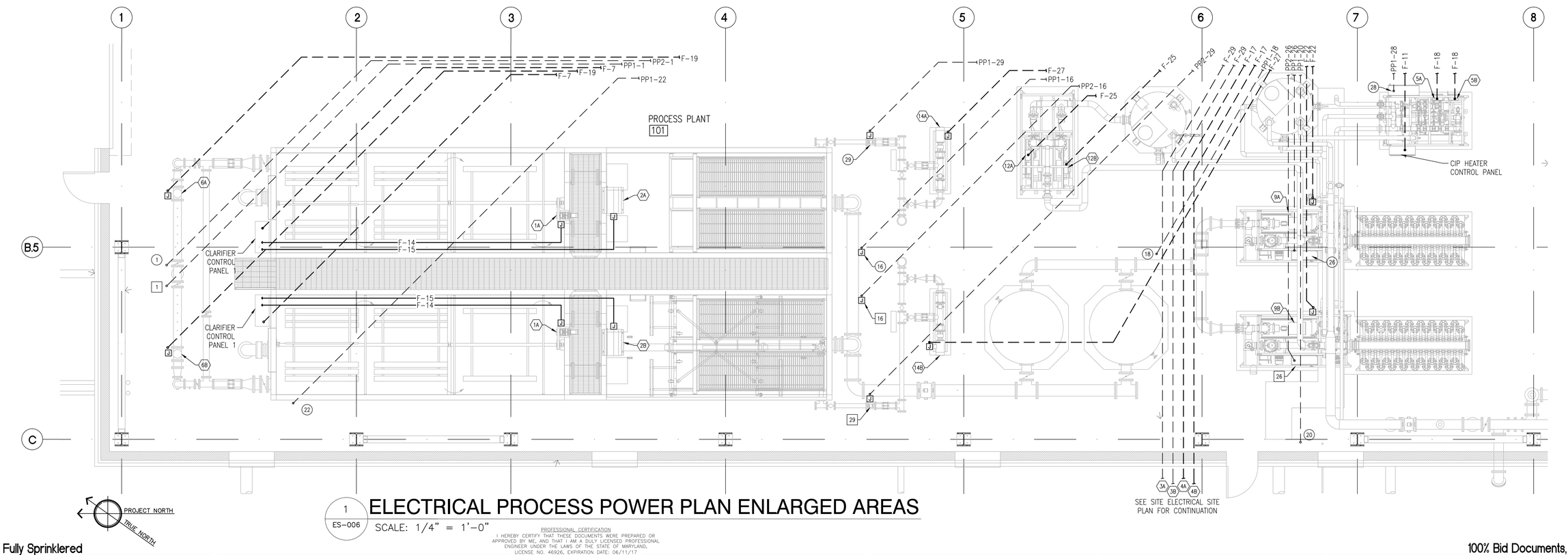

1 ES-006 ELECTRICAL PROCESS POWER PLAN ENLARGED AREAS

SCALE: 1/4" = 1'-0"

PROFESSIONAL CERTIFICATION

I HEREBY CERTIFY THAT THESE DOCUMENTS WERE PREPARED OR APPROVED BY ME, AND THAT I AM A DULY LICENSED PROFESSIONAL ENGINEER UNDER THE LAWS OF THE STATE OF MARYLAND, LICENSE NO. 46926, EXPIRATION DATE: 06/11/17

Fully Sprinklered

100% Bid Documents, September 1, 2015

Additions:	Date:
Revisions:	

DCS Infrastructure, LLC
3249 route 112, building 4 suite 1B
Medford, N.Y. 11763 631-320-1706

Hatch Mott MacDonald

STATE OF MARYLAND — MICHAEL JEAN MOSTYN — REGISTRATION NUMBER 46926 — PROFESSIONAL ENGINEER

Approved:

Approved: Chief, Facilities and Engineering:

Approved: Associate Chief for Maintenance And Operations, Perry Point:

Approved: Engineering Projects Supervisor

Approved: Infection Control Officer

Drawing Title: ELECTRICAL PROCESS POWER PLAN 2 OF 3

Approved: Associate Director for Operations: VAPAHCS PLANNING AND ENGINEERING

Approved: Director, Medical Center:

Project Title: POTABLE WATER SYSTEM IMPROVEMENTS - TIER 1
PERRY POINT MD
VAMC

Scale: 1/4" = 1'-0" | Building No: 103 | Checked: MJS | Drawn: MFM

Location: VAMC PERRY POINT, MD 21902

Date: 9/1/2015

Project No: 512A5-13-329

DRAWING NO: ES-006

67 OF 124

DEPARTMENT OF VETERANS AFFAIRS

GENERAL NOTE:

CONDUIT ROUTING IS FOR INFORMATIONAL PURPOSE ONLY. ALL ROUTING SHALL BE COORDINATED IN FIELD AND NOTED ON AS-BUILTS. E.C. MAY COMBINE HOME RUNS IN THE SAME CONDUIT PER NEC AND DERATING CODES. SIZE OF PULL BOX SHALL BE IN ADHERENCE TO NEC.

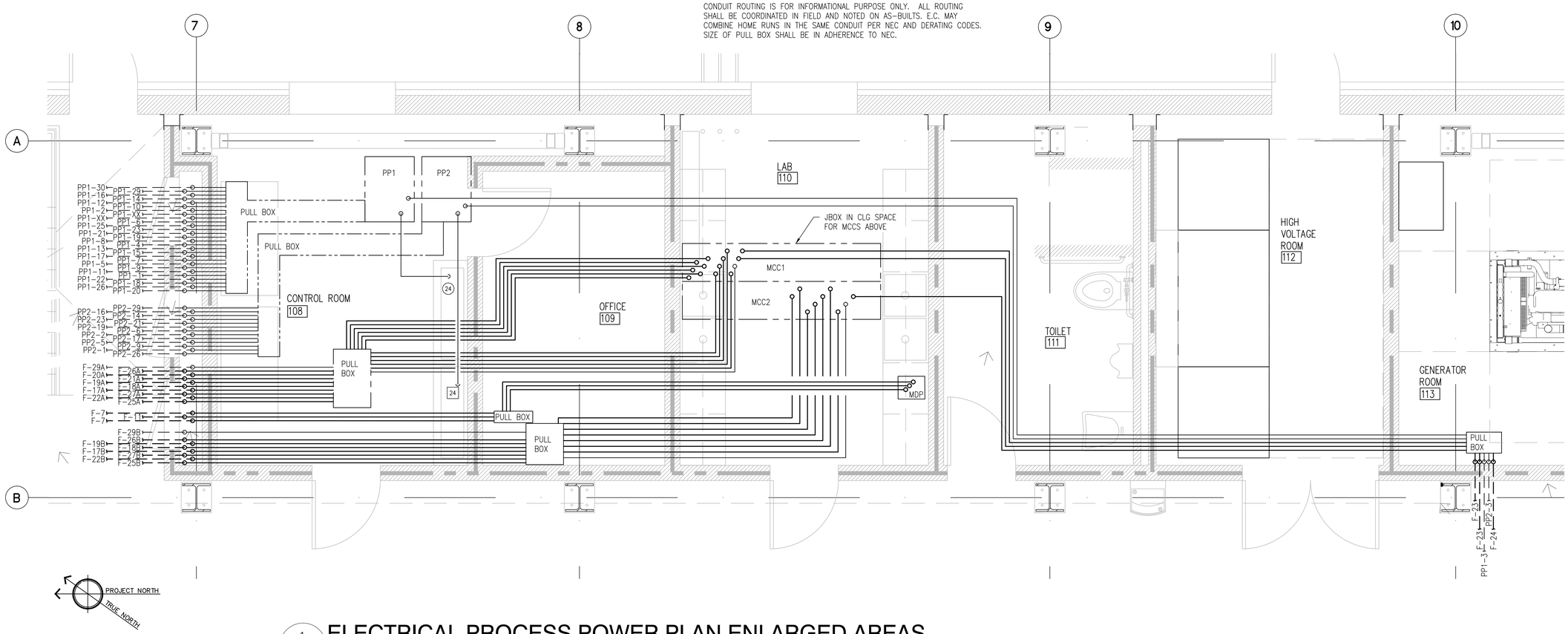

PROJECT NORTH
TRUE NORTH

1 ES-007 ELECTRICAL PROCESS POWER PLAN ENLARGED AREAS

SCALE: 1/2" = 1'-0"

Fully Sprinklered

100% Bid Documents, September 1, 2015

Additions:	Date:
Revisions:	

PROFESSIONAL CERTIFICATION
I HEREBY CERTIFY THAT THESE DOCUMENTS WERE PREPARED OR APPROVED BY ME, AND THAT I AM A DULY LICENSED PROFESSIONAL ENGINEER UNDER THE LAWS OF THE STATE OF MARYLAND, LICENSE NO. 46926, EXPIRATION DATE: 06/11/17

DCS Infrastructure, LLC
3249 route 112, building 4 suite 1B
Medford, N.Y. 11763 631-320-1706

Hatch Mott MacDonald

STATE OF MARYLAND — JOSEPH GREGORY DONOHUE — 46926 — PROFESSIONAL ENGINEER

Approved:	Approved: Chief, Facilities and Engineering:
	Approved: Associate Chief for Maintenance And Operations, Perry Point:
	Approved: Engineering Projects Supervisor
	Approved: Infection Control Officer

Drawing Title: ELECTRICAL PROCESS POWER PLAN 3 OF 3

Approved: Associate Director for Operations: VAPAHCS PLANNING AND ENGINEERING

Approved: Director, Medical Center:

Project Title: POTABLE WATER SYSTEM IMPROVEMENTS - TIER 1
PERRY POINT MD
VAMC

Scale:	Building No:	Checked:	Drawn:
VARIES	103	MJS	MFM

Location: VAMC PERRY POINT, MD 21902

Date: 9/1/2015

Project No: 512A5-13-329

DRAWING NO: ES-007

68 OF 124

DEPARTMENT OF VETERANS AFFAIRS

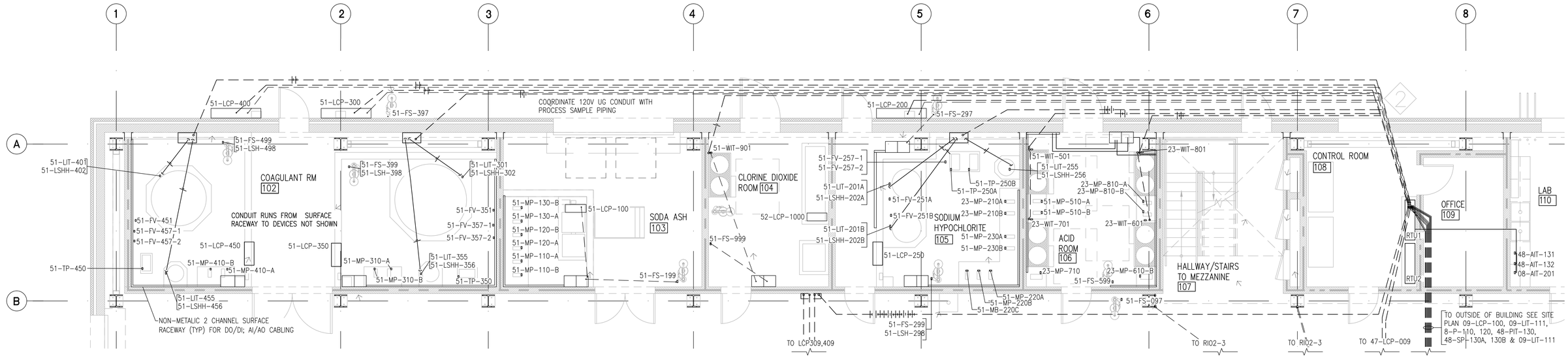

2 ES-008

ELECTRICAL PROCESS CONTROL PLAN ENLARGED AREAS

SCALE: 1/4" = 1'-0"

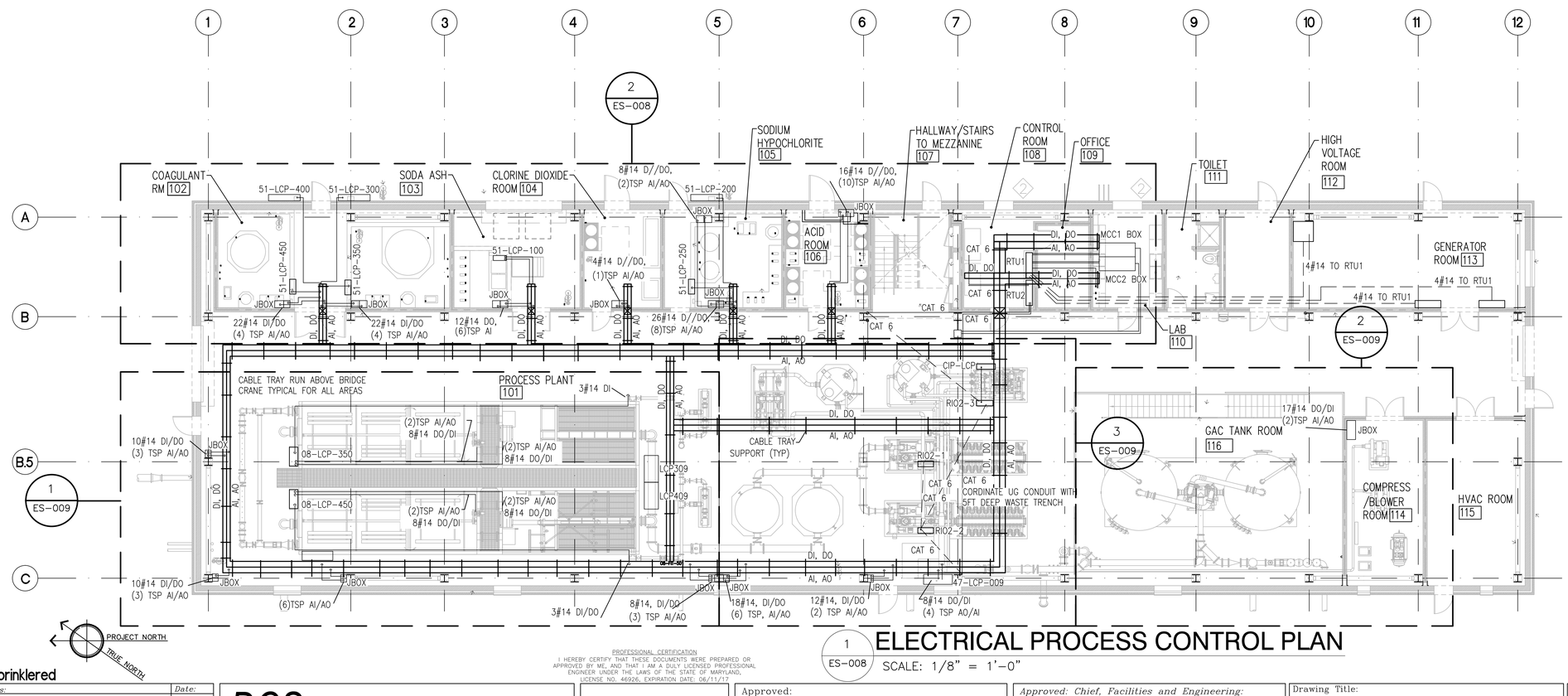

1 ES-008

ELECTRICAL PROCESS CONTROL PLAN

SCALE: 1/8" = 1'-0"

LOW VOLTAGE CABLING

RTU1 TO MCC1 43#14 DI/DO 4#18TSP AI/AO	MCC1 TO 08-LCP-350 8#14 , 1#14 EG
RTU1 TO MCC2 24#14 DI/DO 4#18TSP AI/AO	MCC2 TO 08-LCP-450 8#14 , 1#14 EG
RTU1 TO 51-LCP-100 18#14 DI/DO	RIO2-1 TO MCC1 6#14 DI/DO (2) TSP AI/AO
RTU1 TO 51-LCP-200 8#14 DI/DO	RIO2-2 TO MCC2 6#14 DI/DO (2) TSP AI/AO
RTU1 TO 51-LCP-300 8#14 DI/DO	RIO2-3 TO CIP-LCP 4#14 DI/DO
RTU1 TO 51-LCP-400 8#14 DI/DO	RIO2-3 TO MCC1 16#14 (2) TSP AI/AO
RTU1 TO 51-LCP-250 4#14 DI/DO	RIO2-3 TO MCC2 16#14 (2) TSP AI/AO
RTU1 TO 51-LCP-350 4#14 DI/DO	
RTU1 TO 51-LCP-450 4#14 DI/DO	
RTU1 TO GEN SET/ATS 8#14 DI/DO	

LEGEND

- PROCESS 120V CONTROL SIGNAL IN SLAB
- PROCESS 120V CONTROL SIGNAL ABOVE SLAB
- PROCESS LV POWER IN SLAB
- PROCESS LV POWER ABOVE SLAB
- TWO CHANNEL CABLE TRAY
- TWO CHANNEL CABLE TRAY TRANSITION UP/DOWN
- TWO CHANNEL NON-METALIC SURFACE RACEWAY
- CONTROL DEVICE/SENSOR

GENERAL NOTES

1. CONTROL CABLES, CABLE TRAY, CONDUIT AND TERMINATIONS ARE PART OF THE ELECTRICAL DIV 26 SCOPE OF WORK.
2. DEVICES, SENSORS, RTU, ETC ARE PROCESS VENDOR SCOPE OF WORK.
3. CONDUIT RUNS AS SHOWN ARE DIAGRAMMATIC.
4. CONTRACTOR CAN COMBINE WHILE MAINTAINING DI/DO, AI/AO, AND 120V SEPARATION.
5. COORDINATE EXACT LOCATION AND QUANTITY OF CONTROL CONDUIT IN FIELD.

Fully Sprinklered

100% Bid Documents, September 1, 2015

Additions:	Date:
Revisions:	

DCS Infrastructure, LLC
3249 route 112, building 4 suite 1B
Medford, N.Y. 11763 631-320-1706
Hatch Mott MacDonald

PROFESSIONAL CERTIFICATION
I HEREBY CERTIFY THAT THESE DOCUMENTS WERE PREPARED OR APPROVED BY ME, AND THAT I AM A DULY LICENSED PROFESSIONAL ENGINEER UNDER THE LAWS OF THE STATE OF MARYLAND, LICENSE NO. 46926, EXPIRATION DATE: 06/11/17

STATE OF MARYLAND — JOSEPH GREGORY DOBOSZ — No. 46926 — PROFESSIONAL ENGINEER

Approved:
Approved: Chief, Facilities and Engineering:
Approved: Associate Chief for Maintenance And Operations, Perry Point:
Approved: Engineering Projects Supervisor
Approved: Infection Control Officer

Drawing Title: ELECTRICAL PROCESS CONTROL PLAN 1 of 2

Approved: Associate Director for Operations: VAPAHCS PLANNING AND ENGINEERING

Approved: Director, Medical Center:

Project Title: POTABLE WATER SYSTEM IMPROVEMENTS - TIER 1
PERRY POINT MD
VAMC

Location: VAMC PERRY POINT, MD 21902

Scale:	Building No:	Checked:	Drawn:
VARIES	103	MJS	MJS

Date: 9/1/2015
Project No: 512A5-13-329
DRAWING NO: ES-008
69 OF 124

DEPARTMENT OF VETERANS AFFAIRS

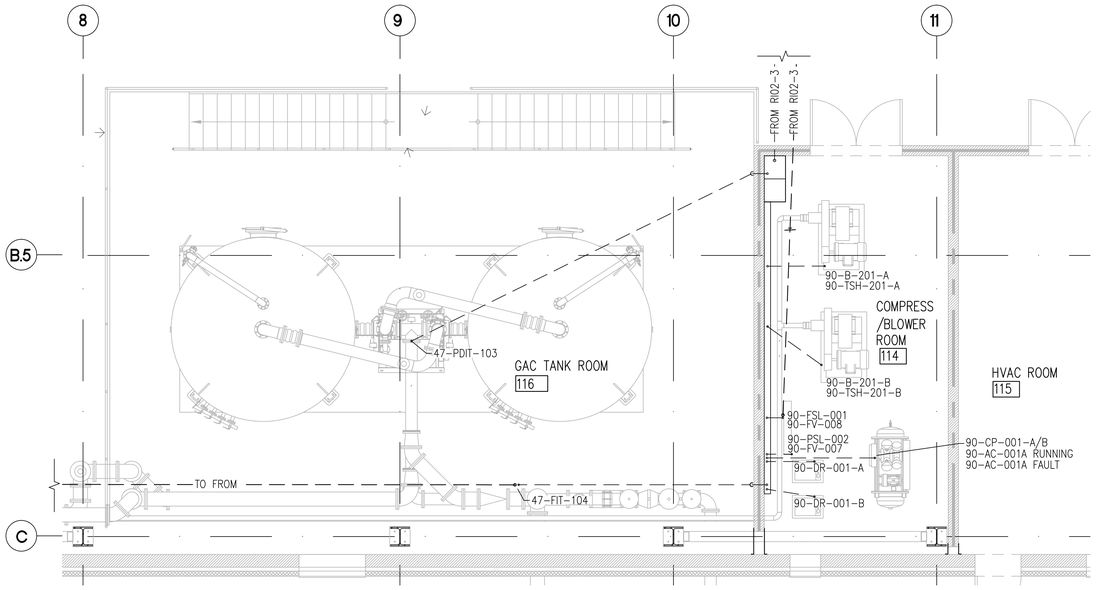

2 ES-009 ELECTRICAL PROCESS POWER PLAN ENLARGED AREAS

SCALE: 1/4" = 1'-0"

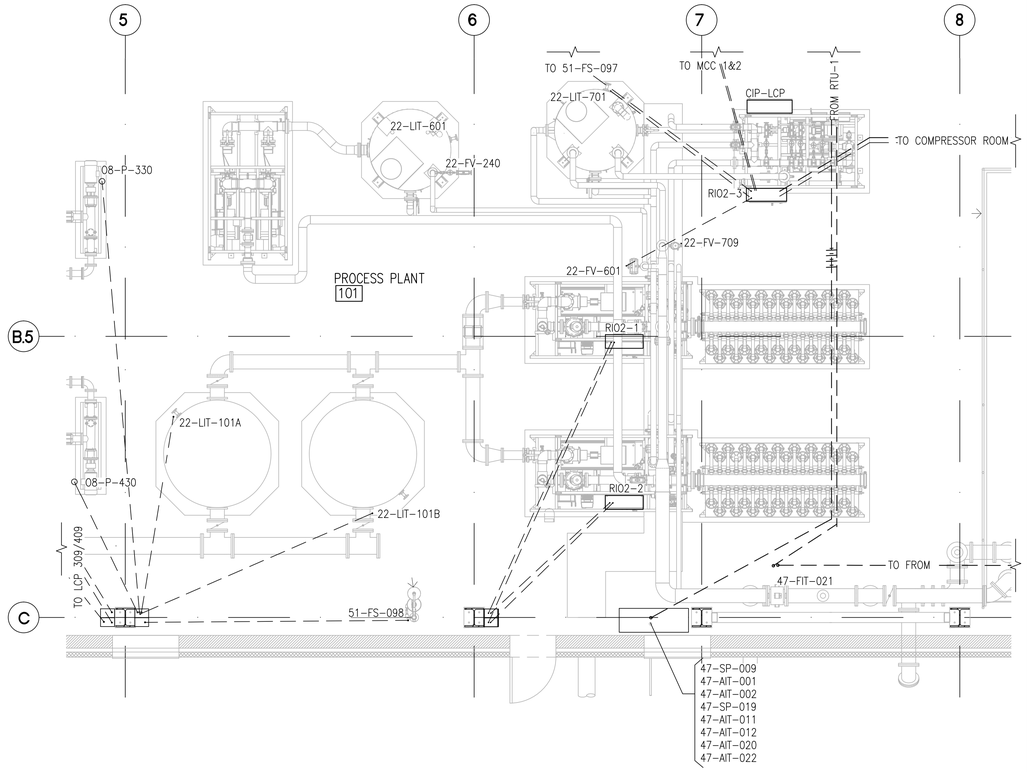

3 ES-009 ELECTRICAL PROCESS POWER PLAN ENLARGED AREAS

SCALE: 1/4" = 1'-0"

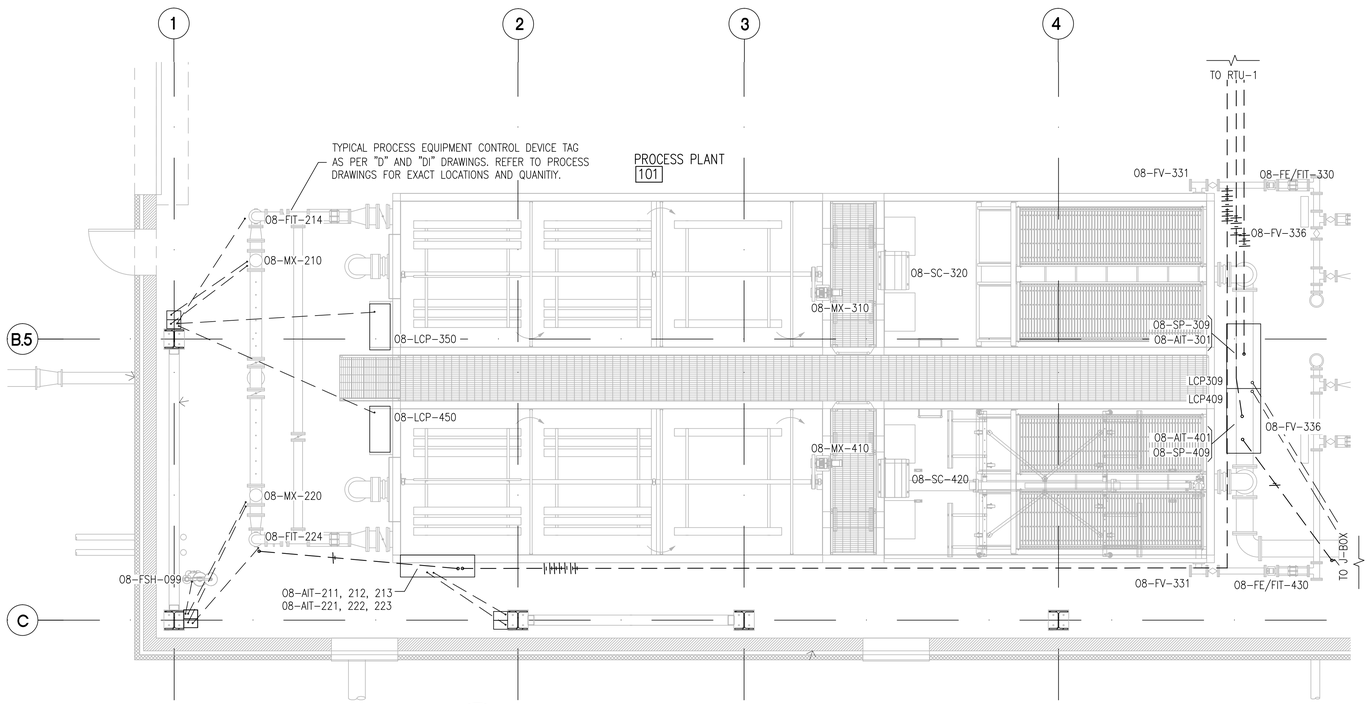

1 ES-009 ELECTRICAL PROCESS POWER PLAN ENLARGED AREAS

SCALE: 1/4" = 1'-0"

LEGEND

PROCESS 120V CONTROL SIGNAL IN SLAB	
PROCESS 120V CONTROL SIGNAL ABOVE SLAB	
PROCESS LV POWER IN SLAB	
PROCESS LV POWER ABOVE SLAB	
TWO CHANNEL CABLE TRAY	
TWO CHANNEL CABLE TRAY TRANSITION UP/DOWN	
TWO CHANNEL NON-METALIC SURFACE RACEWAY	
CONTROL DEVICE/SENSOR	

GENERAL NOTES

1. CONTROL CABLES, CABLE TRAY, CONDUIT AND TERMINATIONS ARE PART OF THE ELECTRICAL DIV 26 SCOPE OF WORK.
2. DEVICES, SENSORS, RTU, ETC ARE PROCESS VENDOR SCOPE OF WORK.
3. CONDUIT RUNS AS SHOWN ARE DIAGRAMMATIC.
4. CONTRACTOR CAN COMBINE WHILE MAINTAINING DI/DO, AI/AO, AND 120V SEPARATION.
5. COORDINATE EXACT LOCATION AND QUANTITY OF CONTROL CONDUIT IN FIELD.

PROJECT NORTH
TRUE NORTH

Fully Sprinklered

100% Bid Documents, September 1, 2015

Additions:	Date:
Revisions:	

DCS Infrastructure, LLC
3249 route 112, building 4 suite 1B
Medford, N.Y. 11763 631-320-1706

Hatch Mott MacDonald

PROFESSIONAL CERTIFICATION
I HEREBY CERTIFY THAT THESE DOCUMENTS WERE PREPARED OR APPROVED BY ME, AND THAT I AM A DULY LICENSED PROFESSIONAL ENGINEER UNDER THE LAWS OF THE STATE OF MARYLAND, LICENSE NO. 46926, EXPIRATION DATE: 06/11/17

STATE OF MARYLAND — MICHAEL JOSEPH SCHUTZ — No. 46926 — PROFESSIONAL ENGINEER

Approved:	Approved: Chief, Facilities and Engineering:
	Approved: Associate Chief for Maintenance And Operations, Perry Point:
	Approved: Engineering Projects Supervisor
	Approved: Infection Control Officer

Drawing Title: ELECTRICAL PROCESS CONTROL PLAN 2 OF 2	Project Title: POTABLE WATER SYSTEM IMPROVEMENTS - TIER 1 PERRY POINT MD VAMC			Date: 9/1/2015
Approved: Associate Director for Operations: VAPAHCS PLANNING AND ENGINEERING	Scale: VARIES	Building No: 103	Checked: MJS / Drawn: MJS	Project No: 512A5-13-329
Approved: Director, Medical Center:	Location: VAMC PERRY POINT, MD 21902			DRAWING NO: ES-009 70 OF 124

DEPARTMENT OF VETERANS AFFAIRS

GENERAL NOTES

1. ALL DEVICES SHALL BE COMPARABLE WITH VA WIDE SYSTEM SIG-COM.
2. REFER TO RISER DIAGRAMS ES-014.
3. SECURITY CONTROL CENTER (SCC) IS LOCATED IN BUILDING 102.

MISSION CRITICAL CONTROL LEVELS

1. FIRST POINT OF CONTROL – FENCING, GATE ACCESS
2. SECOND POINT OF CONTROL – BUILDING EXTERIOR DOORS
3. THIRD POINT OF CONTROL – PUBLIC ENTRANCE AND SCREENING
4. FOURTH POINT OF CONTROL – AUTHORIZED ACCESS
5. FIFTH POINT OF CONTROL – RESTRICTED ACCESS

MISSION CRITICAL ELECTRONIC SAFETY AND SECURITY SYSTEMS (ESS)

VASS – VIDEO ACCESSMENT AND SURVEILLANCE
DSS – DETECTION AND SCREENING
DSPI – DURESS SECURITY PHONE INTERCOM
PACS – PHYSICAL ACCESS CONTROL SYSTEM
IDS – INTRUSION DETECTION SYSTEM

KEYED NOTES

1. MULTIMODE FIBER TO NEAREST TELECOMMUNICATIONS MANHOLE. REFER TO ES-002 ELECTRICAL SITE PLAN.
2. TELEPHONE / DATA D'MARC BACKBOARD.
3. PACS CONTROLLER.
4. ANTENNA ON ROOF AIMED AT THE FIRE DEPARTMANT FACILITY WIDE ALARM SYSTEM FOR FIRE ALARM REPORTING SYSTEM.
5. DATA RACK.
6. VASS RECORDER.
7. UPS.
8. TV RECEPTACLE MOUNTED AT 84" AFF.
9. REMOTE GENERATOR ANNUNCIATION PANEL.
10. ALARM SENSORS AT FUEL TANK VAULT. SEE ES-002 SITE PLAN.
11. POWER MANAGER SYSTEMS CONTROLLER PARALLELING CONTROLS.
12. ATS ALARMS.
13. MTS ALARMS.
14. PORTABLE GENERATOR CONNECTION BOX
15. GENERATOR.

ESS + FIRE ALARM LEGEND

#	KEY NOTE
———	NEW ABOVE GRADE / SLAB CONDUIT
— — —	NEW UNDERGROUND / BELOW SLAB CONDUIT
FACP	FIRE ALARM CONTROL PANEL
	FIRE ALARM SPEAKER / STROBE ONE ASSEMBLY
F	FIRE ALARM PULL STATION
	FIRE ALARM STROBE ONLY
S	SMOKE DETECTOR
H	HEAT DETECTOR
T	TAMPER SWITCH
FS	FLOW SWITCH
F	FIRE ALARM BELL
DACT	DIGITAL ALARM COMMUNICATION TRANSMITTER
SEC	SECURITY PANEL
PACS	PHYSICAL ACCESS CONTROL SYSTEM CONTROLLER
UPS	UNINTERRUPTIBLE POWER SUPPLY
	INTERCOM MICROPHONE
IC	INTERCOM SPEAKER
360	360 DEGREE CCTV CAMERA WITH ZOOM
	180 DEGREE CCTV CAMERA WITH ZOOM
WI	WIRELESSES CONNECTION
	CELLULAR ANTENNAE FOR FIRE ALARM
CR	CARD READER
ES	ELECTRIC STRIKE
MAGLOCK	MAGNETIC LOCK
PIR RTE	PROXIMITY INFRARED REQUEST TO EXIT
DC	DOOR CONTACT ALARM
BELL	BELL
PIR	INFRARED MOTION SENSOR
B	WINDOW GLASS BREAK SENSOR

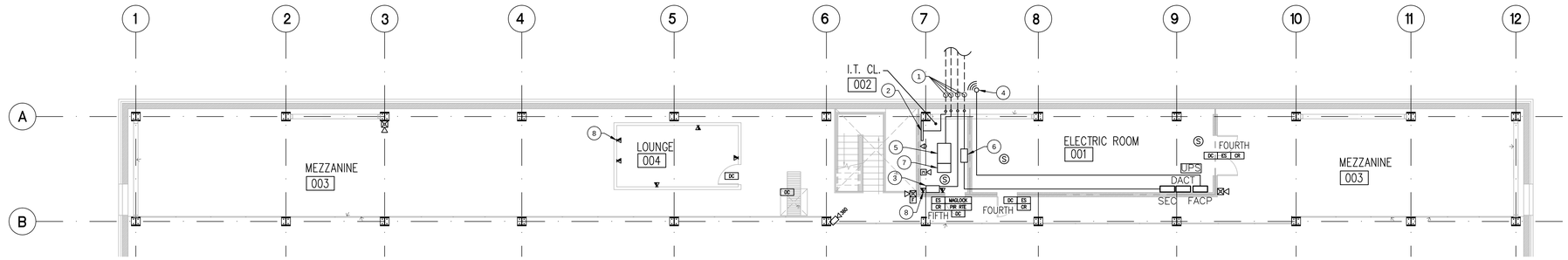

2 ES-010 COMMUNICATION AND FIRE ALARM PLAN MEZZANINE LEVEL
SCALE: 1/8" = 1'-0"

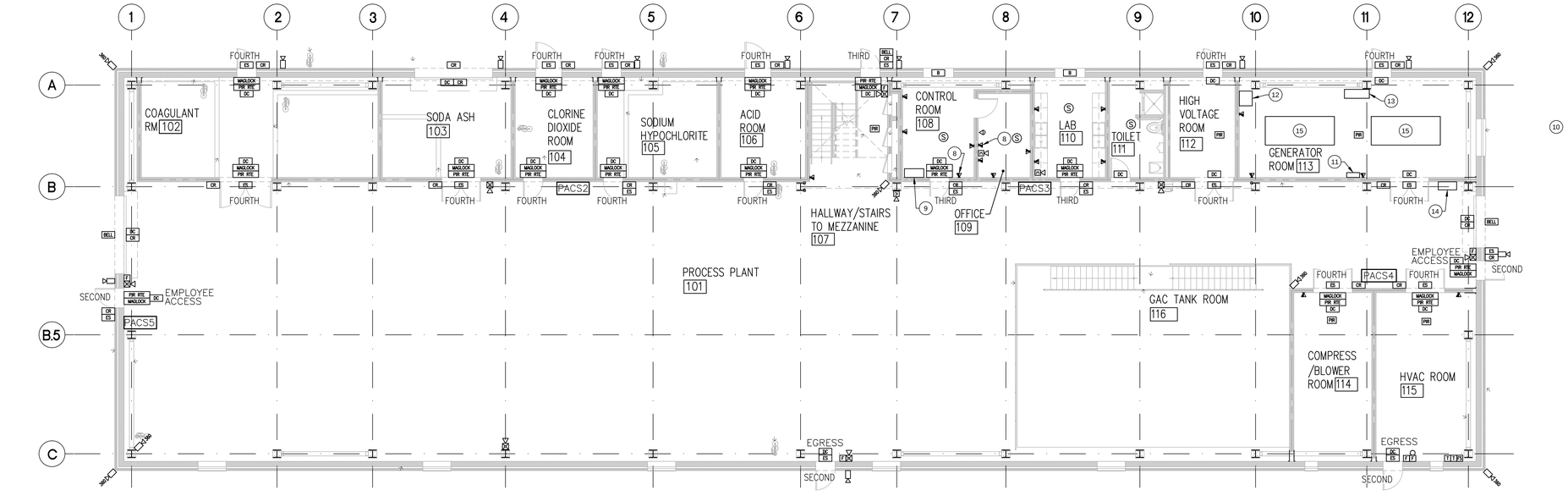

1 ES-010 COMMUNICATION AND FIRE ALARM PLAN
SCALE: 1/8" = 1'-0"

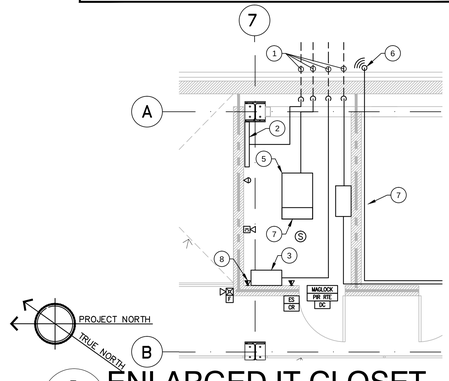

3 ES-010 ENLARGED IT CLOSET
SCALE: 1/4" = 1'-0"

Fully Sprinklered

100% Bid Documents, September 1, 2015

PROFESSIONAL CERTIFICATION
I HEREBY CERTIFY THAT THESE DOCUMENTS WERE PREPARED OR APPROVED BY ME, AND THAT I AM A DULY LICENSED PROFESSIONAL ENGINEER UNDER THE LAWS OF THE STATE OF MARYLAND, LICENSE NO. 46926, EXPIRATION DATE: 06/11/17

Additions:	Date:
Revisions:	

DCS Infrastructure, LLC
3249 route 112, building 4 suite 1B
Medford, N.Y. 11763 631-320-1706
Hatch Mott MacDonald

Approved:
Approved: Chief, Facilities and Engineering:
Approved: Associate Chief for Maintenance And Operations, Perry Point:
Approved: Engineering Projects Supervisor
Approved: Infection Control Officer

Drawing Title: COMMUNICATION AND FIRE ALARM PLANS

Approved: Associate Director for Operations: VAPAHCS PLANNING AND ENGINEERING
Approved: Director, Medical Center:

Project Title: POTABLE WATER SYSTEM IMPROVEMENTS - TIER 1
PERRY POINT MD
VAMC

Location: VAMC PERRY POINT, MD 21902

Scale:	Building No:	Checked:	Drawn:
1/8" = 1'-0"	103	MJS	MFM

Date: 9/1/2015
Project No: 512A5-13-329
DRAWING NO: ES-010
71 OF 124

DEPARTMENT OF VETERANS AFFAIRS

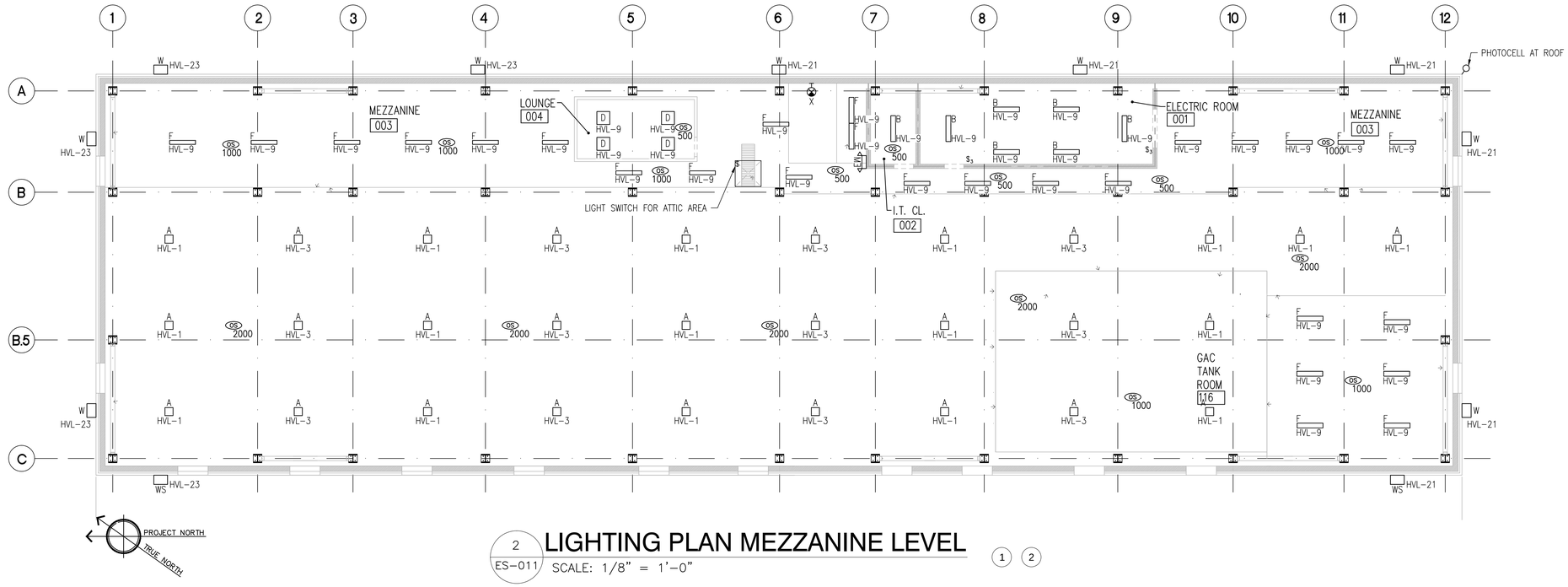

2 ES-011 LIGHTING PLAN MEZZANINE LEVEL

SCALE: 1/8" = 1'-0"

KEYED NOTES

1. COORDINATE EXACT LOCATION OF LIGHT FIXTURE WITH STRUCTURAL COLUMNS, HVAC, AND WATER TREATMENT EQUIPMENT, TO GIVE BEST ILLUMINATION.
2. ALL LIGHTING FIXTURE CONTROLLED BY OCCUPANCY SENSOR SHALL BE SUPPLIED COMPATIBLE WITH SENSOR TECHNOLOGY REQUIREMENTS

GENERAL NOTES

1. ALL LIGHTING CIRCUITS SHALL BE #10AWG+#10GND.
2. ALL X AND EM FIXTURES WIRED TO CIRCUIT HVL-17.
3. BUILDING IS FED FROM EMERGENCY GENERATOR SO ALL LIGHTING HAS EMERGENCY BACKUP. BATTERY PACKS ARE PLACED AT EGRESS LOCATION IN THE ADVENT OF GENERATOR FAILURE.
4. LIGHTING FIXTURE A MOUNTED AT 24' AFF.
5. LIGHTING FIXTURE "W" MOUNTED AT 14' AFF.
6. ALL LIGHTING SHALL BE PROFESSIONALLY DONE AND SHALL BE SQUARE AND PLUMB.

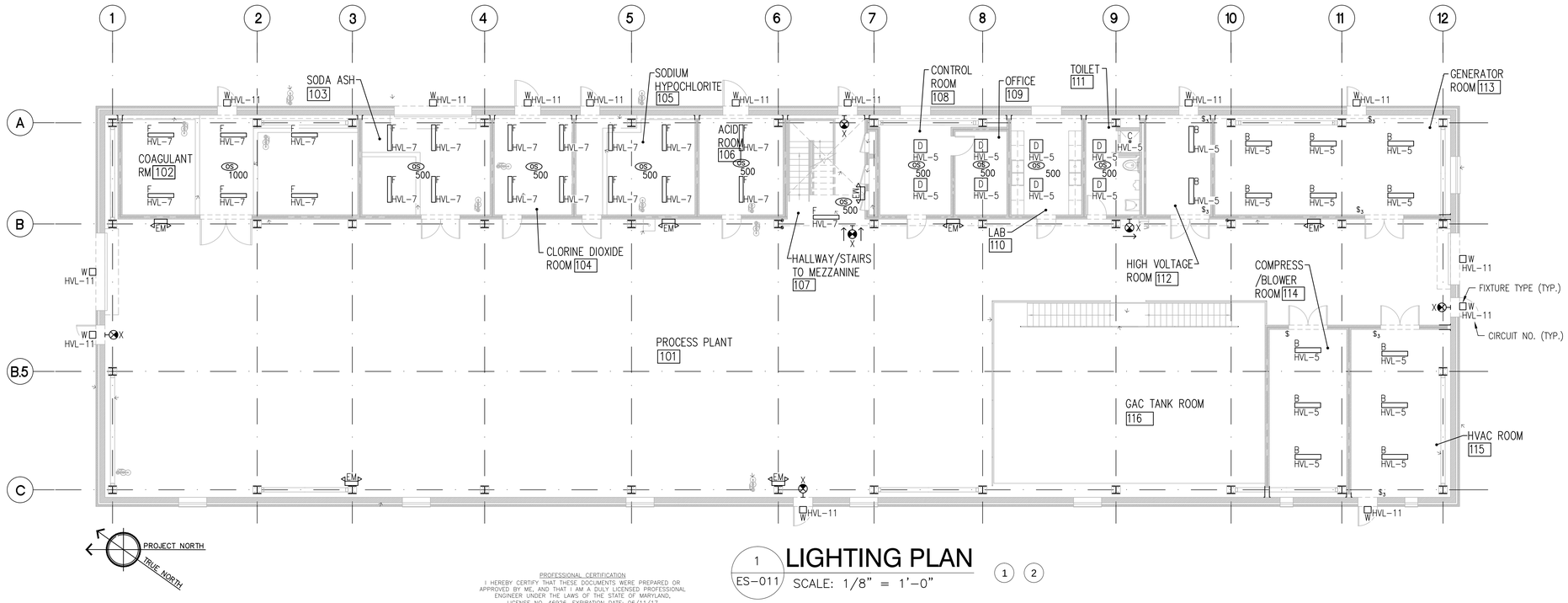

1 ES-011 LIGHTING PLAN

SCALE: 1/8" = 1'-0"

Fully Sprinklered

100% Bid Documents, September 1, 2015

Additions:	Date:
Revisions:	

DCS Infrastructure, LLC
3249 route 112, building 4 suite 1B
Medford, N.Y. 11763 631-320-1706

Hatch Mott MacDonald

PROFESSIONAL CERTIFICATION
I HEREBY CERTIFY THAT THESE DOCUMENTS WERE PREPARED OR APPROVED BY ME, AND THAT I AM A DULY LICENSED PROFESSIONAL ENGINEER UNDER THE LAWS OF THE STATE OF MARYLAND, LICENSE NO. 46926, EXPIRATION DATE: 06/11/17

Approved:

Approved: Chief, Facilities and Engineering:

Approved: Associate Chief for Maintenance And Operations, Perry Point:

Approved: Engineering Projects Supervisor

Approved: Infection Control Officer

Drawing Title: LIGHTING PLAN

Approved: Associate Director for Operations: VAPAHCS PLANNING AND ENGINEERING

Approved: Director, Medical Center:

Project Title: POTABLE WATER SYSTEM IMPROVEMENTS - TIER 1
PERRY POINT MD
VAMC

Scale: 1/8" = 1'-0" | Building No: 103 | Checked: MJS | Drawn: MFM

Location: VAMC PERRY POINT, MD 21902

Date: 9/1/2015

Project No: 512A5-13-329

DRAWING NO: ES-011

72 OF 124

DEPARTMENT OF VETERANS AFFAIRS

LIGHTNING PROTECTION LEGEND

— LPS —	CLASS I COPPER LIGHTNING PROTECTION CONDUCTOR
— G —	CLASS I COPPER GROUNDING CONDUCTOR
	3/4"X10' COPPER GROUND ROD
	COPPER AIR TERMINAL
BM	BI–METAL (ALUMINUM TO COPPER) CONNECTION
	EXOTHERMIC BOND
	DOWN CONNECTION

PROTECTION GENERAL NOTES

1. GROUNDING SHALL BE IN ACCORDANCE WITH NATIONAL ELECTRIC CODE 250.
2. LIGHTNING PROTECTION SHALL BE IN ACCORDANCE WITH NFPA 780.
3. GROUNDING TEST SHALL BE LESS THAN 25 OHMS. ADD ADDITIONAL GROUND RODS AS REQUIRED.
4. OBTAIN AND INSTALL A UL NUMBERED MASTER LABEL FOR THE NEW LIGHTENING PROTECTION SYSTEM.

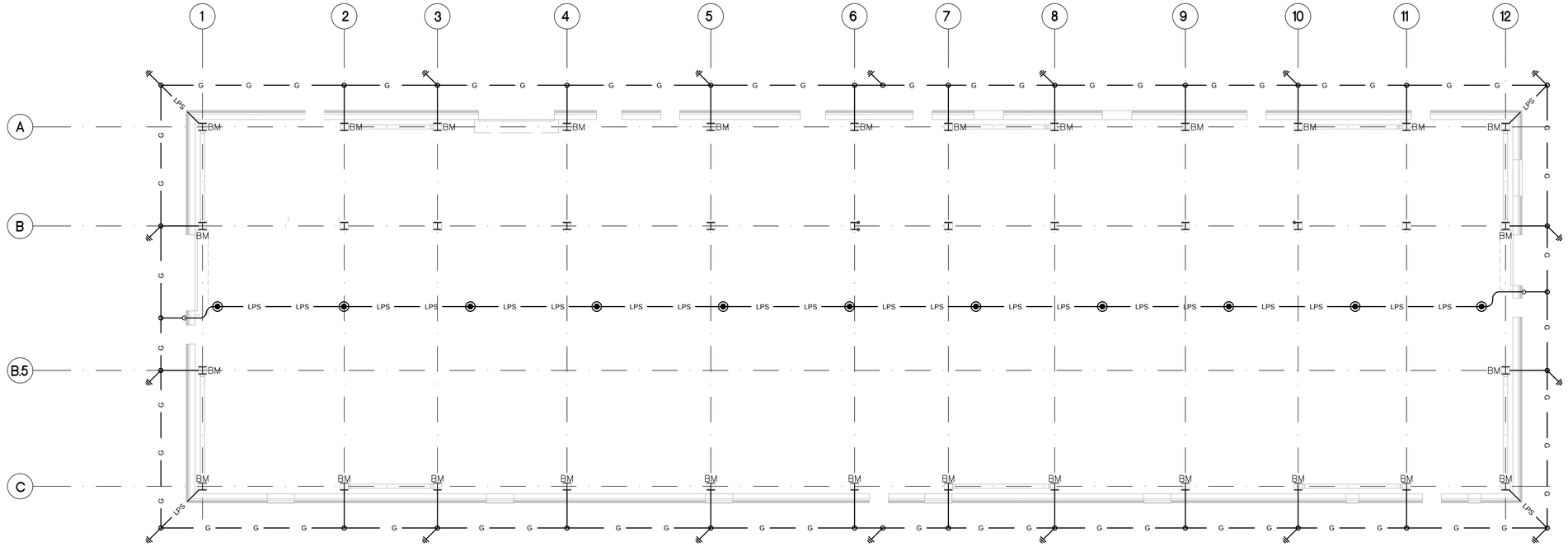

PROJECT NORTH
TRUE NORTH

1 ES–012 **LIGHTNING PROTECTION**
SCALE: 1/8" = 1'–0"

LIGHTING KEYED NOTES

1. COORDINATE EXACT LOCATION OF LIGHT FIXTURE WITH STRUCTURAL COLUMNS, HVAC, AND WATER TREATMENT EQUIPMENT, TO GIVE BEST ILLUMINATION.
2. ALL LIGHTING FIXTURE CONTROLLED BY OCCUPANCY SENSOR SHALL BE SUPPLIED COMPATIBLE WITH SENSOR TECHNOLOGY REQUIREMENTS

LIGHTING GENERAL NOTES

1. ALL LIGHTING CIRCUITS SHALL BE #10AWG+#10GND.
2. BUILDING IS FED FROM EMERGENCY GENERATOR SO ALL LIGHTING HAS EMERGENCY BACKUP. BATTERY PACKS ARE PLACED AT EGRESS LOCATION IN THE ADVENT OF GENERATOR FAILURE.

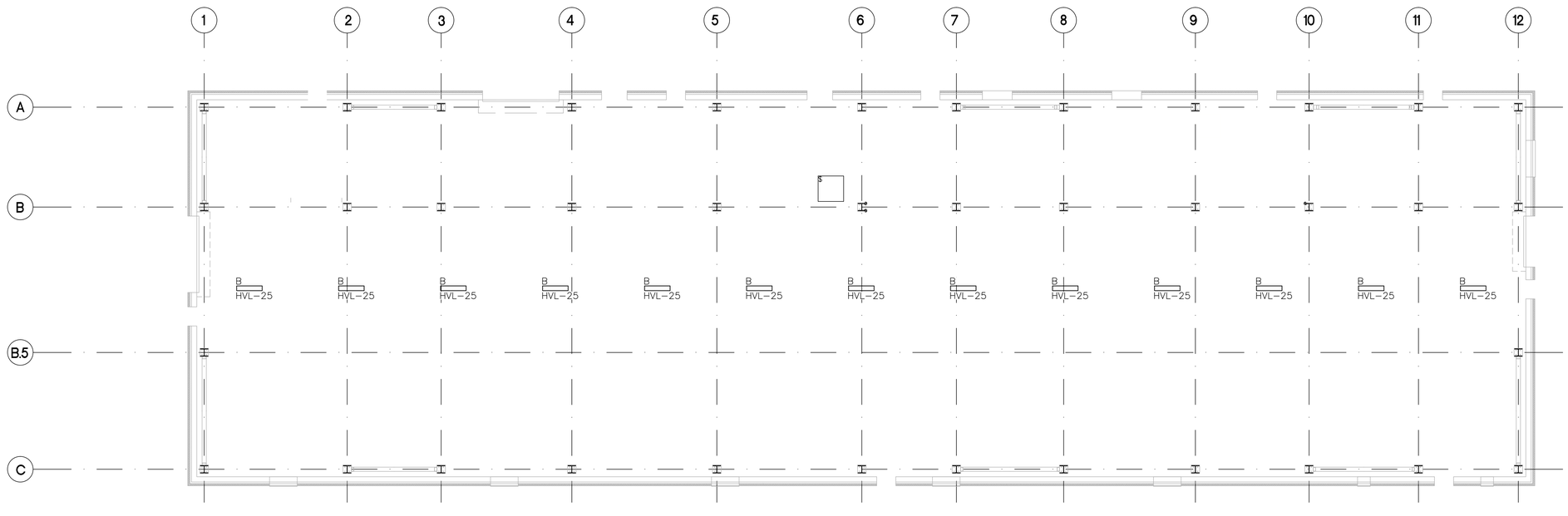

PROJECT NORTH
TRUE NORTH

2 ES–012 **ATTIC LIGHTING PLAN**
SCALE: 1/8" = 1'–0"

1 2

PROFESSIONAL CERTIFICATION
I HEREBY CERTIFY THAT THESE DOCUMENTS WERE PREPARED OR APPROVED BY ME, AND THAT I AM A DULY LICENSED PROFESSIONAL ENGINEER UNDER THE LAWS OF THE STATE OF MARYLAND, LICENSE NO. 46926, EXPIRATION DATE: 06/11/17

Fully Sprinklered

100% Bid Documents, September 1, 2015

Additions:	Date:
Revisions:	

DCS Infrastructure, LLC
3249 route 112, building 4 suite 1B
Medford, N.Y. 11763 631-320-1706

Hatch Mott MacDonald

STATE OF MARYLAND — MICHAEL JOHN SCHUTTA — 46926 — PROFESSIONAL ENGINEER

Approved:

Approved: Chief, Facilities and Engineering:

Approved: Associate Chief for Maintenance And Operations, Perry Point:

Approved: Engineering Projects Supervisor

Approved: Infection Control Officer

Drawing Title: LIGHTNING PROTECTION AND ATTIC LIGHTING PLANS

Approved: Associate Director for Operations: VAPAHCS PLANNING AND ENGINEERING

Approved: Director, Medical Center:

Project Title: POTABLE WATER SYSTEM IMPROVEMENTS - TIER 1
PERRY POINT MD
VAMC

Scale:	Building No:	Checked:	Drawn:
1/8" = 1'-0"	103	MJS	MFM

Location: VAMC PERRY POINT, MD 21902

Date: 9/1/2015

Project No: 512A5-13-329

DRAWING NO: ES-012

73 OF 124

DEPARTMENT OF VETERANS AFFAIRS

FEEDER SCHEDULE

	FEEDER #	OC AMPS	# SETS	# CABLES	CABLE SIZE	GROUND SIZE	SIZE CONDUIT	COMMENTS
	HVF-1		1	3	2/0	–	EPR	EXISTING 15KV
	HVF-2		1	3	2/0	–	EPR	NEW 15KV
*	F-1	600A	2	4	500	1	3-1/2"	GALV. RIGID STL.
*	F-2	600A	2	4	500	1	3-1/2"	GALV. RIGID STL.
*	F-3	600A	2	4	500	1	3-1/2"	GALV. RIGID STL.
*	F-4	300A	1	4	500	4	3-1/2"	GALV. RIGID STL.
*	F-5	150A	1	4	3/0	6	2"	GALV. RIGID STL.
+	F-6	300A	1	3	400	4	3"	GALV. RIGID STL.
+	F-7	40A	1	3	8	10	1"	GALV. RIGID STL.
+	F-8	20A	1	3	12	12	3/4"	GALV. RIGID STL.
+	F-9	300A	1	3	400	4	3"	GALV. RIGID STL.
+	F-10	60A	1	3	6	10	1"	GALV. RIGID STL.
+	F-11	80A	1	3	4	8	1-1/4"	GALV. RIGID STL.
+	F-12	70A	1	3	4	8	1-1/4"	GALV. RIGID STL.
*	F-13	150A	1	4	3/0	6	2"	GALV. RIGID STL.
+	F-14	15A	1	3	12	12	3/4"	GALV. RIGID STL.
+	F-15	15A	1	3	12	12	3/4"	GALV. RIGID STL.
*	F-16	100A	1	4	1	8	1-1/2"	GALV. RIGID STL.
+	F-17	125A	1	3	1/0	12	1-1/2"	GALV. RIGID STL. SCHEDULE 80 PVC
+	F-18	15A	1	3	12	12	3/4"	GALV. RIGID STL.
+	F-19	15A	1	3	12	12	3/4"	GALV. RIGID STL.
+	F-20	15A	1	3	12	12	3/4"	GALV. RIGID STL.
+	F-21	15A	1	3	12	12	3/4"	GALV. RIGID STL.
+	F-22	90A	1	3	3	8	1"	GALV. RIGID STL.
+	F-23	60A	1	3	4	10	1"	GALV. RIGID STL.
+	F-24	30A	1	3	10	10	3/4"	GALV. RIGID STL.
+	F-25	40A	1	3	8	10	1"	GALV. RIGID STL.
+	F-26	15A	1	3	12	12	3/4"	GALV. RIGID STL.
+	F-27	15A	1	3	12	12	3/4"	GALV. RIGID STL.
+	F-28	100A	1	3	1	8	1"	GALV. RIGID STL.
+	F-29	125A	1	3	1/0	6	2"	GALV. RIGID STL. SCHEDULE 80 PVC
*	F-30	100A	1	4	1	8	1-1/2"	GALV. RIGID STL.

* FEEDER SIZING BASED UPON .8 DERATE FOR MORE THAN 3 CONDUCTORS IN CONDUIT – CABLE THWN-THHN (#1 AND SMALLER BASED UPON 60DEGREE)
+ FEEDER SIZING BASED UPON .82 DERATE FOR THWN-THHN @ 110 DEGREE F.
FEEDERS IN CHEMICAL STORAGE ROOMS SHALL BE ROB-ROY GALV. — ALT-DEDUCT

	MOTOR DESCRIPTION	PROCESS TAG
1A	FLOC DRIVER 1	08-MX-310
2A	SLUDGE COLLECTOR 1	08-SC-320
3A	SOLIDS SUBMERSIBLE PUMP 1	09-P-110A
4A	FINISH WATER PUMP 1	48-P-110
5A	CIP PUMP 1	22-P-710
6A	IN LINE MIXER 1	08-MX-210
7	POLY-ALUMINUM CHLORIDE RECIR/TRANS PUMP	51-TP-350
8	ALUMINUM SULFATE RECIR/TRANS PUMP	51-TP-450
9A	PROCESS PUMP 1	22-P-101-1
10A	AIR BLOWER 1	90-B-201A
11	DUPLEX AIR COMPRESSOR	90-AC-001A/B
12A	BACKWASH PUMP 1	22-P-610A
13A	SODIUM HYPOCHLORITE RECIR/TRANS PUMP	51-TP-250A
14A	SLUDGE PUMP 1	08-P-330

1B	FLOC DRIVER 2	08-MX-310
2B	SLUDGE COLLECTOR 2	08-SC-320
3B	SOLIDS SUBMERSIBLE PUMP 2	09-P-110B
4B	FINISH WATER PUMP 2	48-P-110B
5B	CIP PUMP 2	22-P-710
6B	IN LINE MIXER 2	08-MX-210
9B	PROCESS PUMP 2	22-P-101-2
10B	AIR BLOWER 2	90-B-201B
12B	BACKWASH PUMP 2	22-P-610B
13B	SODIUM HYPOCHLORITE RECIR/TRANS PUMP	51-TP-250B
14B	SLUDGE PUMP 1	08-P-430

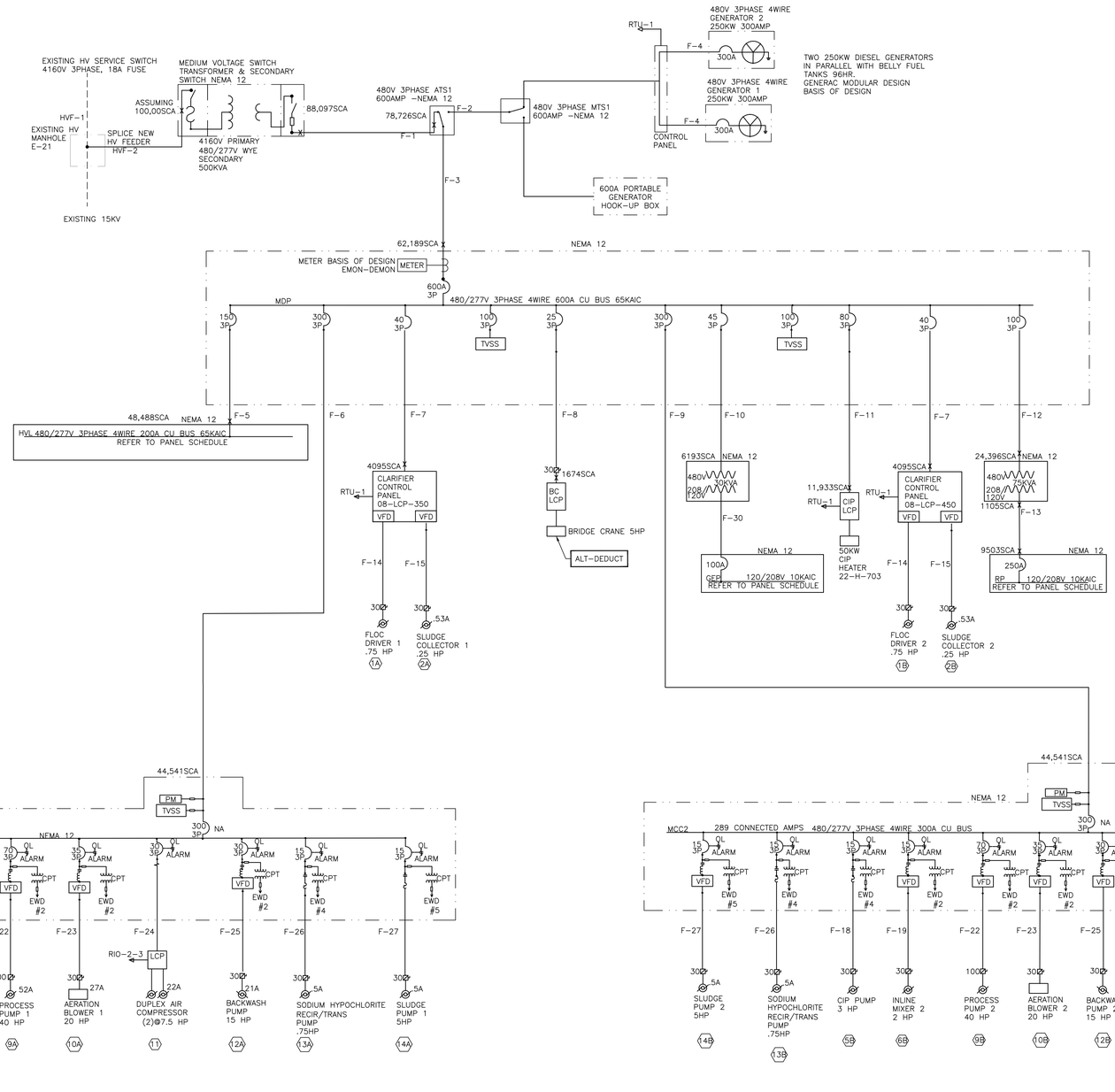

PROFESSIONAL CERTIFICATION
I HEREBY CERTIFY THAT THESE DOCUMENTS WERE PREPARED OR APPROVED BY ME, AND THAT I AM A DULY LICENSED PROFESSIONAL ENGINEER UNDER THE LAWS OF THE STATE OF MARYLAND, LICENSE NO. 46926, EXPIRATION DATE: 06/11/17

Fully Sprinklered

100% Bid Documents, September 1, 2015

Additions: | Date:

Revisions:

DCS Infrastructure, LLC
3249 route 112, building 4 suite 1B
Medford, N.Y. 11763 631-320-1706
Hatch Mott MacDonald

STATE OF MARYLAND MICHAEL JOSEPH SULLIVAN 46926 PROFESSIONAL ENGINEER

Approved:

Approved: Chief, Facilities and Engineering:

Approved: Associate Chief for Maintenance And Operations, Perry Point:

Approved: Engineering Projects Supervisor

Approved: Infection Control Officer

Approved: Director, Medical Center:

Drawing Title: ONE LINE DIAGRAM AND FEEDER SCHEDULE

Approved: Associate Director for Operations: VAPAHCS PLANNING AND ENGINEERING

Project Title: POTABLE WATER SYSTEM IMPROVEMENTS - TIER 1
PERRY POINT MD
VAMC

Scale: NONE | Building No: 103 | Checked: MJS | Drawn: MJS

Location: VAMC PERRY POINT, MD 21902

Date: 9/1/2015

Project No: 512A5-13-329

DRAWING NO: ES-013

74 OF 124

DEPARTMENT OF VETERANS AFFAIRS

MCC1

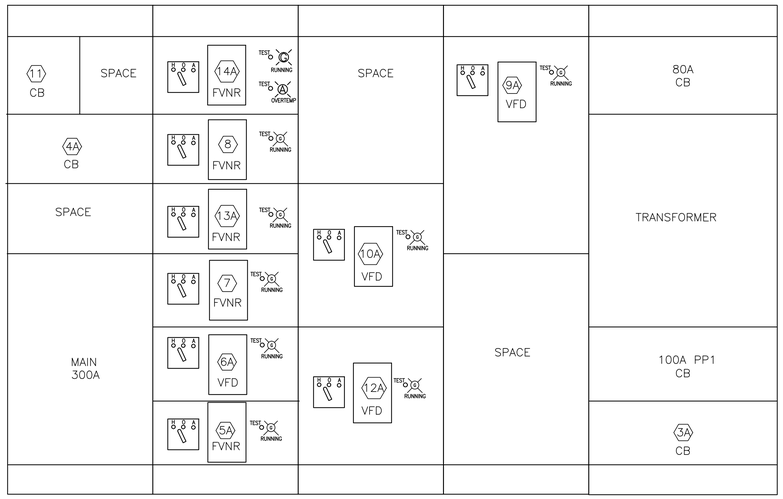

MOTOR CONTROL CENTER 1 DETAIL

3 / ES-014

SCALE: N.T.S.

MCC2

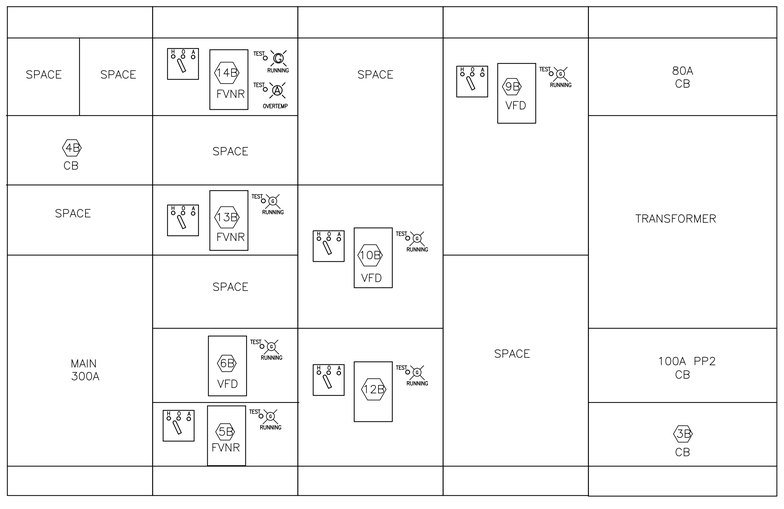

MOTOR CONTROL CENTER 1 DETAIL

4 / ES-014

SCALE: N.T.S.

VFD IN MCC

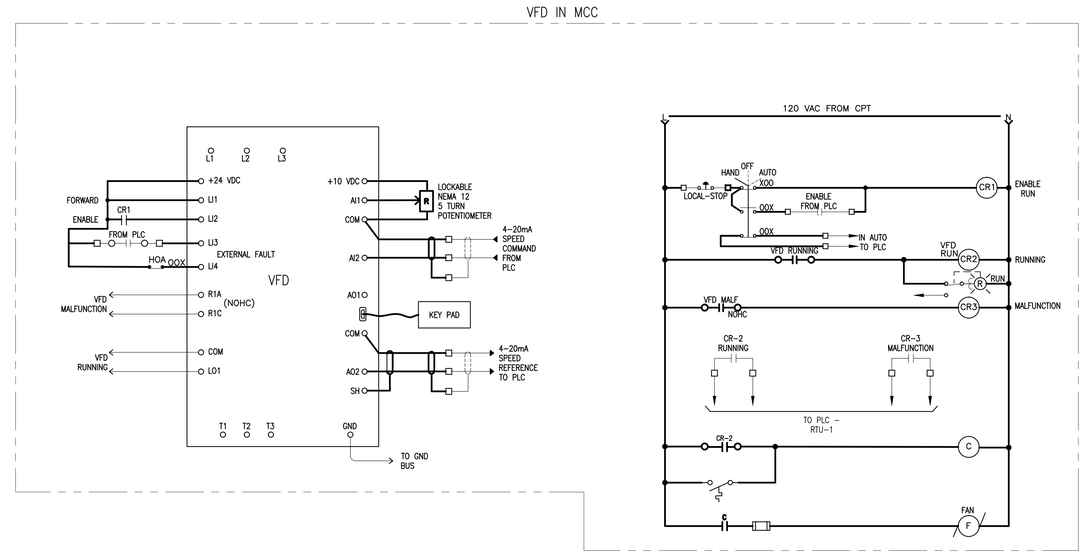

WATER TREATMENT PLANT PROCESS EQUIPMENT - TIER 1

VFD TYPICAL ELEMENTARY WIRING DIAGRAM #2

2 / ES-014

SCALE: N.T.S.

TYPICAL FOR:
IN-LINE MIXERS
PROCESS PUMPS
BACKPULSE PUMPS
AERATION BLOWERS

Fully Sprinklered

100% Bid Documents, September 1, 2015

Additions:	Date:
Revisions:	

DCS Infrastructure, LLC
3249 route 112, building 4 suite 1B
Medford, N.Y. 11763
631-320-1706

Hatch Mott MacDonald

PROFESSIONAL CERTIFICATION
I HEREBY CERTIFY THAT THESE DOCUMENTS WERE PREPARED OR APPROVED BY ME, AND THAT I AM A DULY LICENSED PROFESSIONAL ENGINEER UNDER THE LAWS OF THE STATE OF MARYLAND, LICENSE NO. 46926, EXPIRATION DATE: 06/11/17

STATE OF MARYLAND — MICHAEL BRIAN TYLER — 46926 — PROFESSIONAL ENGINEER

Approved:

Approved: Chief, Facilities and Engineering:

Approved: Associate Chief for Maintenance And Operations, Perry Point:

Approved: Engineering Projects Supervisor

Approved: Infection Control Officer

Approved: Director, Medical Center:

Drawing Title: ELEMENTARY WIRING DIAGRAMS 1 OF 2

Approved: Associate Director for Operations: VAPAHCS PLANNING AND ENGINEERING

Project Title: POTABLE WATER SYSTEM IMPROVEMENTS - TIER 1
PERRY POINT MD
VAMC

Scale:	Building No:	Checked:	Drawn:
NONE	103	MJS	MJS

Location: VAMC PERRY POINT, MD 21902

Date: 9/1/2015

Project No: 512A5-13-329

DRAWING NO: ES-014

75 OF 124

DEPARTMENT OF VETERANS AFFAIRS

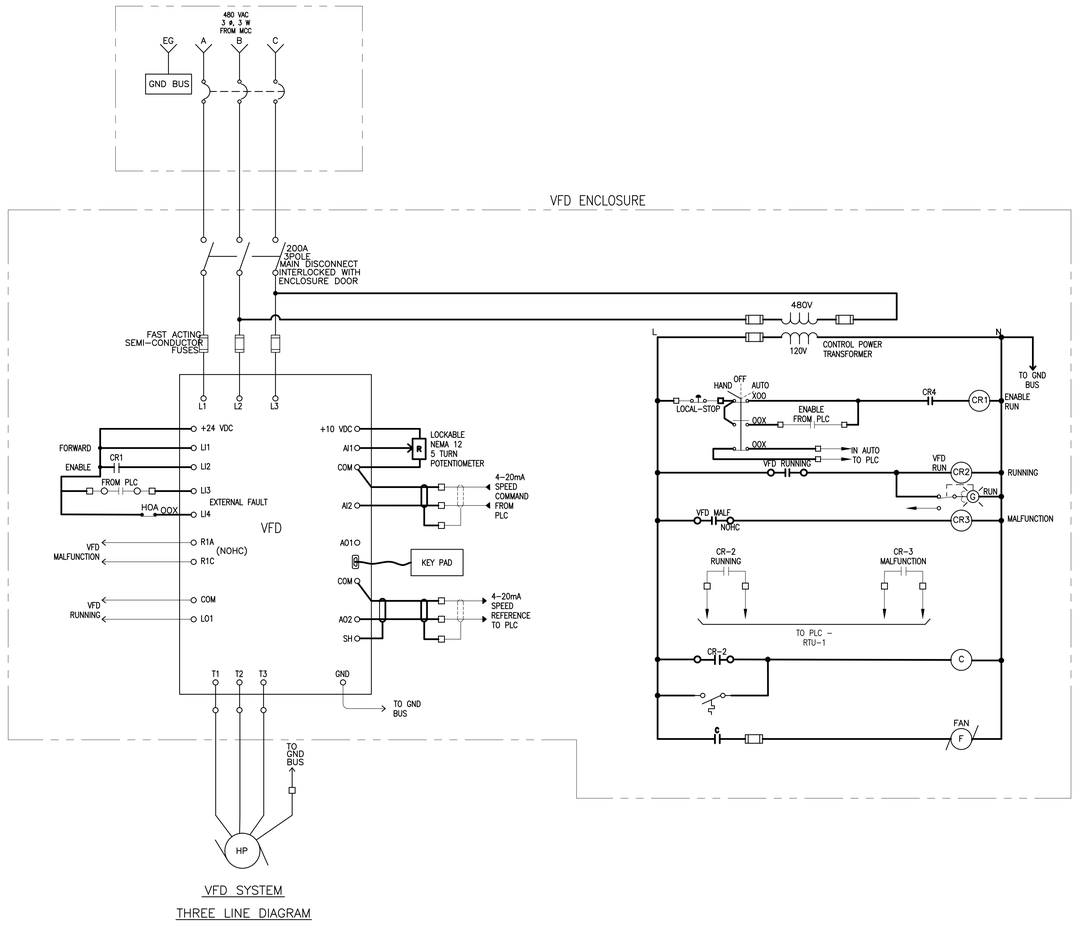

FINISH WATER PUMPS - TIER 1
VFD TYPICAL ELEMENTARY WIRING DIAGRAM #3

1 ES-014 SCALE: N.T.S.

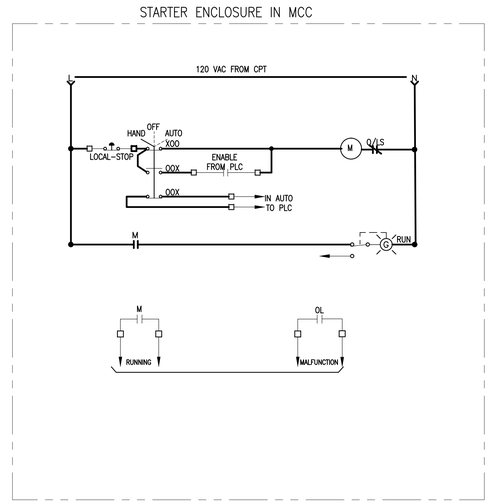

TYPICAL FOR:
SODIUM HYPOCHLORITE RECYCLE PUMPS
ALUMINUM SULFATE RECYCLE PUMPS
PHLYALUMINUM CHLORIDE RECYCLE PUMPS
CIP PUMPS

WATER TREATMENT PLANT PROCESS EQUIPMENT - TIER 1
STARTER TYPICAL ELEMENTARY WIRING DIAGRAM #4

2 ES-014 SCALE: N.T.S.

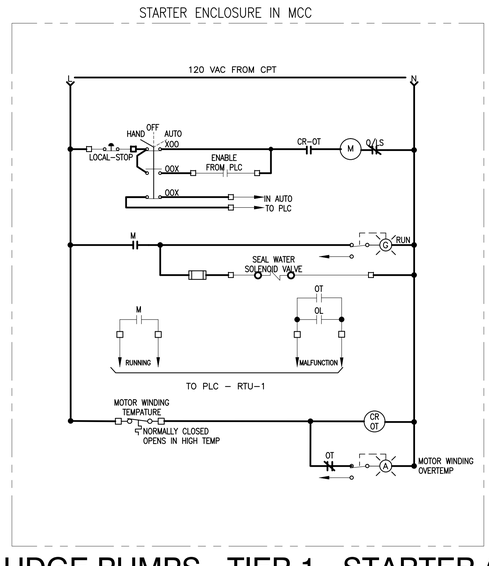

SLUDGE PUMPS - TIER 1 - STARTER (TYP)
ELEMENTARY WIRING DIAGRAM #5

2 ES-014 SCALE: N.T.S.

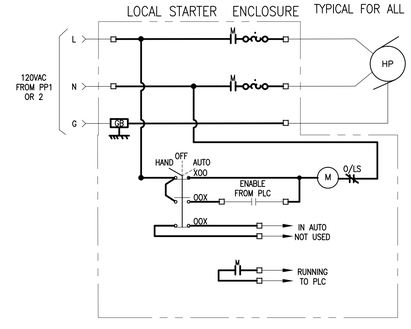

SINGLE PHASE MOTOR STARTER - TIER 1
ELEMENTARY WIRING DIAGRAM #6

2 ES-014 SCALE: N.T.S.

Fully Sprinklered

100% Bid Documents, September 1, 2015

PROFESSIONAL CERTIFICATION
I HEREBY CERTIFY THAT THESE DOCUMENTS WERE PREPARED OR APPROVED BY ME, AND THAT I AM A DULY LICENSED PROFESSIONAL ENGINEER UNDER THE LAWS OF THE STATE OF MARYLAND, LICENSE NO. 46926, EXPIRATION DATE: 06/11/17

Additions:	Date:
Revisions:	

DCS Infrastructure, LLC
3249 route 112, building 4 suite 1B
Medford, N.Y. 11763 631-320-1706
Hatch Mott MacDonald

STATE OF MARYLAND MICHAEL JOHN SCHUTZ 46926 PROFESSIONAL ENGINEER

Approved:
Approved: Chief, Facilities and Engineering:
Approved: Associate Chief for Maintenance And Operations, Perry Point:
Approved: Engineering Projects Supervisor
Approved: Infection Control Officer

Drawing Title: ELEMENTRY WIRING DIAGRAMS 2 OF 2

Project Title: POTABLE WATER SYSTEM IMPROVEMENTS - TIER 1
PERRY POINT MD
VAMC

Date: 9/1/2015

Project No: 512A5-13-329

Approved: Associate Director for Operations: VAPAHCS PLANNING AND ENGINEERING

Approved: Director, Medical Center:

Scale:	Building No:	Checked:	Drawn:
NONE	103	MJS	MJS

Location: VAMC PERRY POINT, MD 21902

DRAWING NO: ES-015

76 OF 124

DEPARTMENT OF VETERANS AFFAIRS

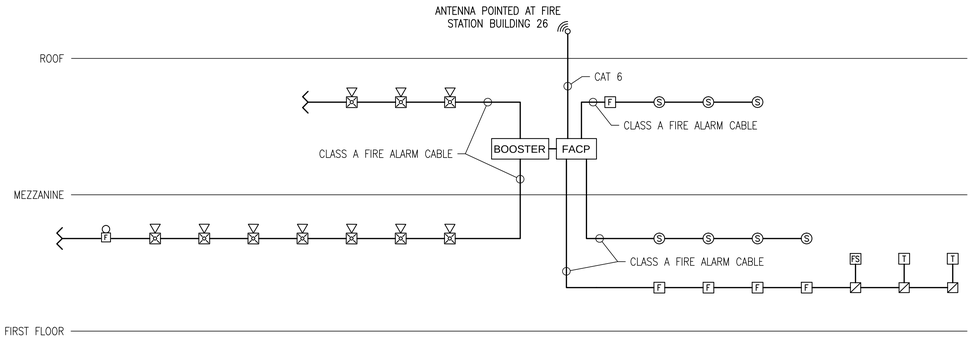

FIRE ALARM RISER NOTES:

1. THIS SCHEMATIC IS FOR REQUIRED SYSTEM COMPONENTS ILLUSTRATIONS ONLY. REFER TO FLOOR PLANS FOR ALL ADDRESSABLE DEVICE QUANTITY.
2. PROVIDE ALL WIRING TYPES, SIZES AND INTERCONNECTIONS RECOMMENDED BY THE MANUFACTURER.
3. NOT ALL ADDRESSABLE INPUTS AND OUTPUT DEVICES ARE SHOWN ON THE DRAWINGS. THE CONTRACTOR SHALL PROVIDE THESE DEVICES AS REQUIRED FOR PROPER SYSTEM OPERATION.
4. FIRE ALARM SYSTEM SHALL BE COMPATIBLE WITH SIG COM.

1 / ES-016 **FIRE ALARM RISER**
SCALE: N.T.S.

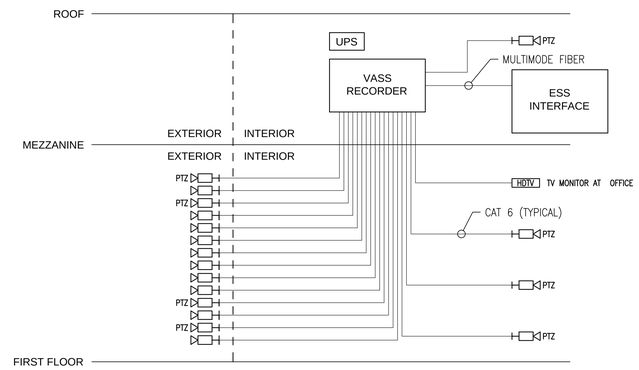

1 / ES-016 **VIDEO ASSESSMENT AND SURVEILLANCE SYSTEM RISER**
SCALE: N.T.S.

RISER DIAGRAM GENERAL NOTES:

1) RISERS SHOWN ARE FOR SCHEMATIC ILLUSTRATION PURPOSES ONLY.
2) CONTRACTOR SHALL SHALL PROVIDE ALL DEVICES, WIRING TYPES, SIZES AND INTERCONNECTIONS RECOMMENDED BY AN APPROVED MANUFACTURER THAT IS COMPATIBLE WITH THE FACILITY CAMPUS SYSTEMS.
3) NOT ALL INPUT AND OUTPUT DEVICES ARE SHOWN ON THE DRAWINGS. THE CONTRACTOR SHALL PROVIDE THESE DEVICES AS REQUIRED FOR PROPER SYSTEM OPERATIONS.
4) CONTRACTOR SHALL SUPPLY SHOP DRAWINGS OF SYSTEM WITH WIRING DIAGRAMS FOR APPROVAL PRIOR TO ORDERING.

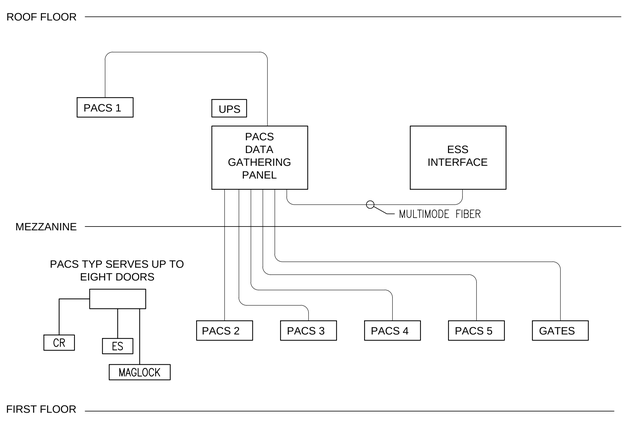

1 / ES-016 **PHYSICAL ACCESS CONTROL SYSTEM RISER**
SCALE: N.T.S.

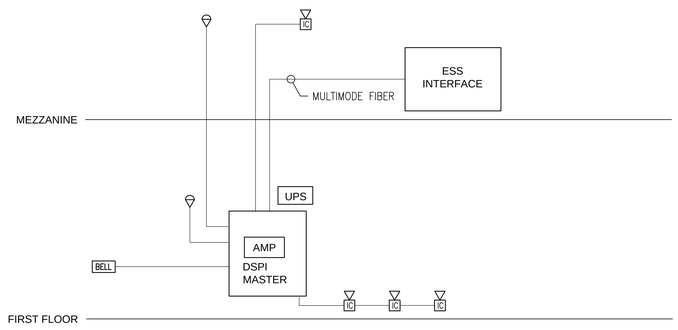

1 / ES-016 **INTERCOM (DSPI) RISER**
SCALE: N.T.S.

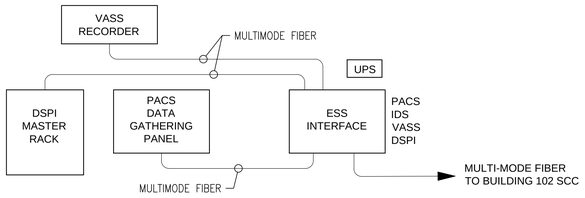

1 / ES-016 **ELECTRONIC SECURITY SYSTEM RISER**
SCALE: N.T.S.

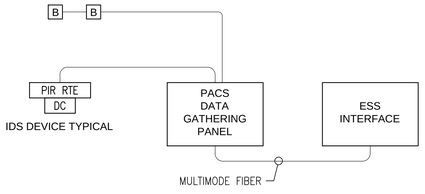

1 / ES-016 **TYPICAL INTRUSION DETECTION SCHEMATIC**
SCALE: N.T.S.

PROFESSIONAL CERTIFICATION
I HEREBY CERTIFY THAT THESE DOCUMENTS WERE PREPARED OR APPROVED BY ME, AND THAT I AM A DULY LICENSED PROFESSIONAL ENGINEER UNDER THE LAWS OF THE STATE OF MARYLAND, LICENSE NO. 46926, EXPIRATION DATE: 06/11/17

Fully Sprinklered

100% Bid Documents, September 1, 2015

Additions:	Date:
Revisions:	

DCS Infrastructure, LLC
3249 route 112, building 4 suite 1B
Medford, N.Y. 11763 631-320-1706

Hatch Mott MacDonald

STATE OF MARYLAND — JEAN ROBERT BOUCHARD — PROFESSIONAL ENGINEER — No. 46926

Approved:

Approved: Chief, Facilities and Engineering:

Approved: Associate Chief for Maintenance And Operations, Perry Point:

Approved: Engineering Projects Supervisor

Approved: Infection Control Officer

Approved: Director, Medical Center:

Drawing Title: ELECTRICAL RISER DIAGRAMS

Approved: Associate Director for Operations: VAPAHCS PLANNING AND ENGINEERING

Project Title: POTABLE WATER SYSTEM IMPROVEMENTS - TIER 1
PERRY POINT MD
VAMC

Location: VAMC PERRY POINT, MD 21902

Date: 9/1/2015

Project No: 512A5-13-329

Scale:	Building No:	Checked:	Drawn:
N.T.S.	103	MJS	MFM

DRAWING NO: ES-016

77 OF 124

DEPARTMENT OF VETERANS AFFAIRS

ELECTRICAL PANEL SCHEDULE: MDP

CKT#	DESCRIPTION SIDE 1	QTY	UNIT KVA	LOAD PER PHASE (V.A.) A	B	C	TRIP	POLES		POLES	TRIP	LOAD PER PHASE (V.A.) A	B	C	UNIT KVA	QTY	DESCRIPTION SIDE 2	CKT#
1	600A MAIN CIRCUIT BREAKER SIDE 1			0	---	---			NEUTRAL GROUND	/	/	0	---	---			SPACE	2
3				---	0	---	600	3				---	0	---				4
5				---	---	0						---	---	0				6
7	MCC1			40000	---	---				3	300	40000	---	---			MCC2	8
9				---	40000	---	300	3				---	40000	---				10
11				---	---	40000						---	---	40000				12
13	TVSS			0	---	---				3	/	0	---	---			SPARE	14
15				---	0	---	100	3				---	0	---				16
17				---	---	0						---	---	0				18
19	PANEL HVL			17558	---	---				3	80	16700	---	---			50KW CIP HEATER	20
21				---	17778	---	150	3				---	16700	---				22
23				---	---	16519						---	---	16700				24
25	BRIDGE CRANE			4700	---	---				3	45	2200	---	---			30KVA XFMR TO PANEL GEP	26
27				---	4700	---	25	3				---	1200	---				28
29				---	---	4700						---	---	2600				30
31	SPARE			0	---	---				3	70	16151	---	---			75KVA XFMR TO PANEL RP	32
33				---	0	---	\	\				---	14952	---				34
35				---	---	0						---	---	16792				36
37	CLARIFIER CONTROL PANEL 1			750	---	---				3	40	750	---	---			CLARIFIER CONTROL PANEL 2	38
39				---	750	---	40	3				---	750	---				40
41				---	---	750						---	---	750				42
			SUBTOTAL, LEFT	63008	63228	61969						75801	73602	76842	SUBTOTAL, RIGHT			
												138809	136830	138811	SUBTOTAL, LEFT & RIGHT			

VOLTAGE (1PH/3PH) : 277/480V
PANEL AMPS : 600A
MAIN BKR : 600A
MAIN LUGS : 600A

WIRES : 4W
HEIGHT : 86"
WIDTH : 44.25"
DEPTH : 9.5"

SHORT CIRCUIT : 61,189A

SERVICE : ATS
LOCATION : ELECTRICAL ROOM
MANUFACTURE & MODEL # : SQUARE D I-LINE HCR864T

TOTAL VA : 414450
TOTAL AMPS : 499.34

ELECTRICAL PANEL SCHEDULE: HVL

CKT#	DESCRIPTION	QTY	UNIT KVA	LOAD PER PHASE (V.A.) A	B	C	TRIP	POLES		POLES	TRIP	LOAD PER PHASE (V.A) A	B	C	UNIT KVA	QTY	DESCRIPTION	CKT#
1	LIGHTING HIGH BAY PROCESS AREAS	17	\	2125	---	---	20	1	NEUTRAL GROUND	3	25	3900	---	---	/	1	H&V-1	2
3	LIGHTING HIGH BAY PROCESS AREAS	12	\	---	1500	---	20	1				---	3900	---				4
5	LIGHTING NON-CHEMICAL ROOMS	23	\	---	---	996	20	1				---	---	3900				6
7	LIGHTING CHEMICAL ROOMS	22	\	1012	---	---	20	1		3	25	3900	---	---	/	1	H&V-1	8
9	LIGHTING SECOND LEVEL	31	\	---	1412	---	20	1				---	3900	---				10
11	LIGHTING OUTSIDE WALL PACK	19	\	---	---	437	20	1				---	---	3900				12
13	LIGHTING LOWER LEVEL	7	\	322	---	---	20	1		3	20	4500	---	---	/	1	ACCU-1	14
15	LIGHTING CONTROL PANEL	\	\	---	0	---	20	1				---	4500	---				16
17	LIGHTING EXIT AND EMERGENCY WALL PACKS	\	\	---	---	500	20	1				---	---	4500				18
19	SITE LIGHTS	\	\	250	---	---	20	1		3	15	443	---	---	/	1	P-1A 3/4HP	20
21	SECURITY FLOOD LIGHTS	\	\	---	1680	---	20	1				---	443	---				22
23	SECURITY FLOOD LIGHTS	\	\	---	---	1400	20	1				---	---	443				24
25	ATTIC LIGHTS	13	\	663	---	---	20	1		3	15	443	---	---	/	1	P-1B 3/4HP	26
27	SPARE	\	\	---	0	---	\	\				---	443	---				28
29	SPARE	\	\	---	---	0	\	\				---	---	443				30
31	SPARE	\	\	0	---	---	\	\		/	/	0	---	---	/	/	SPARE	32
33	SPARE	\	\	---	0	---	\	\		/	/	---	0	---	/	/	SPARE	34
35	SPARE	\	\	---	---	0	\	\		/	/	---	---	0	/	/	SPARE	36
37	SPARE	\	\	0	---	---	\	\		/	/	0	---	---	/	/	SPARE	38
39	SPARE	\	\	---	0	---	\	\		/	/	---	0	---	/	/	SPARE	40
41	SPARE	\	\	---	---	0	\	\		/	/	---	---	0	/	/	SPARE	42
			SUBTOTAL, LEFT	4372	4592	3333						13186	13186	13186	SUBTOTAL, RIGHT			
												17558	17778	16519	SUBTOTAL, LEFT & RIGHT			

VOLTAGE (1PH/3PH) : 277/480V
PANEL AMPS : 225A
MAIN BKR : ---
MAIN LUGS : 100A

WIRES : 4W
HEIGHT : 56"
WIDTH : 20"
DEPTH : 5.75"

SHORT CIRCUIT : 48,488A

SERVICE : MDP 150A C/B
LOCATION : ELECTRICAL ROOM
MANUFACTURE & MODEL # : SQUARE D NF

TOTAL VA : 51855
TOTAL AMPS : 62.48

ELECTRICAL PANEL SCHEDULE: GEP

CKT#	DESCRIPTION	QTY	UNIT KVA	LOAD PER PHASE (V.A.) A	B	C	TRIP	POLES		POLES	TRIP	LOAD PER PHASE (V.A) A	B	C	UNIT KVA	QTY	DESCRIPTION	CKT#
1	GEN CONTROL PANEL 1	\	\	1000	---	---	20	1	NEUTRAL GROUND	1	20	1000	---	---	/	/	GEN CONTROL PANEL 2	2
3	BATTERY CHARGER 1	\	\	---	500	---	20	1		1	20	---	500	---	/	/	BATTERY CHARGER 2	4
5	JACKET HEATER 1	\	\	---	---	1000	20	1		1	20	---	---	1000	/	/	JACKET HEATER 2	6
7	INTAKE LOUVER ACTUATOR 1	\	\	100	---	---	20	1		1	20	100	---	---	/	/	INTAKE LOUVER ACTUATOR 2	8
9	EXHAUST LOUVER ACTUATOR 1	\	\	---	100	---	20	1		1	20	---	100	---	/	/	EXHAUST LOUVER ACTUATOR 2	10
11	WATER PUMP 1	\	\	---	---	300	20	1		1	20	---	---	300	/	/	WATER PUMP 2	12
13	X	\	\	0	---	---	\	\		/	/	0	---	---	/	/	X	14
15	X	\	\	---	0	---	\	\		/	/	---	0	---	/	/	X	16
17	X	\	\	---	---	0	\	\		/	/	---	---	0	/	/	X	18
19	X	\	\	0	---	---	\	\		/	/	0	---	---	/	/	X	20
21	X	\	\	---	0	---	\	\		/	/	---	0	---	/	/	X	22
23	X	\	\	---	---	0	\	\		/	/	---	---	0	/	/	X	24
25	X	\	\	0	---	---	\	\		/	/	0	---	---	/	/	X	26
27	X	\	\	---	0	---	\	\		/	/	---	---	0	/	/	X	28
29	X	\	\	---	---	0	\	\		/	/	---	---	0	/	/	X	30
			SUBTOTAL, LEFT	1100	600	1300						1100	600	1300	SUBTOTAL, RIGHT			
												2200	1200	2600	SUBTOTAL, LEFT & RIGHT			

VOLTAGE (1PH/3PH) : 120/208V
PANEL AMPS : 225A
MAIN BKR : 100A
MAIN LUGS : 100A

WIRES : 4W
HEIGHT : 44
WIDTH : 20"
DEPTH : 5.75"

SHORT CIRCUIT : 6,193A

SERVICE : MDP TO 30KVA XFMR
LOCATION : ELECTRICAL ROOM
MANUFACTURE & MODEL # : SQUARE D NQ

TOTAL VA : 6000
TOTAL AMPS : 16.67

NOTE:
BASIS OF DESIGN SQUARE D - SCHNEIDER ELECTRIC

PROFESSIONAL CERTIFICATION
I HEREBY CERTIFY THAT THESE DOCUMENTS WERE PREPARED OR APPROVED BY ME, AND THAT I AM A DULY LICENSED PROFESSIONAL ENGINEER UNDER THE LAWS OF THE STATE OF MARYLAND, LICENSE NO. 46926, EXPIRATION DATE: 06/11/17

Fully Sprinklered

100% Bid Documents, September 1, 2015

Additions: Date:

Revisions:

DCS Infrastructure, LLC
3249 route 112, building 4 suite 1B
Medford, N.Y. 11763 631-320-1706

Hatch Mott MacDonald

STATE OF MARYLAND — MICHAEL JOSEPH SCHIFFER — 46926 — PROFESSIONAL ENGINEER

Approved:
Approved: Chief, Facilities and Engineering:
Approved: Associate Chief for Maintenance And Operations, Perry Point:
Approved: Engineering Projects Supervisor
Approved: Infection Control Officer

Drawing Title: PANEL SCHEDULES 1 OF 2

Project Title: POTABLE WATER SYSTEM IMPROVEMENTS - TIER 1
PERRY POINT MD
VAMC

Date: 9/1/2015
Project No: 512A5-13-329

Approved: Associate Director for Operations: VAPAHCS PLANNING AND ENGINEERING

Scale: NONE | Building No: 103 | Checked: MJS | Drawn: MFM

DRAWING NO: ES-017

Approved: Director, Medical Center:

Location: VAMC PERRY POINT, MD 21902

78 OF 124

DEPARTMENT OF VETERANS AFFAIRS

ELECTRICAL PANEL SCHEDULE: PP1

CKT#	DESCRIPTION	QTY	UNIT KVA	LOAD PER PHASE (V.A.) A	B	C	TRIP	POLES		POLES	TRIP	LOAD PER PHASE (V.A) A	B	C	UNIT KVA	QTY	DESCRIPTION	CKT#
1	STRAINER 1	\	\	900	---	---	20	1		1	20	90	---	---	/	/	CORROS INHIB FEED PUMP 1	2
3	AIR DRIER 1	\	\	---	300	---	20	1		1	20	---	300	---	/	/	CITRIC ASID FEED PUMP 1	4
5	POLYAUM FEED PUMP 1	\	\	---	---	90	20	1		1	20	---	---	90	/	/	SODIUM BISULF FEED PUMP 1	6
7	POLYAUM ISO VALVE	\	\	90	---	---	20	1		1	20	90	---	---	/	/	HYDROCHL ACID FEED PUMP 1	8
9	ALUM SULF FEED PUMP 1	\	\	---	90	---	20	1		1	20	---	1000	---	/	/	CHLOR DIOXIDE GEN SKID	10
11	ALUM SULF ISO VALVE	\	\	---	---	90	20	1		1	20	---	---	343	/	/	RAW WATER SAMPLE PUMP	12
13	SODA ASH PREP SYST	\	\	1000	---	---	20	1		1	20	343	---	---	/	/	CLAR TRAIN 1 INLET SAMPLE	14
15	SODA ASH DUST COL	\	\	---	560	---	20	1		1	20	---	343	---	/	/	CLAR TRAIN 1 OUTLET SAMPLE	16
17	SODA ASH FEED PUMP 1	\	\	---	---	560	20	1		1	20	---	---	343	/	/	MEMBRANE EQ SAMPLE PUMP	18
19	SOD HYPCL FEED PUMP 1	\	\	900	---	---	20	1		1	20	343	---	---	/	/	PRE-CLEARWELL SAMPLE PUMP	20
21	SOD HYPCL FEED PUMP 3	\	\	---	900	---	20	1		1	20	---	343	---	/	/	POST-CLEARWELL SAMPLE PUMP	22
23	SOD HYPCL FEED PUMP 5	\	\	---	---	900	20	1		1	20	---	---	1000	/	/	RTU-1 CONTROL PANEL	24
25	SOD HYPCL FEED PUMP 7	\	\	247	---	---	20	1		1	20	0	---	---	/	/	RIO 2-1	26
27	SOD HYPCL ISO VALVE	\	\	---	90	---	20	1		1	20	---	0	---	/	/	RIO 2-3	28
29	MAGNETIC FLOW METER 1	\	\	---	---	0	20	1		1	20	---	---	0	/	/	BACKWASH EQUIPMENT	30
31	SPARE	\	\	0	---	---	20	1		1	20	0	---	---	/	/	SPARE	32
33	SPARE	\	\	---	0	---	20	1		1	20	---	0	---	/	/	SPARE	34
35	SPARE	\	\	---	---	0	20	1		1	20	---	---	0	/	/	SPARE	36
37	SPARE	\	\	0	---	---	20	1		1	20	0	---	---	/	/	SPARE	38
39	SPARE	\	\	---	0	---	20	1		1	20	---	0	---	/	/	SPARE	40
41	SPARE	\	\	---	---	0	20	1		1	20	---	---	0	/	/	SPARE	42
			SUBTOTAL, LEFT	3137	1940	1640						866	1986	1776	SUBTOTAL, RIGHT			
												4003	3926	3416	SUBTOTAL, LEFT & RIGHT			

NEUTRAL GROUND

VOLTAGE (1PH/3PH) : 120/208V
PANEL AMPS : 225A
MAIN BKR : ---
MAIN LUGS : 100A

WIRES : 4W
HEIGHT : 50"
WIDTH : 20"
DEPTH : 5.75"

SHORT CIRCUIT : 22,000A

SERVICE : MCC1 100A C/B
LOCATION : ELECTRICAL ROOM
MANUFACTURE & MODEL # : SQUARE D NQ

TOTAL VA : 11345
TOTAL AMPS : 31.51

ELECTRICAL PANEL SCHEDULE: PP2

CKT#	DESCRIPTION	QTY	UNIT KVA	LOAD PER PHASE (V.A.) A	B	C	TRIP	POLES		POLES	TRIP	LOAD PER PHASE (V.A) A	B	C	UNIT KVA	QTY	DESCRIPTION	CKT#
1	STRAINER 2	\	\	900	---	---	20	1		1	20	90	---	---	/	/	CORROS INHIB FEED PUMP 2	2
3	AIR DRIER 2	\	\	---	300	---	20	1		1	20	---	300	---	/	/	CITRIC ASID FEED PUMP 2	4
5	POLYAUM FEED PUMP 2	\	\	---	---	90	20	1		1	20	---	---	90	/	/	SODIUM BISULF FEED PUMP 2	6
7	SPARE	\	\	0	---	---	20	1		1	20	90	---	---	/	/	HYDROCHL ACID FEED PUMP 2	8
9	ALUM SULF FEED PUMP 2	\	\	---	90	---	20	1		1	20	---	0	---	/	/	SPARE	10
11	SPARE	\	\	---	---	0	20	1		1	20	---	---	0	/	/	SPARE	12
13	SPARE	\	\	0	---	---	20	1		1	20	343	---	---	/	/	CLAR TRAIN 2 INLET SAMPLE	14
15	SPARE	\	\	---	0	---	20	1		1	20	---	343	---	/	/	CLAR TRAIN 2 OUTLET SAMPLE	16
17	SODA ASH FEED PUMP 2	\	\	---	---	560	20	1		1	20	---	---	0	/	/	SPARE	18
19	SOD HYPCL FEED PUMP 2	\	\	900	---	---	20	1		1	20	0	---	---	/	/	SPARE	20
21	SOD HYPCL FEED PUMP 4	\	\	---	900	---	20	1		1	20	---	343	---	/	/	POST-CLEARWELL SAMPLE PUMP	22
23	SOD HYPCL FEED PUMP 6	\	\	---	---	900	20	1		1	20	---	---	1000	/	/	RTU-2 CONTROL PANEL	24
25	SOD HYPCL FEED PUMP 8	\	\	247	---	---	20	1		1	20	0	---	---	/	/	RIO-2-2	26
27	SPARE	\	\	---	0	---	20	1		1	20	---	0	---	/	/	SPARE	28
29	MAGNETIC FLOW METER 2	\	\	---	---	0	20	1		1	20	---	---	0	/	/	SPARE	30
31	SPARE	\	\	0	---	---	20	1		1	20	0	---	---	/	/	SPARE	32
33	SPARE	\	\	---	0	---	20	1		1	20	---	0	---	/	/	SPARE	34
35	SPARE	\	\	---	---	0	20	1		1	20	---	---	0	/	/	SPARE	36
37	SPARE	\	\	0	---	---	20	1		1	20	0	---	---	/	/	SPARE	38
39	SPARE	\	\	---	0	---	20	1		1	20	---	0	---	/	/	SPARE	40
41	SPARE	\	\	---	---	0	20	1		1	20	---	---	0	/	/	SPARE	42
			SUBTOTAL, LEFT	2047	1290	1550						523	986	1090	SUBTOTAL, RIGHT			
												2570	2276	2640	SUBTOTAL, LEFT & RIGHT			

NEUTRAL GROUND

VOLTAGE (1PH/3PH) : 120/208V
PANEL AMPS : 225A
MAIN BKR : ---
MAIN LUGS : 100A

WIRES : 4W
HEIGHT : 50"
WIDTH : 20"
DEPTH : 5.75"

SHORT CIRCUIT : 22,000A

SERVICE : MCC2 100A C/B
LOCATION : ELECTRICAL ROOM
MANUFACTURE & MODEL # : SQUARE D NQ

TOTAL VA : 7486
TOTAL AMPS : 20.79

ELECTRICAL PANEL SCHEDULE: RP

CKT#	DESCRIPTION	QTY	UNIT KVA	LOAD PER PHASE (V.A.) A	B	C	TRIP	POLES		POLES	TRIP	LOAD PER PHASE (V.A) A	B	C	UNIT KVA	QTY	DESCRIPTION	CKT#
1	GENERAL RECEPTACLES PROCESS PLANT	3		540	---	---	20	1		1	20	540	---	---		3	GENERAL RECEPTACLES GENERATOR ROOM	2
3	GENERAL RECEPTACLES PROCESS PLANT	3		---	540	---	20	1		1	20	---	360	---		2	GENERAL RECEPTACLES HIGH VOLTAGE ROOM	4
5	GENERAL RECEPTACLES PROCESS PLANT	3		---	---	540	20	1		1	20	---	---	180		1	GENERAL RECEPTACLES BATHROOM	6
7	GENERAL RECEPTACLES PROCESS PLANT	3		540	---	---	20	1		1	20	900	---	---		5	GENERAL RECEPTACLES LAB	8
9	GENERAL RECEPTACLES PROCESS PLANT	3		---	540	---	20	1		1	20	---	720	---		4	GENERAL RECEPTACLES LAB	10
11	GENERAL RECEPTACLES PROCESS PLANT	2		---	---	360	20	1		1	20	---	---	720		4	GENERAL RECEPTACLE OFFICE	12
13	J-BOX WATER FOUNTAIN PROCESS PLANT	1		330	---	---	20	1		1	20	540	---	---		3	GENERAL RECEPTACLE OFFICE / CONTROL ROOMS	14
15	J-BOX HAND DRYER BATHROOM	1		---	1440	---	20	1		1	20	---	720	---		4	GENERAL RECEPTACLE CONTROL ROOM	16
17	BHW-1	1		---	---	1800	20	1		1	20	---	---	900		5	GENERAL RECEPTACLE COMPRESSOR / HVAC ROOMS	18
19	BHW-2	1		1800	---	---	20	1		1	20	180	---	---		1	GENERAL RECEPTACLE ACID ROOM	20
21	GENERAL RECEPTACLE MEZZANINE LEVEL	3		---	540	---	20	1		1	20	---	180	---		1	GENERAL RECEPTACLE SODIUM HYDROCHLORIDE ROOM	22
23	GENERAL RECEPTACLE MEZZANINE LEVEL	4		---	---	720	20	1		1	20	---	---	180		1	GENERAL RECEPTACLE CHLORINE DIOXIDE ROOM	24
25	GENERAL RECEPTACLE MEZZANINE LEVEL	2		360	---	---	20	1		1	20	180	---	---		1	GENERAL RECEPTACLE SODA ASH ROOM	26
27	GENERAL RECEPTACLE LOWER LEVEL	2		---	360	---	20	1		1	20	---	180	---		1	GENERAL RECEPTACLE COAGULANT ROOM	28
29	QUAD RECEPTACLE IT CLOSET	1		---	---	600	20	1		1	20	---	---	1176		1	SUMP PUMP GFCI DUPLEX LOWER LEVEL	30
31	QUAD RECEPTACLE IT CLOSET	1		600	---	---	20	1		2	20	1000	---	---			MCU CONTROL FOR IU-1,2,3,4,5,6,7,8, RD-A, RD-B	32
33	QUAD RECEPTACLE IT CLOSET	1		---	600	---	20	1				---	1000	---				34
35	QUAD RECEPTACLE IT CLOSET	1		---	---	600	20	1		1	20	---	---	1400		2	MOTOR OPERATED LOUVER (1/4HP)	36
37	EMERGENCY EYEWASH	1		1440	---	---	20	1		3	20	6576	---	---			SUB PANEL	38
39	EMERGENCY EYEWASH	1		---	1440	---	20	1				---	5728	---				40
41	EMERGENCY EYEWASH	1		---	---	1440	20	1				---	---	4928				42
43	P-BA 3/4HP			1680	---	---	25	1		1	20	85	---	---			UH-5, UH-6, UH-7, UH-8	44
45	P-BB 3/4HP			---	1680	---	25	1		1	20	---	64	---			UH-1, UH-2, UH-3, UH-4	46
47	GENERAL GFCI RECEPTACLES OUTSIDE			---	---	360	20	1		1	20	---	---	528			P-FP2 1/6HP	48
49	GENERAL GFCI RECEPTACLES OUTSIDE			540	---	---	20	1		1	20	540	---	---			GENERAL RECEPTACLES LOUNGE	50
51	GENERAL GFCI RECEPTACLES OUTSIDE			---	360	---	20	1		1	20	---	540	---			GENERAL RECEPTACLES LOUNGE	52
53	GENERAL GFCI RECEPTACLES OUTSIDE			---	---	360	20	1		1	20	---	---	720			GENERAL RECEPTACLES LOUNGE	54
			SUBTOTAL, LEFT	5610	5460	6060						10541	9492	10732	SUBTOTAL, RIGHT			
												16151	14952	16792	SUBTOTAL, LEFT & RIGHT			

NEUTRAL GROUND

VOLTAGE (1PH/3PH) : 120/208V
PANEL AMPS : 250A
MAIN BKR : 250A
MAIN LUGS : 250A

WIRES : 4W
HEIGHT : 68"
WIDTH : 20"
DEPTH : 5.75"

SHORT CIRCUIT : 10,000A

SERVICE : MDP TO 75KVA XFMR
LOCATION : ELECTRICAL ROOM
MANUFACTURE & MODEL # : SQUARE D NQ

TOTAL VA : 47895
TOTAL AMPS : 133.04

ELECTRICAL PANEL SCHEDULE: RP

CKT#	DESCRIPTION	QTY	UNIT KVA	LOAD PER PHASE (V.A.) A	B	C	TRIP	POLES		POLES	TRIP	LOAD PER PHASE (V.A) A	B	C	UNIT KVA	QTY	DESCRIPTION	CKT#
55	GFCI SUMP PUMP IN FLOW METER CHAMBER			1178	---	---	20	1		1	20	1178	---	---			GFCI SUMP IN BOOSTER PUMPING STATION	56
57	LIGHT AND GFCI RECEPTACLES FLOW METER CHAMBER			---	540	---	20	1		1	20	---	540	---			LIGHT AND GFCI RECEPTACLES BOOSTER PUMP STATION	58
59	P-FP1 1/6HP			---	---	528	20	1		1	20	---	---	500			ATC MECHANICAL CONTROLS	60
61	REF-1			528	---	---	20	1		1	20	500	---	---			ATC MECHANICAL CONTROLS	62
63	REF-2			---	696	---	20	1		1	20	---	1176	---			SUMP PUMP FUEL VAULT	64
65	REF-2			---	---	696	20	1		1	20	---	---	540			LIGHTS AND RECEPTACLES FUEL VAULT	66
67	REF-2			696	---	---	20	1		1	20	528	---	---			RCP-1	68
69	TEF-1			---	528	---	20	1		1	20	---	1000	---			WH-1 & WH-2	70
71	REF-1			---	---	528	20	1		1	20	---	---	0			FUEL MAINTENANCE SYSTEM & MONITOR	72
73	REF-1			528	---	---	20	1		1	20	0	---	---			FUEL LEAK / LEVEL MONITORING SYSTEM	74
75	REF-1			---	528	---	20	1		1	20	---	0	---			SPARE	76
77	REF-3			---	---	696	20	1		1	20	---	---	0			SPARE	78
79	EMERGENCY EYE WASH			1440	---	---	20	1		1	20	0	---	---			SPARE	80
81	EMERGENCY EYE WASH			---	720	---	20	1		1	20	---	0	---			SPARE	82
83	EMERGENCY EYE WASH			---	---	1440	20	1		1	20	---	---	0			SPARE	84
85	SPARE			0	---	---	20	1		1	20	0	---	---			SPARE	86
87	SPARE			---	0	---	20	1		1	20	---	0	---			SPARE	88
89	SPARE			---	---	0	20	1		1	20	---	---	0			SPARE	90
91	PREPARED SPACE			0	---	---	\	\		/	/	0	---	---			PREPARED SPACE	92
93	PREPARED SPACE			---	0	---	\	\		/	/	---	0	---			PREPARED SPACE	94
95	PREPARED SPACE			---	---	0	\	\		/	/	---	---	0			PREPARED SPACE	96
97	PREPARED SPACE			0	---	---	\	\		/	/	0	---	---			PREPARED SPACE	98
99	PREPARED SPACE			---	0	---	\	\		/	/	---	0	---			PREPARED SPACE	100
101	PREPARED SPACE			---	---	0	\	\		/	/	---	---	0			PREPARED SPACE	102
103	PREPARED SPACE			0	---	---	\	\		/	/	0	---	---			PREPARED SPACE	104
105	PREPARED SPACE			---	0	---	\	\		/	/	---	0	---			PREPARED SPACE	106
107	PREPARED SPACE			---	---	0	\	\		/	/	---	---	0			PREPARED SPACE	108
			SUBTOTAL, LEFT	4370	3012	3888						2206	2716	1040	SUBTOTAL, RIGHT			
												6576	5728	4928	SUBTOTAL, LEFT & RIGHT			

NEUTRAL GROUND

VOLTAGE (1PH/3PH) : 120/208V
PANEL AMPS : 250A
MAIN BKR : 250A
MAIN LUGS : 250A

WIRES : 4W
HEIGHT : 68"
WIDTH : 20"
DEPTH : 5.75"

SHORT CIRCUIT : 10,000A

SERVICE : MDP TO 75KVA XFMR
LOCATION : ELECTRICAL ROOM
MANUFACTURE & MODEL # : SQUARE D NQ

TOTAL VA : 17232
TOTAL AMPS : 47.87

NOTE:
BASIS OF DESIGN SQUARE D - SCHNEIDER ELECTRIC

PROFESSIONAL CERTIFICATION
I HEREBY CERTIFY THAT THESE DOCUMENTS WERE PREPARED OR APPROVED BY ME, AND THAT I AM A DULY LICENSED PROFESSIONAL ENGINEER UNDER THE LAWS OF THE STATE OF MARYLAND, LICENSE NO. 46926, EXPIRATION DATE: 06/11/17

Fully Sprinklered

100% Bid Documents, September 1, 2015

Additions: Date:

Revisions:

DCS Infrastructure, LLC
3249 route 112, building 4 suite 1B
Medford, N.Y. 11763 631-320-1706

Hatch Mott MacDonald

Approved:

Approved: Chief, Facilities and Engineering:

Approved: Associate Chief for Maintenance And Operations, Perry Point:

Approved: Engineering Projects Supervisor

Approved: Infection Control Officer

Drawing Title: PANEL SCHEDULES 2 OF 2

Project Title: POTABLE WATER SYSTEM IMPROVEMENTS - TIER 1
PERRY POINT MD
VAMC

Date: 9/1/2015

Project No: 512A5-13-329

Approved: Associate Director for Operations: VAPAHCS PLANNING AND ENGINEERING

Approved: Director, Medical Center:

Scale: NONE | Building No: 103 | Checked: MJS | Drawn: MFM

Location: VAMC PERRY POINT, MD 21902

DRAWING NO: ES-018

79 OF 124

DEPARTMENT OF VETERANS AFFAIRS

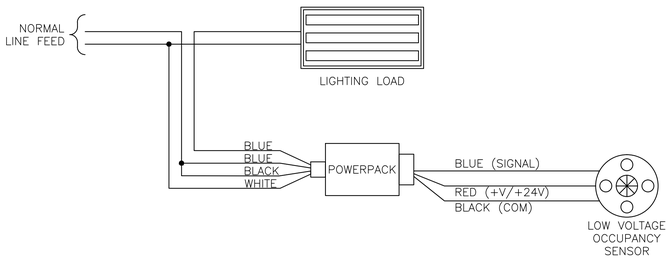

GENERAL NOTE:

1. ALL LIGHTS ARE ON GENERALTOR FOR BACK UP POWER.

NOTES:

1. REFER TO MANUFACTURER'S DATA SHEETS AND INSTALLATION INSTRUCTIONS PRIOR TO INSTALLATION.
2. LINE FEED 120/230/277 VAC, 60Hz.
3. GROUND NOT SHOWN. GROUND DEVICES PER APPLICABLE NATIONAL AND LOCAL CODES AND BEST PRACTICES.
4. FOR EMERGENCY POWER SITUATIONS, ILLUSTRATIONS ASSUME TRANSFER SWITCH BY OTHERS UPSTREAM OF SHOWN DEVICES.
5. LINE VOLTAGE LOAD NOT TO EXCEED CONTACT RATING PER DEVICE SPECIFICATIONS.
6. ALL LOW-VOLTAGE DEVICES CONSUME CURRENT. SEE PRODUCT LITERATURE FOR SPECIFIC CURRENT DRAW.
7. MAXIMUM RUN LENGTH FOR ANALOG WIRING IS 1000' @ #18 AWG.
8. SENSORS WIRED IN PARALLEL WILL CAUSE LINE VOLTAGE RELAY CLOSURE WHEN OCCUPANCY IS DETECTED BY ANY UNIT.
9. SENSORS SHOULD BE LOCATED A MINIMUM OF SIX (6) FEET FROM HVAC SUPPLY/RETURN VENTS. CONTRACTOR IS RESPONSIBLE FOR ADJUSTING SENSOR LOCATIONS TO ALLOW FOR PROPER OPERATION.
10. CONTRACTOR IS RESPONSIBLE FOR PROPER SENSITIVITY AND TIME DELAY SETTINGS FOR NON-ADAPTIVE PRODUCTS, FOLLOWING THE MANUFACTURER'S RECOMMENDED PLACEMENT, AND FIELD VERIFICATION OF CIRCUITS WITH RESPECT TO POWER PACK PLACEMENT.
11. CONTRACTOR IS RESPONSIBLE FOR COORDINATING THE OPERATIONAL OPTIONS OF SENSORS AND POWER PACKS WITH THE SPECIFIC WORK REQUIREMENTS.
    - WORK RELEVANT ENERGY CODE REQUIREMENTS AFFECT CIRCUITS TO BE CONTROLLED AND THEIR CONTROL CHARACTERISTICS.
    - ONE POWER PACK IS REQUIRED FOR EACH CONTROLLED CIRCUIT.
    - REFER TO POWER PACK DATA SHEET FOR POWER OUTPUT AND INSTALLATION GUIDE FOR MAXIMUM NUMBER OF SENSORS CONNECTED TO A POWER PACK.
    - IF MULTIPLE CIRCUITS ARE TO BE CONTROLLED BY A SENSOR, AUXILIARY RELAYS MAY BE USED IN CONJUNCTION WITH A POWER PACK.
14. DO NOT EXCEED RELAY RATING(S) PER PRODUCT SPECIFICATIONS.
15. CEILING SENSORS MOUNTED OVER DOORWAYS SHOULD BE PLACED ONE (1) FOOT INSIDE THE THRESHOLD.
16. ALL RELAYS SHOWN IN DE-ENERGIZED STATE.
17. INDIVIDUALLY CAP OFF UNUSED LEADS.

1 / ES-019 NORMAL POWER OCCUPANCY SENSOR WIRING DIAGRAM

SCALE: N.T.S.

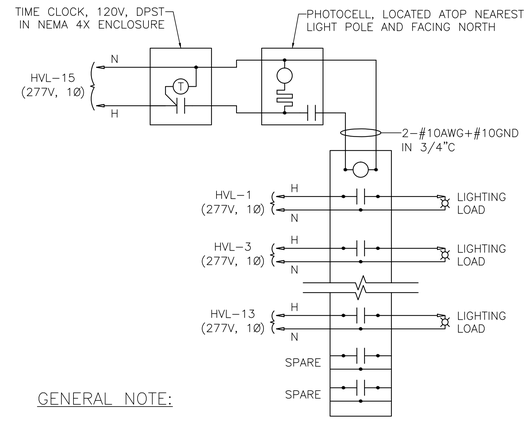

GENERAL NOTE:

1. INSTALL IN ACCORDANCE WITH MANUFACTURER'S INSTRUCTIONS.

2 / ES-019 EXTERIOR LIGHTING CONTROL DIAGRAM

SCALE: N.T.S.

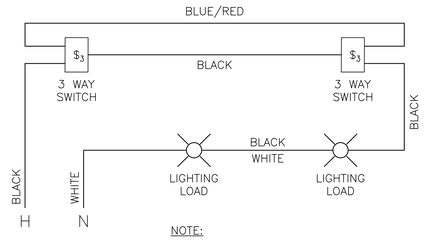

NOTE:

GROUND NOT SHOWN BUT AT ALL POINTS

3 / ES-019 3 WAY SWITCH WIRING DIAGRAMS

SCALE: N.T.S.

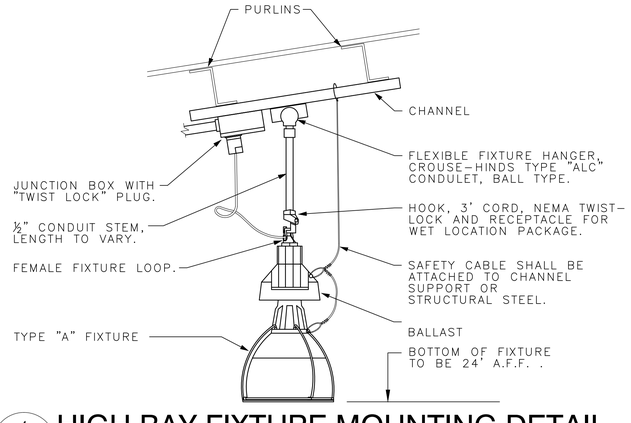

4 / ES-019 HIGH BAY FIXTURE MOUNTING DETAIL

SCALE: N.T.S.

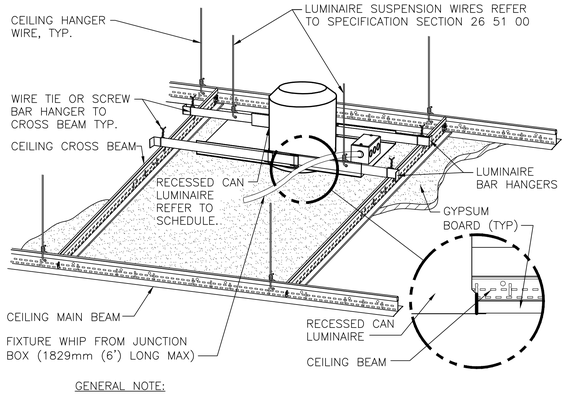

GENERAL NOTE:

1. INSTALL IN ACCORDANCE WITH MANUFACTURER'S MOUNTING INSTRUCTIONS AND USING THE RECOMMENDED MOUNTING HARDWARE.

5 / ES-019 DOWNLIGHT MOUNTING FIXTURE DETAIL

SCALE: N.T.S.

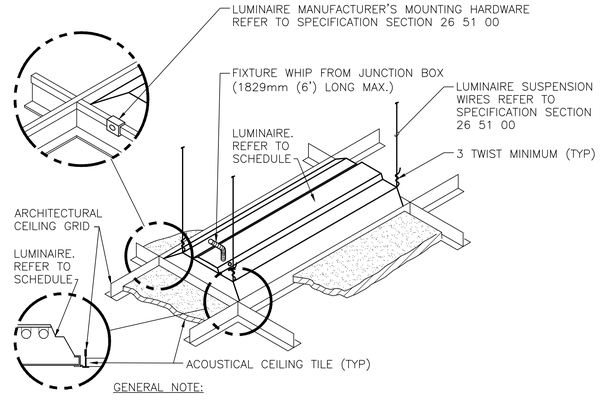

GENERAL NOTE:

1. INSTALL IN ACCORDANCE WITH MANUFACTURER'S MOUNTING INSTRUCTIONS AND USING THE RECOMMENDED MOUNTING HARDWARE.

6 / ES-019 LAY IN CELING MOUNTING FIXTURE DETAIL

SCALE: N.T.S.

Fully Sprinklered

100% Bid Documents, September 1, 2015

Additions:	Date:
Revisions:	

PROFESSIONAL CERTIFICATION
I HEREBY CERTIFY THAT THESE DOCUMENTS WERE PREPARED OR APPROVED BY ME, AND THAT I AM A DULY LICENSED PROFESSIONAL ENGINEER UNDER THE LAWS OF THE STATE OF MARYLAND, LICENSE NO. 46926, EXPIRATION DATE: 06/11/17

DCS Infrastructure, LLC
3249 route 112, building 4 suite 1B
Medford, N.Y. 11763 631-320-1706
Hatch Mott MacDonald

Approved:

Approved: Chief, Facilities and Engineering:

Approved: Associate Chief for Maintenance And Operations, Perry Point:

Approved: Engineering Projects Supervisor

Approved: Infection Control Officer

Approved: Director, Medical Center:

Drawing Title: ELECTRICAL DETAILS 1 OF 3

Approved: Associate Director for Operations: VAPAHCS PLANNING AND ENGINEERING

Project Title: POTABLE WATER SYSTEM IMPROVEMENTS - TIER 1
PERRY POINT MD
VAMC

Location: VAMC PERRY POINT, MD 21902

Scale:	Building No:	Checked:	Drawn:
NONE	103	MJS	MFM

Date: 9/1/2015

Project No: 512A5-13-329

DRAWING NO: ES-019

80 OF 124

DEPARTMENT OF VETERANS AFFAIRS

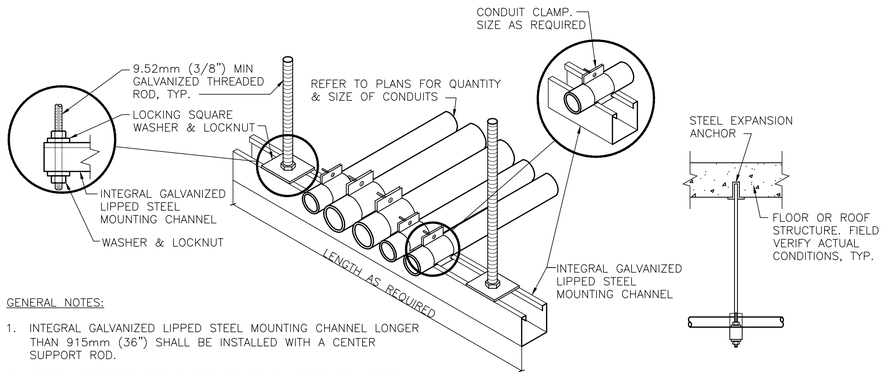

GENERAL NOTES:

1. INTEGRAL GALVANIZED LIPPED STEEL MOUNTING CHANNEL LONGER THAN 915mm (36") SHALL BE INSTALLED WITH A CENTER SUPPORT ROD.
2. FASTEN THREADED ROD TO STRUCTURE BY APPROVED METHOD PER SPECIFICATION 26 05 33, RACEWAY AND BOXES FOR ELECTRICAL SYSTEMS. FIELD VERIFY EXACT CONDITIONS.

1 / ES-020 CONDUIT TRAPEZE MOUNTING DETAIL

SCALE: N.T.S.

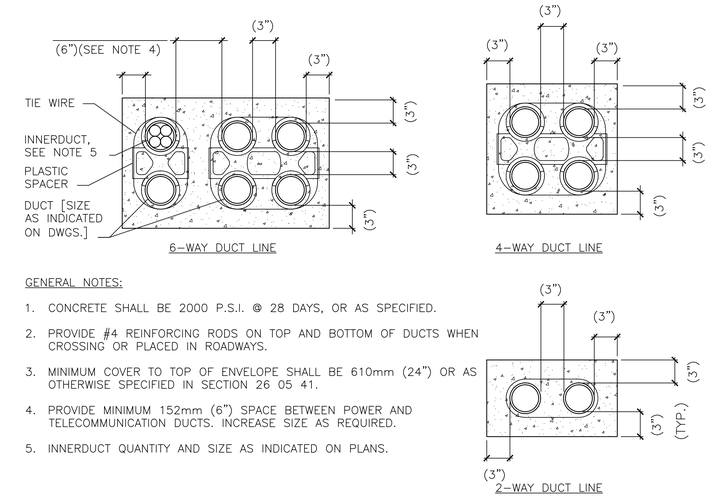

GENERAL NOTES:

1. CONCRETE SHALL BE 2000 P.S.I. @ 28 DAYS, OR AS SPECIFIED.
2. PROVIDE #4 REINFORCING RODS ON TOP AND BOTTOM OF DUCTS WHEN CROSSING OR PLACED IN ROADWAYS.
3. MINIMUM COVER TO TOP OF ENVELOPE SHALL BE 610mm (24") OR AS OTHERWISE SPECIFIED IN SECTION 26 05 41.
4. PROVIDE MINIMUM 152mm (6") SPACE BETWEEN POWER AND TELECOMMUNICATION DUCTS. INCREASE SIZE AS REQUIRED.
5. INNERDUCT QUANTITY AND SIZE AS INDICATED ON PLANS.

6 / ES-020 CONCRETE INCASED UNDERGROUND DUCT BANK DETAIL

SCALE: N.T.S.

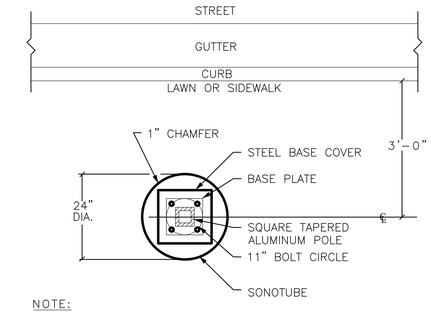

NOTE:
ALL LOCATIONS AND DIMENSIONS FOR ANCHOR BOLTS ETC. SHALL BE VERIFIED IN FIELD BY THE INSTALLING CONTRACTOR WITH BOLTS FURNISHED BY POLE MANUFACTURER.

7 / ES-020 TYP. PARKING LIGHT BASE PLAN VIEW DETAIL

SCALE: N.T.S.

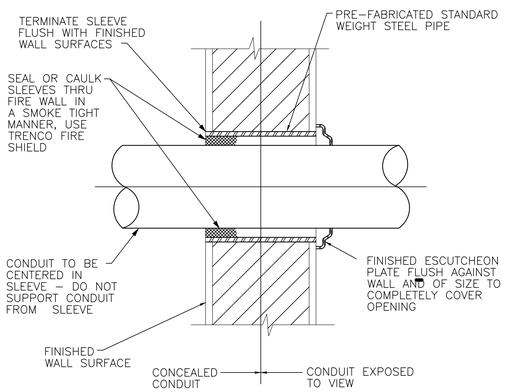

2 / ES-020 CONDUIT SLEEVE THRU INTERIOR WALL DETAIL

SCALE: N.T.S.

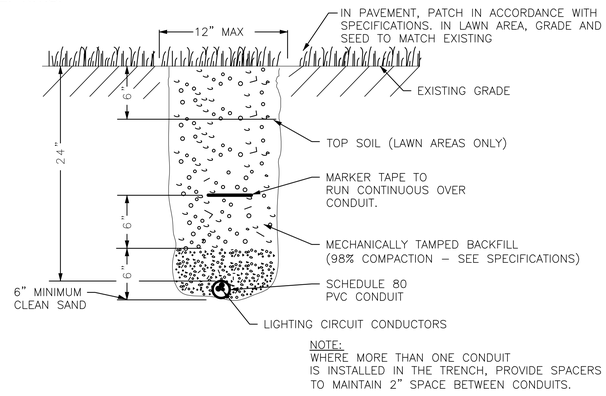

NOTE:
WHERE MORE THAN ONE CONDUIT IS INSTALLED IN THE TRENCH, PROVIDE SPACERS TO MAINTAIN 2" SPACE BETWEEN CONDUITS.

5 / ES-020 TYPICAL SITE LIGHTING TRENCH DETAIL

SCALE: N.T.S.

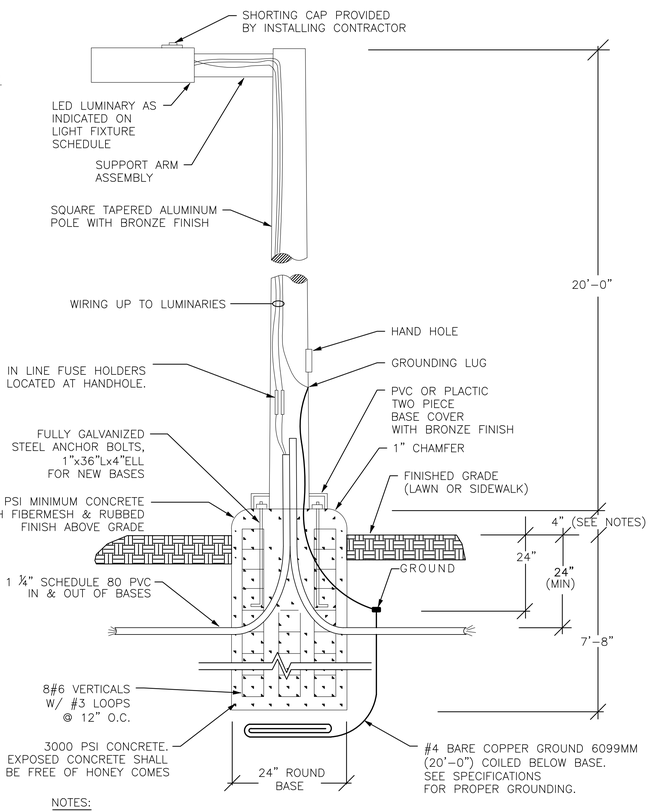

NOTES:

1. REFER TO SPECIFICATIONS SECTION 26 56 00 FOR MOUNTING AND LEVELING REQUIREMENTS.
2. LOCATE BASES ON CENTERLINES WHERE CENTERLINES ARE SHOWN ON THE PLANS, OR CENTER BASES 3'-0" BACK FROM THE CURB WHERE CENTERLINES ARE NOT SHOWN.

8 / ES-020 TYPICAL PARKING LIGHTING FIXTURE DETAIL

SCALE: N.T.S.

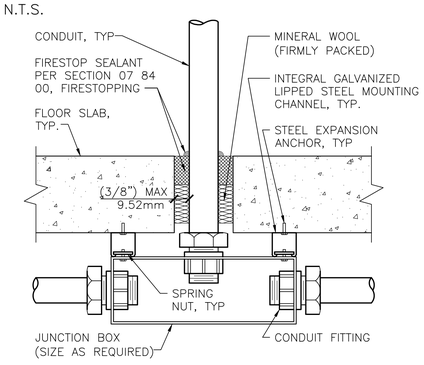

3 / ES-020 CONDUIT PENETRATION THRU FLOOR SLAB

SCALE: N.T.S.

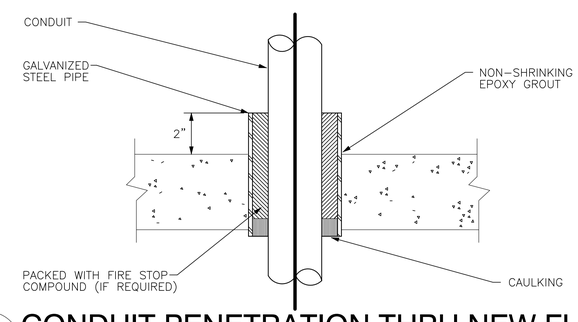

4 / ES-020 CONDUIT PENETRATION THRU NEW FLOOR

SCALE: N.T.S.

Fully Sprinklered

Additions:	Date:
Revisions:	

PROFESSIONAL CERTIFICATION
I HEREBY CERTIFY THAT THESE DOCUMENTS WERE PREPARED OR APPROVED BY ME, AND THAT I AM A DULY LICENSED PROFESSIONAL ENGINEER UNDER THE LAWS OF THE STATE OF MARYLAND, LICENSE NO. 46926, EXPIRATION DATE: 06/11/17

DCS Infrastructure, LLC
3249 route 112, building 4 suite 1B
Medford, N.Y. 11763 631-320-1706

Hatch Mott MacDonald

STATE OF MARYLAND — JEAN MARIE HOFFMAN — No. 46926 — PROFESSIONAL ENGINEER

Approved:

Approved: Chief, Facilities and Engineering:

Approved: Associate Chief for Maintenance And Operations, Perry Point:

Approved: Engineering Projects Supervisor

Approved: Infection Control Officer

Approved: Director, Medical Center:

100% Bid Documents, September 1, 2015

Drawing Title: ELECTRICAL DETAILS 2 OF 3

Approved: Associate Director for Operations: VAPAHCS PLANNING AND ENGINEERING

Project Title: POTABLE WATER SYSTEM IMPROVEMENTS - TIER 1
PERRY POINT MD
VAMC

Scale: NONE | Building No: 103 | Checked: MJS | Drawn: MFM

Location: VAMC PERRY POINT, MD 21902

Date: 9/1/2015

Project No: 512A5-13-329

DRAWING NO: ES-020

81 OF 124

DEPARTMENT OF VETERANS AFFAIRS

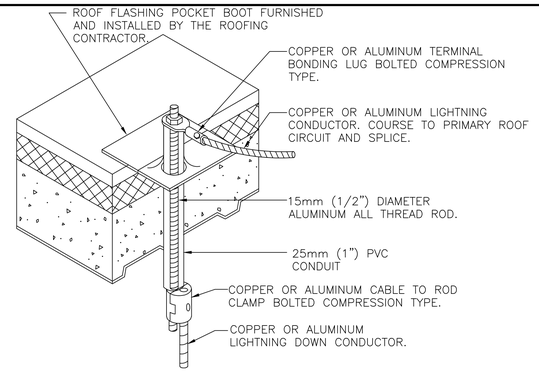

LIGHTNING CONDUCTOR DOWN LEAD PENETRATION THROUGH ROOF

2 / ES-021 SCALE: N.T.S.

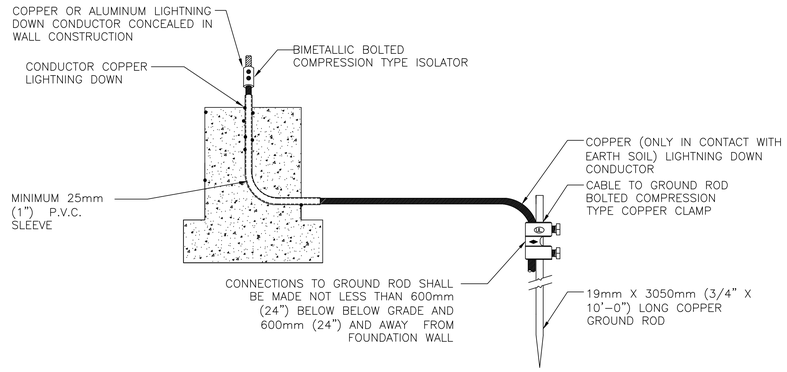

DOWN LEAD TO GROUND CONNECTION DETAIL

1 / ES-021 SCALE: N.T.S.

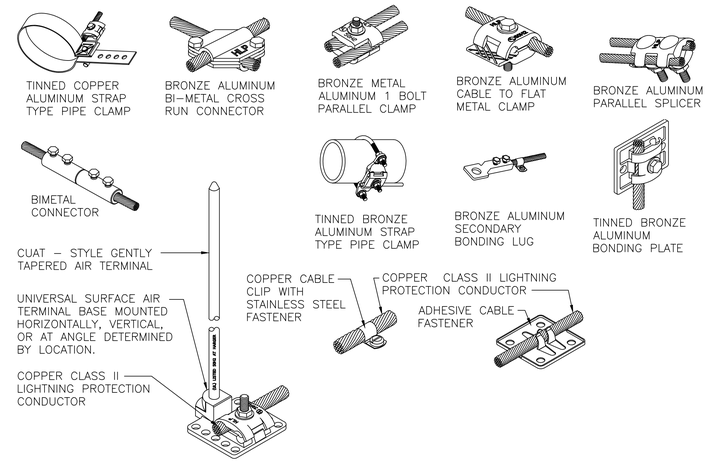

TYPICAL LIGHTNING PROTECTION CONNECTORS

3 / ES-021 SCALE: N.T.S.

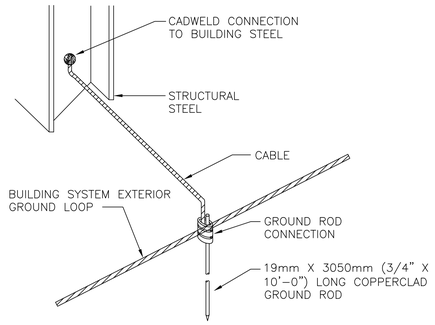

GROUND ROD STRUCTURAL STEEL CONNECTION DETAIL

4 / ES-021 SCALE: N.T.S.

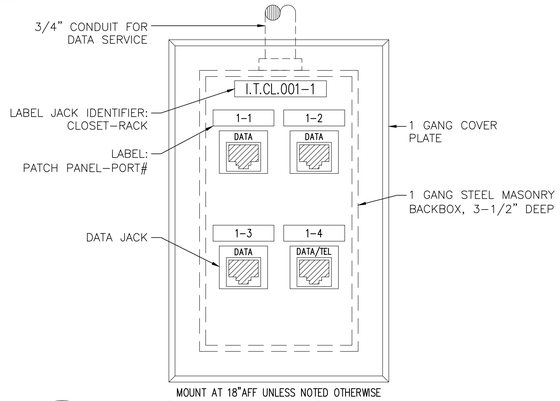

TYPICAL DATA OUTLET DETAIL

5 / ES-021 SCALE: N.T.S.

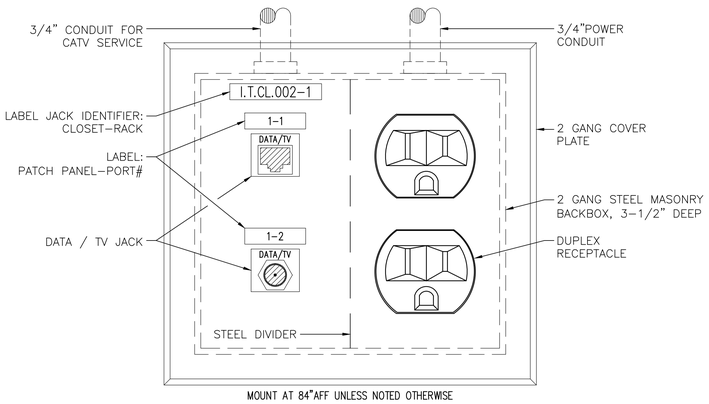

TYPICAL TELEVISION COMBINATION OUTLET DETAIL

6 / ES-021 SCALE: N.T.S.

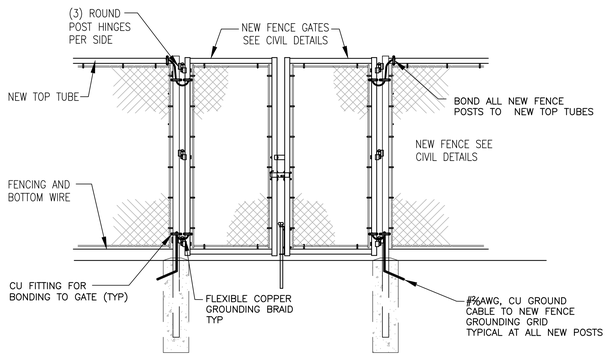

FENCING GROUNDING DETAIL

7 / ES-021 SCALE: N.T.S.

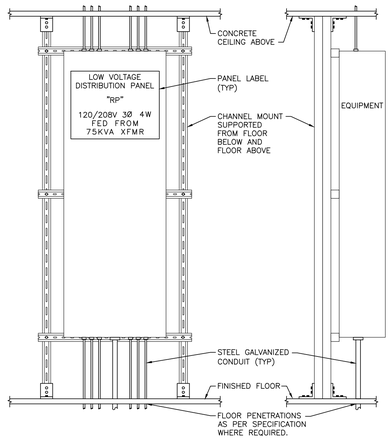

GENERAL NOTE:
1) CONTRACTOR TO ADD ADDITIONAL SUPPORTS AS NEEDED TO HAVE A FINAL PRODUCT THAT IS BOTH SECURE AND STEADY.
2) CONTRACTOR SHALL SUBMITTED SHOP DRAWINGS FOR APPROVAL.

TYPICAL CHANNEL MOUNTED PANEL DETAIL

8 / ES-021 SCALE: N.T.S.

PROFESSIONAL CERTIFICATION
I HEREBY CERTIFY THAT THESE DOCUMENTS WERE PREPARED OR APPROVED BY ME, AND THAT I AM A DULY LICENSED PROFESSIONAL ENGINEER UNDER THE LAWS OF THE STATE OF MARYLAND, LICENSE NO. 46926, EXPIRATION DATE: 06/11/17

Fully Sprinklered

100% Bid Documents, September 1, 2015

Additions:	Date:
Revisions:	

DCS Infrastructure, LLC
3249 route 112, building 4 suite 1B
Medford, N.Y. 11763 631-320-1706

Hatch Mott MacDonald

Approved:
Approved: Chief, Facilities and Engineering:
Approved: Associate Chief for Maintenance And Operations, Perry Point:
Approved: Engineering Projects Supervisor
Approved: Infection Control Officer

Drawing Title: ELECTRICAL DETAILS 3 OF 3

Approved: Associate Director for Operations: VAPAHCS PLANNING AND ENGINEERING

Approved: Director, Medical Center:

Project Title: POTABLE WATER SYSTEM IMPROVEMENTS - TIER 1
PERRY POINT MD
VAMC

Scale: NONE | Building No: 103 | Checked: MJS | Drawn: MFM

Location: VAMC PERRY POINT, MD 21902

Date: 9/1/2015
Project No: 512A5-13-329
DRAWING NO: ES-021
82 OF 124

DEPARTMENT OF VETERANS AFFAIRS