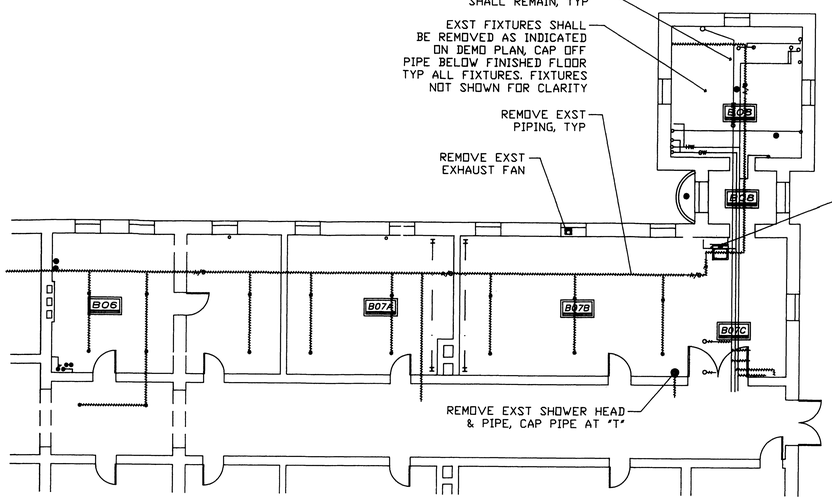

1 BASEMENT FLOOR PIPING DEMO
2-P-1 1/8"=1'-0"

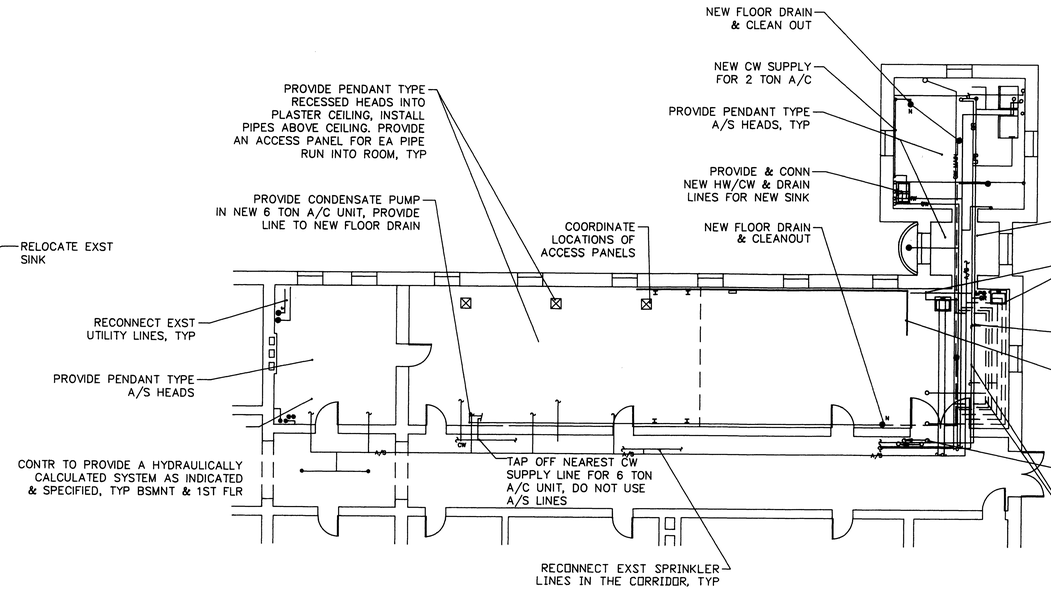

3 BASEMENT FLOOR PIPING
2-P-1 1/8"=1'-0"

GENERAL NOTES

1. REMOVE ALL ORIGINALLY INSTALLED AUTOMATIC SPRINKLER SYSTEMS IN THE AREAS SHOWN AND AFFECTED BY NEW CONSTRUCTIO

2. RUN ALL NEW SPRINKLER PIPING EXPOSED BELOW PLASTER CEILINGS ON THE BASEMENT BATHROOM ONLY. RUN BETWEEN JOISTS ABOVE NEW GYP BD CEILING IN BASEMENT, EXCEPT ROOM B06

3. HYDRUALICALLY CALCULATED SYSTEM (DRY) PIPE SHALL PROVIDE A MINIMUM DENSITY OF .16 GPM PER SQ FT. PER SPRINKLER BASED ON ALL SPRINKLERS IN THE MOSE REMOTE 1,500 SQ FT AREA OPERATING - TYPICAL FOR ORDINARY HAZARD GROUP I

4. CEILING CONSTRUCTION THROUGHOUT BUILDING: METAL LATH & PLASTER BELOW 2" X 12" WOOD FLOOR, LATH & PLASTER ON MASONRY WALLS. PROVIDE ACCESS DOORS FOR VALVES, ETC AND AS DIRECTED.

5. SLOPE DRY SYSTEM PIPE IN AREAS SUBJECT TO FREEZING 1/2" PER 10FT. LENGTH FOR BRANCH LINES. 1/4" PER 10 FT LENGTH FOR CROSS & FEED MAINS.

6. PATCH PLASTER WHERE OLD SPRINKLER LINES ARE REMOVED

7. NEW FIRE ALARM CODE FOR SPRINKLERS TO MATCH EXISTING.

AVAILABLE WATER SUPPLY: 70 PSI RESIDUAL

NOTE: ALL PIPING SHOWN HERE FOR CLARITY

EXST SINK RELOCATED REROUTE PLUMBING LINES AS REQ'D & RISERS TO UPPER FLOORS

NEW A/S HEADS, TYP RECESSED INTO PLASTER CLG, PROVIDE ACCESS PNL

1/4"ø STAINLESS STEEL PIPES, (1) FROM THE CONTROL RM TO THE BRAKE PANEL AND (2) FROM THE CONTROL ROOM TO THE NORTH SIDE OF THE REACTION MASS

RELOCATE VALVES, TRAPS, ETC. AS REQUIRED TO INSTALL NEW BIPARTING DOORS, TYP

DO NO RELOCATE UTILITY LINES IN THIS AREA. LINES SHALL REMAIN IN EXST LOCATIONS. △1

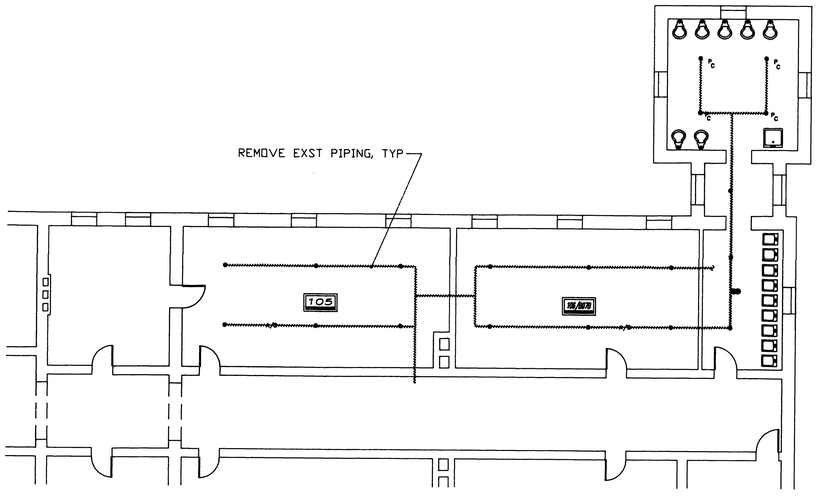

2 FIRST FLOOR PIPING DEMO
2-P-1 1/8"=1'-0"

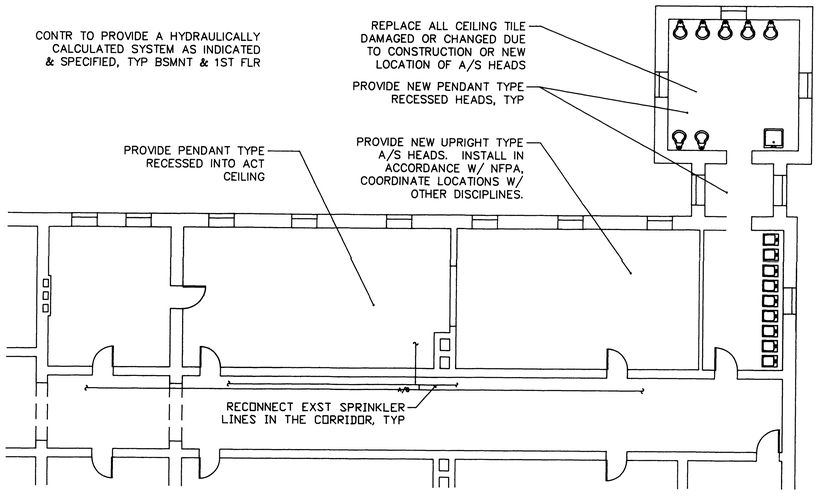

4 FIRST FLOOR PIPING
2-P-1 1/8"=1'-0"

ABBREVIATIONS & SYMBOLS

U	UPRIGHT TYPE
P	PENDANT TYPE, NEW, C INDICATES RECESSED INTO PLST OR AC CEILING
N	NEW
R	RELOCATE & RECONNECT AS REQUIRED
LPS	LOW PRESSURE STEAM ~ 6 PSI
CR	CONDENSATE RETURN
A/S	AUTOMATIC SPRINKLER SYSTEM
CW	COLD WATER
HW	HOT WATER
●	FLOOR DRAIN
	REMOVE EXST LINES, RELOCATE, & RECONNECT NEW LINES TO EXST EQUIPMENT & FIXTURES IN BSMNT & FIRST, ETC. AS REQ'D. DEMO EXST LINES, FIXTURES, & EQUIPMENT INDICATED TO BE REMOVED
••	RISER LINES
	PIPING LINES BELOW THE SLAB

△1 EXST UTILITY LINES IN NORTH BASEMENT BATHROOM SHALL REMAIN & NOT BE RELOCATED — 4/9/90

Revisions | Date

SCANNED
AUG 27 1998

Drawing Title: PIPING DEMO & NEW FLOOR PLANS	Project Title: HORIZONTAL IMPACT SLED BUILDING 2		Date: 3/2/90
Approved Division Chief	Building Number: 2	Checked: TAH	Drawn: JWD
Approved Service Director: THOMAS A. HEYDEL	Location: MILWAUKEE, WISCONSIN		Drawing No.: 2-P-1

Veterans Administration

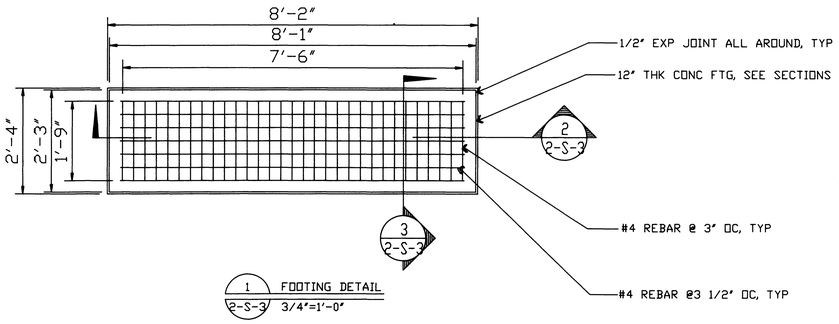

1 FOOTING DETAIL
2-S-3 3/4"=1'-0"

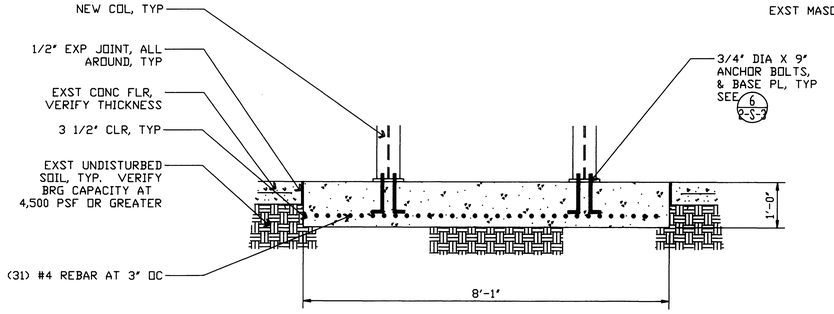

2 FOOTING SECTION
2-S-3 3/4"=1'-0"

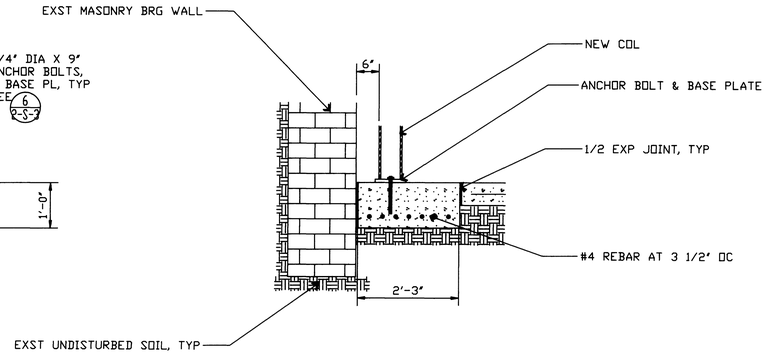

3 FOOTING SECTION
2-S-3 3/4"=1'-0"

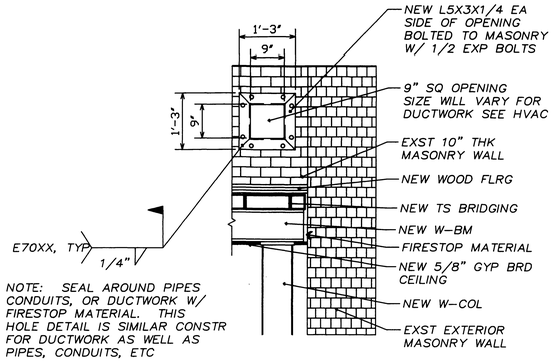

4 ACCESS HOLE DETAIL
2-S-3 3/4"=1'-0"

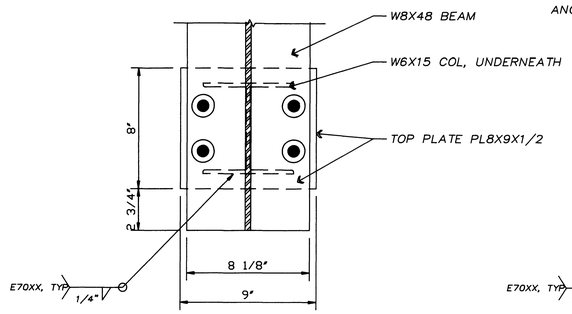

5 TOP PLATE DETAIL
2-S-3 3"=1'-0"

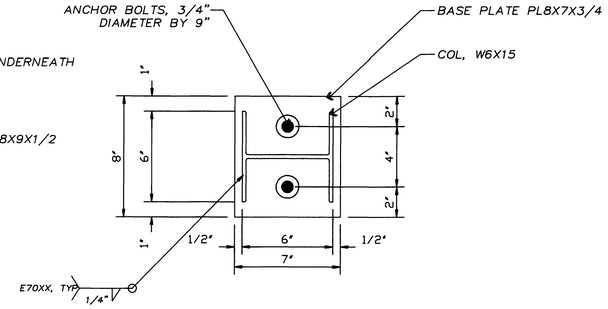

6 BASE PLATE DETAIL
2-S-3 3"=1'-0"

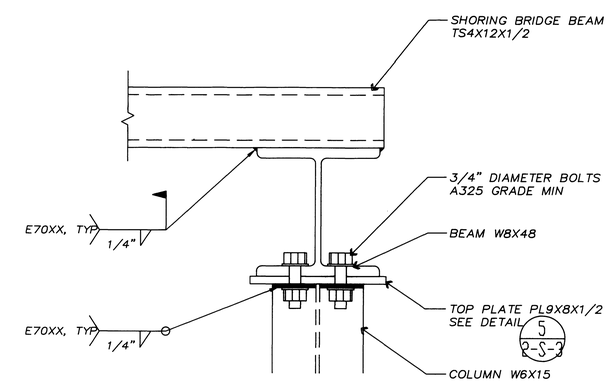

7 BEAM TO BRIDGING DETAIL
2-S-3 3"=1'-0"

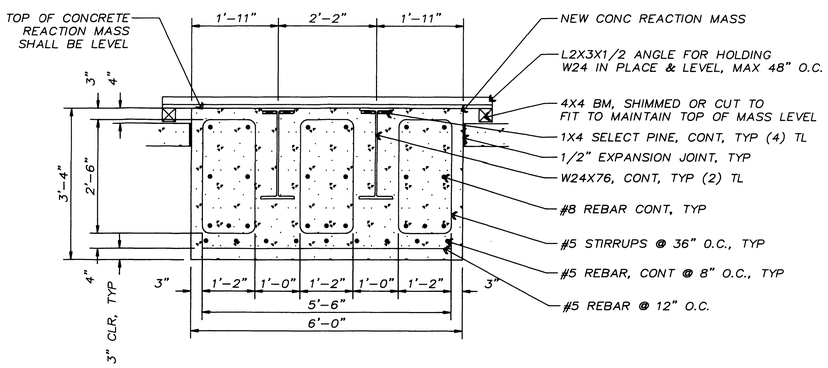

8 CONCRETE REACTION MASS SECTION
2-S-3 3/4"=1'-0"

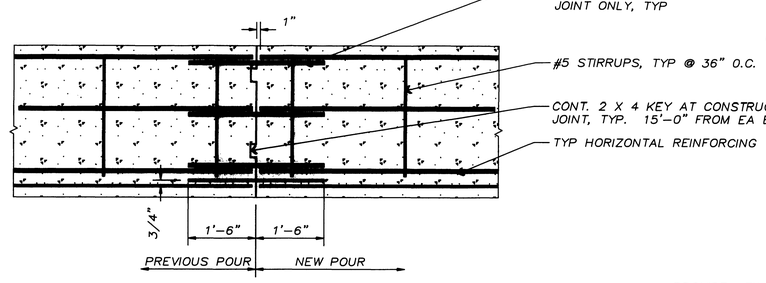

9 REACTION MASS CONSTRUCTION JOINT
2-S-3 3/4"=1'-0"

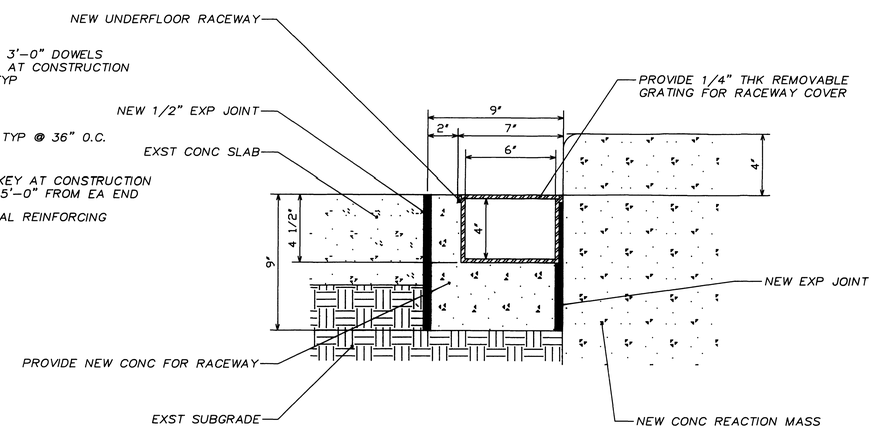

10 UNDERFLOOR RACEWAY
2-S-3 3"=1'-0"

Revisions	Date

SCANNED
AUG 26 1998

Drawing Title: STRUCTURAL SECTIONS AND DETAILS	Project Title: HORIZONTAL IMPACT SLED BUILDING 2		Date: 2/14/90
Approved Division Chief	Building Number: 2	Checked: TAH	Project No.
Approved Service Director: THOMAS A. HOWELL	Location: MILWAUKEE, WISCONSIN	Drawn: JWD	Drawing No. 2-S-3

Veterans Administration

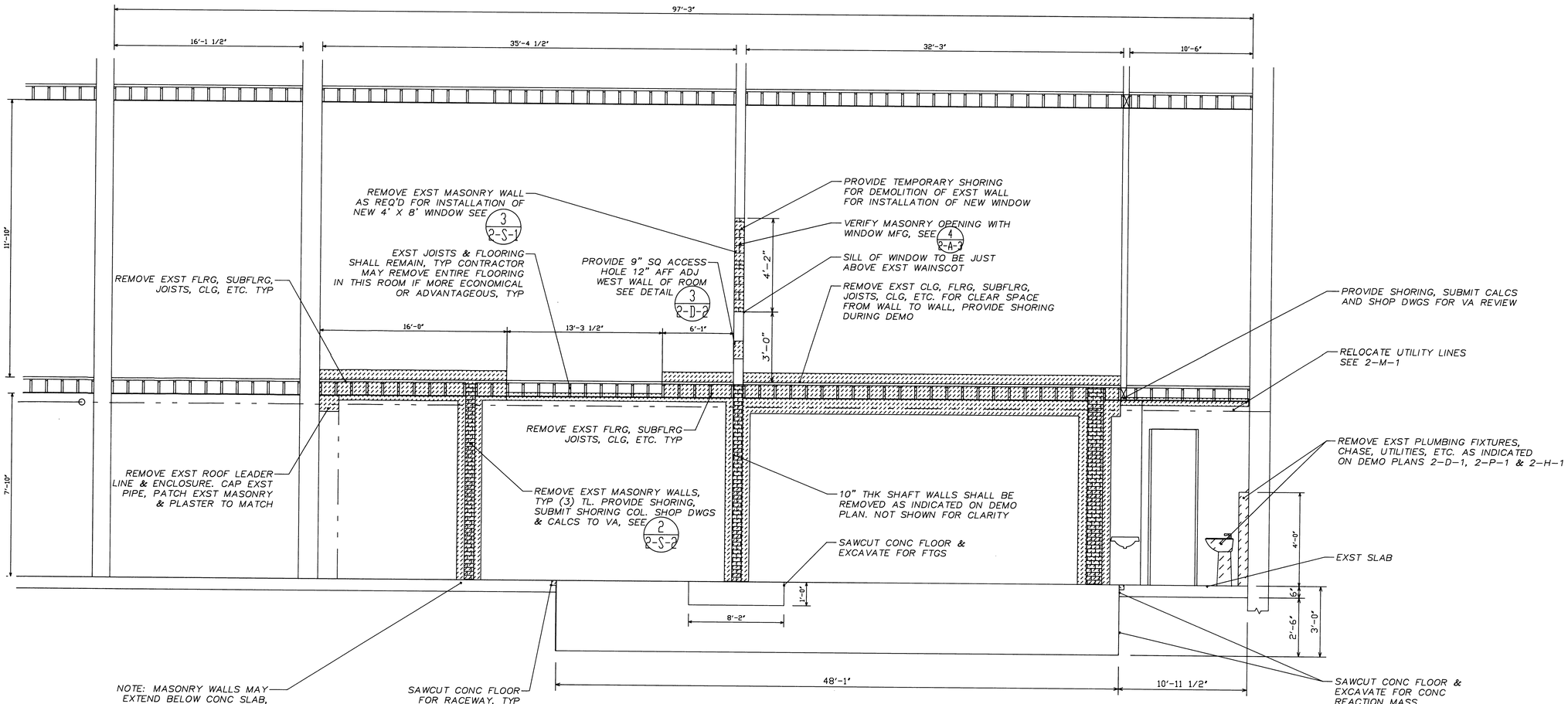

1 DEMOLITION SECTION
2-D-2 H: 1/4"=1'-0" V: 1/2"=1'-0"

ABBREVIATIONS & SYMBOLS

- EXISTING MASONRY WALL SHALL REMAIN
- DEMOLITION OF EXISTING MASONRY, CONCRETE, FLOORING, CEILING, ETC
- CONCRETE
- EARTH OR SUBGRADE

ACM	ASBESTOS CONTAINING MATERIAL
TYP	TYPICAL
EA	EACH
EXST	EXISTING
BSMNT	BASEMENT
CLG	CEILING
REQ'D	REQUIRED
DEMO	DEMOLITION
TL	TOTAL
DWGS	DRAWINGS
CALCS	CALCULATIONS
VA	DEPARTMENT OF VETERANS AFFAIRS

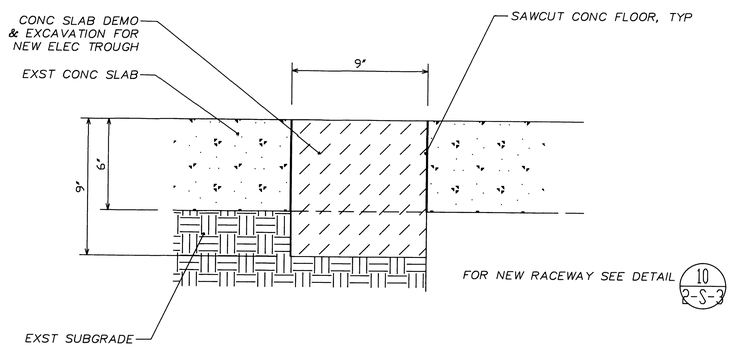

2 RACEWAY DEMOLITION
2-D-2 3"=1'-0"

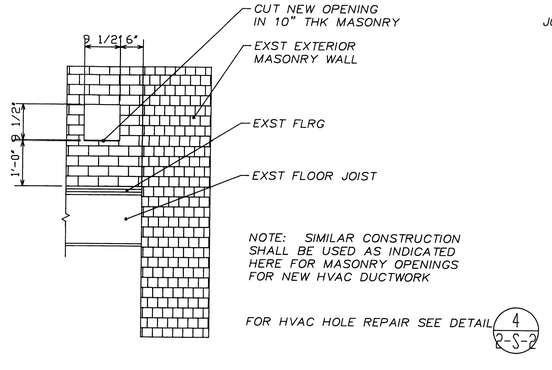

3 ACCESS HOLE DEMO
2-D-2 3/4"=1'-0"

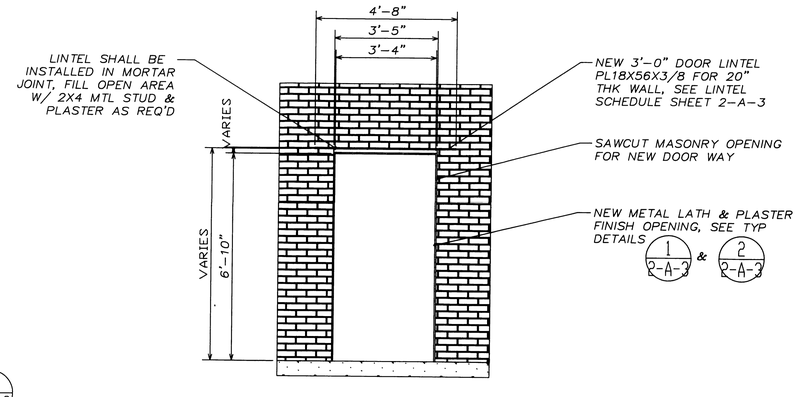

4 DOOR OPENING SECTION
2-D-2 1/2"=1'-0"

Revisions	Date

SCANNED
AUG 2 6 1998

Drawing Title: STRUCTURAL DEMOLITION SECTIONS AND DETAILS	Project Title: HORIZONTAL IMPACT SLED BUILDING 2		Date: 2-13-90
			Project No.
Approved Division Chief	Building Number: 2	Checked: TAH / Drawn: JWD	Drawing No. 2-D-2
Approved Service Director: THOMAS A. HEYDEL	Location: MILWAUKEE, WISCONSIN		Dwg. 3 OF 17

Veterans Administration

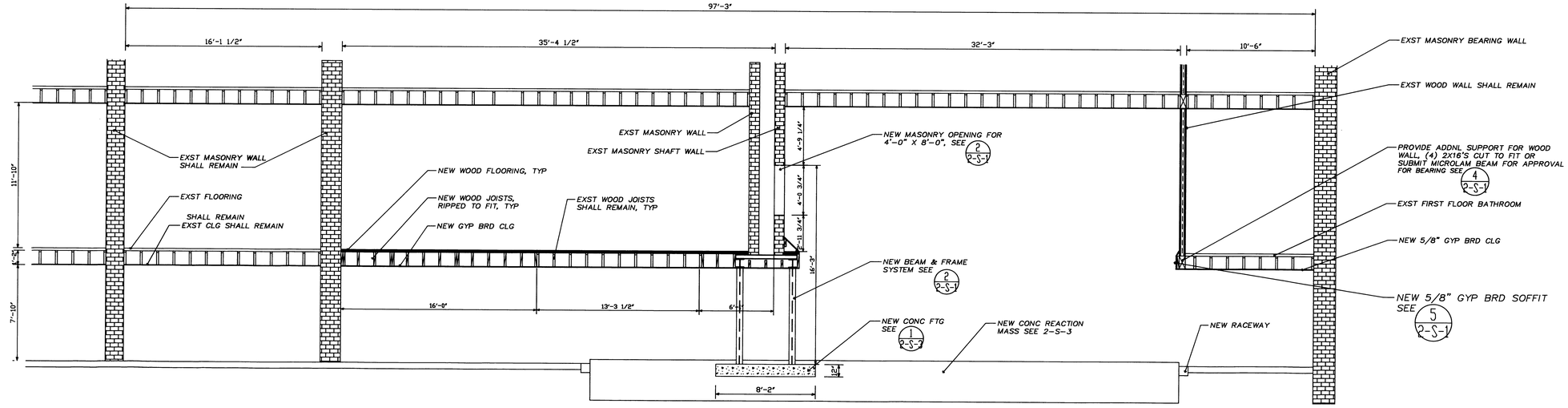

1 SECTION STRUCTURAL
2-S-1 1/4"=1'-0"

ABBREVIATIONS & SYMBOLS

- EXST 2" X 13.5" JOISTS W/ 1/2" FLOORING NAILER
- NEW 2X16 JOIST RIPPED TO FIT
- NEW WOOD FLOORING, CD PLYWOOD W/ EXTERIOR GLUE SUBFLOORING & CC PLY UNDERLAYMENT W/ EXTERIOR GLUE MIN PLY 5/8" THK, STAGGER JOINTS & ALTERNATE PLY RUNS
- NEW 5/8" THK GYP BRD CEILING

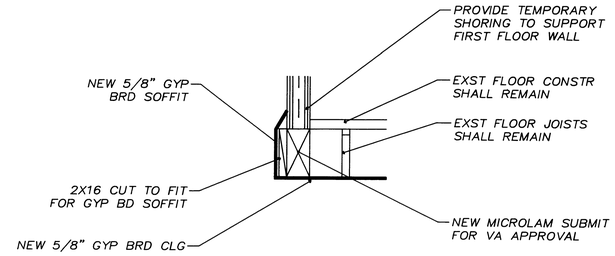

5 SOFFIT DETAIL
2-S-1 3/4"=1'-0"

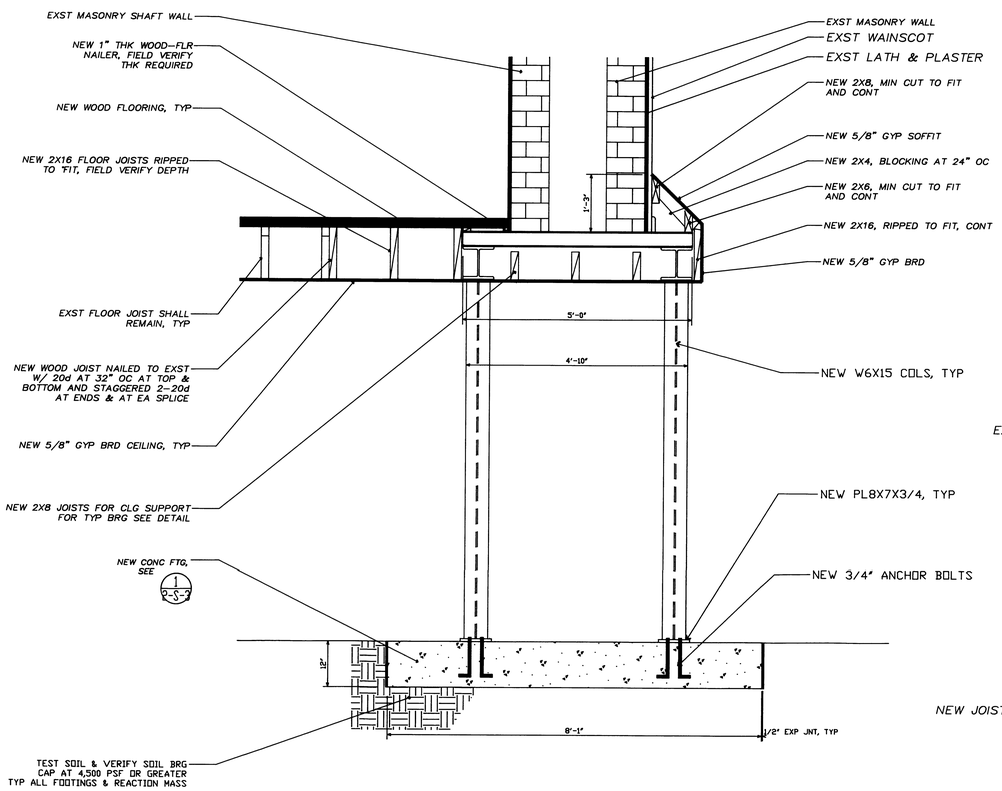

2 SECTION
2-S-1 3/4"=1'-0"

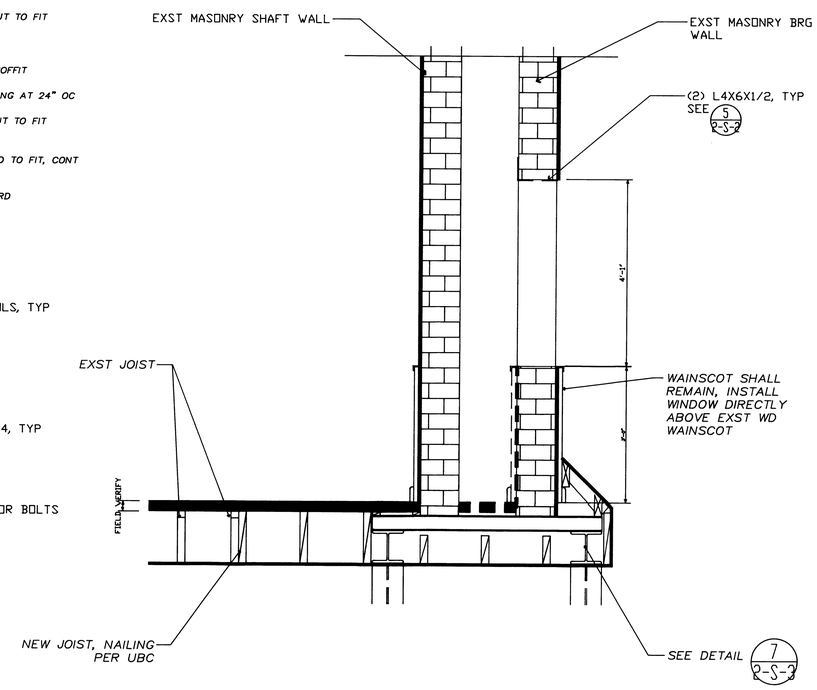

3 SECTION
2-S-1 3/4"=1'-0"

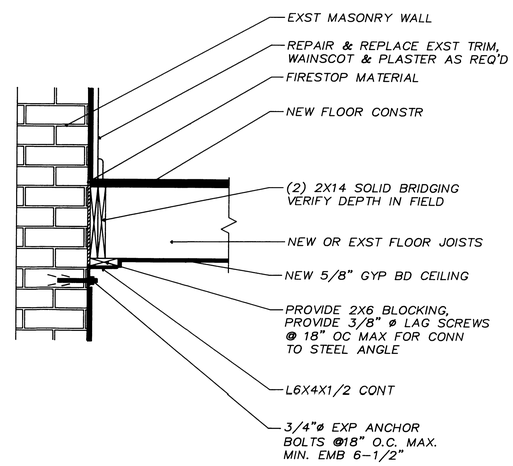

4 CONNECTION OF JOISTS TO WALL
2-S-1 NO SCALE

Revisions	Date

SCANNED
AUG 26 1998

Drawing Title: STRUCTURAL SECTIONS AND DETAILS	Project Title: HORIZONTAL IMPACT SLED BUILDING 2		Date: 2/14/90
			Project No.
Approved: Division Chief	Building Number: 2	Checked: TAH	Drawn: JWD
Approved: Service Director: THOMAS A. HEYDEL	Location: MILWAUKEE, WISCONSIN		Drawing No. 2-S-1 Dwg. 6 Of

Veterans Administration

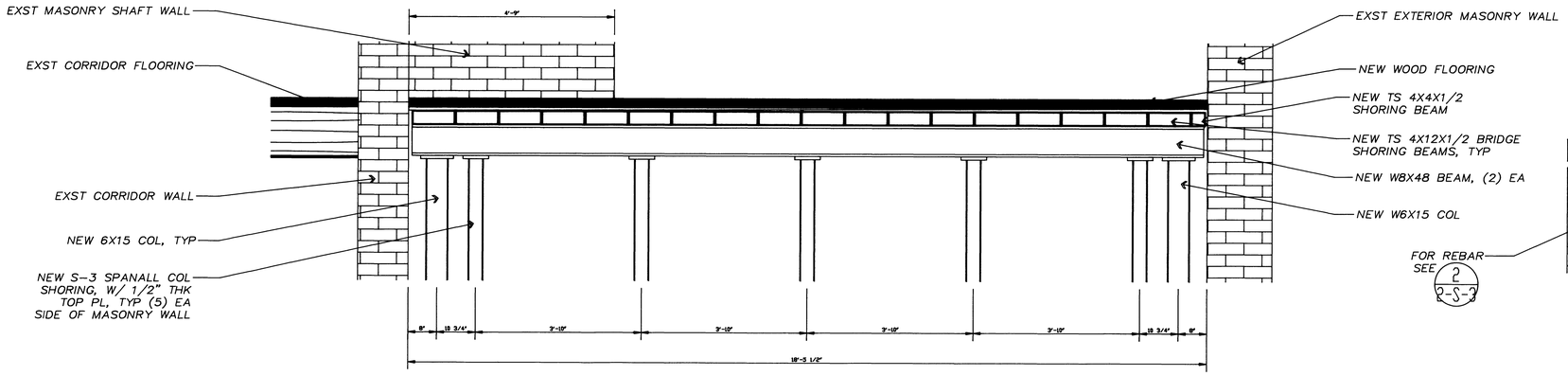

1 / 2-S-2 TYPICAL BEAM SHORING SECTION
3/4"=1'-0"

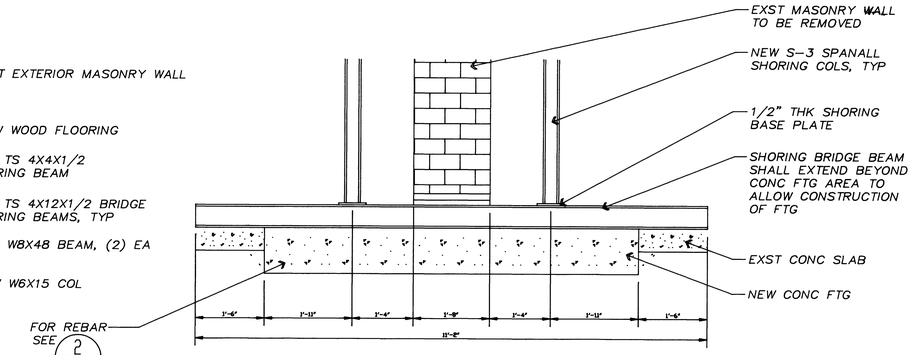

2 / 2-S-2 SHORING COL SUPPORT AT ADJ WALL
3/4"=1'-0"

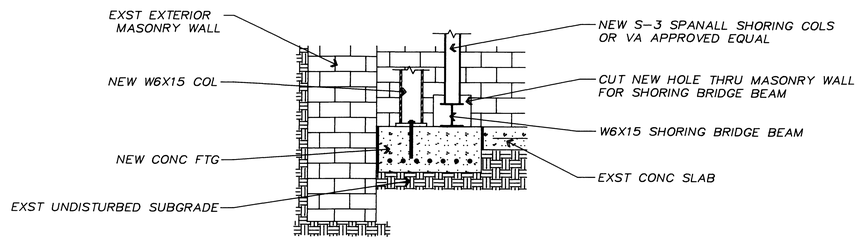

3 / 2-S-2 SHORING COL SUPPORT AT ADJ WALL
3/4"=1'-0"

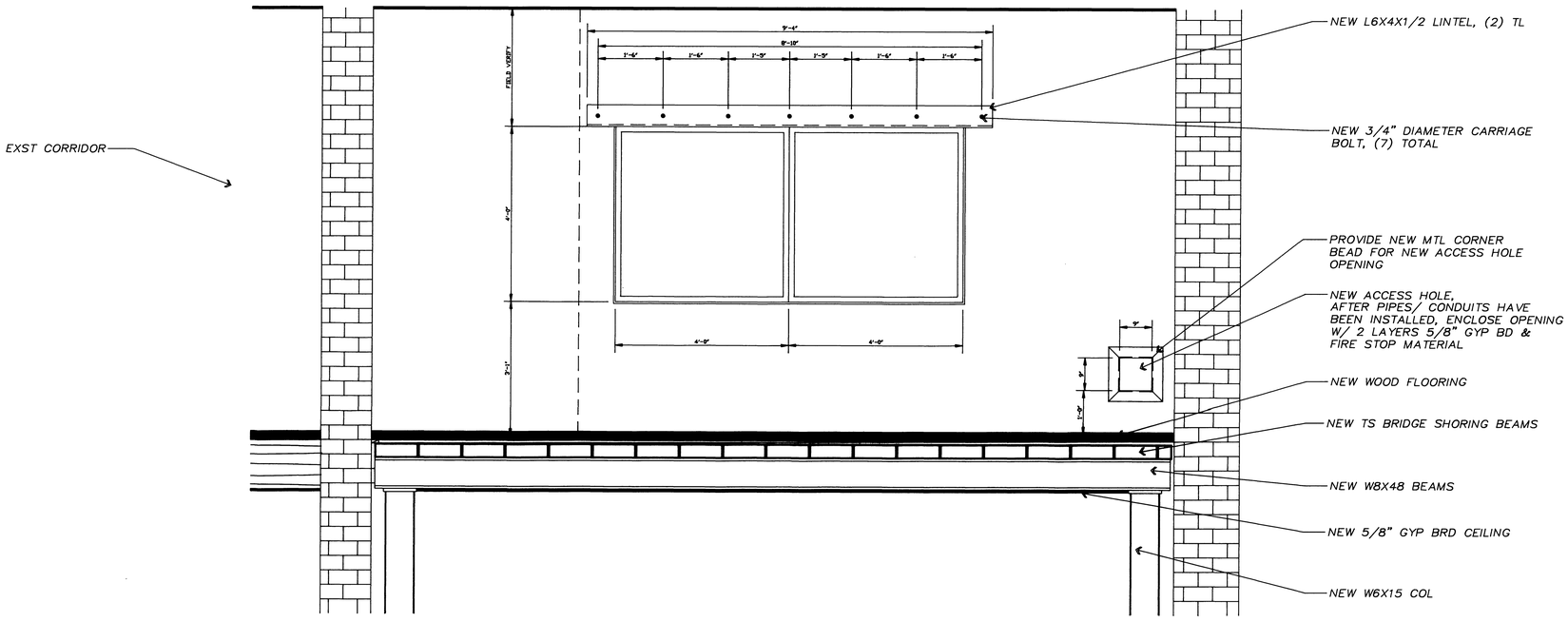

4 / 2-S-2 1st FLOOR WINDOW LINTEL
3/4"=1'-0"

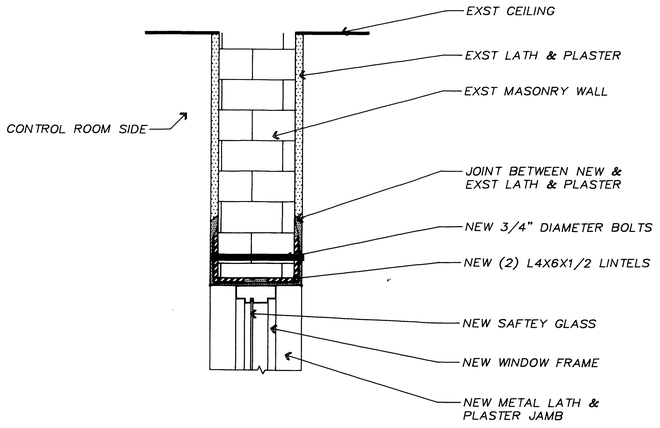

5 / 2-S-2 WINDOW LINTEL SECTION
1-1/2"=1'-0"

Revisions	Date

SCANNED
AUG 26 1998

Drawing Title: STRUCTURAL SECTIONS AND SHORING DETAILS	Project Title: HORIZONTAL IMPACT SLED BUILDING 2		Date: 2/14/90
Approved: Division Chief	Building Number: 2	Checked: TAH / Drawn: JWD	Project No.
Approved: Service Director: THOMAS A. HEYDEL	Location: MILWAUKEE, WISCONSIN		Drawing No. 2-S-2

Veterans Administration

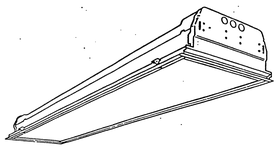

FLUORESCENT LIGHT FIXTURE

1X4 RECESSED, 2 LAMP - 40W
LITHONIA SP240 OR EQUIVALENT

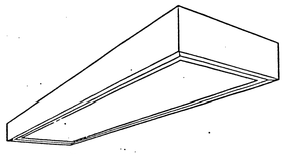

FLUORESCENT LIGHT FIXTURE

1X4 SURFACED MOUNTED, 2 LAMP - 40W
LITHONIA SM240 OR EQUIVALENT

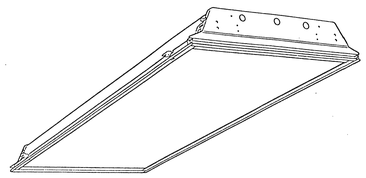

FLUORESCENT LIGHT FIXTURE

2X4 RECESSED, 3 LAMP - 40W
LITHONIA 2SP340 OR EQUIVALENT

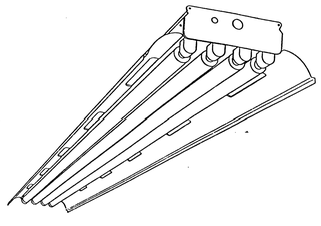

FLUORESCENT LIGHT FIXTURE

16"X48" SUSPENDED, 4 LAMP - 40W
LITHONIA EJ448 OR EQUIVALENT △1

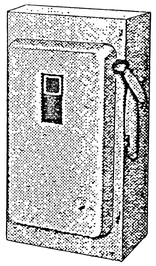

NON-FUSIBLE SAFETY SWITCH

30A, 2 POLE, 240V VISIBLE BLADE,
HEAVY DUTY NEMA 1 ENCLOSED

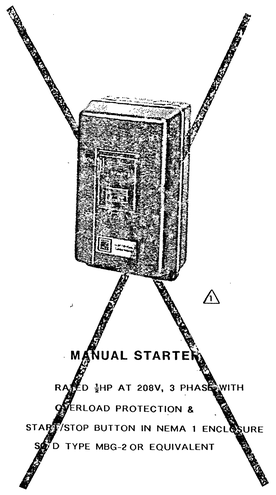

MANUAL STARTER

RATED ½HP AT 208V, 3 PHASE WITH
OVERLOAD PROTECTION &
START/STOP BUTTON IN NEMA 1 ENCLOSURE
SQ D TYPE MBG-2 OR EQUIVALENT

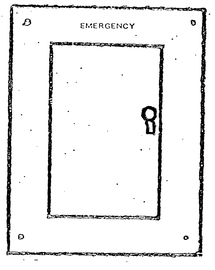

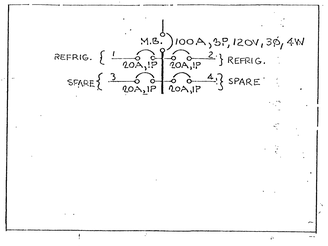

EMERGENCY CIRCUIT BREAKER PANELBOARD EUL-1

PAINT 'EMERGENCY' IN 1-IN RED BLOCK LETTERS ON OUTSIDE OF
CABINET DOOR SQD TYPE NQOD WITH INTERIOR NQOD412M100

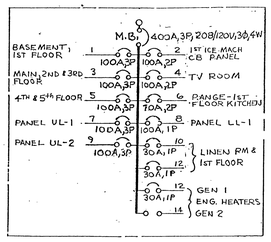

PANELBOARD MDP

SQ D TYPE HCN I-LINE WITH
HCN2374-4M INTERIOR OR
EQUIVALENT

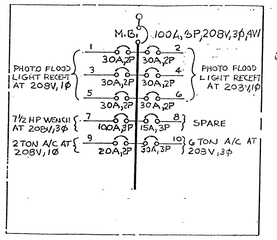

PANELBOARD UL-2

SQ D TYPE HCN I-LINE WITH
HCN1865-2M INTERIOR OR
EQUIVALENT

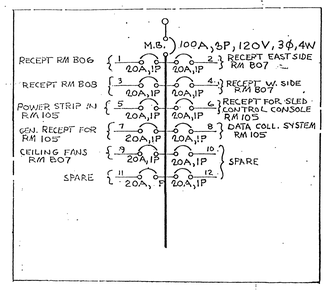

PANELBOARD UL-1

SQ D TYPE NQOD WITH INTERIOR
NQOD424M100CU OR EQUIVALENT

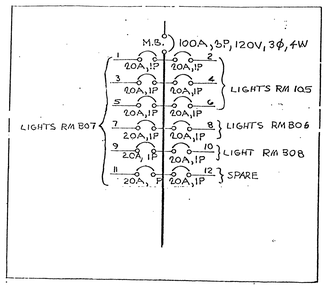

PANELBOARD LL-1

SQ D TYPE NQOD WITH
3 HID RATED BREAKERS FOR
METAL HALIDE LIGHTS AND INTERIOR
NQOD424M100CU OR EQUIVALENT

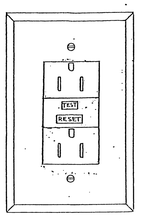

PHOTO FLOOD LIGHT RECEPTACLE

HUBBELL CAT NO. 3330-G RATED 30A,
250V AC/DC 2 POLE 3W

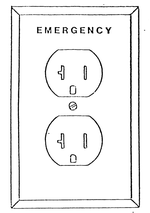

GFI DUPLEX RECEPTACLE

20A 120V 1PHASE

EMERGENCY DUPLEX RECEPTACLE

RED BODIED WITH STAINLESS WALL PLATE
HAVING 'EMERGENCY' IN ¼IN RED LETTERS
FOR 20A 120V 1 PHASE

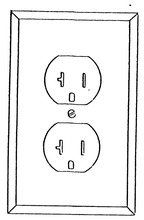

GENERAL DUPLEX RECEPTACLE

20A 120V 1PHASE

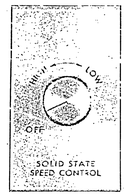

FAN SPEED CONTROL

DAYTON MODEL 4C928, 3A, 120V

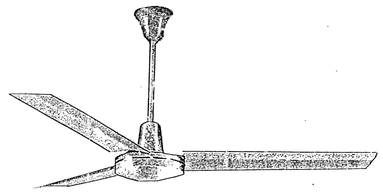

CEILING FAN

DAYTON MODEL 4C853
RATED 0.53A WITH THERMAL
OVERLOAD PROTECTION

GENERAL NOTES

1. ALL FLUORESCENT LIGHT FIXTURES TO HAVE ENERGY EFFICIENT RAPID START BALLASTS AT 120V.

2. ALL FLUORESCENT LIGHT FIXTURES TO BE BAKED WHITE ENAMEL.

3. ALL FLUORESCENT LIGHT FIXTURE LENS TO BE ACRYLIC PLASTIC 1/8" THICK EXCEPT FOR PARABOLIC.

4. ALL FLUORESCENT LIGHT FIXTURES TO BE ABLE TO DISSIPATE HEAT THRU CAVITY SURFACE RADIATOR, OR OTHER STATIC MEANS.

5. ALL PANELBOARDS SHALL HAVE SURFACE MOUNT NEMA 1 ENCLOSURES FOR 208V/120V 3 PHASE, 4 WIRE WITH MAIN BREAKER AND CIRCUIT BREAKER RATINGS AS SHOWN. ALSO, PAINT PANEL DESIGNATION IN 1" BLOCK LETTERS ON OUTSIDE OF CABINET DOORS.

6. MOLDED CASE THERMAL MAGNETIC BREAKER RATINGS AS SHOWN WITH INTERRUPTING RATING OF 22,000 AMPS SYMETRICAL.

7. FOR EMERGENCY PANEL "2X" PLACE 40A 1-POLE CIRCUIT BREAKER IN SPACE 27 TO FEED EMERGENCY PANEL EUL-1.

Revisions	Date
△1 Removed metal halide light fixture; added fluorescent fixture Removed manual starter	4-9-90

SCANNED AUG 27 1996

Drawing Title: ELECTRICAL POWER, LIGHTING & FIRE ALARM PLANS	Project Title: HORIZONTAL IMPACT SLED BUILDING - 2		Date: 2-15-90
Approved: Division Chief	Building Number: 2	Checked: TAH / Drawn: FWB	Project No.
Approved: Service Director: THOMAS A. HEYMEL	Location: MILWAUKEE, WISCONSIN		DRAWING NO. 2-E-5 Dwg. Of

Veterans Administration

VA FORM 08-6231, FEB. 1983

U.S. GOVERNMENT PRINTING OFFICE: 1982-419-085

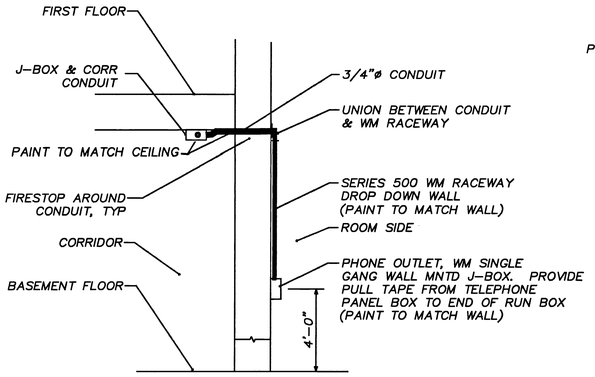

1 / 1 BASEMENT FLOOR PHONE OUTLET
1/2"=1'-0"

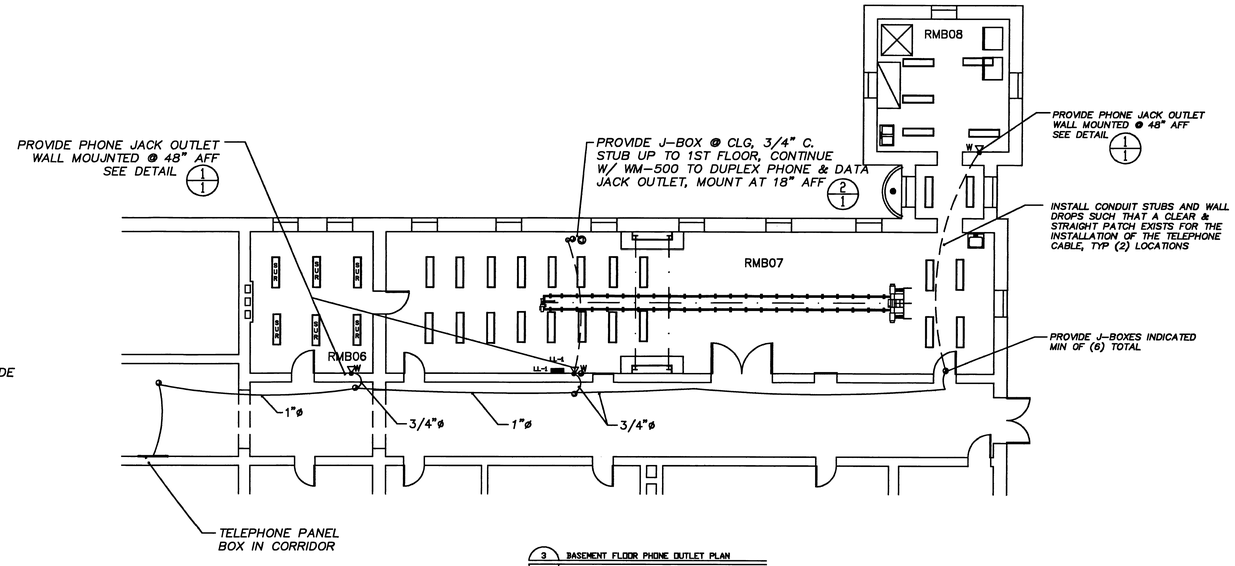

3 / 1 BASEMENT FLOOR PHONE OUTLET PLAN
1/8"=1'-0"

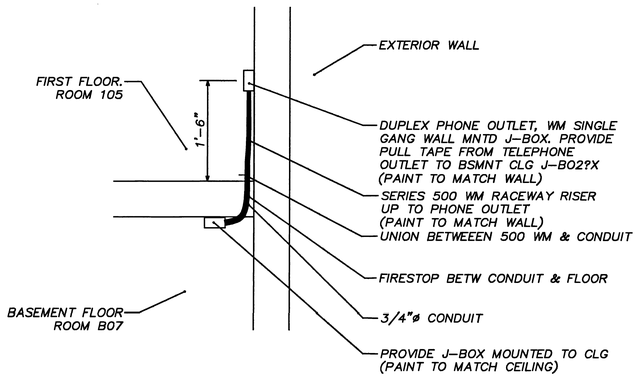

2 / 1 FIRST FLOOR PHONE OUTLET
1/2"=1'-0"

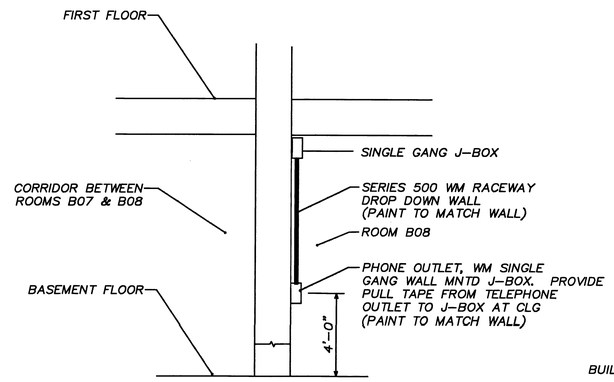

4 / 1 BASEMENT FLOOR PHONE OUTLET
1/2"=1'-0"

BUILDING 2 HORIZONTAL IMPACT SLED PHONE SYSTEM

Revisions	Date

SCANNED
AUG 27 1998

Drawing Title: PHONE SYSTEM CONDUIT INSTALLATION	Project Title: HORIZONTAL IMPACT SLED BUILDING 2		Date: 8/22/90
			Project No.: 98043
Approved Division Chief: 1/8"=1'-0"	Building Number: 2	Checked: TAH	Drawn: Jwd
Approved Service Director: THOMAS A. HEYDEL	Location: MILWAUKEE, WISCONSIN		Drawing No.: 2-E-6 Dwg. 19 of 19

Veterans Administration

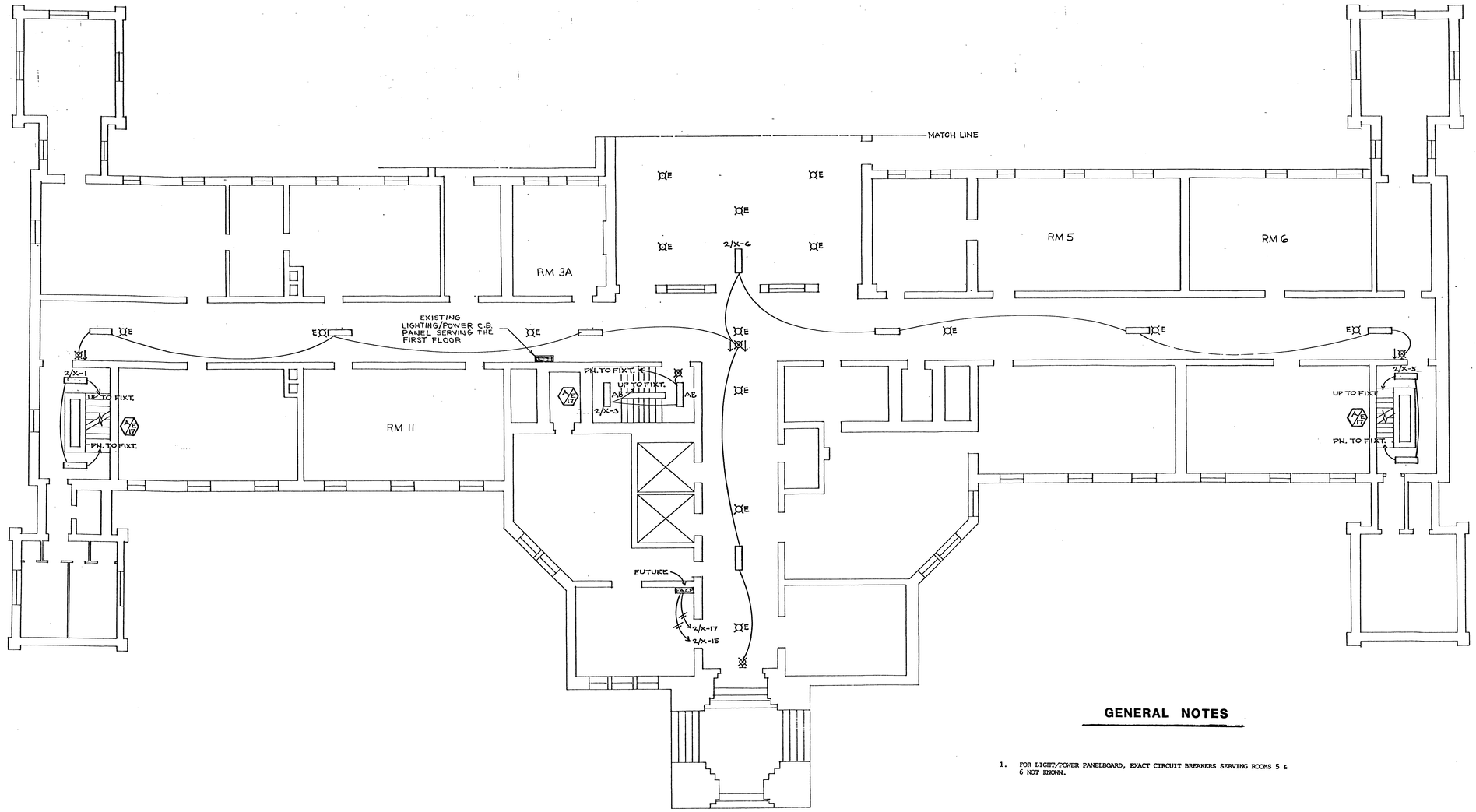

N

FIRST FLOOR PLAN - EAST - PWR & LTG

SCALE 1/8" = 1'-0"

GENERAL NOTES

1. FOR LIGHT/POWER PANELBOARD, EXACT CIRCUIT BREAKERS SERVING ROOMS 5 & 6 NOT KNOWN.

Revisions	Date

SCANNED
AUG 27 1998

Drawing Title: ELECTRICAL POWER, LIGHTING & FIRE ALARM PLAN		Project Title: HORIZONTAL IMPACT SLED BUILDING - 2	Date: 2-12-90
Approved: Division Chief	Drawn: FWB	Building Number: 2	Project No.
Approved: Service Director THOMAS A. HEYDEL	Checked: TAH	Location: MILWAUKEE, WISCONSIN	DRAWING No. 2-E-4 Dwg. Of

Veterans Administration

VA FORM 08-6231, OCT 1978

U. S. GOVERNMENT PRINTING OFFICE : 1978 O - 276-000

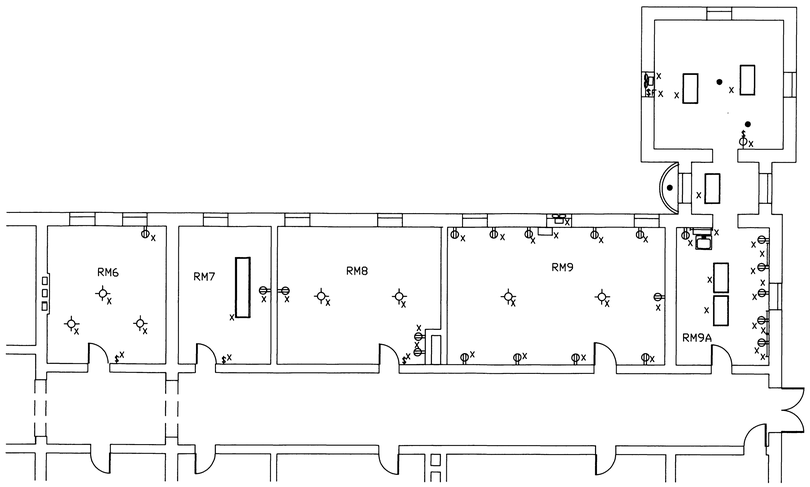

1 BASEMENT FLOOR PLAN
2-E-1 1/8"=1'-0"

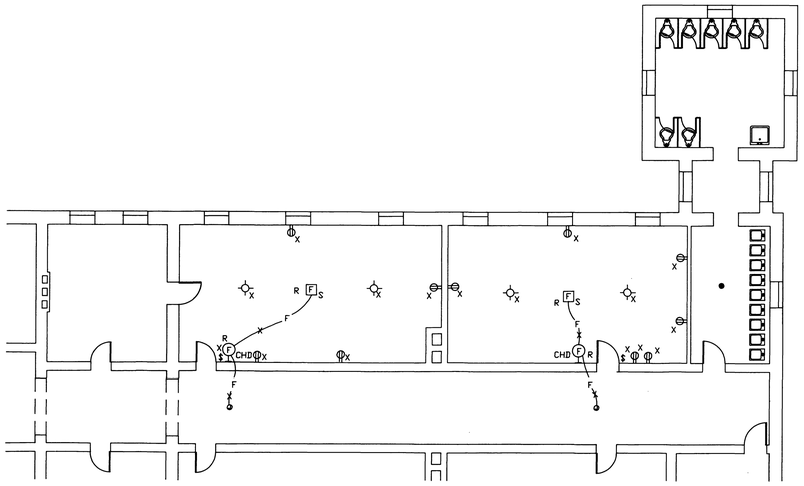

2 FIRST FLOOR PLAN
2-E-1 1/8"=1'-0"

GENERAL NOTES

1. REMOVE ALL EXISTING ELECTRICAL EQUIPMENT AS INDICATED UNLESS OTHERWISE NOTED TO REMAIN, INCLUDING LIGHTING FIXRURES, SWITCHES, RECEPTACLES, EXPOSED CONDUIT, SURFACE AND FLUSH DEVICE BOXES, DEVICE PLATES, ETC. REMOVE ALL WIRING FROM EXISTING CONDUITS, CUT BACK, CAP AND ABANDON ALL CONCEDALED CONDUITS AS REQUIRED.
2. MAINTAIN AND RESTORE, IF INTERRRUPED, ALL CONDUITS AND FEEDERS PASSING THRU RENOVATED AREAS AND SERVICING UNDISTURBED AREAS.
3. EXISTING ELECTRICAL WORK TO REMAIN IN THIS AREA; RESTORE ALL CIRCUITS INTERRUPTED BY NEW WORK. EVENTHOUGH WORK IS BEING DONE ON THE FIRE ALARM SYSTEM, IT MUST BE OPERATIONAL DURING NON-CONTRACTURAL HOURS. THEREFORE, TEMPORARY WIRING WILL BE REQUIRED. SEE DWG'S F-7 & F-9 FOR BLDG 2.
4. PARTIAL BRANCH CIRCUIT WIRING DENOTING EXISTING CONTROL OR SWITCHING ON THE DRAWINGS IS SHOWN FOR REFERENCE/ CLARIFICATION ONLY AND IS NOT TO BE CONSTRUED TO IMPLY COMPLETE CIRCUIT WIRING. THE LOCATION OF THE INTER-SECTION OF CONTROL DEVICE AND EQUIPMENT CONTROLLED IS DIAGRAMATIC ONLY.
5. SEE DWG 2-E-3 AND DWG 2-E-4 SHOWING THE CIRCUIT BREAKER PANELBOARDS SERVICING THESE AREAS.

SYMBOLS & ABBREVATIONS

EXISTING 2X4 SURFACE MOUNTED FLUORESCENT CEILING LIGHT FIXTURE

EXISTING INCANDESCENT LIGHT FIXTURE

EXISTING 2X4 SUSPENDED FLUORESCENT CEILING LIGHT FIXTURE

EXISTING FLUORESCENT WALL FIXTURE

F CHD EXIXTING AUDIBLE VISUAL FIRE ALARM

R F S EXISTING SMOKE DETECTOR TO BE REUSED

$ EXISTING LIGHT SWITCH

EXISTING DUPLEX RECEPTACLE

EXISTING COMBINATION SWITCH & DUPLEX RECEPT

EXISTING FUSE BOX FOR FAN

$F EXISTING FAN SWITCH

EXISTING FAN

"R" INDICATES REUSE

"X" INDICATES TO BE REMOVED

N

Revisions	Date

SCANNED
AUG 27 1998

Drawing Title: ELECTRICAL POWER, LIGHTING & FIRE ALARM DEMO PLANS	Project Title: HORIZONTAL IMPACT SLED BUILDING 2		Date: 2-9-90
			Project No.
Approved Division Chief	Building Number: 2	Checked: TAH	Drawn: FWB
Approved Service Director: THAMAS A. HENDEL	Location: MILWAUKEE, WISCONSIN		Drawing No. 2-E-1 Dwg. 9 OF 17

Veterans Administration

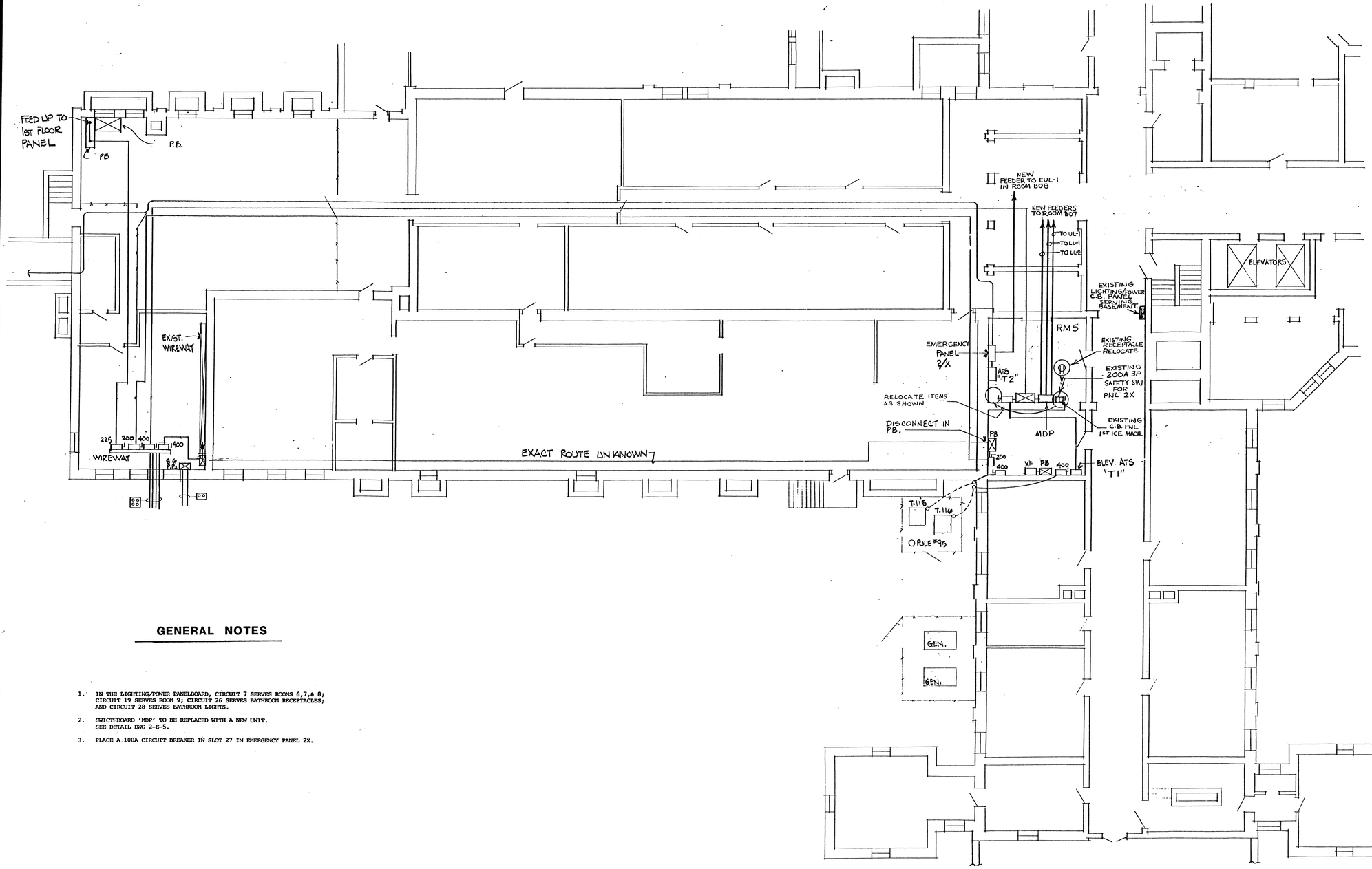

PARTIAL BASEMENT FLOOR PLAN - BUILDING #2

SCALE 1/8"=1'-0"

GENERAL NOTES

1. IN THE LIGHTING/POWER PANELBOARD, CIRCUIT 7 SERVES ROOMS 6,7,& 8; CIRCUIT 19 SERVES ROOM 9; CIRCUIT 26 SERVES BATHROOM RECEPTACLES; AND CIRCUIT 28 SERVES BATHROOM LIGHTS.
2. SWITCHBOARD 'MDP' TO BE REPLACED WITH A NEW UNIT. SEE DETAIL DWG 2-E-5.
3. PLACE A 100A CIRCUIT BREAKER IN SLOT 27 IN EMERGENCY PANEL 2X.

Revisions	Date

SCANNED
AUG 27 1998

Drawing Title: ELECTRICAL POWER, LIGHTING & FIRE ALARM PLAN	Project Title: HORIZONTAL IMPACT SLED BUILDING - 2		Date: 2-12-90
			Project No. 695-
Approved: Division Chief	Building Number: 2	Checked: TAH / Drawn: FWB	DRAWING NO. 2-E-3
Approved: Service Director: THOMAS A. HEYDEL	Location: C.J. ZABLOCKI VAMC MILW., WI.		Dwg. Of

Veterans Administration

VA FORM 08-6231, FEB. 1983

GENERAL NOTES

1. INTERFACE ELECTRO-MECHANICAL TYPE DOOR HOLDERS WITH SMOKE DETECTORS OUTSIDE ROOM B07 WITH THE SMOKE DETECTORS IN ROOMS B06 AND B07/08 SUCH THAT ANYONE DETECTOR WILL OPERATE THE DOOR HOLDERS AT ROOMS B06 AND B07.
2. SINGLE 208V OUTLETS ARE ON 2'-0 CENTERS MTD 18" AFF AND ARE HUBBLE TYPE 3330-G.
3. GENERAL OUTLETS ARE MTD 18" AFF UNLESS OTHERWISE NOTED. OUTLETS ON THE EAST AND WEST WALLS IN ROOM B07 ARE MTD ON 10'-0 CENTERS.
4. PANEL 'EUL-1' IS ON EMERGENCY POWER.
5. SURFACE MOUNT ELECTRICAL BOXES AND RACEWAYS EXCEPT FOR RECESSED LIGHTING AND FLOOR WIREWAYS. USE WIREMOLD IN ROOM 105.

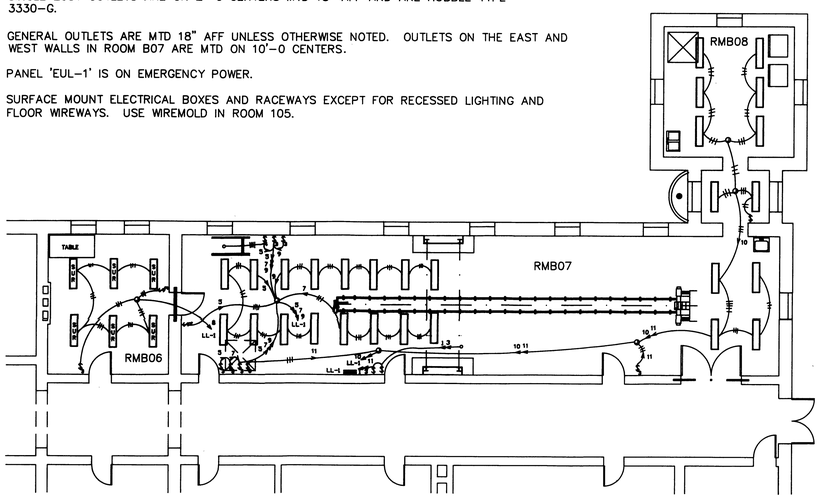

1 BASEMENT LIGHTING PLAN
2-E-2 1/8"=1'-0"

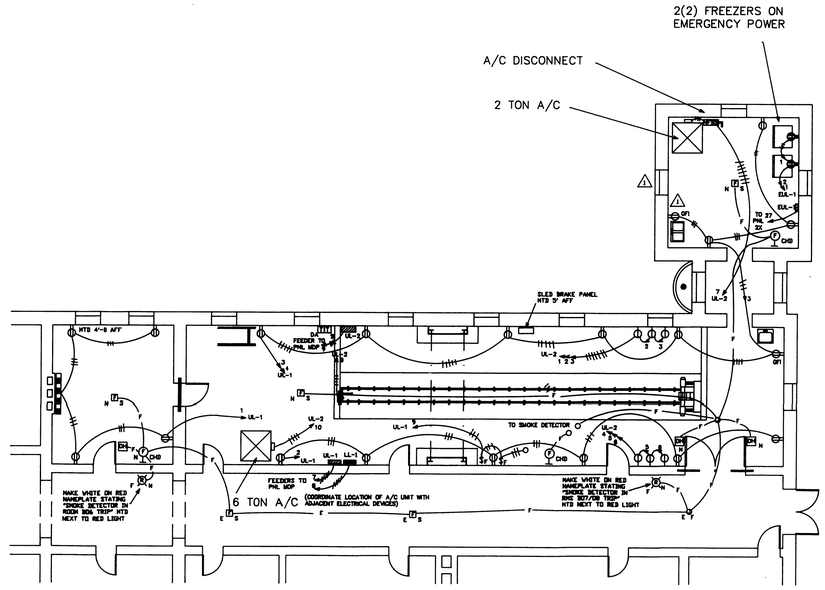

3 BASEMENT POWER PLAN
2-E-2 1/8"=1'-0"

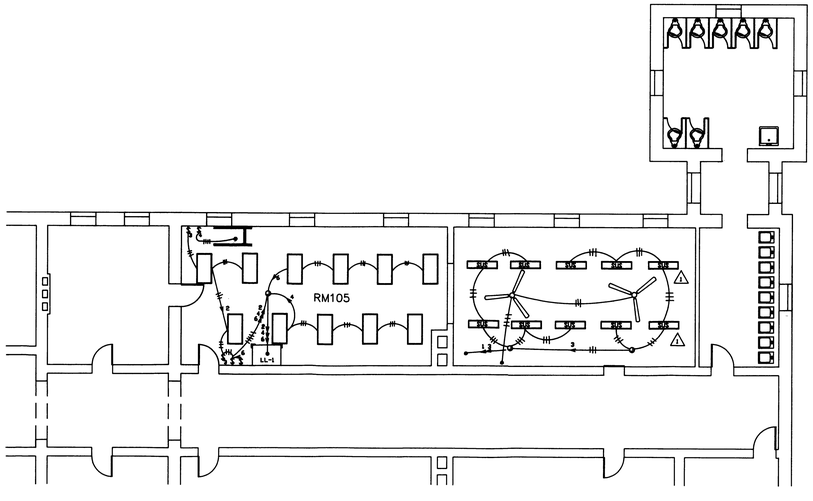

2 FIRST FLOOR LIGHTING PLAN
2-E-2 1/8"=1'-0"

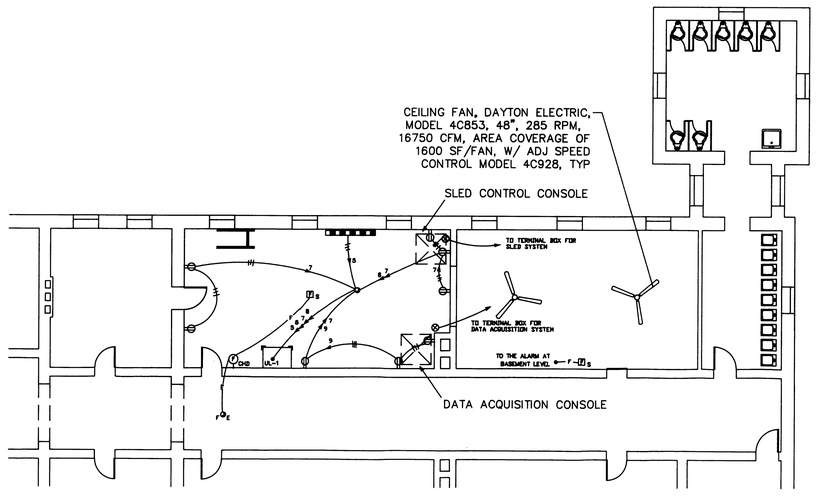

4 FIRST FLOOR POWER PLAN
2-E-2 1/8"=1'-0"

SYMBOLS & ABBREVIATIONS

- NEW 1X4 RECESSED FLUORESCENT CEILING LIGHT FIXTURE SEE DETAIL DWG 2-E-5
- NEW 2X4 RECESSED FLUORESCENT CEILING LIGHT FIXTURE SEE DETAIL DWG 2-E-5
- NEW 1X4 SURFACED FLUORESCENT CEILING LIGHT FIXTURE SEE DETAIL DWG 2-E-5
- (1) NEW 16"x48" SUSPENDED FLUORESCENT CEILING LIGHT FIXTURE SUSPEND 3FT. BELOW CEILING FROM UNISTRUT MOUNTED FROM JOISTS SEE DETAIL DWG 2-E-5
- 208V SINGLE POLE RECEPT FOR PHOTO FLOOD LIGHTS MTD 18" AFF SEE DETAIL DWG 2-E-5
- DUPLEX RECEPTACLE 'GFI' DENOTES GROUND FAULT TYPE SEE DETAIL DWG 2-E-5
- DUPLEX RECEPT ON EMERGENCY CIRCUIT MTD 18" AFF SEE DETAIL DWG 2-E-5
- ELECTRICAL STRIP MOLD MTD 4' AFF 20A OUTLETS ON 1'-0" CENTERS
- NON-FUSABLE SAFETY SWITCH SEE DETAIL DWG 2-E-5
- LIGHTING PANELBOARD DESIGNATED 'LL' SEE DETAIL DWG 2-E-5
- POWER PANELBOARD DESIGNATED 'UL' SEE DETAIL DWG 2-E-5
- F S — SMOKE DETECTOR
- DH — ELECTRO-MAGNETIC TYPE DOOR HOLDER
- F CHD — FIRE ALARM AUDIBLE VISUAL DEVICE MTD 7'-6" AFF OR AS CEILING HEIGHT PERMITS 'CH' DENOTES CHIME 'D' DENOTES FLASHING DOME LIGHT
- F — RED SMOKE DETECTOR TRIP INDICATOR LIGHT
- —F— FIRE ALARM CONDUIT RUN - MIN 3/4"
- J F — J-BOX FOR FIRE ALARM SYSTEM
- J — J-BOX
- T DA — TERMINAL BOX FOR DATA ACQUISITION SYSTEM
- T SL — TERMINAL BOX FOR SLED SYSTEM
- CONDUIT TERMINATED 6" AFF IN STANDARD BOX FOR EXTENSION TO EQUIPMENT AS DIRECTED
- RISER UP
- RISER DOWN
- 12 — HOME RUN TO PANEL-NUMBER OF CIRCUITS IN ONE CONDUIT INDICATED BY NUMBER OF ARROWS-NUMERICAL DESIGNATION INDICATES CIRCUIT NUMBER IN PANELBOARD
- $T — FAN CONTROL
- 'N' DENOTES NEW
- 'E' DENOTES EXISTING

N

Revisions	Date
1 Removed metal halide light fixtures, exhaust fan & starters added fluorescent light fixtures	4-5-90

Drawing Title: ELECTRICAL POWER, LIGHTING & FIRE ALARM PLANS	Project Title: HORIZONTAL IMPACT SLED BUILDING 2		Date: 2/12/90
Approved Division Chief	Building Number: 2	Checked: TAH	Drawn: FWB
Approved Service Director: THOMAS A. HEYDEL	Location: MILWAUKEE, WISCONSIN		Drawing No.: 2-E-2

Peterans Engineering

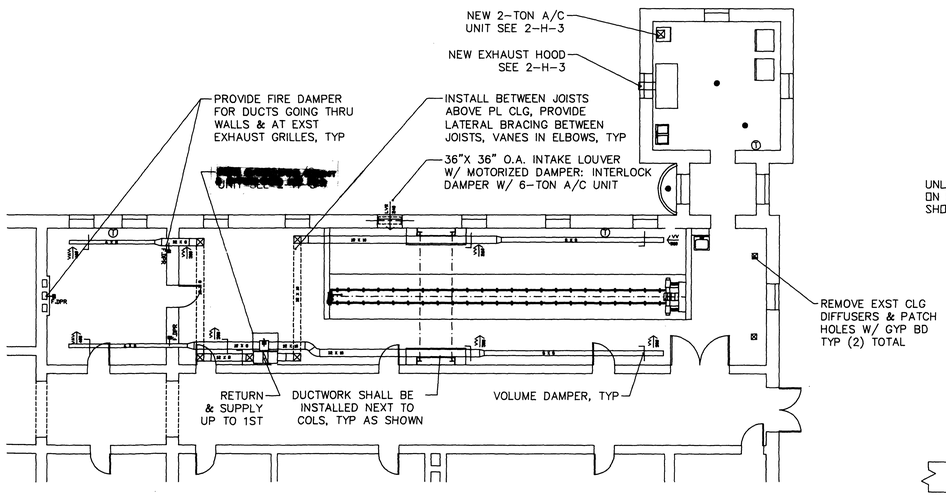

1 BASEMENT FLOOR HVAC
2-H-2 1/8"=1'-0"

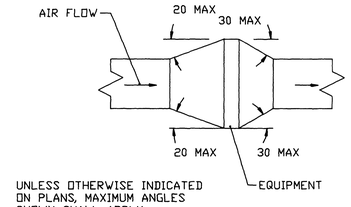

PLAN OR SIDE VIEW

3 DUCT TRANSFORMATION W/ EQUIPMENT IN DUCT
2-H-2 1/2"=1'-0"

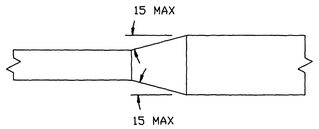

PLAN OR SIDE VIEW

4 DUCT TRANSITION
2-H-2 1/4"=1'-0"

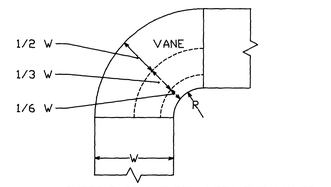

SHORT RADIUS ELBOW WITH TWO VANES

R SHALL EQUAL OR BE GREATER THAN 1/6 W

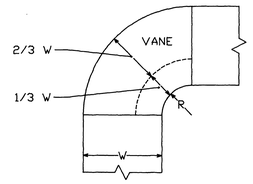

SHORT RADIUS ELBOW WITH ONE VANE

R SHALL EQUAL OR BE GREATER THAN 1/3 W

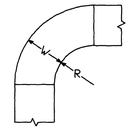

STANDARD RADIUS ELBOW WITH ONE VANE

R SHALL EQUAL OR BE GREATER THAN* W

1. THE INTERIOR SURFACE OF ALL RADIUS ELVOWS SHALL BE MADE ROUND

2. ALL STANDARD RADIUS ELBOWS SHOWN ON PLANS MAY BE MADE SHORT RADIUS ELBOWS. ALL SHORT RADIUS ELBOWS SHALL HAVE VANES. VANES SHALL BE CONSTRUCTED, SUPPORTED AND FASTENED AS RECOMMENDED BY SMACNA.

7 RADIUS ELBOWS
2-H-2 1"=1'-0"

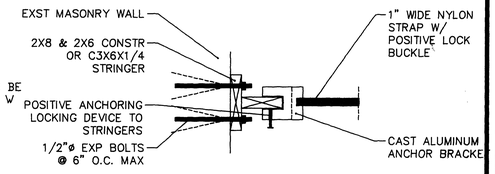

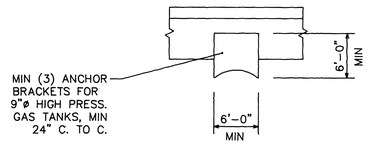

NOTE: CONTRACTOR MAY PROVIDE PREFABRICATED HIGH PRESSURE GAS STORAGE RACKS, SUBMIT FOR VA APPROVAL

9 H.P. GAS STORAGE RACK
2-H-2 1-1/2"=1'-0"

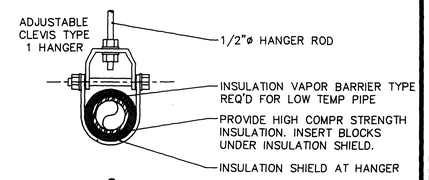

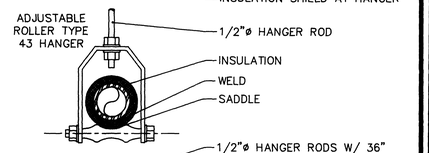

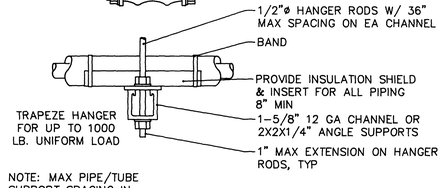

NOTE: MAX PIPE/TUBE SUPPORT SPACING IN ACCORDANCE W/ NPC & VA STANDARDS

10 TYPICAL PIPE HANGERS
2-H-2 3"=1'-0"

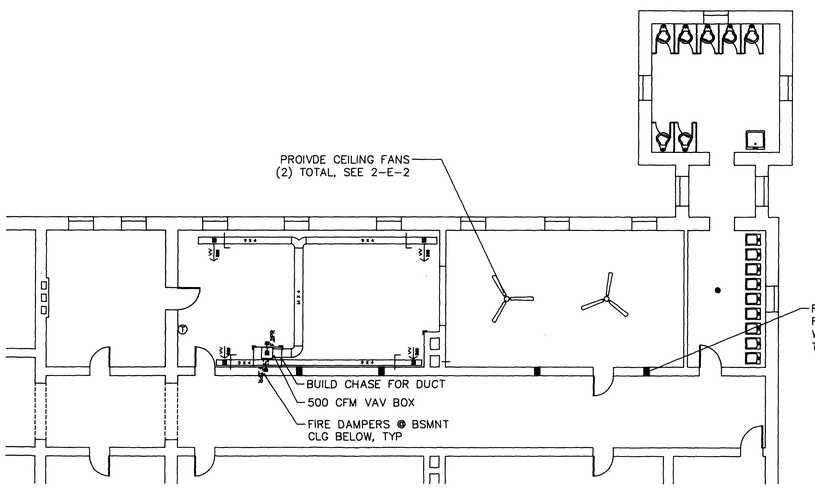

2 FIRST FLOOR HVAC
2-H-2 1/8"=1'-0"

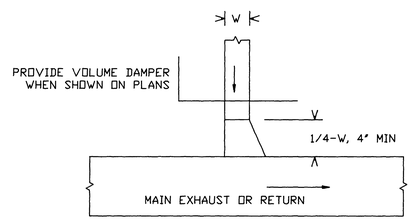

PLAN OR SIDE VIEW

5 EXHAUST OR RETURN BRANCH DUCT
2-H-2 1"=1'-0"

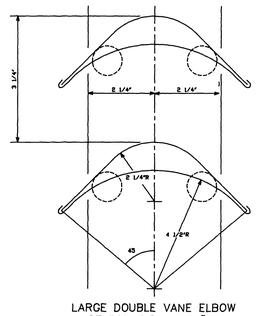

LARGE DOUBLE VANE ELBOW USE FOR ELBOWS 36" OR WIDER AND ANY DEPTH

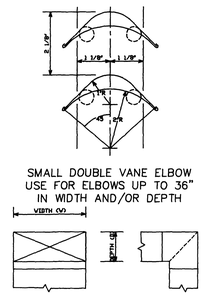

SMALL DOUBLE VANE ELBOW USE FOR ELBOWS UP TO 36" IN WIDTH AND/OR DEPTH

TYPICAL ELBOW

NOTES:

1. ALL SQUARE OR RECTANGULAR ELBOWS SHALL HAVE ONE ON THE TWO TYPES OF TURNING VANES SHOWN ABOVE. SINGLE VANE ELBOWS WILL NOT BE PERMITTED.

2. VANES SHALL BE CONSTRUCTED, SUPPORTED AND FASTENED AS RECOMMENDED BY SMACNA.

3. ALL SQUARE OR RECTANGULAR ELBOWS SHOWN ON PLANS FOR EXHAUST OR RETURN DUCT MAY BE MADE RADIUS ELBOWS PROVIDED SPACE PERMITS RADIUS INSTALLATION.

4. ALL SQUARE OR RECTANGULAR ELBOWS SHOWN ON PLANS FOR SUPPLY DUCT MAY BE MADE RADIUS ELBOWS PROVIDED SPACE PERMITS RADIUS INSTALLATION AND/OR THERE ISN'T AN OUTLET OR TAKE-OFF WITHIN5D ON THE DOWNSTREAM SIDE OF THE ELBOW.

8 SQUARE OR RECTANGULAR ELBOW VANES
2-H-2 NO SCALE

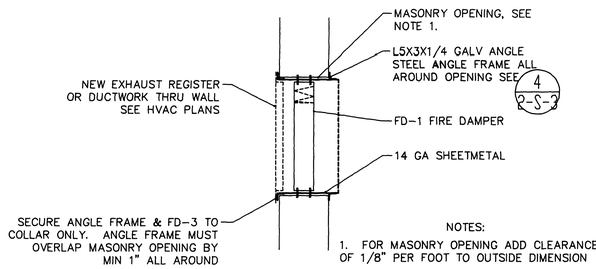

NOTES:

1. FOR MASONRY OPENING ADD CLEARANCE OF 1/8" PER FOOT TO OUTSIDE DIMENSION

2. FIRE/DAMPER MUST BE INSTALLED IN ACCORDANCE WITH NFPA PAMPHLET 90A.

6 FIRE DAMPER DETAIL
2-H-2 3"=1'-0"

MAXIMUM PIPE/TUBING SUPPORT SPACING, FEET

NOM. SIZE	THRU 3/4"	1"	1-1/4"	1-1/2"	2"	2-1/2"	3"	4"	5"	6"	8"	10"	12"	14"	16"	18"	20"	24"
PIPE	7 FT	7	7	9	10	11	12	14	16	17	19	22	23	25	27	28	30	32
TUBING	5 FT	6	7	8	8	9	10	12	13	14	16	--	--	--	--	--	--	--

NOTE: FOR TRAPEZE HANGER TAKE SPACING OF SMALLEST SIZE ON TRAPEZE.

ABBREVIATIONS & SYMBOLS

VV VARIABLE VOLUME

VAV VARIABLE AIR VOLUME

THERMOSTAT

NEW DUCTWORK FIRST NUMBER INDICATES WIDTH, SECOND NUMBER INDICATES DEPTH

WALL DIFFUSER, TYPE & CFM INDICATED

VOLUME DAMPER

CEILING DIFFUSER, TYPE & CFM INDICATED

FIRE DAMPER

DUCTWORK UP OR DOWN

DUCTWORK ELBOWS UP INTO CEILING BASEMENT ONLY WHERE SHOWN

STANDARD RADIUS ELBOW

NEW DUCTWORK ABOVE GYB CEILING, PROVIDE BRACING BETWEEN JOISTS FOR THIS DUCTWORK. 1ST NO. INDICATES WIDTH, 2ND NO. INDICATES DEPTH

NOTE: SIZE DIFFUSERS IN ACCORDANCE W/ MFG'S REQ'S, PROVIDE THERMOSTATS CONN. TO VAV'S & A/C'S AS INDICATED.

Revisions | Date

SCANNED
AUG 27 1998

Drawing Title: HVAC FLOOR PLANS AND DETAILS	Project Title: HORIZONTAL IMPACT SLED BUILDING 2		Date: 2/15/90
Approved Division Chief	Building Number: 2	Checked: TAH	Drawn: JWD
Approved Service Director: THOMAS A. HEYDEL	Location: MILWAUKEE, WISCONSIN		Drawing No.: 2-H-2

Veterans Administration

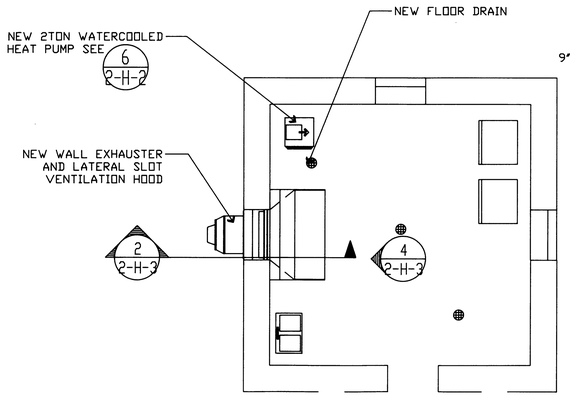

1 SPECIMEN ROOM PLAN
2-H-3 1/4"=1'-0"

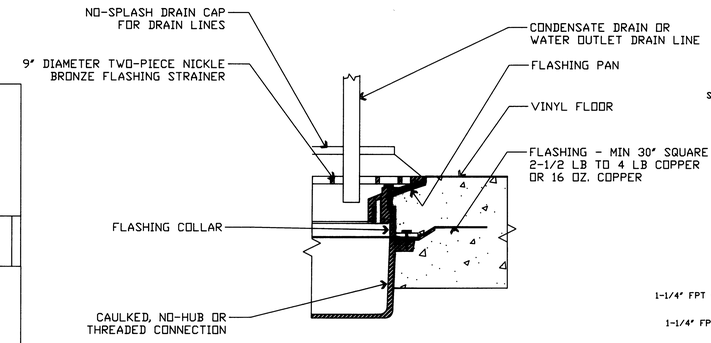

3 TYPE F FLOOR DRAIN
2-H-3 3"=1'-0"

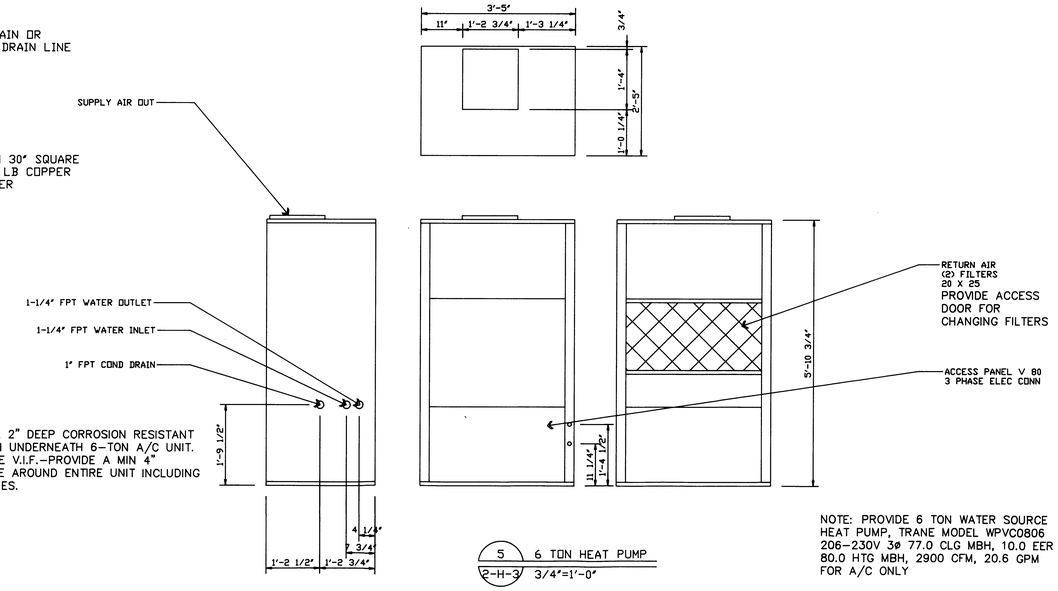

5 6 TON HEAT PUMP
2-H-3 3/4"=1'-0"

NOTE: PROVIDE 6 TON WATER SOURCE HEAT PUMP, TRANE MODEL WPVC0806 208-230V 3ø 77.0 CLG MBH, 10.0 EER 80.0 HTG MBH, 2900 CFM, 20.6 GPM FOR A/C ONLY

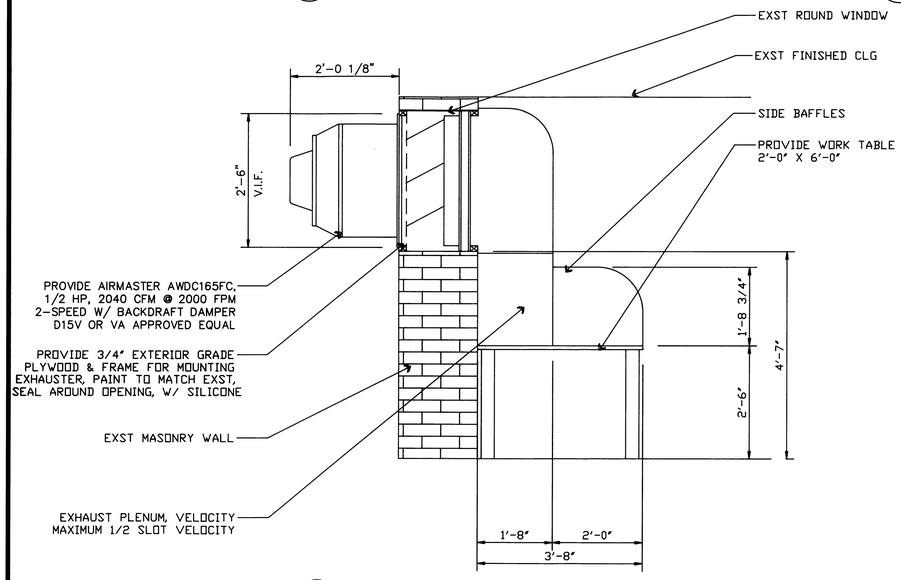

2 EXHAUST HOOD SECTION
2-H-3 3/4"=1'-0"

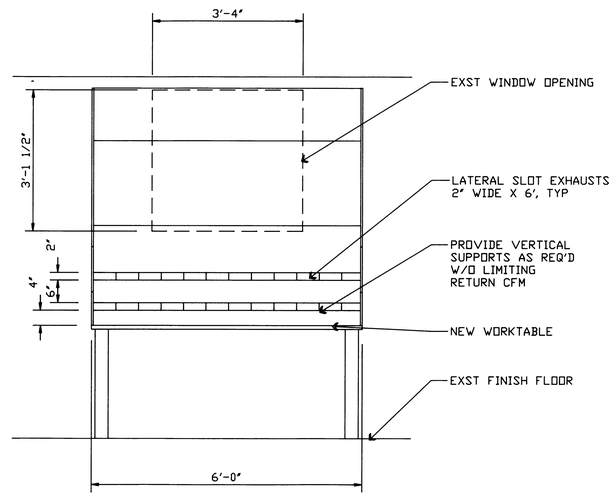

4 EXHAUST HOOD ELEVATION
2-H-3 3/4"=1'-0"

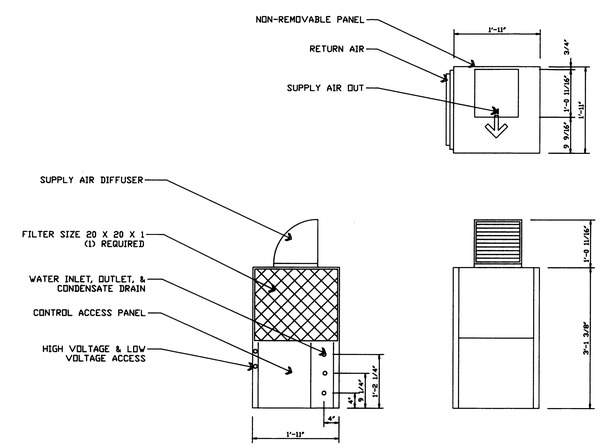

NOTE: PROVIDE 2 TON WATER SOURCE HEAT PUMP, TRANE MODEL WPVC0242 208-230V 1ø 25.4 CLG MBH, 11.2 EER, 35.0 HTG MBH, 800 CFM, 6.6 GPM FOR A/C ONLY

6 2 TON HEAT PUMP
2-H-3 3/4"=1'-0"

FINNED PIPE RADIATION SCHEDULE: (STEAM)

RM	UNIT	ELEMENT SIZE	OUTPUT MBH	FINS SIZE	FINS/LF	CAPACITY BTU/HR/LF	CABINET DEPTH	CABINET WIDTH	REMARKS
B06	CS-1	1.25 x 5'6	6.3	3.25 X 3.25	50	1150	3-7/8	3 3/4"	CLG MOUNTED
B07A	CS-2	1.25 X 7'6	13.1	3.25 X 5.25	58	1750	3-7/8	5-3/4	CLG MOUNTED
B07B	CS-2	1.25 X 7'6	13.1	3.25 x 5.25	58	1750	3-7/8	5-3/4	CLG MOUNTED
B07C	CS-3	1.25 X 6'6	11.4	3.25 X 5.25	58	1750	3-7/8	5-3/4	CLG MOUNTED
B08	2CS3	1.25 X 6'6	22.8	3.25 X 5.25	58	1750	3-7/8	5-3/4	CLG MOUNTED
105	24S1	1.25 X 6'	22.7	3.25 X 5.25	58	3785	4	24	SLOPE TOP WALL MNTD

BASED ON TRANE TYPE CS FOR CEILING MOUNTED AND TYPE S FOR SLOPED TOP WALL MOUNTED. 1 1/4" CA COPPER W/ ALUMINUM FINS 0.0135" THICK, E.A.T. 65F @ 5 PSIG. INSTALL HEIGHT FOR 24S IS 25 1/4", 2 TIERS @ 9 1/2" CENTERS. ALL COMPONENTS SHALL BE TRANE TO MATCH EXISTING COMPONENTS OF BLDGS ON STATION.

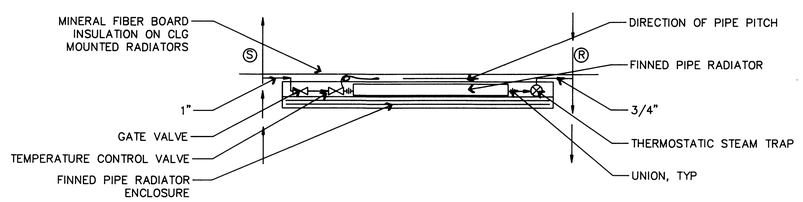

7 TYP FINNED PIPE RADIATOR & ENCLOSURE DETAIL
2-H-3 NO SCALE

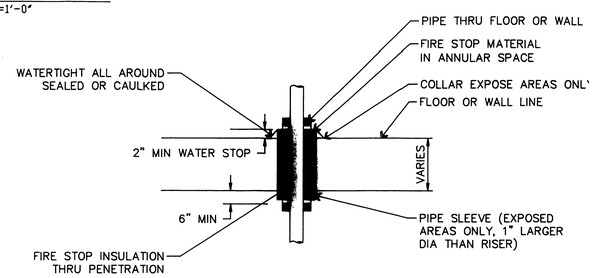

8 PIPE PENETRATIONS FOR WALL & FLOOR
2-H-3 NO SCALE

Revisions | Date

SCANNED
AUG 27 1998

Drawing Title: HVAC DETAILS AND SECTIONS	Project Title: HORIZONTAL IMPACT SLED BUILDING 2		Date: 2/15/90
Approved: Division Chief	Building Number: 2	Checked: TAH	Drawn: JWD
Approved: Service Director: THOMAS A. HEIDEL	Location: MILWAUKEE, WISCONSIN		Drawing No.: 2-H-3

Veterans Administration

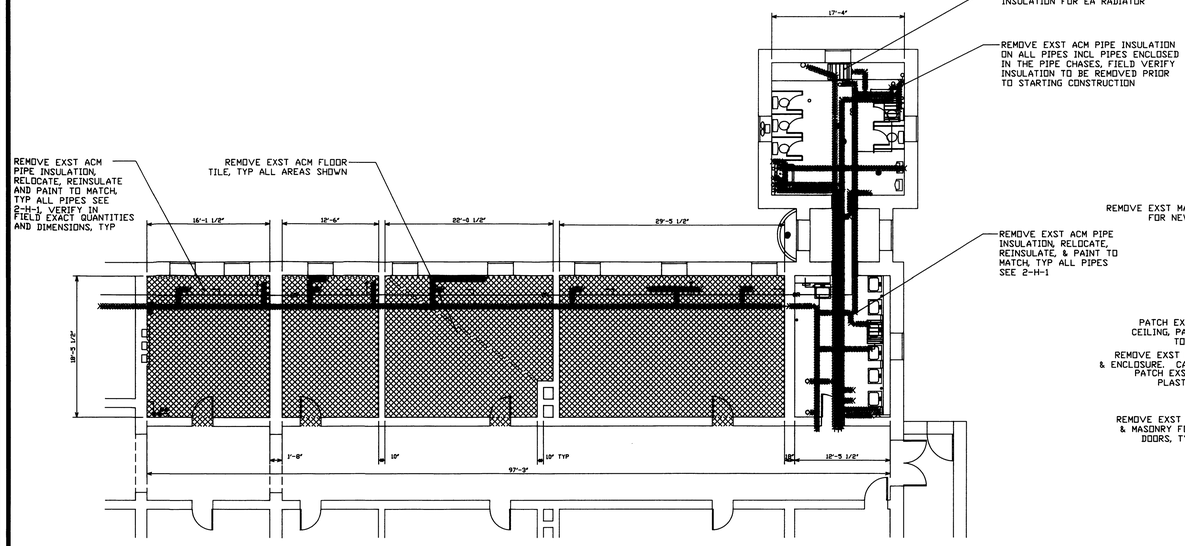

1 BASEMENT PLAN ASBESTOS REMOVAL
2-D-1 1/8"=1'-0"

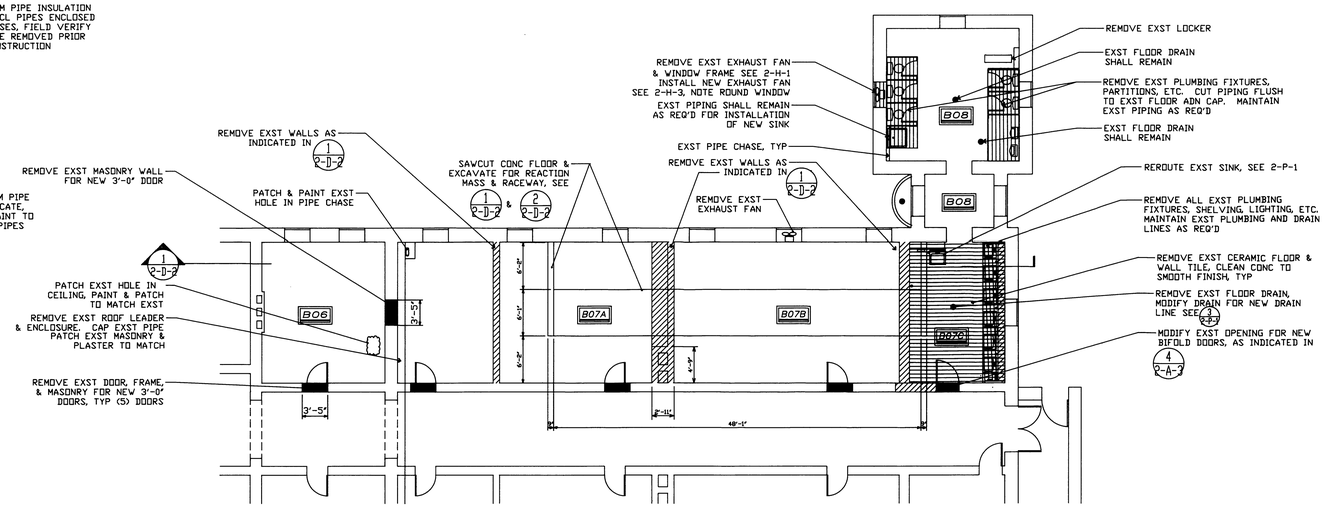

3 BASEMENT FLOOR DEMOLITION PLAN
2-D-1 1/8"=1'-0"

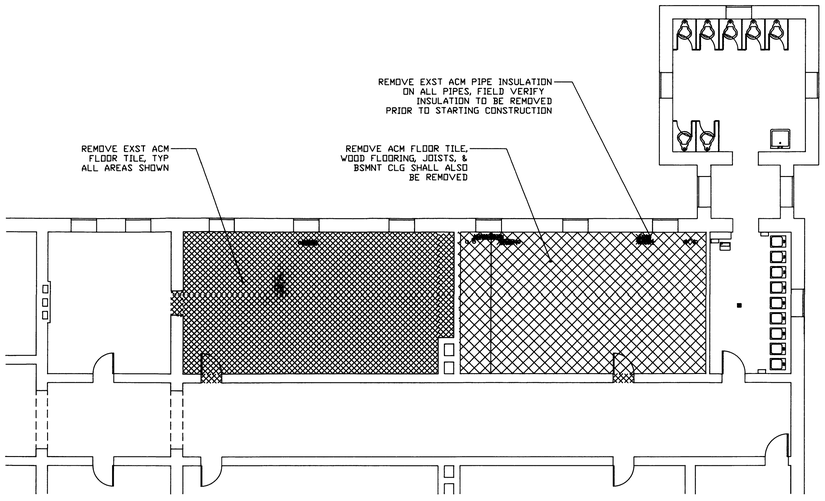

2 FIRST FLOOR ASBESTOS REMOVAL
2-D-1 1/8"=1'-0"

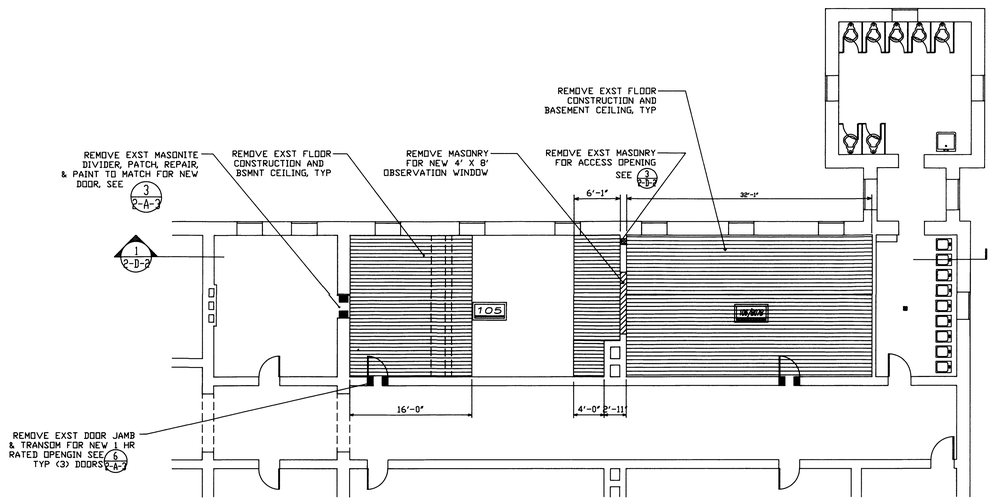

4 FIRST FLOOR DEMOLITION PLAN
2-D-1 1/8"=1'-0"

NOTE: IT IS THE CONTRACTOR'A REAPONSIBILITY TO COORDINATE ALL ACM REMOVAL OF FLOOR TILE, MASTIC & PIPE INSULATION WITH EACH OF THE VARIOUS DISCIPLINES; ARCHITECTURAL, STRUCTURAL, MECHANICAL ETC. VERIFY ALL DIMENSIONS AND QUANTITIES IN THE FIELD PRIOR TO REMOVAL.

ABBREVIATIONS & SYMBOLS

- ASBESTOS FLOOR TILE REMOVAL
- ASBESTOS FLOOR TILE AND FLOORING CONSTRUCTION REMOVAL
- FLOORING CONSTRUCTION AND CEILING REMOVAL
- WALL CONSTRUCTION REMOVAL
- PLUMBING, LIGHTING FIXTURES, AND ACCESSORY REMOVAL
- REMOVE EXST DOOR, FRAME, TRIM, AND THRESHOLD AS REQ'D. PROVIDE NEW DOOR, FRAME, TRIM, AND THRESHOLD, SEE DOOR SCHEDULE FOR DEMOLITION SEE DETAIL 4/2-D-2
- REMOVE EXST DOOR JAMB & TRANSOM AS INDICATED ON SHEET 2-A-3. DOOR WAY TO BE RECONSTRUCTED TO PROVIDE A 1 HR FIRE RATING, SEE 2-A-3
- REMOVE EXST ACM PIPE INSULATION ON HORIZONTAL PIPES & VERTICAL RISERS INDICATED; ALL ACM PIPE INSULATION SHALL BE REMOVED IN THE ROOMS SHOWN IN PLANS 1/2-D-2 & 2/2-D-2 VERIFY IN THE FIELD ALL INSULATION TO BE REMOVED PRIOR TO STARTING CONSTRUCTION.

Revisions	Date

SCANNED
AUG 26 1998

Drawing Title: ASBESTOS AND DEMOLITION FLOOR PLANS	Project Title: HORIZONTAL IMPACT SLED BUILDING 2		Date: 2-13-90
Approved: Division Chief	Building Number: 2	Checked: TAH	Drawn: JWD
Approved: Service Director: THOMAS A. HEYDEL	Location: MILWAUKEE, WISCONSIN		Drawing No.: 2-D-1 Dwg. 2 OF 17

Veterans Administration

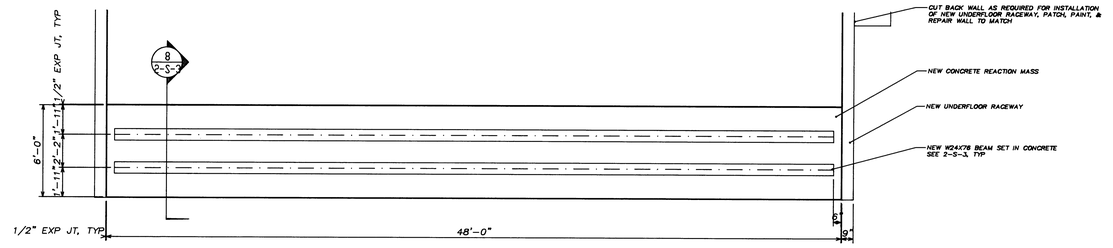

5 REACTION MASS PLAN
2-A-1 1/4"=1'-0"

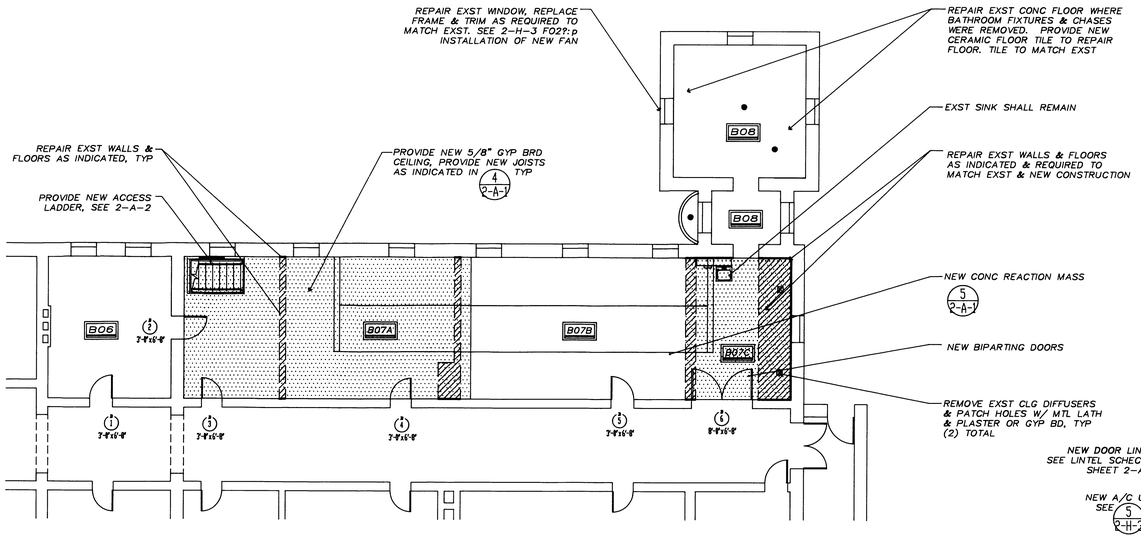

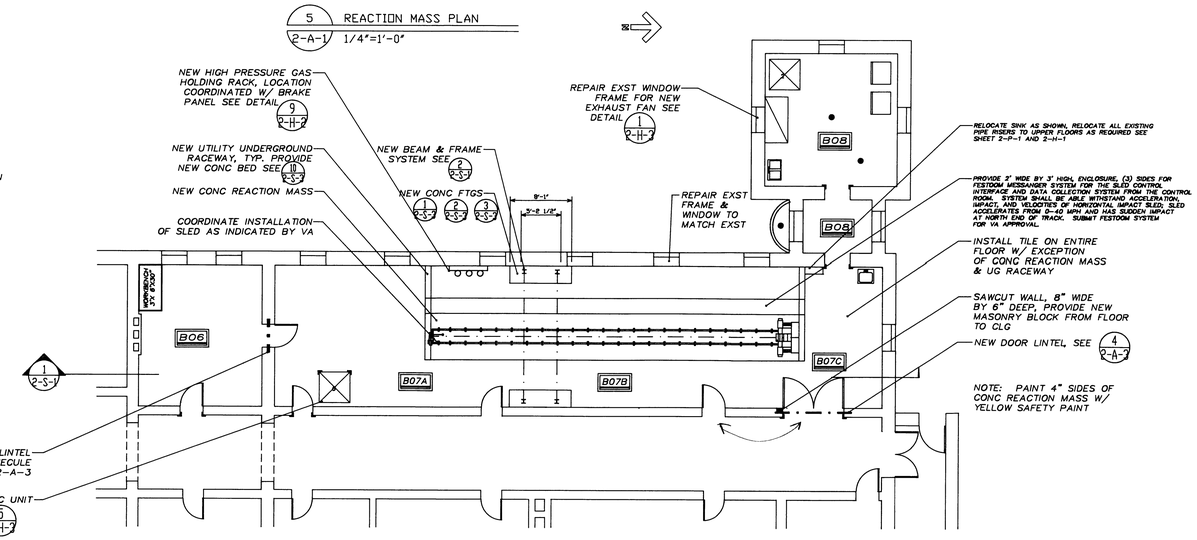

1 BASEMENT FLOOR PLAN
2-A-1 1/8"=1'-0"

3 BASEMENT FLOOR STRUCTURAL
2-A-1 1/8"=1'-0"

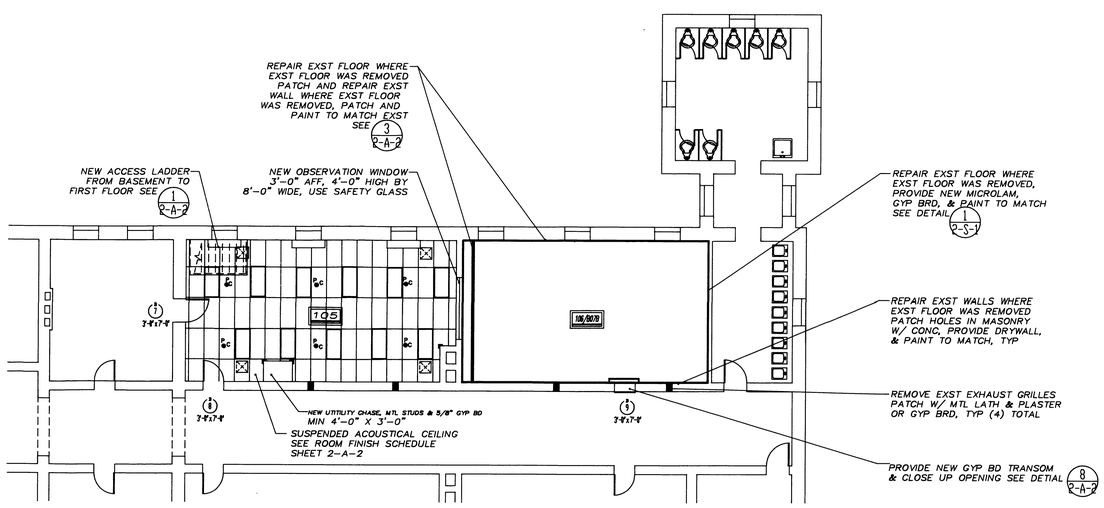

2 FIRST FLOOR PLAN
2-A-1 1/8"=1'-0"

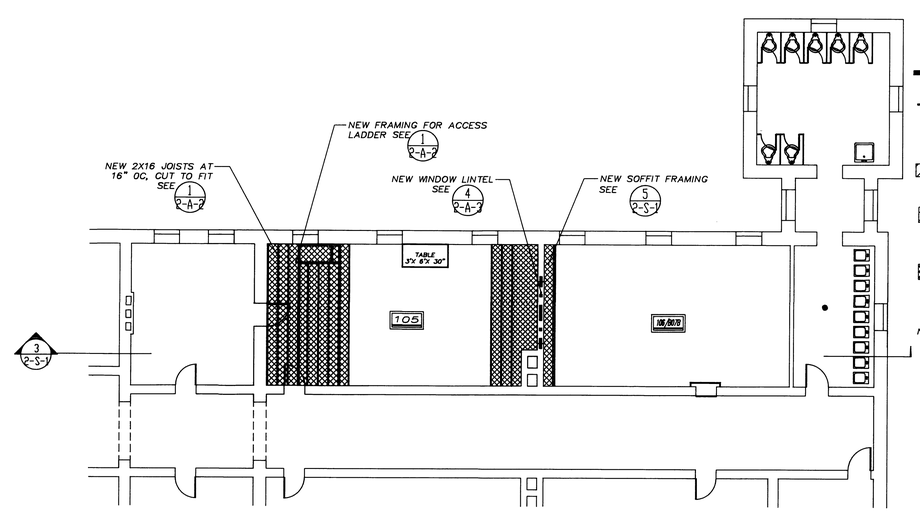

4 FIRST FLOOR STRUCTURAL
2-A-1 1/8"=1'-0"

ABBREVIATIONS & SYMBOLS

CORNER GUARDS, TYP NEW CORNER GUARDS THAT REPLACE EXISTING ONES SHALL MATCH THE EXISTING GUARDS

REPAIR EXST WALLS, PATCH HOLES IN MASONRY WALLS WITH CONCRETE, ADD DRYWALL, & PAINT

REPAIR EXST CONC FLOORS & WALLS, PATCH HOLES AND VOIDS W/ CONCRETE, GYPSUM BOARD, PATCH, PAINT TO MATCH

PROVIDE NEW 5/8" DRYWALL CEILING, PROVIDE NEW 2X JOISTS, RIPPED TO FIT, WHERE JOISTS WERE REMOVED FOR DEMOLITION OF EXST WALLS

PROVIDE NEW FLOORING AND JOISTS AS INDICATED OR REQUIRED

NOTE: IT IS THE CONTRACTOR'S RESPONSIBILITY TO COORDINATE ALL OF THE CONSTRUCTION DISCIPLINES FOR ASBESTOS REMOVAL, CARPENTRY, HVAC, PLUMBING, ELECTRICAL, ETC. FOR ALL DEMOLITION, REPAIR, NEW CONSTRUCTION, & RENOVATION

HVAC CEILING DIFFUSER, SEE 2-H-1

2X4 CEILING LIGHT FIXTURES SEE 2-E-2

SC PENDANT TYPE AUTOMATIC SPRINKLER HEAD, RECESSED INTO CEILING SEE 2-P-1

CLOSET FOR 6-TON A/C UNIT. (1) LAYER 5/8" GYP BD EA SIDE, 3" THERMAFIBER BATT INSUL. 3-5/8" MTL STUDS @ 16" O.C. V.I.F. AND COORDINATE LOCATION, SEE 2-H-2. MIN SIZE 6'-0" X 6'-6", FULL HEIGHT, NO. 10 DOOR

Revisions	Date

SCANNED
AUG 28 1998

Drawing Title: ARCHITECTURAL AND STRUCTURAL FLOOR PLANS	Project Title: HORIZONTAL IMPACT SLED BUILDING 2		Date: 2/13/90
Approved: Division Chief	Building Number: 2	Checked: TAH	Drawn: JWD
Approved: Service Director: THOMAS A. REYDEL	Location: MILWAUKEE, WISCONSIN		Drawing No.: 2-A-1 Dwg. 4 Of

Veterans Administration

DEPARTMENT OF VETERANS AFFAIRS
MEDICAL CENTER
MILWAUKEE, WISCONSIN

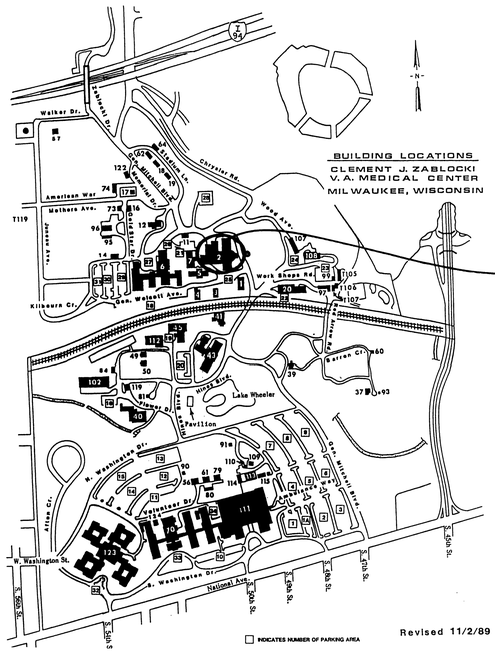

VICINITY MAP

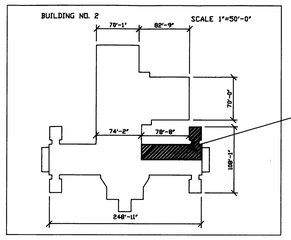

LOCATION MAP

N

DRAWING INDEX

DRAWING NO.	TITLE AND CLASSIFICATION
2-T-1	TITLE SHEET & LOCATION MAP
2-D-1	ASBESTOS REMOVAL & DEMOLITION & FLOOR PLANS
2-D-2	STRUCTURAL DEMOLITION SECTION & DETAILS
2-A-1	ARCHITECTURAL & STRUCTURAL FLOOR PLANS
2-A-2	ARCHITECTURAL DETAILS, SECTIONS, & SCHEDULES
2-A-3	DOOR DETAILS, SECTIONS, & SCHEDULES
2-S-1	STRUCTURAL SECTIONS & DETAILS
2-S-2	STRUCTURAL SECTIONS & SHORING DETAILS
2-S-3	STRUCTURAL SECTIONS & DETAILS
2-H-1	HVAC DEMOLITION & STEAM HEATING
2-H-2	HVAC FLOOR PLANS & DETAILS
2-H-3	HVAC DETAILS & SECTIONS
2-P-1	PIPING DEMO & NEW FLOOR PLANS
2-E-1	DEMOLITION ELECTRICAL POWER & LIGHTING PLANS
2-E-2	ELECTRICAL POWER, LIGHTING, & FIRE ALARM PLANS
2-E-3	ELECTRICAL DISTRIBUTION & PANELS
2-E-4	ELECTRICAL SCHEDULES & DETAILS
2-E-5	ELECTRICAL POWER, LIGHTING, & FIRE ALARM PLANS

GENERAL NOTES

1. ASBESTOS REMOVAL. IT IS THE CONTRACTOR'S RESPONSIBILITY TO COORDINATE ALL OF THE VARIOUS DISCIPLINES OF CONSTRUCTION FOR THE EXACT DIMENSIONS, LOCATIONS, AND EXTENT OF ASBESTOS REMOVAL OF PIPE AND FLOOR TILE REMOVAL.

2. THE ASBESTOS CONTAINMENT AREAS SHALL BE INSPECTED AND APPROVED BY THE VA CHIEF ENGINEER BEFORE ACTUAL ABATEMENT COMMENCES. IN ADDITION, AFTER THE CLEARANCE AIR MONITORING SAMPLES HAVE PASSED THE CONTAINMENT AREAS CAN NOT BE REMOVED UNTIL THE ASBESTOS REMOVAL HAS BEEN INSPECTED AND APPROVED BY THE CHEIF ENGINEER.

3. DEMOLITION. IT IS THE CONTRACTOR'S RESPONSIBILITY TO COORDINATE THE DEMOLITION OF EXISTING FIXTURES AND UTILITY LINES WITH THE VARIOUS DISCIPLINES OF CONSTRUCTION; ALL UTITILITY LINES SHALL BE REPLACED W/ NEW IF THEY FEED EXISTING FIXTURES, RISERS, ETC. DISCONNECT AND REMOVE EXISTING PLUMBING FIXTURES AND ALL EXPOSED PIPING. CAP OFF ALL PLUMBING PIPING WITHIN WALLS, BELOW FLOOR SLABS, OR ABOVE CEILINGS. DISCONNECT AND REMOVE EXISTING PLUMBING PIPING & REPLACE WITH NEW PIPING IN THE BASEMENT & 1ST FLOOR AS INDICATED ON 2-P-1 & 2-H-1.

4. SHORING. THE CONTRACTOR SHALL BE RESPONSIBLE FOR ALL SHORING; SUBMIT A SHORING SHOP DRAWING FOR THE VA REVIEW. SHORE THE 1ST FLOOR SEPERATELY BEFORE STARTING ANY DEMOLITION; SHORING WILL HAVE TO BE RELOCATED AS REQUIRED TO ALLOW FOR INSTALLATION OF THE SHORING OF THE BRICK WALL. PROVIDE THE STEEL STRUCTURAL SHORING AT A MINIMUM OF 4 POINTS AND AS SHOWN FOR UNIFORM SUPPORT OF THE 1st FLOOR AND BRICK WALLS. THEN REMOVE THE REMAINDER OF THE WOOD JOISTS AS REQUIRED FOR THE INSTALLATION OF THE REMAINING STEEL SHORING AS INDICATED.

5. THE FIRST FLOOR NAILER SHALL REMAIN IN PLACE OR REPLACED WITH NEW NAILERS AND SHALL BE USED TO RESECURE AND ANCHOR THE NEW FIRST FLOOR FLOORING. REMOVE EXISTING FLOOR JOISTS AS REQUIRED TO INSTALL NEW STRUCTURAL STEEL SHORING AND PROVIDE NEW 2X14'S RIPPED TO FIT EXISTING 2X12 JOISTS. JOIST SPACING SHALL BE A MAXIMUM OF 16" OC OR MATCH THE EXISTING JOIST SPACING. NOTE: FLOOR SHALL BE CONTINUEOUSLY SUPPORTED AND SHORED AS REQUIRED AND INDICATED.

6. CONTRACTOR SHALL PATCH AND REPAIR ALL AREAS AFFECTED BY DEMOLITION TO MATCH EXISTING PATCHED AREAS SHALL RECEIVE FINISHES & TRIM TO MATCH ADJACENT AREA. PATCH CEILINGS AND FLOORS TO ACHIEVE A CONTINUOUS FINSIHED APPEARANCE.

7. EXISTING FRAMING, BRICKWORK, CONDITIONS AND DIMENSIONS SHOWN ON DRAWINGS ARE BASED ON AVAILABLE INFORMATION. THE CONTRACTOR SHALL VERIFY ALL EXISTING CONDITIONS & DIMENSIONS BEFORE FABRICATION OF MATERIALS, EQUIPMENT, ETC.

Revisions	Date

SCANNED
AUG 26 1998

Drawing Title: TITLE SHEET & LOCATION MAP	Project Title: HORIZONTAL IMPACT SLED BUILDING 2		Date: 2/13/90
			Project No.
Approved: Division Chief	Building Number: 2	Checked: TAH	Drawing No. 2-T-1
Approved: Service Director: THOMAS A. HEYDEL	Location: MILWAUKEE, WISCONSIN	Drawn: JWD	Dwg. 1 Of

Veterans Administration

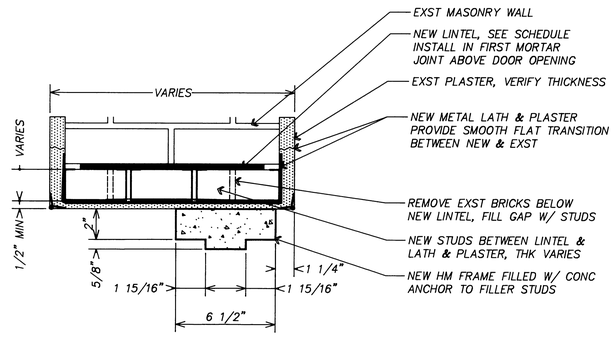

1 DOOR HEADER SECTION
2-A-3 3"=1'-0"

3

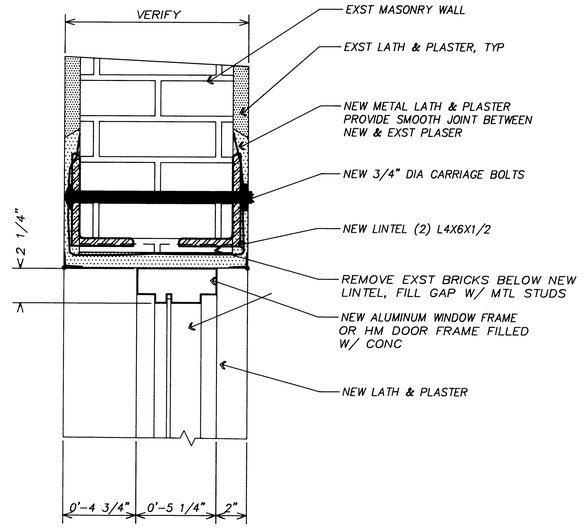

4 WINDOW HEAD SECTION
2-A-3 3"=1'-0"

5

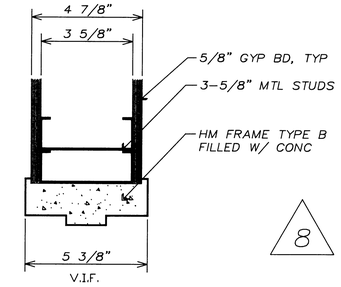

8

6 DOOR HEAD DETAIL
2-A-3 1-1/2"=1'-0"

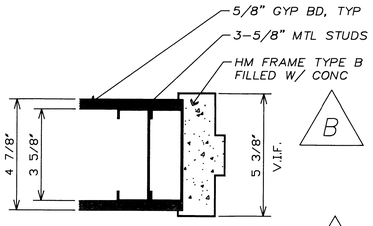

B

9

7 DOOR JAMB DETAIL
2-A-3 1-1/2"=1'-0"

DOOR SCHEDULE

NO.	DOOR SIZE W	H	TH	DOOR TYPE	MAT.	LBL	FRAME TYPE	HEAD	JAMB	THRS	LBL	MAT.	HDW SET	REMARKS
1	3'0	X 6'8	X 1-3/4	FUC	WD	B	A	3	4	HC	B	HM	HS-1	LINTEL L-1
2	3'0	X 6'8	X 1-3/4	FV	WD	B	A	3	4	HC	B	HM	HS-2	LINTEL L-2
3	3'0	X 6'8	X 1-3/4	F	WD	B	A	3	4	HC	B	HM	HS-1	LINTEL L-1
4	3'0	X 6'8	X 1-3/4	FUC	WD	B	A	3	4	HC	B	HM	HS-1	LINTEL L-1
5	3'0	X 6'8	X 1-3/4	F	WD	B	A	3	4	HC	B	HM	HS-1	LINTEL L-1
6	8'0	X 6'8	X 1-3/4	2FV	HM	B	A	5	3	HC	B	HM	HS-3	LINTEL L-3
7	3'0	X 7'0	X 1-3/4	F	WD	B	A	6	7	HC	B	HM	HS-4	V.I.F. EXST DOOR SIZE
8	3'0	X 7'0	X 1-3/4	F	WD	B	A	6	7	HC	B	HM	HS-1	V.I.F. EXST DOOR SIZE
9	3'0	X 7'0	X 7-1/4	F GYP BD		B	N/A	2	1	HC	N/A	N/A	N/A	CLOSE UP OPENING
10	4'0	X 7'0	X 1-3/4	F	WD	B	B	8	9	HC	B	HM	HS-3	GYP BD OPENING

△SEE DETAILS SHEETS 2-A-2 AND 2-A-3

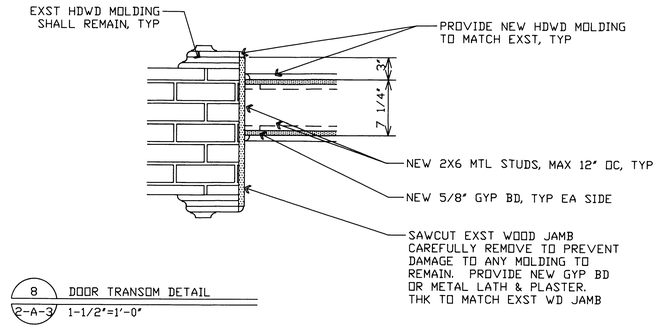

8 DOOR TRANSOM DETAIL
2-A-3 1-1/2"=1'-0"

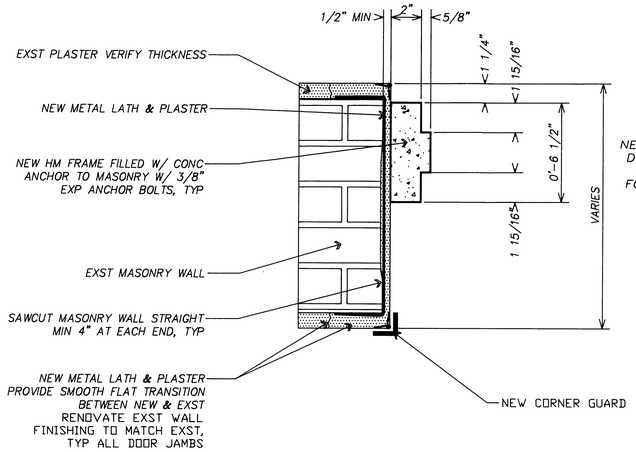

2 DOOR JAMB SECTION
2-A-3 3"=1'-0"

4

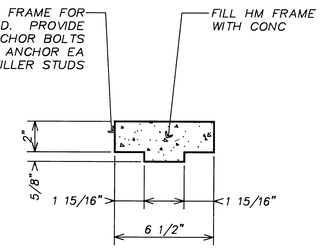

5 TYPICAL DOOR HEAD & JAMB
2-A-3 3"=1'-0"

A

LINTEL SCHEDULE

LINTEL NO.	SIZE & MATERIAL	BOLT SIZE & SPACING	REMARKS
L-1	(1) PL12X56X3/8	3/4" @ 8" OC	STAGGER BOLTS
L-2	(1) PL18X56X3/8	3/4" @ 8" OC	STAGGER BOLTS
L-3	(2) L4X6X1/2	3/4" @ 18" OC	CARRAIAGE BOLTS

NOTE: ALL LINTELS SHALL BE EXTENDED MINIMUM OF 8" PAST MASONRY OPENING TO ALLOW FOR PROPER BRG & SHEAR

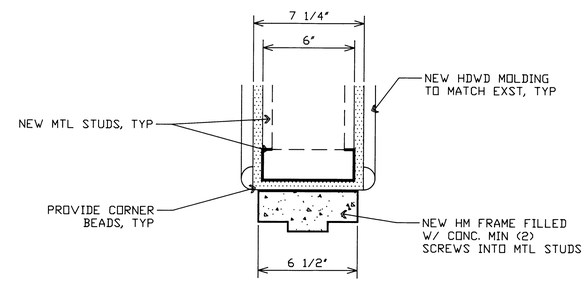

9 DOOR HEAD DETAIL
2-A-3 3"=1'-0"

6

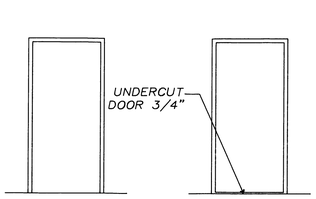

F

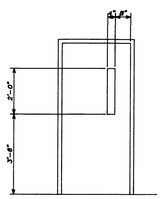

FUC

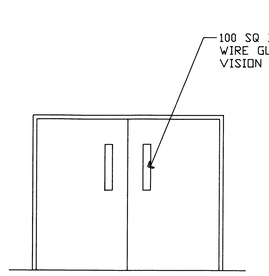

FV

2FV

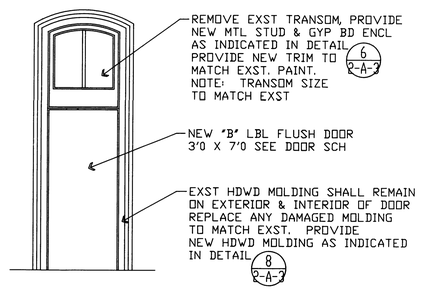

F

3 TYPICAL DOOR ELEVATIONS
2-A-3 3/4"=1'-0"

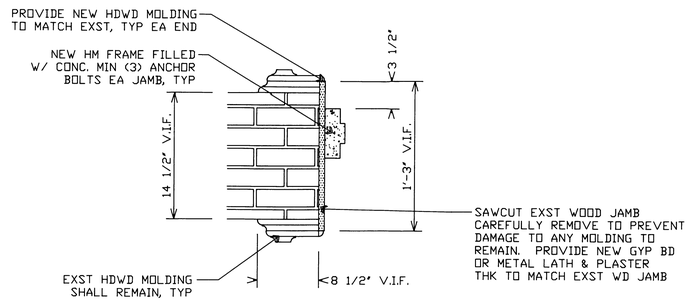

10 DOOR JAMB DETAIL
2-A-3 1-1/2"=1'-0"

7

Revisions | Date

SCANNED
AUG 26 1998

Drawing Title: DOOR DETAILS, SECTIONS AND SCHEDULES	Project Title: HORIZONTAL IMPACT SLED BUILDING 2		Date: 2/6/90
			Project No.
Approved: Division Chief	Building Number: 2	Checked: TAH	Drawn: JWD
Approved: Service Director: THOMAS A. HEYDEL	Location: MILWAUKEE, WISCONSIN		Drawing No. 2-A-3

Veterans Administration

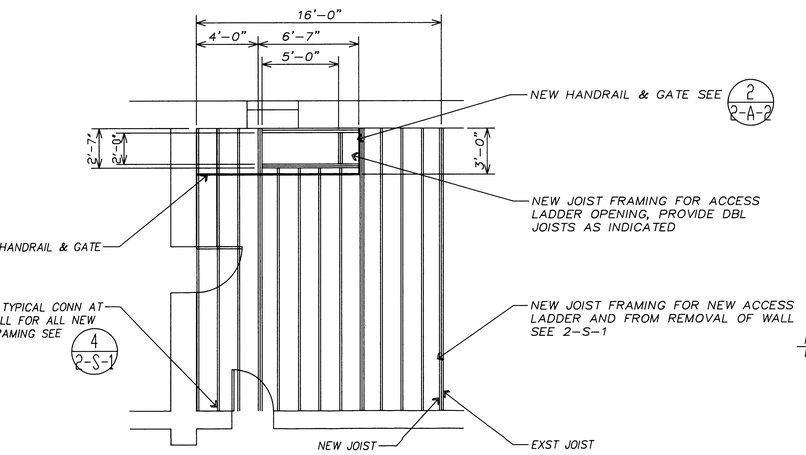

1 ACCESS LADDER FRAMING PLAN
2-A-2 3/4"=1'-0"

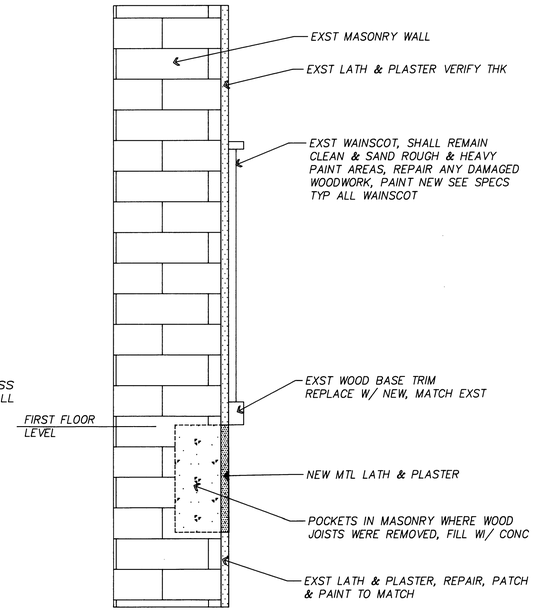

3 BAY AREA WALL SECTION
2-A-2 1 1/2"=1'-0"

ROOM FINISH SCHEDULE

RM NO.	ROOM NAME	FLOOR		BASE		WALLS								CEILING			REMARKS
						NORTH		SOUTH		EAST		WEST					
		MAT	FIN	MAT	FIN	MAT	FIN	MAT	FIN	MAT	FIN	MAT	FIN	MAT	FIN	HT.	
B06	WORK RM	CONC	VCT-1	PLST	VNYL	PLST	P-1	PLST	P-1	PLST	P-1	PLST	P-1	GYP	P-2	7'10	
B07	TEST RM	CONC	VCT-1	PLST	VNYL	PLST	P-1	PLST	P-1	PLST	P-1	PLST	P-1	GYP	P-2	7'10	BAY ~ 20'
B08	SPCMN RM	CONC	CRT	PLST	E-WD	PLST	P-1	PLST	P-1	PLST	P-1	PLST	P-1	EXST	P-2	8'0	RPR CLG
105	CONTROL RM	WD	VCT-2	WNSCT	P-3	PLST	P-1	PLST	P-1	PLST	P-1	PLST	P-1	ACT	A-1	10'0	
106	OPEN BAY	N/A	N/A	WNSCT	P-3	PLST	P-1	PLST	P-1	PLST	P-1	PLST	P-1	PLST	P-2	11'10	RPR CLG

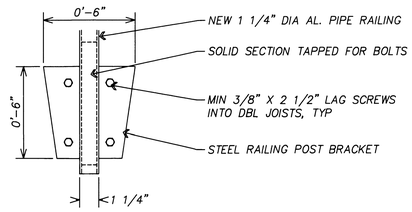

4 PIPE RAIL ANCHOR BRACKET
2-A-2 3"=1'-0"

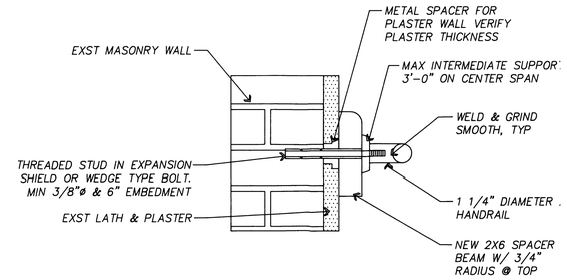

7 HANDRAIL ANCHOR BRACKET
2-A-2 3"=1'-0"

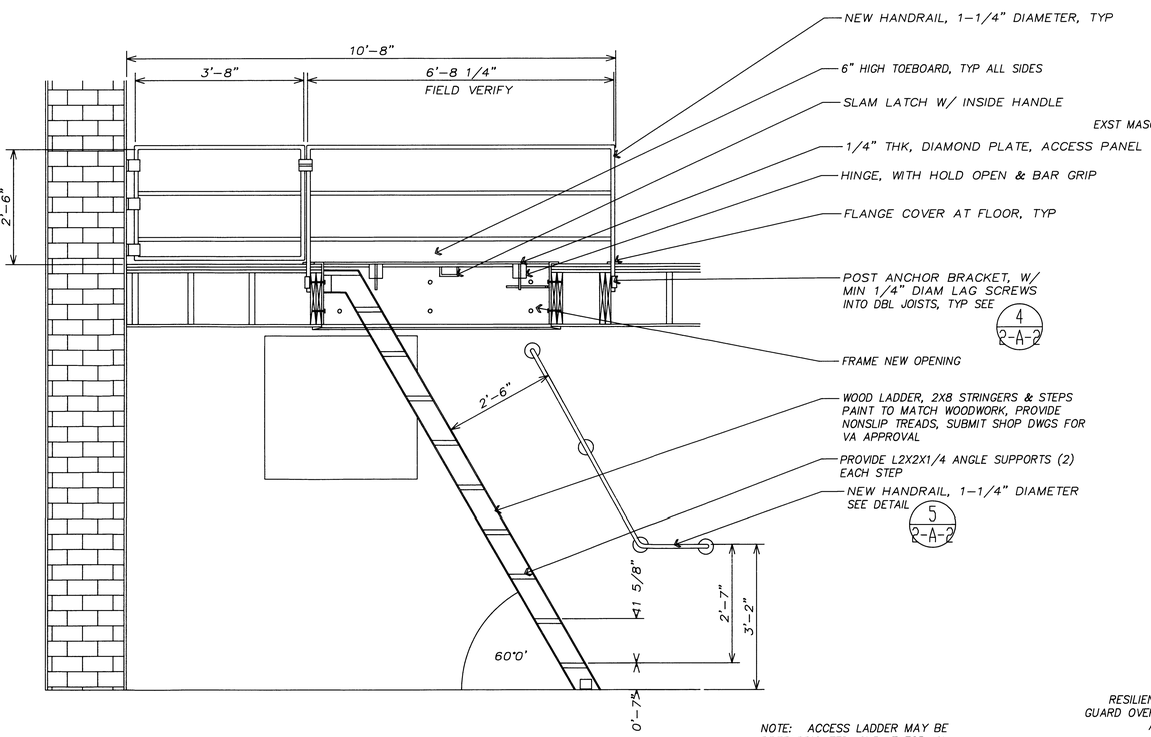

NOTE: ACCESS LADDER MAY BE PREFABRICATED, SUBMIT FOR VA APPROVAL. INSTALL HANDRAILS & GUARDRAILS IN ACCORDANCE W/ ALL VA & STATE CODES

2 LADDER HANDRAIL PLAN
2-A-2 3/4"=1'-0"

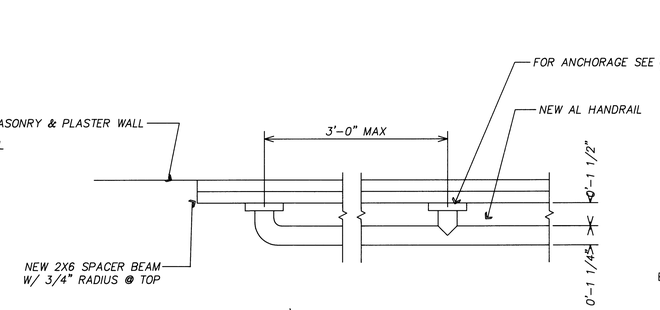

5 HANDRAIL INTERMEDIATE SUPPORT
2-A-2 3"=1'-0"

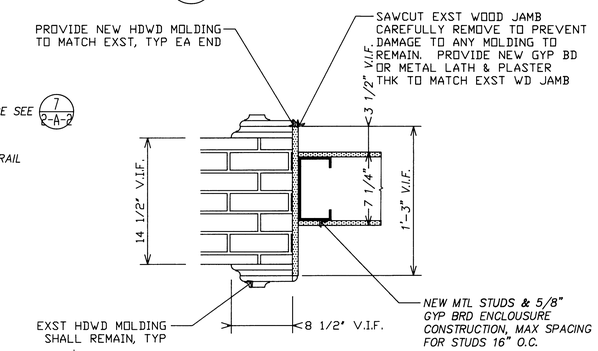

NOTE: FOR DOOR TRANSOM WALL CONSTRUCTION SEE DETAIL 6/2-A-2

8 DOOR ENCLOSURE JAMB
2-A-2 1-1/2"=1'-0"

1

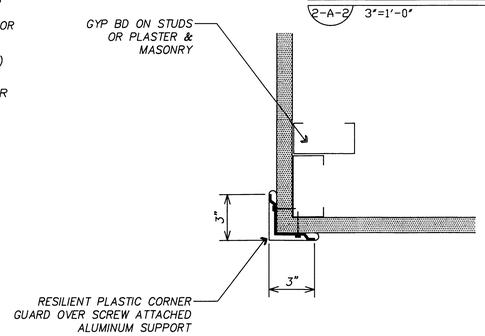

6 CORNER GUARD DETAIL
2-A-2 3"=1'-0"

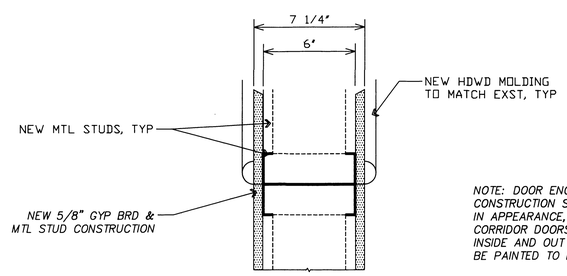

NOTE: DOOR ENCLOSURE CONSTRUCTION SHALL MATCH IN APPEARANCE, EXST CORRIDOR DOORS, BOTH INSIDE AND OUT SHALL BE PAINTED TO MATCH

9 DOOR HEAD DETAIL
2-A-2 3"=1'-0"

2

SCANNED
AUG 28 1998

Drawing Title: ARCHITECTURAL DETAILS, SECTIONS AND SCHEDULES	Project Title: HORIZONTAL IMPACT SLED BUILDING 2		Date: 2/14/90
Approved: Division Chief	Building Number: 2	Checked: TAH	Drawn: JWD
Approved: Service Director: THOMAS A. HEYDEL	Location: MILWAUKEE, WISCONSIN		Drawing No.: 2-A-2

Veterans Administration

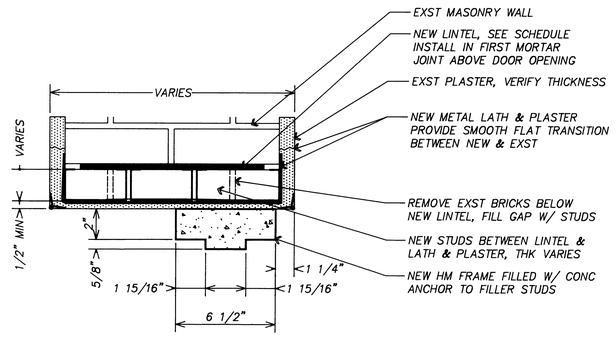

1 DOOR HEADER SECTION
2-A-3 3"=1'-0"

3

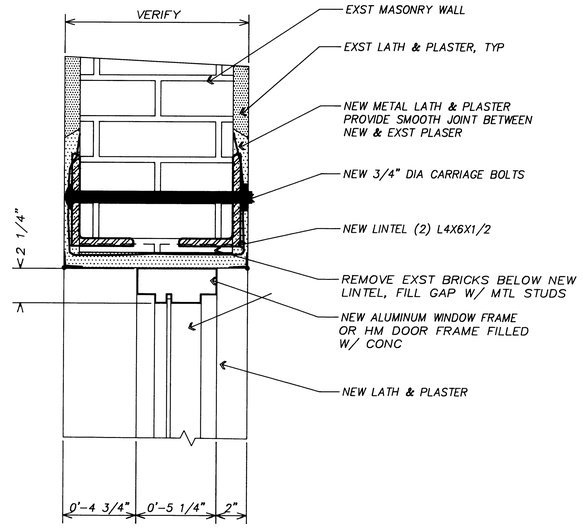

4 WINDOW HEAD SECTION
2-A-3 3"=1'-0"

5

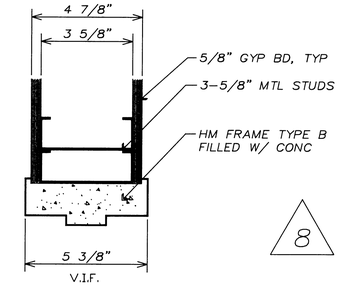

8

6 DOOR HEAD DETAIL
2-A-3 1-1/2"=1'-0"

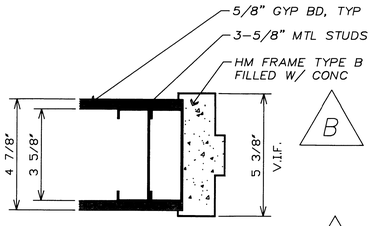

B

9

7 DOOR JAMB DETAIL
2-A-3 1-1/2"=1'-0"

DOOR SCHEDULE

NO.	DOOR SIZE W	H	TH	DOOR TYPE	MAT.	LBL	FRAME TYPE	HEAD	JAMB	THRS	LBL	MAT.	HDW SET	REMARKS
1	3'0	X 6'8	X 1-3/4	FUC	WD	B	A	3	4	HC	B	HM	HS-1	LINTEL L-1
2	3'0	X 6'8	X 1-3/4	FV	WD	B	A	3	4	HC	B	HM	HS-2	LINTEL L-2
3	3'0	X 6'8	X 1-3/4	F	WD	B	A	3	4	HC	B	HM	HS-1	LINTEL L-1
4	3'0	X 6'8	X 1-3/4	FUC	WD	B	A	3	4	HC	B	HM	HS-1	LINTEL L-1
5	3'0	X 6'8	X 1-3/4	F	WD	B	A	3	4	HC	B	HM	HS-1	LINTEL L-1
6	8'0	X 6'8	X 1-3/4	2FV	HM	B	A	5	3	HC	B	HM	HS-3	LINTEL L-3
7	3'0	X 7'0	X 1-3/4	F	WD	B	A	6	7	HC	B	HM	HS-4	V.I.F. EXST DOOR SIZE
8	3'0	X 7'0	X 1-3/4	F	WD	B	A	6	7	HC	B	HM	HS-1	V.I.F. EXST DOOR SIZE
9	3'0	X 7'0	X 7-1/4	F GYP BD		B	N/A	2	1	HC	N/A	N/A	N/A	CLOSE UP OPENING
10	4'0	X 7'0	X 1-3/4	F	WD	B	B	8	9	HC	B	HM	HS-3	GYP BD OPENING

△SEE DETAILS SHEETS 2-A-2 AND 2-A-3

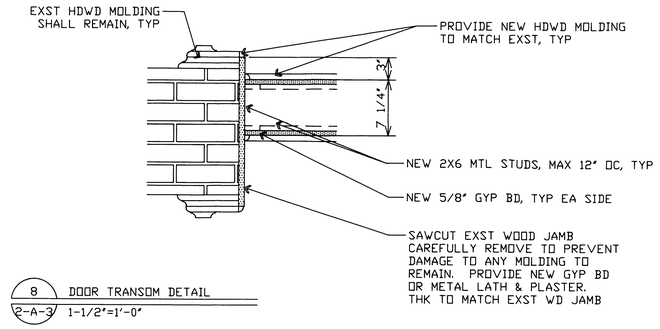

8 DOOR TRANSOM DETAIL
2-A-3 1-1/2"=1'-0"

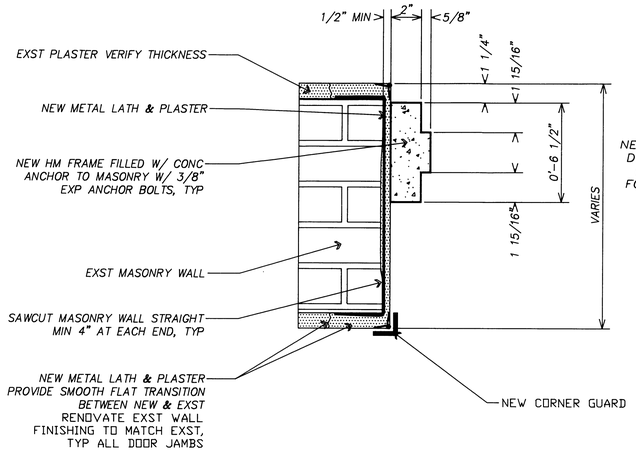

2 DOOR JAMB SECTION
2-A-3 3"=1'-0"

4

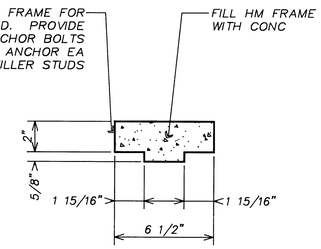

5 TYPICAL DOOR HEAD & JAMB
2-A-3 3"=1'-0"

A

LINTEL SCHEDULE

LINTEL NO.	SIZE & MATERIAL	BOLT SIZE & SPACING	REMARKS
L-1	(1) PL12X56X3/8	3/4" @ 8" OC	STAGGER BOLTS
L-2	(1) PL18X56X3/8	3/4" @ 8" OC	STAGGER BOLTS
L-3	(2) L4X6X1/2	3/4" @ 18" OC	CARRAIAGE BOLTS

NOTE: ALL LINTELS SHALL BE EXTENDED MINIMUM OF 8" PAST MASONRY OPENING TO ALLOW FOR PROPER BRG & SHEAR

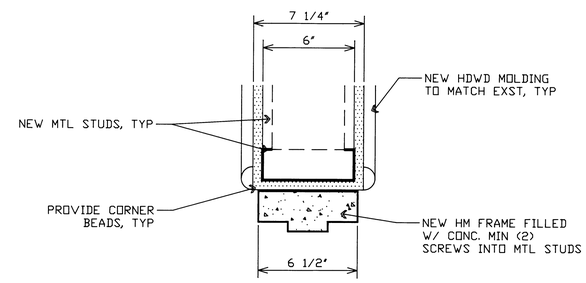

9 DOOR HEAD DETAIL
2-A-3 3"=1'-0"

6

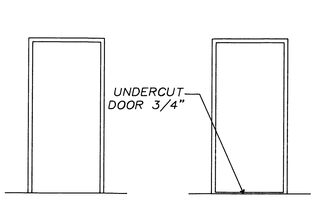

F

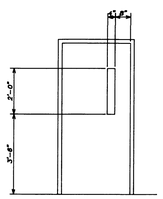

FUC

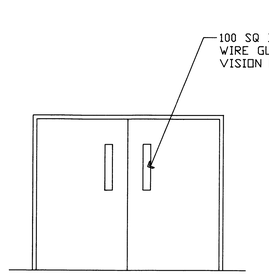

FV

2FV

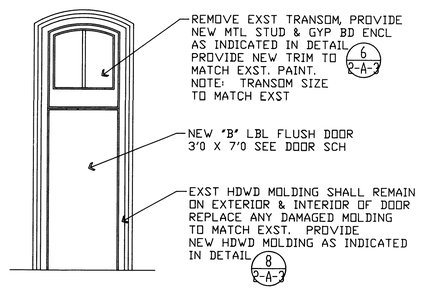

F

3 TYPICAL DOOR ELEVATIONS
2-A-3 3/4"=1'-0"

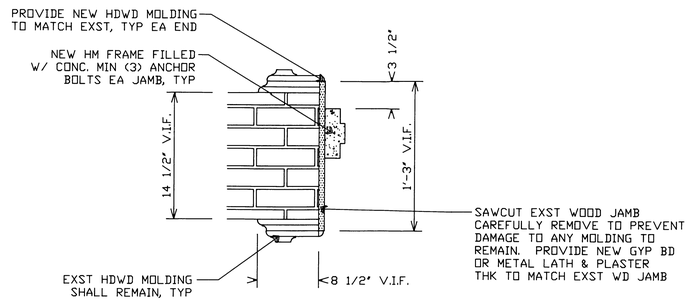

10 DOOR JAMB DETAIL
2-A-3 1-1/2"=1'-0"

7

Revisions | Date

SCANNED
AUG 26 1998

Drawing Title: DOOR DETAILS, SECTIONS AND SCHEDULES	Project Title: HORIZONTAL IMPACT SLED BUILDING 2		Date: 2/6/90
			Project No.
Approved: Division Chief	Building Number: 2	Checked: TAH	Drawn: JWD
Approved: Service Director: THOMAS A. HEYDEL	Location: MILWAUKEE, WISCONSIN		Drawing No. 2-A-3

Veterans Administration

DEPARTMENT OF VETERANS AFFAIRS
MEDICAL CENTER
MILWAUKEE, WISCONSIN

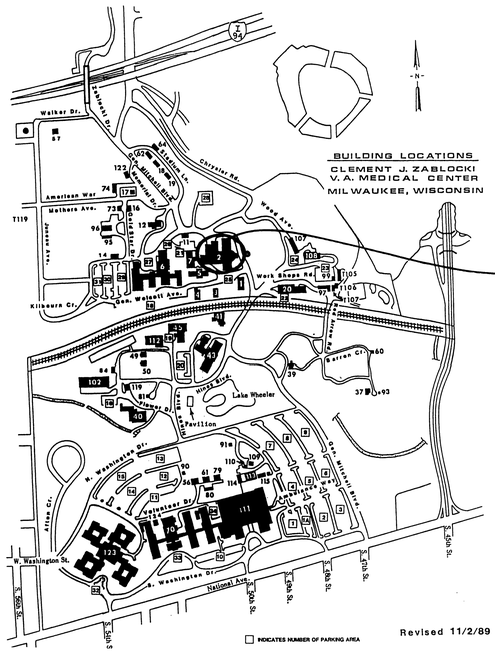

VICINITY MAP

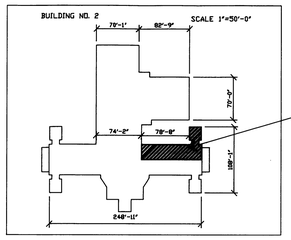

LOCATION MAP

N

DRAWING INDEX

DRAWING NO.	TITLE AND CLASSIFICATION
2-T-1	TITLE SHEET & LOCATION MAP
2-D-1	ASBESTOS REMOVAL & DEMOLITION & FLOOR PLANS
2-D-2	STRUCTURAL DEMOLITION SECTION & DETAILS
2-A-1	ARCHITECTURAL & STRUCTURAL FLOOR PLANS
2-A-2	ARCHITECTURAL DETAILS, SECTIONS, & SCHEDULES
2-A-3	DOOR DETAILS, SECTIONS, & SCHEDULES
2-S-1	STRUCTURAL SECTIONS & DETAILS
2-S-2	STRUCTURAL SECTIONS & SHORING DETAILS
2-S-3	STRUCTURAL SECTIONS & DETAILS
2-H-1	HVAC DEMOLITION & STEAM HEATING
2-H-2	HVAC FLOOR PLANS & DETAILS
2-H-3	HVAC DETAILS & SECTIONS
2-P-1	PIPING DEMO & NEW FLOOR PLANS
2-E-1	DEMOLITION ELECTRICAL POWER & LIGHTING PLANS
2-E-2	ELECTRICAL POWER, LIGHTING, & FIRE ALARM PLANS
2-E-3	ELECTRICAL DISTRIBUTION & PANELS
2-E-4	ELECTRICAL SCHEDULES & DETAILS
2-E-5	ELECTRICAL POWER, LIGHTING, & FIRE ALARM PLANS

GENERAL NOTES

1. ASBESTOS REMOVAL. IT IS THE CONTRACTOR'S RESPONSIBILITY TO COORDINATE ALL OF THE VARIOUS DISCIPLINES OF CONSTRUCTION FOR THE EXACT DIMENSIONS, LOCATIONS, AND EXTENT OF ASBESTOS REMOVAL OF PIPE AND FLOOR TILE REMOVAL.

2. THE ASBESTOS CONTAINMENT AREAS SHALL BE INSPECTED AND APPROVED BY THE VA CHIEF ENGINEER BEFORE ACTUAL ABATEMENT COMMENCES. IN ADDITION, AFTER THE CLEARANCE AIR MONITORING SAMPLES HAVE PASSED THE CONTAINMENT AREAS CAN NOT BE REMOVED UNTIL THE ASBESTOS REMOVAL HAS BEEN INSPECTED AND APPROVED BY THE CHEIF ENGINEER.

3. DEMOLITION. IT IS THE CONTRACTOR'S RESPONSIBILITY TO COORDINATE THE DEMOLITION OF EXISTING FIXTURES AND UTILITY LINES WITH THE VARIOUS DISCIPLINES OF CONSTRUCTION; ALL UTITILITY LINES SHALL BE REPLACED W/ NEW IF THEY FEED EXISTING FIXTURES, RISERS, ETC. DISCONNECT AND REMOVE EXISTING PLUMBING FIXTURES AND ALL EXPOSED PIPING. CAP OFF ALL PLUMBING PIPING WITHIN WALLS, BELOW FLOOR SLABS, OR ABOVE CEILINGS. DISCONNECT AND REMOVE EXISTING PLUMBING PIPING & REPLACE WITH NEW PIPING IN THE BASEMENT & 1ST FLOOR AS INDICATED ON 2-P-1 & 2-H-1.

4. SHORING. THE CONTRACTOR SHALL BE RESPONSIBLE FOR ALL SHORING; SUBMIT A SHORING SHOP DRAWING FOR THE VA REVIEW. SHORE THE 1ST FLOOR SEPERATELY BEFORE STARTING ANY DEMOLITION; SHORING WILL HAVE TO BE RELOCATED AS REQUIRED TO ALLOW FOR INSTALLATION OF THE SHORING OF THE BRICK WALL. PROVIDE THE STEEL STRUCTURAL SHORING AT A MINIMUM OF 4 POINTS AND AS SHOWN FOR UNIFORM SUPPORT OF THE 1st FLOOR AND BRICK WALLS. THEN REMOVE THE REMAINDER OF THE WOOD JOISTS AS REQUIRED FOR THE INSTALLATION OF THE REMAINING STEEL SHORING AS INDICATED.

5. THE FIRST FLOOR NAILER SHALL REMAIN IN PLACE OR REPLACED WITH NEW NAILERS AND SHALL BE USED TO RESECURE AND ANCHOR THE NEW FIRST FLOOR FLOORING. REMOVE EXISTING FLOOR JOISTS AS REQUIRED TO INSTALL NEW STRUCTURAL STEEL SHORING AND PROVIDE NEW 2X14'S RIPPED TO FIT EXISTING 2X12 JOISTS. JOIST SPACING SHALL BE A MAXIMUM OF 16" OC OR MATCH THE EXISTING JOIST SPACING. NOTE: FLOOR SHALL BE CONTINUEOUSLY SUPPORTED AND SHORED AS REQUIRED AND INDICATED.

6. CONTRACTOR SHALL PATCH AND REPAIR ALL AREAS AFFECTED BY DEMOLITION TO MATCH EXISTING PATCHED AREAS SHALL RECEIVE FINISHES & TRIM TO MATCH ADJACENT AREA. PATCH CEILINGS AND FLOORS TO ACHIEVE A CONTINUOUS FINSIHED APPEARANCE.

7. EXISTING FRAMING, BRICKWORK, CONDITIONS AND DIMENSIONS SHOWN ON DRAWINGS ARE BASED ON AVAILABLE INFORMATION. THE CONTRACTOR SHALL VERIFY ALL EXISTING CONDITIONS & DIMENSIONS BEFORE FABRICATION OF MATERIALS, EQUIPMENT, ETC.

Revisions	Date

SCANNED
AUG 26 1998

Drawing Title: TITLE SHEET & LOCATION MAP	Project Title: HORIZONTAL IMPACT SLED BUILDING 2		Date: 2/13/90
			Project No.
Approved: Division Chief	Building Number: 2	Checked: TAH	Drawing No. 2-T-1
Approved: Service Director: THOMAS A. HEYDEL	Location: MILWAUKEE, WISCONSIN	Drawn: JWD	Dwg. 1 Of

Veterans Administration