PLUMBING ABBREVIATIONS

A/E ARCHITECT / ENGINEE
AFF ABOVE FINISH FLOOR
AFG ABOVE FINISH GRADE

AP ACCESS PANEL
AS AUTOMATIC SPRINKLER
ASD AUTOMATIC SPRINKLER DRAIN
ASHRAE AMERICAN SOCIETY HEATING, REFRIGERATION, AIR CONDITIONING ENGINEERS
ASME AMERICAN SOCIETY MECHANICAL ENGINEERS
ASPE AMERICAN SOCIETY PLUMBING ENGINEERS
ASR AUTOMATIC SPRINKLER RISER

BFP REDUCED PRESSURE BACKFLOW PREVENTER
BHP BREAK HORSEPOWER
BSP BLACK STEEL PIPE
BT BATHTUB
BTU BRITISH THERMAL UNIT
BTUH BRITISH THERMAL UNIT PER HOUR

C CELSIUS
CI CAST IRON
CO CLEANOUT

DCW DOMESTIC COLD WATER
DHW DOMESTIC HOT WATER
DHWR DOMESTIC HOT WATER RETURN
DN DOWN
DOE DEPARTMENT OF ENERGY
DS DOWNSPOUT
DWG DRAWING
DWH DOMESTIC WATER HEATER
DWV DRAIN WASTE VENT

EL ELEVATION
EMCS ENERGY MONOSERRAT AND CENTRAL SYSTEM
EPA ENVIROMENTAL PROTECTION AGENCY
EPACT ENERGY POLICY ACT
ESC ESCUTCHEON
ET EXPANSION TANK
EWC ELECTRIC WATER COOLER

F FAHRENHEIT
FCO FLOOR CLEANOUT
FD FLOOR DRAIN
FDC FIRE DEPARTMENT (HOSE) CONNECTION
FM FLOW METER
FS FLOOR SINK
FS FLOW SWITCH
FU FIXTURE UNITS

GAL GALLON
GCO GRADE CLEANOUTS
GPD GALLONS PER DAY
GPH GALLONS PER HOUR
GPM GALLONS PER MINUTE
GPR GAS PRESSURE REGULATOR
GWH GAS FIRED WATER HEATER

H&CW HOT AND COLD WATER
HB HOSE BIBB
HD HUB DRAIN
HP HORSEPOWER
HST HOT WATER STORAGE TANK (DOMESTIC)
HWCP HOT WATER CIRCULATING PUMP
HYD HYDRANT

INV INVERT
IPC INTERNATIONAL PLUMBING CODE
IW INDIRECT WASTE

KW KILOWATT
KWHR KILOWATT-HOUR

LAV LAVATORY

M METER
MBH 1000 BTUH
MER MECHANICAL EQUIPMENT ROOM
MH MANHOLE
MOU MEMORANDUM OF UNDERSTADING
MSB MOP SERVICE BASIN

NC NORMALLY CLOSED
NG NATURAL GAS
NIC NOT IN CONTRACT
NO NORMALLY OPEN
NOM NOMINAL
NPW NON POTABLE WATER
NTC NOT TO SCALE

OC ON CENTER
OD OUTSIDE DIAMETER
OFD OVERFLOW DRAIN
OVFL OVERFLOW

PA PASCAL
PD PRESSURE DROP OR DIFFERENCE
PDI PLUMBING AND DRAINAGE INSTITUTE
PG PRESSURE GAGE
PSI POUNDS PER SQUARE INCH
PSIA POUNDS PER SQUARE INCH ATMOSPHERE
PSIG POUNDS PER SQUARE INCH GAUGE
PTRV PRESSURE TEMPERATURE RELIEF VALVE

RD ROOF DRAIN
RWL RAIN WATER LEADER

SAN SANITARY SEWER
SMACNA SHEET METAL AND AIR CONDITIONING CONTRACTORS NATIONAL ASSOCIATION
SCFM STANDARD CUBIC FOOT/MINUTE
SPR SPRINKLER LINE
SQFT SQUARE FEET

TD TEMPERATURE DIFFERENCE
TD TRENCH DRAIN
TEMP TEMPERATURE
TMV THERMOSTATIC MIXING VALVE
TP TRAP PRIMER
TSTAT THERMOSTAT
TYP TYPICAL

UPC UNIFORM PLUMBING CODE

V VENT
VB VACUUM BREAKER
VTR VENT THROUGH ROOF

W WASTE
WC WATER CLOSET
WCO WALL CLEANOUT
WG WATER GAGE
WH WALL HYDRANT
WH WATER HEATER
WHA WATER HAMMER ARRESTER
WL WATER LINE
WM WATER METER
WPD WATER PRESSURE DROP
WS WASTE STACK

YCO YARD CLEANOUT
YH YARD HYDRANT

GENERAL PLUMBING SYMBOLS

DIRECTION OF PIPE PITCH (DOWN)
DIRECTION OF FLOW
ANCHOR
REDUCER OR INCREASER
ECCENTRIC REDUCER
TOP CONNECTION, 45° OR 90°
BOTTOM CONNECTION, 45° OR 90°
SIDE CONNECTION
CAPPED OUTLET
RISE OR DROP IN PIPE
UNION
PIPE UP
PIPE DOWN
POINT OF CONNECTION BETWEEN NEW AND EXISTING WORK
LIMIT OF DEMOLITION
INVERTED BUCKET TRAP SET INCLUDING PIPING ACCESSORIES
FLOAT & THERMOSTATIC TRAP SET INCLUDING PIPING ACCESSORIES
STRAINER
THERMOMETER
PRESSURE GAGE
FE FLOW ELEMENT
CO CLEAN OUT
HOSE BIB

PLUMBING PIPING SYMBOLS

DOMESTIC COLD WATER, COLD WATER
DOMESTIC HOT WATER, HOT WATER
DOMESTIC HOW WATER RETURN, HOT WATER RETURN
D DRAIN
SAN SANITARY SEWER
SS SANITARY SEWER (OPTIONAL)
SAN SANITARY SEWER, BELOW GRADE
SD STORM WATER
SD STORM WATER, BELOW GRADE

PLUMBING VALVE SYMBOLS

GATE VALVE
GLOBE VALVE
GATE VALVE WITH 3/4 " HOSE ADAPTER
CHECK VALVE
ANGLE GLOBE VALVE
BUTTERFLY VALVE
BALL VALVE
MODULATING CONTROL VALVE
TWO POSITION CONTROL VALVE
THREE-WAY MODULATING CONTROL VALVE
THREE-WAY TWO POSITION CONTROL VALVE
PRESSURE REGULATING VALVE
AUTOMATIC FLOW CONTROL VALVE
PRESSURE RELIEF VALVE
MANUAL AIR VENT
TEST PLUG (PRESSURE/TEMPERATURE)
AV AUTOMATIC AIR VENT

DRAWING SYMBOLS

2 / R106 — DETAIL NUMBER; DRAWING NUMBER WHERE DRAWN
A / R106 — SECTION LETTER; DRAWING NUMBER WHERE SHOWN
2B – P 3 — BUILDING NO. WHERE EQUIPMENT IS LOCATED; EQUIPMENT ABBREVIATION (PUMP); PUMP NO.3 IN BUILDING NO.26; TYPICAL UNIT NO.

FIXTURE UNIT VALUE (2012 IPC)

FIXTURE	W/V TABLE 709.1	TOTAL CW TABLE E103.3(2)	CW (3/4 OF TOTAL CW)	HW (3/4 OF TOTAL CW)
HOSE BIBB/ WALL HYDRANT	-	-	-	-
KITCHEN SINK/ SINK	2	1.4	1.0	1.0
ELECTRIC WATER COOLER/ DRINKING FOUNTAIN	0.5	0.25	-	-

GENERAL NOTES

1. ENTIRE INSTALLATION SHALL CONFORM TO THE REQUIREMENTS OF THE INTERNATIONAL PLUMBING CODE (IPC), INTERNATIONAL BUILDING CODE (IBC), NATIONAL FIRE PROTECTION CODES, AND ALL OTHER APPLICABLE CODES AND REGULATIONS.
2. COORDINATE PLUMBING SYSTEMS WITH WORK OF OTHER TRADES PRIOR TO ANY FABRICATION OR INSTALLATION. PROVIDE ALL FITTINGS, OFFSETS AND TRANSITIONS AS REQUIRED FOR A COMPLETE WORKABLE INSTALLATION.
3. COORDINATE LOCATIONS OF ALL FLOOR OPENINGS WITH STRUCTURAL, MECHANICAL AND ARCHITECTURAL PLANS PRIOR TO ANY INSTALLATION.
4. PLATFORMS, CURBS AND FLASHINGS FOR PLUMBING EQUIPMENT SHALL BE AS INDICATED ON THE STRUCTURAL AND ARCHITECTURAL PLANS, UNLESS NOTED OTHERWISE. COORDINATE EXACT SIZES OF REQUIRED OPENINGS AND SUPPORTS FOR FURNISHED EQUIPMENT.
5. ALL EQUIPMENT SHALL BE INSTALLED IN STRICT ACCORDANCE WITH THE EQUIPMENT MANUFACTURER'S RECOMMENDATIONS AND APPLICABLE CODES. PROVIDE ALL FITTINGS, TRANSITIONS, VALVES AND OTHER DEVICES REQUIRED FOR A COMPLETE WORKABLE INSTALLATION.
6. MAINTENANCE LABEL SHALL BE AFFIXED TO ALL PLUMBING EQUIPMENT AND A MAINTENANCE MANUAL SHALL BE PROVIDED TO VA AUTHORITIES.
7. HOUSEKEEPING PADS SHALL BE 4 INCHES HIGH WITH A MINIMUM OF 6 INCHES BEYOND EQUIPMENT (INTERIOR ONLY). WHERE REQUIRED, BEAM PENETRATIONS SHALL BE ALLOWED FOLLOWING COORDINATION WITH VA AUTHORITIES.
8. SELECT CIRCUIT SETTINGS, AUTOMATIC FLOW CONTROL VALVES AND CONTROL VALVES BASED ON ACTUAL WATER FLOW AND PRESSURE DROP. PROVIDE STRAIGHT INLET AND
9. OUTLET PIPING PER MANUFACTURER'S INSTRUCTIONS.
10. INSTALL ONLY APPROVED BACKFLOW PREVENTION ASSEMBLIES LISTED IN THE CALIFORNIA CODE OF REGULATIONS LATEST EDITION. INSTALL BACKFLOW PREVENTION ASSEMBLIES NOT MORE THAN 5 FEET ABOVE FINISHED FLOOR AND SHALL BE ACCESSIBLE.
11. PROVIDE AND INSTALL WATER HAMMER ARRESTORS ON WATER BRANCH PIPING SERVING FIXTURES WITH FLUSH VALVES OR PRIOR TO ANY QUICK CLOSING DEVICE. PLACEMENT AND SIZING OF ARRESTORS SHALL BE IN ACCORDANCE WITH PDI STANDARD WH-201.
12. INSTALL SWING CHECK VALVES IN THE HORIZONTAL POSITION.
13. PROVIDE UNIONS OR FLANGES ON EACH SIDE OF CONTROL VALVES AND PUMPS. EVERY PIPING ASSEMBY SHALL BE MADE SO AS TO MAKE EVERY VALVE AND PIECE OF EQUIPMENT EASILY REMOVABLE.
14. ALL DRAIN CONNECTIONS FROM MECHANICAL EQUIPMENT SHALL BE PIPED TO SPILL DIRECTILY INTO NEAREST FLOOR DRAIN OR FLOOR SINK OR ROOF RECEPTOR UNLESS OTHERWISE INDICATED.
15. PROVIDE 1" AIR GAP AT ALL DRAIN CONNECTIONS.
16. PROVIDE DRAIN VALVES WITH HOSE CONNECTIONS AT ALL LOW POINTS. ACCESSIBLE IN PIPING WHERE PIPING SECTIONS ARE ISOLATED.
17. SEE ARCHITECTURAL DOCUMENTS FOR PAINTING OF ALL EXPOSED PIPING.
18. INSTALL SHUT-OFF VALVES AT EACH BRANCH PIPE LINE TO CORE RESTROOMS. PROVIDE ACCESS PANELS.
19. ALL PIPING NOTED TO BE CAPPED FOR FUTURE EXTENSION SHALL BE PROVIDED WITH VALVE NEAR CAP TO PERMIT FUTURE CONNECTION OF THE SYSTEM IF SHOWN ON PLANS OR NOT.
20. ACOUSTICAL SEALING THRU WALL PENETRATIONS SHALL BE PROVIDED IN ACCORDANCE WITH ARCHITECTURAL SPECIFICATIONS.
21. PROVIDE CLEANOUTS PER IPC 708.
22. HANG AND BRACE ALL PIPES PER SPEC 13541. HANGING AND BRACING FROM THE ROOF DECK IS PROHIBITED. PROVIDE SUPPLEMENTAL FRAMING AS NEEDED TO SUPPORT UTILITIES.
23. THE HOT WATER TEMPERATURE AND TIME TO REACH EACH FIXTURE SHALL BE 100 DEGREE F IN 30 SECONDS NOT TO EXCEED 110 DEGREES F.

FIRE PROTECTION GENERAL NOTES

1. THE AUTOMATIC SPRINKLER SYSTEM IS A DEFERRED-APPROVAL ITEM. AS THE BUILDING IS CONSTRUCTED PROVIDE FIRE PROTECTION DURING CONSTRUCTION. APPROVAL OF DEFERRED ITEMS SHALL BE OBTAINED BEFORE BUILDING CONSTRUCTION BEGINS.
2. THE AUTOMATIC SPRINKLER SYSTEM SHALL CONFORM TO THE REQUIREMENTS OF THE 2013 EDITION OF THE NFPA 13, AND FIRE SUPPRESSION SPECIFICATIONS SECTIONS 21 05 11 & 21 13 13. PENETRATIONS OF RATED ASSEMBLIES SHALL BE FIRE-STOPPING. FIRE-STOPPING SHALL BE AN APPROVED MATERIAL. INSTALLATION OF FIRE PROTECTION SYSTEM SHALL NOT BE STARTED UNTIL COMPLETE PLANS AND SPECIFICATIONS (INCLUDING WATER SUPPLY INFORMATION) HAVE BEEN APPROVED BY THE AUTHORITY HAVING JURISDICTION. AT VARIOUS STAGES AND UPON COMPLETION, THE SYSTEM MUST BE TESTED IN THE PRESENCE OF THE ENFORCING AGENCY.
3. COORDINATE LOCATIONS OF ALL SPRINKLER HEADS WITH THE ARCHITECTURAL REFLECTED CEILING PLANS AND ELECTRICAL LIGHTING LAYOUT. PRIOR TO FABRICATION, SUBMIT LAYOUT DRAWINGS FOR ARCHITECTURAL ACCEPTANCE. COORDINATE LOCATIONS OF ALL SPRINKLER MAINS, BRANCH PIPING, ETC. WITH OTHER TRADES.
4. PLUMBING DRAWINGS ARE DIAGRAMMATIC SHOWING APPROXIMATE COMPONENT AND MAIN PIPE LOCATIONS ONLY. DRAWINGS DO NOT SHOW ALL OFFSETS OR FITTINGS REQUIRED. THE FIRE SPRINKLER CONTRACTOR IS TO COORDINATE WITH ALL OTHER TRADES TO AVOID CONFLICTS WITH DUCTS, LIGHTS, FIXTURES, PIPING, ETC.
5. THE SPACING AND DETAILS OF THE SUPPORT AND BRACING OF THE FIRE SPRINKLER PIPING SHALL COMPLY WITH THE 2013 EDITION OF NFPA 13. PROVIDE ANCHORAGE DETAILS AND CALCULATIONS FOR THE CONNECTION OF SWAY BRACING TO THE STRUCTURE. DESIGN LOADS FOR THE ANCHORAGE MAY BE COMPUTED PER NFPA 13, 2013 EDITION. ALL SHOP DRAWINGS OF THE SPRINKLER SYSTEM SHALL BE SUBMITTED TO THE AUTHORITY HAVING JURISDICTION FOR REVIEW AND APPROVAL, PRIOR TO INSTALLATION. SPRINKLER HEADS SHALL BE QUICK RESPONSE TYPE.

PLUMBING SHEET INDEX - PHARMACY

Sheet Number	Sheet Name	Scale
360-J PL001	GENERAL NOTES, ABBREVIATIONS, SYMBOLS AND SHEET INDEX - PHARMACY	NTS
360-J PL201	PLUMBING SUPPLY DISTRIBUTION PLAN - PHARMACY	1/4" = 1' - 0"
360-J PL202	PLUMBING WASTE, DRAIN AND VENT PIPING PLAN - PHARMACY	1/4" = 1' - 0"
360-J PL203	PLUMBING ROOF PLAN - PHARMACY	1/4" = 1' - 0"
360-J PL301	PLUMBING STANDARD SCHEDULE AND RISER DIAGRAMS	NTS
360-J PL401	PLUMBING DETAILS	NTS

100% CD/BID SUBMISSION
FEBRUARY 2, 2016

Revisions:	Date
65% CD SUBMISSION	03/16/15
100% CD/BID SUBMISSION	02/02/16

CONSULTANTS:

MAZZETTI
220 Montgomery Street, Suite 650
San Francisco, CA 94104
TEL: 415.632.3266
www.mazzetti.com
PROJECT NUMBER: 130-085

REGISTERED PROFESSIONAL ENGINEER — JOHN M. GRAY — No. M22336 — EXP. 12/31/15 — MECHANICAL — STATE OF CALIFORNIA

ARCHITECT

POLYTECH ASSOCIATES INC
POLYTECH ASSOCIATES INC.
235 Pine Street, 17th Floor
San Francisco, CA 94104
TEL (415) 397-3117
FAX (415) 397-1517

Drawing Title: GENERAL NOTES, ABBREVIATIONS, SYMBOLS AND SHEET INDEX - PHARMACY

Approved: Project Director

Project Title: POST TRAUMATIC STRESS DIAGNOSIS (PTSD) EXPANSION AND RENOVATION

Location: 795 WILLOW ROAD, MENLO PARK, CA

Date: 01/13/15 | Checked: RV | Drawn: GL

Project Number: 612-125

Building Number: Building 360

Drawing Number: 360-J PL001

Office of Construction and Facilities Management

Department of Veterans Affairs

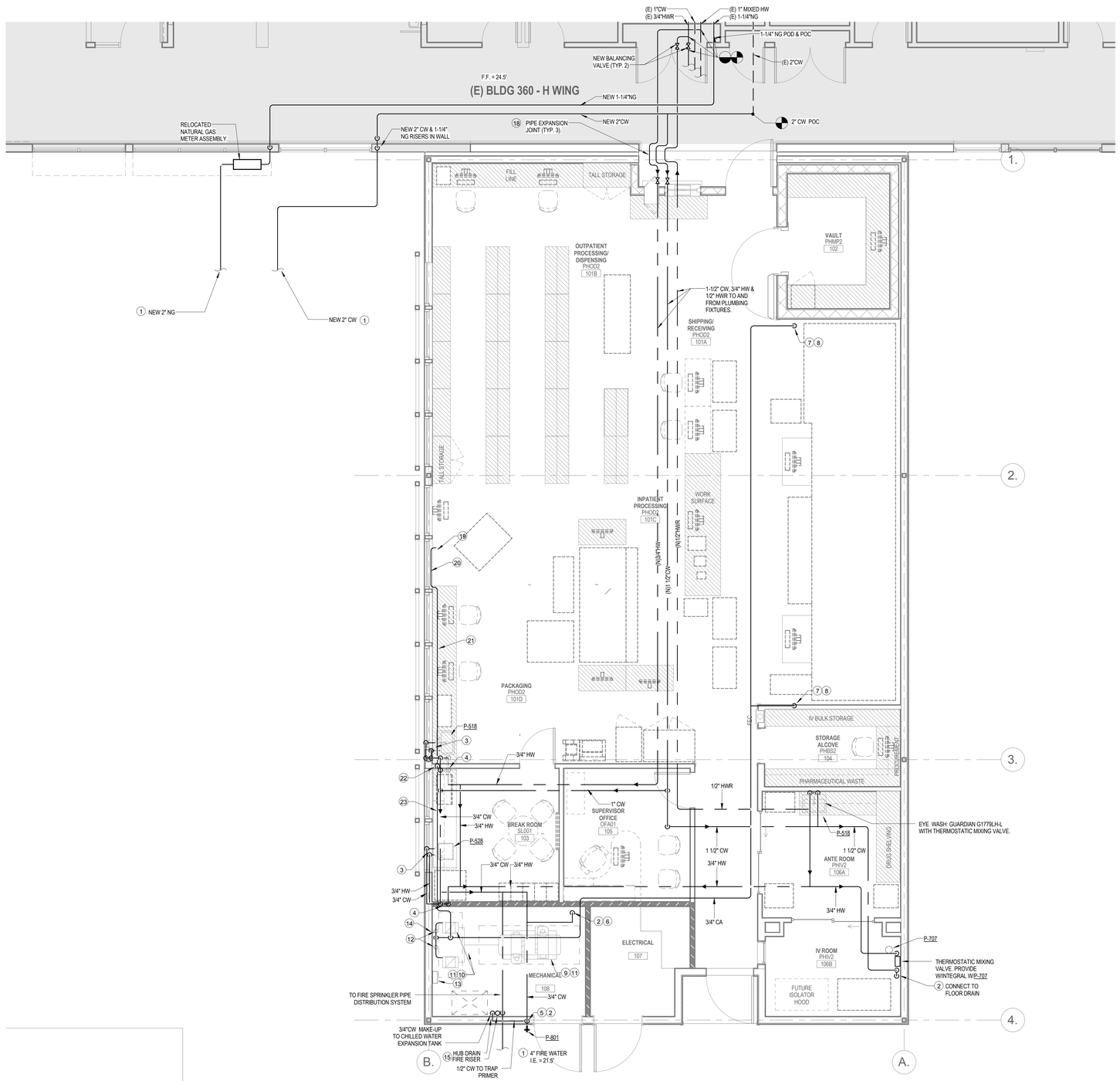

1 PLUMBING PHARMACY FIRST FLOOR SUPPLY DIST.
1/4" = 1'-0"

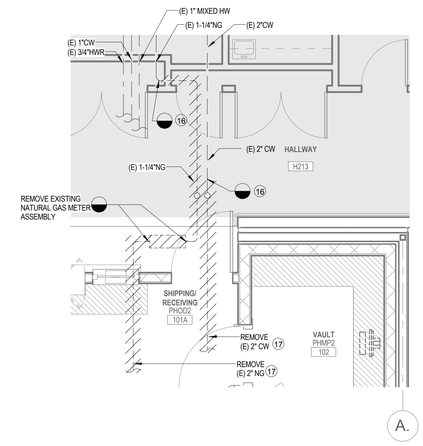

2 PLUMBING PHARMACY PARTIAL FIRST FLOOR SUPPLY DIST. - DEMO
1/4" = 1'-0"

N
TRUE NORTH

SHEET NOTES

1. ALL PIPING SHALL BE ABOVE CEILING, WITHIN WALLS OR BELOW SLAB/FLOOR UNLESS NOTED OTHERWISE.

KEY NOTES

1. SEE CIVIL DRAWING 360-J CS501 FOR CONTINUATION. SIZE AS NOTED.
2. 1/2" CW DN TO ELECTRONIC TRAP PRIMER (115V/1PH/60HV) FOR DRAIN TRAP SEAL PROTECTION.
3. 1/2" CW & HW PIPING IN WALL BELOW WINDOW.
4. 1/2" CW & HW PIPING DOWN IN WALL.
5. CONNECT TO HUB DRAIN TAIL PIECE.
6. CONNECT FOR FLOOR SINK.
7. 3/4" COMPRESSED AIR DROP.
8. FURNISH AND INSTALL 3/4" VALVE FOR CONNECTION AB 180 PACKAGER. PROVIDE PRESSURE GAGE AND 1/2" NPT AND MOVE CONNECTOR. FINAL CONNECTION BY EQUIPMENT INSTALLER. MOUNT VALVE 36" ABOVE FINISH FLOOR.
9. AIR COMPRESSOR, OWNER FURNISHED, CONTRACTOR INSTALLED. 2x 5 HP, 208V/3PH/60HZ.
10. AIR DRYER OWNER FURNISHED, CONTRACTOR INSTALLED. 115V/1PH/60HZ, 2.63 RLA, 17.5 LRA.
11. PROVIDE DRAIN PIPE CONNECTION TO FLOOR SINK. SEE 360-I PL3.
12. ALL FILTER, OWNER FURNISHED CONTRACTOR INSTALLED.
13. NEMA 4X ENCLOSURE FOR PRESSURE SWITCH. OWNER FURNISHED CONTRACTOR INSTALLED. SEE NOTE #14.
14. LOCATE OWNER FURNISHED CONTRACTOR INSTALLED PRESSURE SWITCH ON 3/4" RISER.
15. REFER TO DETAILS 1 & 2 / 360-J PL401
16. DEMO ALL PIPING BEYOND THIS POINT.
17. SEE CIVIL DRAWING 360-J CS102 FOR EXISTING CONDITIONS. SIZE AS NOTED.
18. PROVIDE EXPANSION JOINT TO ALLOW 4" MOVEMENT APART AND 4" MOVEMENT TOGETHER FOR A TOTAL OF 8" MOVEMENT. SUBMIT CALCULATIONS AND SHOP DRAWING SIGNED BY A CALIFORNIA STATE REGISTERED STRUCTURAL ENGINEER FOR APPROVAL.
19. 3/4" CA - PROVIDE PRV, PRESSURE GAUGE, SOV AND QUICK DISCONNECT COUPLER. MAKE FINAL CONNECTION TO EQUIP. WITH OWNER PROVIDED FLEX HOSE. SET AT 80 PSI.
20. ROUTE CA PIPING IN WALL.
21. ROUTE CA PIPING BELOW COUNTER, MOUNTED ON WALL OR IN CABINET SPACE.
22. 3/4" CA DROP IN WALL.
23. 3/4" CA - ROUTE ABOVE CEILING.

100% CD/BID SUBMISSION
FEBRUARY 2, 2016

Revisions:	Date
65% CD SUBMISSION	03/16/15
100% CD/BID SUBMISSION	02/02/16

CONSULTANTS:

MAZZETTI
220 Montgomery Street, Suite 650
San Francisco, CA 94104
TEL: 415.632.3266
www.mazzetti.com
PROJECT NUMBER: 130-085

REGISTERED PROFESSIONAL ENGINEER
JACK M. RAPPAPORT
No. M22336
EXP. 12/31/15
MECHANICAL
STATE OF CALIFORNIA

ARCHITECT

POLYTECH ASSOCIATES INC

POLYTECH ASSOCIATES INC.
235 Pine Street, 17th Floor
San Francisco, CA 94104
TEL (415) 397-3117
FAX (415) 397-1517

Drawing Title: PLUMBING SUPPLY DISTRIBUTION PLAN - PHARMACY	Project Title: POST TRAUMATIC STRESS DIAGNOSIS (PTSD) EXPANSION AND RENOVATION		Project Number: 612-125
			Building Number: Building 360
Approved: Project Director	Location: 795 WILLOW ROAD, MENLO PARK, CA		Drawing Number: 360-J PL201
	Date: 10/20/14	Checked: RV	Drawn: GL

Office of Construction and Facilities Management

Department of Veterans Affairs

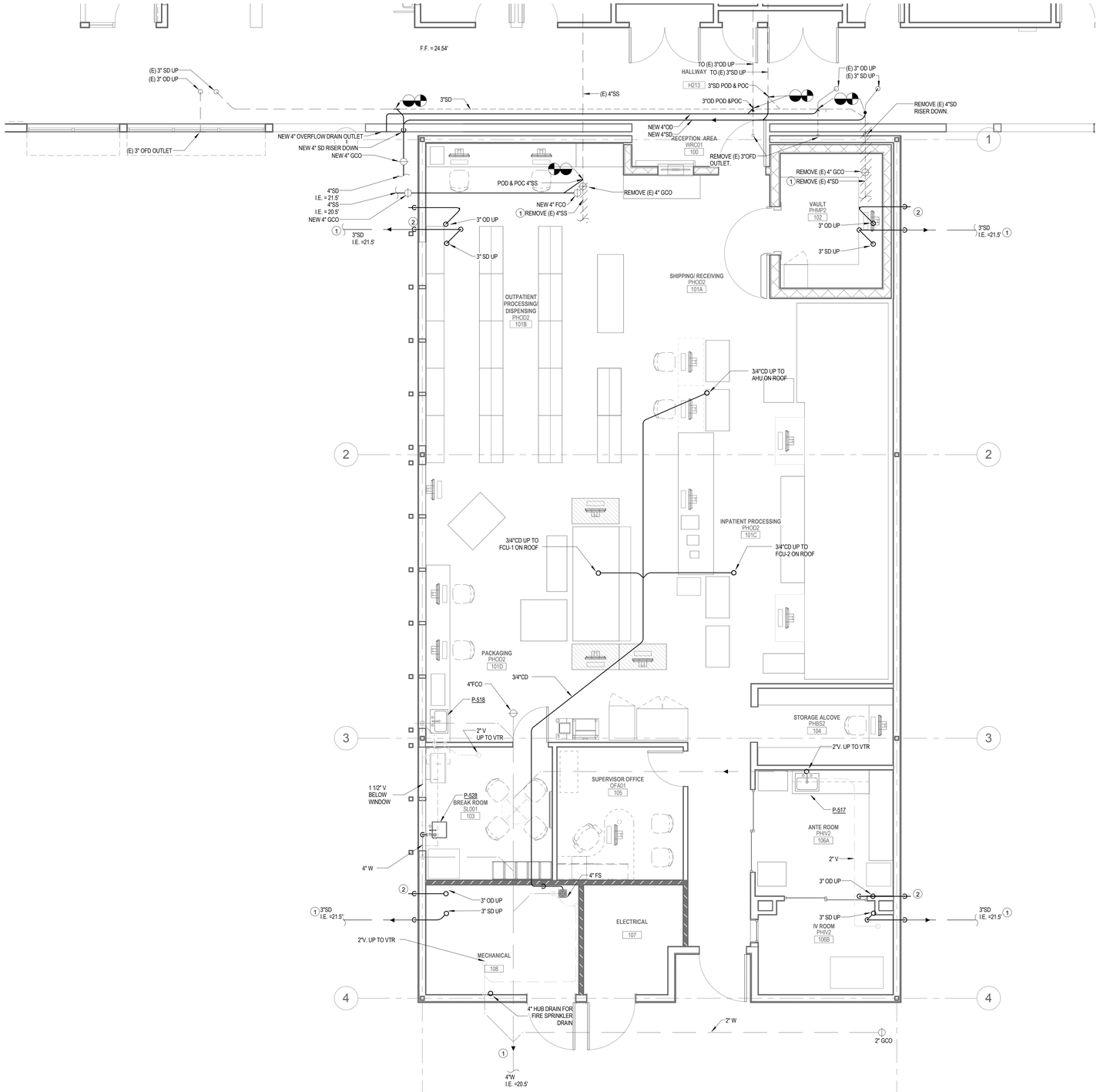

1 PLUMBING PHARMACY FIRST FLOOR WASTE & VENT
1/4" = 1'-0"

N
TRUE NORTH

SHEET NOTES

1. PROVIDE CONDENSATE DRAINAGE PIPING FROM FAN COIL UNITS (SEE MECHANICAL PLAN MH6) TO TERMINATE FLOOR SINK IN MECHANICAL 108.
2. ALL DASHED LINES ARE TO BE REMOVED.
3. ALL PIPING SHALL BE ABOVE CEILING, WITHIN WALLS OR BELOW SLAB/FLOOR UNLESS NOTED OTHERWISE.

KEY NOTES

1 SEE CIVIL DRAWING 2CS101 FOR CONTINUATION. SIZE AS NOTED.

2 3" OD, TERMINATE ABOVE SPLASH BLOCK.

100% CD/BID SUBMISSION
FEBRUARY 2, 2016

Revisions:	Date
65% CD SUBMISSION	03/16/15
100% CD/BID SUBMISSION	02/02/16

CONSULTANTS:

MAZZETTI
220 Montgomery Street, Suite 650
San Francisco, CA 94104
TEL: 415.632.3266
www.mazzetti.com

PROJECT NUMBER: 130-085

REGISTERED PROFESSIONAL ENGINEER
Jeffrey M. Mazzetti
No. M22336
EXP. 12/31/15
MECHANICAL
STATE OF CALIFORNIA

ARCHITECT

POLYTECH ASSOCIATES INC

POLYTECH ASSOCIATES INC.
235 Pine Street, 17th Floor
San Francisco, CA 94104
TEL (415) 397-3117
FAX (415) 397-1517

Drawing Title: PLUMBING WASTE, DRAIN AND VENT PIPING PLAN - PHARMACY

Approved: Project Director

Project Title: POST TRAUMATIC STRESS DIAGNOSIS (PTSD) EXPANSION AND RENOVATION

Location: 795 WILLOW ROAD, MENLO PARK, CA

Date	Checked	Drawn
10/20/14	RV	GL

Project Number: 612-125

Building Number: Building 360

Drawing Number: 360-J PL202

Office of Construction and Facilities Management

Department of Veterans Affairs

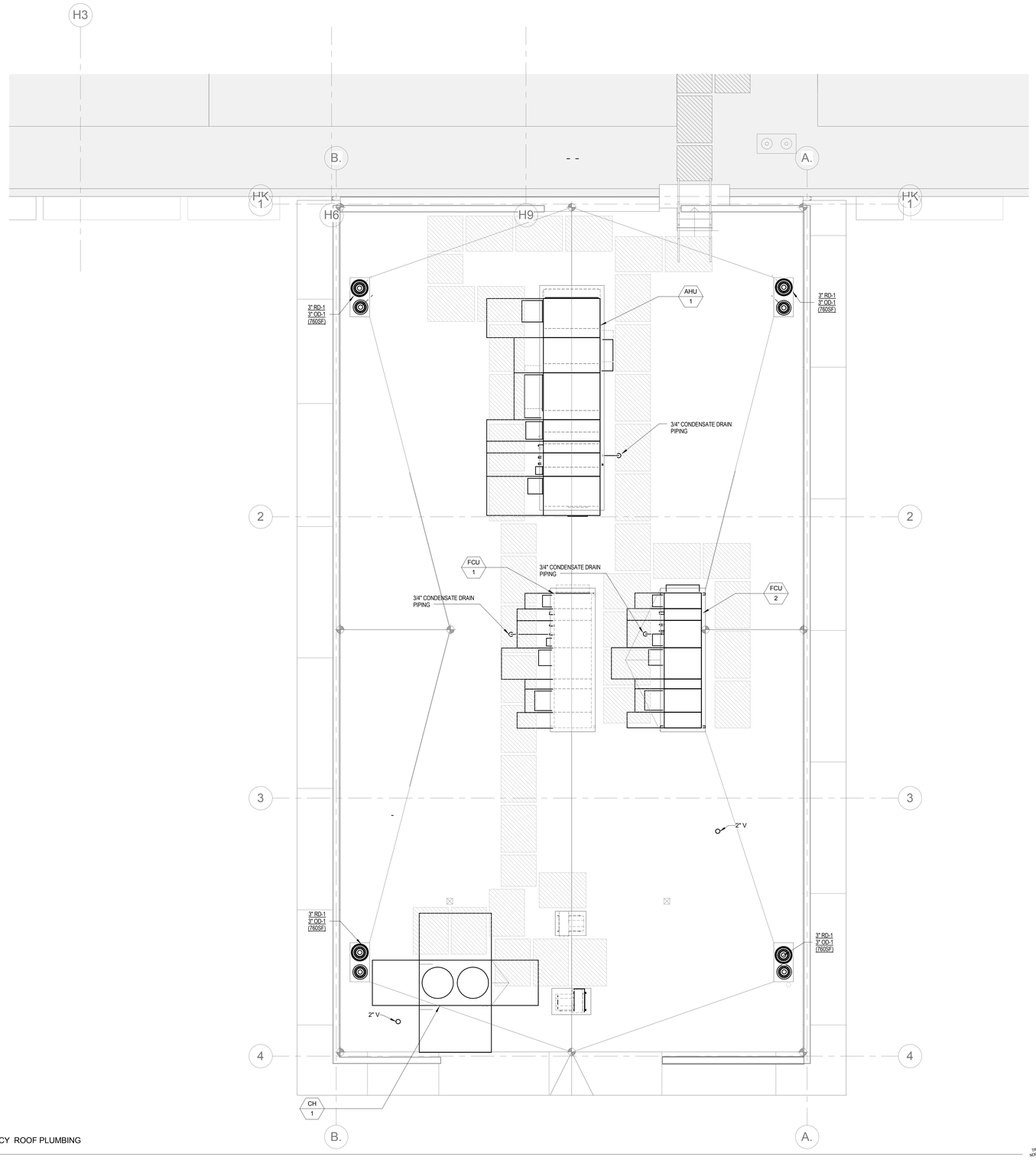

1 PLUMBING PHARMACY ROOF PLUMBING PLAN
1/4" = 1'-0"

N
TRUE NORTH

SHEET NOTES

KEY NOTES

100% CD/BID SUBMISSION
FEBRUARY 2, 2016

Revisions:	Date
65% CD SUBMISSION	03/16/15
100% CD/BID SUBMISSION	02/02/16

CONSULTANTS:

MAZZETTI
220 Montgomery Street, Suite 650
San Francisco, CA 94104
TEL: 415.632.3266
www.mazzetti.com

PROJECT NUMBER: 130-085

REGISTERED PROFESSIONAL ENGINEER
JOHN M. CHAMBERS
No. M22336
EXP. 12/31/15
MECHANICAL
STATE OF CALIFORNIA

ARCHITECT

POLYTECH ASSOCIATES INC

POLYTECH ASSOCIATES INC.
235 Pine Street, 17th Floor
San Francisco, CA 94104
TEL (415) 397-3117
FAX (415) 397-1517

Drawing Title
PLUMBING ROOF PLAN - PHARMACY

Approved: Project Director

Project Title
POST TRAUMATIC STRESS DIAGNOSIS (PTSD) EXPANSION AND RENOVATION

Location
795 WILLOW ROAD, MENLO PARK, CA

Date	Checked	Drawn
10/22/14	RV	GL

Project Number 612-125

Building Number Building 360

Drawing Number 360-J PL203

Office of Construction and Facilities Management

Department of Veterans Affairs

PLUMBING FIXTURE SCHEDULE

MARK	DESCRIPTION	WASTE PIPE		VENT PIPE		COLD WATER		HOT WATER		WASTE FIXTURE UNITS	WATER FIXTURE UNITS	WRIST BLADE HANDLES	ELECTRIC SENSOR	REMARKS, REFER TO NOTES BELOW
		IN.	[mm]	IN.	[mm]	IN.	[mm]	IN.	[mm]					
P-518	SINK, CRS, ADA	2	[50]	1.5	[36]	0.5	[13]	0.5	[13]	2	2	NO	YES	SINGLE COMPARTMENT, COUNTER TOP, ACCESSIBLE.
P-528	SINK, CRS, ADA	2	[50]	1.5	[36]	0.75	[19]	0.75	[19]	2	2	YES	NO	SINGLE COMPARTMENT, COUNTER TOP, ACCESSIBLE.
P-609	ELECTRIC WATER COOLER, ADA	2	[50]	1.5	[36]	0.5	[13]	-	-	1	1	N/A	NO	HI/LO - DUAL HEIGHT, ACCESSIBLE, 120V/1PH/60HZ.
P-801	WALL HYDRANT	-	-	-	-	0.75	[19]	-	-	-	-	N/A	NO	
P-707	EMERGENCY SHOWER EYE & FACE WASH	-	-	-	-	1.5	[40]	0.75	[19]	-	-	N/A	NO	WITH INTEGRAL THERMOSTATIC MIXING VALVE SET AT 80 DEGREE F

NOTES:

1. PROVIDE ALL REQUIRED FITTINGS AND ACCESSORIES FOR COMPLETE INSTALLATION, INCLUDING SHUT OFFS/STOPS, ESCUTCHEON PLATES, CHROME PLATED BRASS P-TRAPS AND FIXTURE CARRIERS (AND FOR LAVATORIES, GRID STRAINERS, UNLESS NOTED OTHERWISE). FOR MORE INFORMATION, SEE SPECIFICATION SECTION # 22 4000.
2. ALL EXPOSED WASTE AND HOT WATER PIPE AT ADA LAV. OR SINK FIXTURES SHALL BE COVERED WITH PROTECTIVE WRAP, TRUE BRO "LAVSHIELD" OR EQUAL.
3. PLUMBING FIXTURES MUST COMPLY WITH AB1953 - CALIFORNIA LEAD PLUMBING LAW.
4. THE FORCE REQUIRED TO ACTIVATE ACCESSIBLE FAUCET CONTROLS SHALL BE NO GREATER THAN 5 POUNDS.

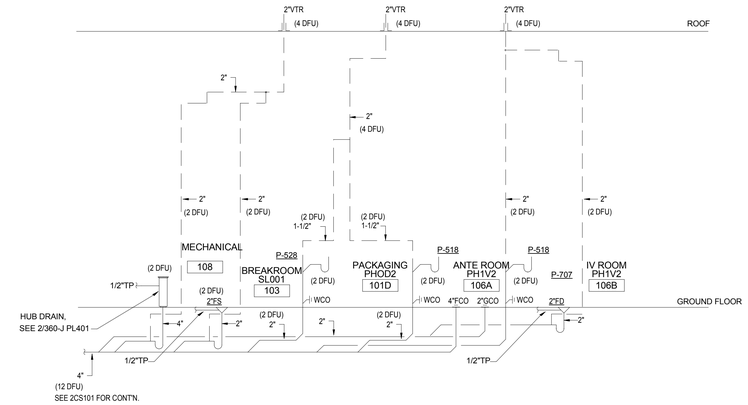

4 360-J PL301 PLUMBING SANITARY RISER DIAGRAM - PHARMACY

SCALE: NOT TO SCALE

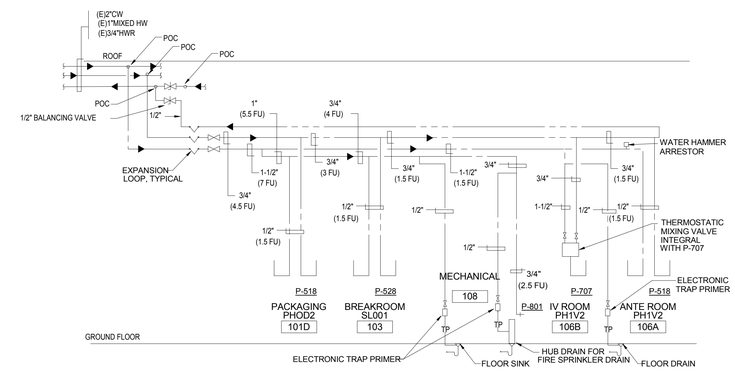

1 360-J PL301 PLUMBING WATER RISER DIAGRAM - PHARMACY

SCALE: NOT TO SCALE

100% CD/BID SUBMISSION
FEBRUARY 2, 2016

Revisions:	Date
65% CD SUBMISSION	03/16/15
100% CD/BID SUBMISSION	02/02/16

CONSULTANTS:

MAZZETTI
220 Montgomery Street, Suite 650
San Francisco, CA 94104
TEL: 415.632.3266
www.mazzetti.com
PROJECT NUMBER: 130-085

ARCHITECT

POLYTECH ASSOCIATES INC.
235 Pine Street, 17th Floor
San Francisco, CA 94104
TEL (415) 397-3117
FAX (415) 397-1517

Drawing Title: PLUMBING STANDARD SCHEDULE AND RISER DIAGRAMS

Approved: Project Director

Project Title: POST TRAUMATIC STRESS DIAGNOSIS (PTSD) EXPANSION AND RENOVATION

Location: 795 WILLOW ROAD, MENLO PARK, CA

Date: 01/13/15 | Checked: RV | Drawn: GL

Project Number: 612-125

Building Number: Building 360

Drawing Number: 360-J PL301

Office of Construction and Facilities Management

Department of Veterans Affairs

ITEM	DESCRIPTION
1	FROM 4" FIRE DEPARTMENT CONNECTION. SEE CIVIL DWG. CS501 FOR CONTINUATION.
2	4" OS&Y VALVE WITH SUPERVISORY SWITCH
3	NOT USED.
4	TO 4" FIRE SPRINKLER SYSTEM
5	FROM 4" FIRE WATER SERVICE. SEE CIVIL DWG. CS501 FOR CONTINUATION.
6	NOT USED.
7	SYSTEM WATER GAUGE AND VALVE
8	ALARM CHECK VALVE
9	MAIN DRAIN VALVE
10	RISER FROM MAIN WATER SUPPLY
11	FLOW TEST LINE

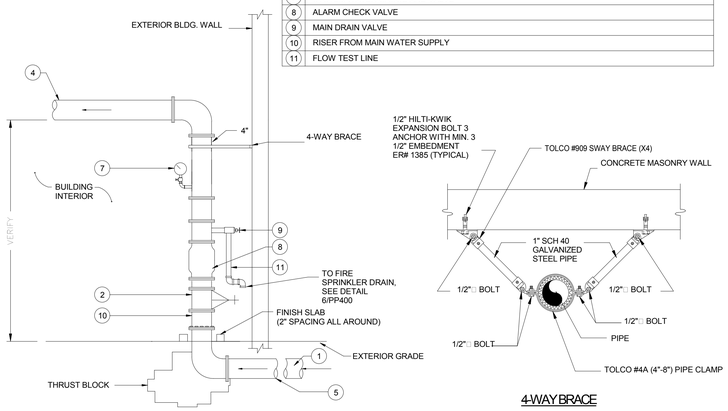

4-WAY BRACE

NOTE: DEFERRED APPROVAL. DIAGRAMS AND PIPE SIZE ARE FOR INFORMATION ONLY. REFER TO SPECIFICATION SECTIONS 21 05 11 & 21 13 13.

1 / 360-J P401 FIRE SPRINKLER RISER DETAIL

SCALE: NOT TO SCALE

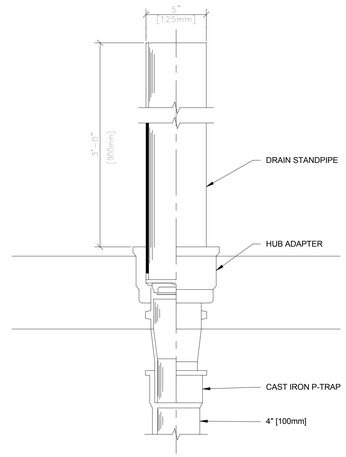

2 / 360-J P401 HUB DRAIN DETAIL (FOR SPRINKLER MAIN DRAIN)

SCALE: NOT TO SCALE

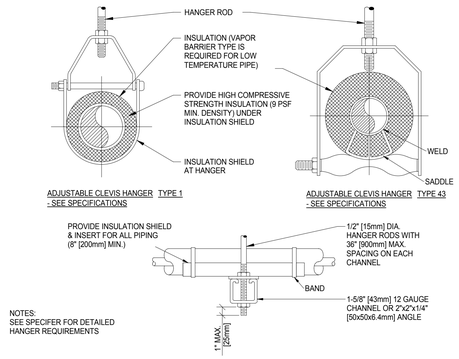

SIDE VIEW TRAPEZE HANGER FOR UP TO 1000 LB. [453KG] UNIFORM LOAD

MAXIMUM PIPE/TUBING SUPPORT SPACING																			
NOM. SIZE	IN. [mm]	THRU 3/4 THRU [20]	1 [25]	1 1/4 [32]	1 1/2 [40]	2 [50]	2 1/2 [65]	3 [75]	4 [100]	5 [125]	6 [150]	8 [200]	10 [250]	12 [300]	14 [350]	16 [400]	18 [450]	20 [500]	24 [600]
PIPE	FT. [mm]	7 [2100]	7 [2100]	7 [2100]	9 [2700]	10 [3000]	11 [3400]	12 [3700]	14 [4100]	16 [4900]	17 [5200]	19 [5800]	22 [6700]	23 [7000]	25 [7600]	27 [8200]	28 [8500]	30 [9100]	32 [9600]
TUBING	FT. [mm]	5 FT [1500]	6 [1800]	7 [2100]	8 [2400]	8 [2400]	9 [2700]	10 [3000]	12 [3700]	13 [4000]	14 [4100]	16 [4900]	- -	- -	- -	- -	- -	- -	- -
NOTE: FOR TRAPEZE HANGER TAKE SPACING OF SMALLEST SIZE ON TRAPEZE.																			

3 / 360-J P401 PIPE HANGERS

SCALE: NOT TO SCALE

100% CD/BID SUBMISSION
FEBRUARY 2, 2016

Revisions:	Date
65% CD SUBMISSION	03/16/15
100% CD/BID SUBMISSION	02/02/16

CONSULTANTS:

MAZZETTI
220 Montgomery Street, Suite 650
San Francisco, CA 94104
TEL: 415.632.3266
www.mazzetti.com

PROJECT NUMBER: 130-085

REGISTERED PROFESSIONAL ENGINEER
Ryan M. Vance
No. M22336
EXP. 12/31/15
MECHANICAL
STATE OF CALIFORNIA

ARCHITECT

POLYTECH ASSOCIATES INC

POLYTECH ASSOCIATES INC.
235 Pine Street, 17th Floor
San Francisco, CA 94104
TEL (415) 397-3117
FAX (415) 397-1517

Drawing Title: PLUMBING DETAILS

Approved: Project Director

Project Title: POST TRAUMATIC STRESS DIAGNOSIS (PTSD) EXPANSION AND RENOVATION

Location: 795 WILLOW ROAD, MENLO PARK, CA

Date: 06/04/15 | Checked: RV | Drawn: GL

Project Number: 612-125

Building Number: Building 360

Drawing Number: 360-J PL401

Office of Construction and Facilities Management

Department of Veterans Affairs