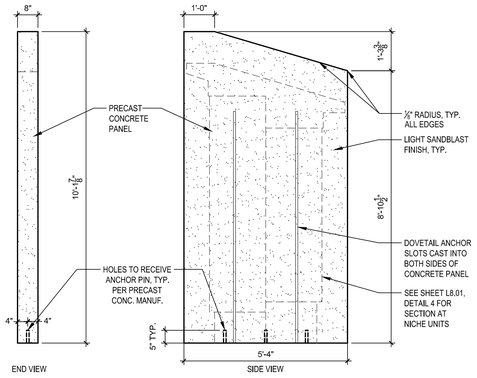

1 L8.04 INTERIOR END PIER PRECAST CONCRETE PANEL
ELEVATIONS 1/2"=1'-0"

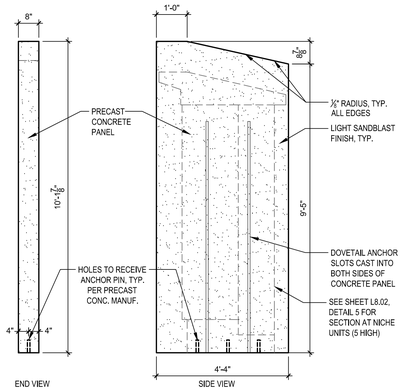

2 L8.04 PERIMETER PRECAST CONCRETE PANEL (5 HIGH)
ELEVATIONS 1/2"=1'-0"

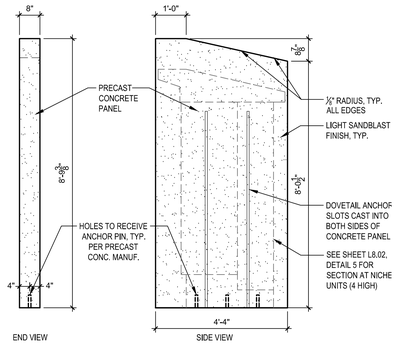

3 L8.04 PERIMETER PRECAST CONCRETE PANEL (4 HIGH)
ELEVATIONS 1/2"=1'-0"

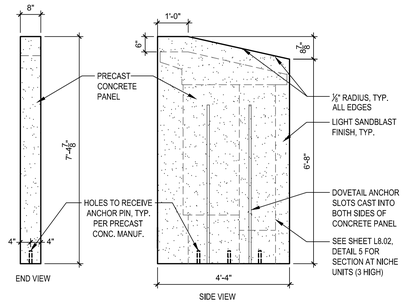

4 L8.04 PERIMETER PRECAST CONCRETE PANEL (3 HIGH)
ELEVATIONS 1/2"=1'-0"

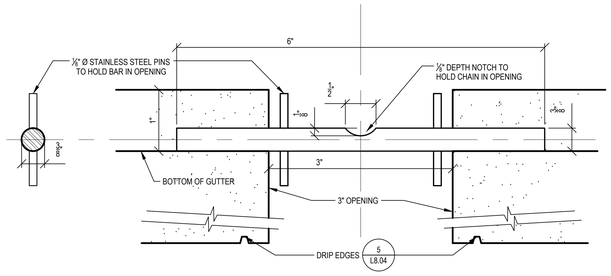

5 L8.04 STAINLESS STEEL BAR AT CHAIN
SECTIONS 1" = 1'-0"

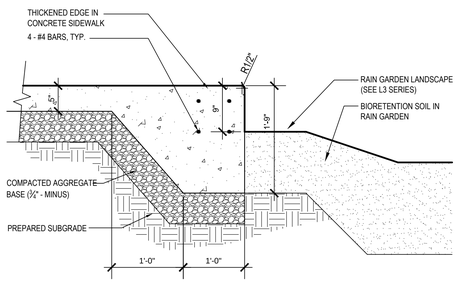

7 L8.04 PLAZA AT RAIN GARDEN EDGE
SECTION 1"=1'-0"

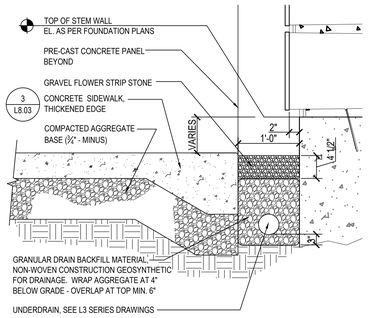

8 L8.04 GRAVEL FLOWER STRIP WITH UNDERDRAIN & SIDEWALK EDGE
SECTION 1"=1'-0"

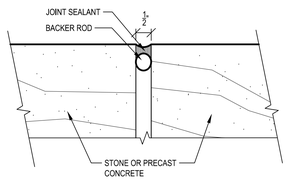

9 L8.04 EXPANSION JOINT IN VERTICAL WALL
SECTION 6"=1'-0"

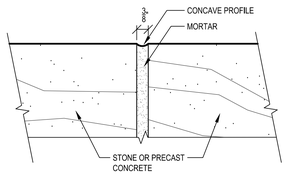

10 L8.04 MORTAR JOINT IN STONE VENEER
SECTION 6"=1'-0"

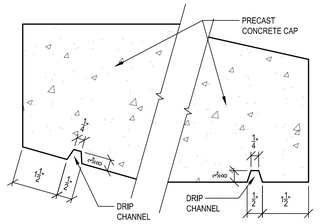

11 L8.04 DRIP EDGE
SECTION 6"=1'-0"

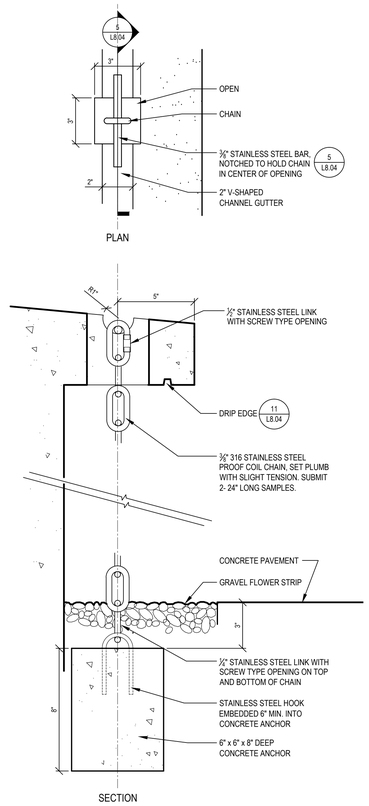

6 L8.04 GUTTER AND DRAIN CHAIN
PLAN AND SECTION 3"=1'-0"

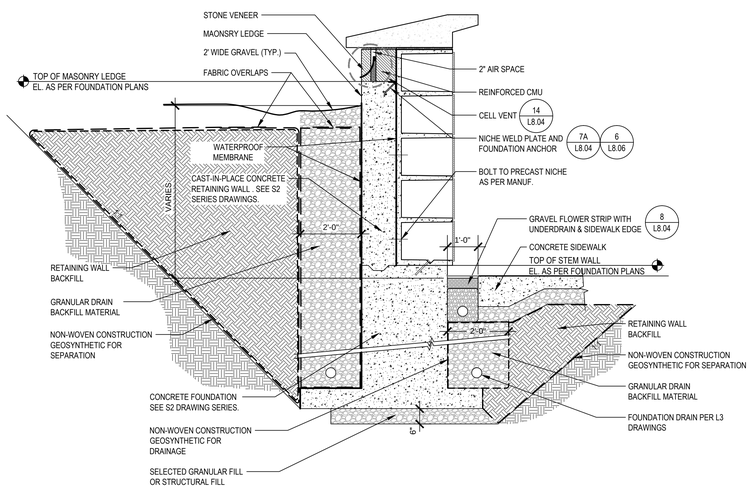

12 L8.04 PERIMETER COLUMBARIUM WALL RETAINING CONDITION
SECTION 1/2"=1'-0"

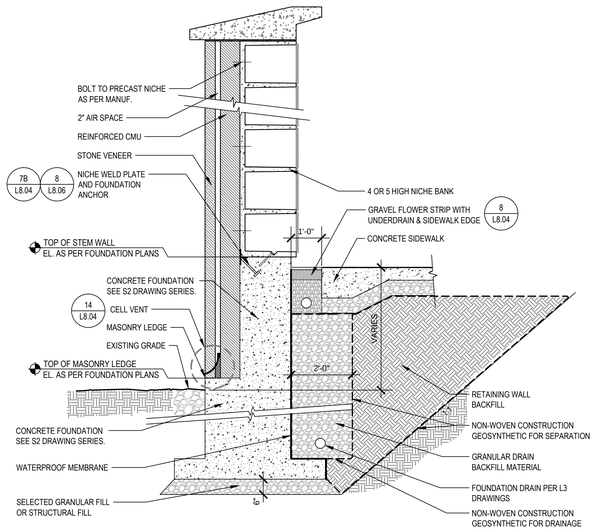

13 L8.04 PERIMETER COLUMBARIUM WALL RETAINING PLAZA CONDITION
SECTION 1/2"=1'-0"

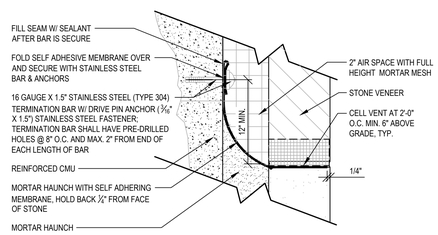

14 L8.04 CELL VENT WITH MORTAR HAUNCH
SECTION 1/2"=1'-0"

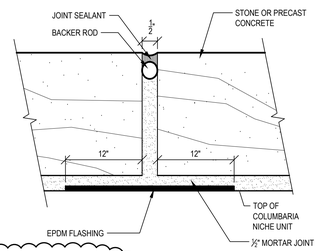

15 L8.04 JOINT IN CAP
SECTION NTS

1

Revisions	Date
Amendment 4 1	11.11.2011

CONSULTANTS:

Anderson Engineering of Minnesota, LLC
13605 1st AVENUE NORTH, SUITE 100, PLYMOUTH, MN 55441
TEL (763) 412-4000 FAX (763) 412-4090

Aqua Engineering, Inc.
Innovative Water Solutions
4803 Innovation Drive
Fort Collins, Colorado 80525
Phone (970) 229-9668
FAX (970) 226-3855

JJR, LLC
110 MILLER AVENUE,
ANN ARBOR, MICHIGAN 48104
734.662.4457 T 734.662.0779 F
www.jjr-us.com

RUSHING Engineering–Essentials–Delivery
BLACKBIRD
ALLEGIANCE GROUP, LLC

STATE OF MICHIGAN HENRY I. NYMA LANDSCAPE ARCHITECT No. 1535 REGISTERED LANDSCAPE ARCHITECT

ARCHITECT/ENGINEERS:

kpff Consulting Engineers
1601 Fifth Avenue, Suite 1600
Seattle, Washington 98101-3665
(206) 622-5822 Fax (206) 622-8130

Drawing Title: COMMON COLUMBARIA DETAILS

Approved: Project Director

Project Title: TAHOMA NATIONAL CEMETERY PHASE 2 GRAVESITE DEVELOPMENT
18600 SE 240TH STREET, KENT WASHINGTON

Location: KENT, WASHINGTON

Date	Checked	Drawn
9-15-2011	CQ/PE	JS/JM

Project Number: 919PC2007

Drawing Reference Number: 139

Drawing Number: L8.04

Office of Construction and Facilities Management
Department of Veterans Affairs

VA FORM 08-6231

Nov 10, 2011 - 9:56am jsierocki
Xref Filename: \\va-ttet\projects\50277\000\Admin\Const Admin\CA41\Tahoma NC constr record set\Sheet\50277-C01L-DETL.dwg
one eighth inch = one foot one quarter inch = one foot three eighths inch = one foot one half inch = one foot three quarters inch = one foot one inch = one foot one and one half inches = one foot three inches = one foot