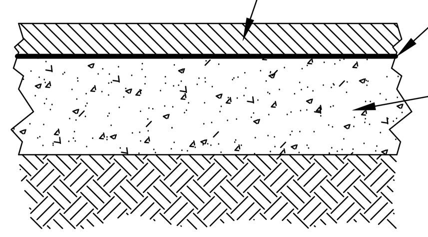

NOTES:
1. SEAL CRACKS GREATER THAN 1/4" WIDE IN EXISTING CONCRETE WITH HOT POURED RUBBERIZED ASPHALT.
2. SEE GEOTECHNICAL REPORT FOR PROOF-ROLL REQUIREMENTS.

A1 ASPHALT PAVEMENT OVERLAY DETAIL

NOT TO SCALE

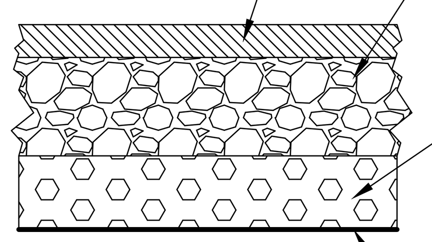

B1 ASPHALT PAVEMENT SECTION

NOT TO SCALE

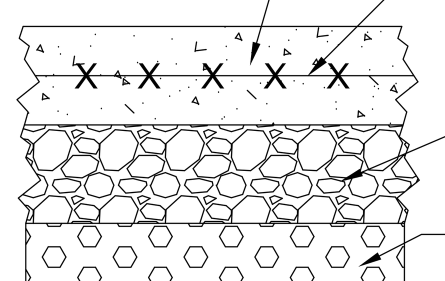

D1 CONCRETE PAVEMENT SECTION

NOT TO SCALE

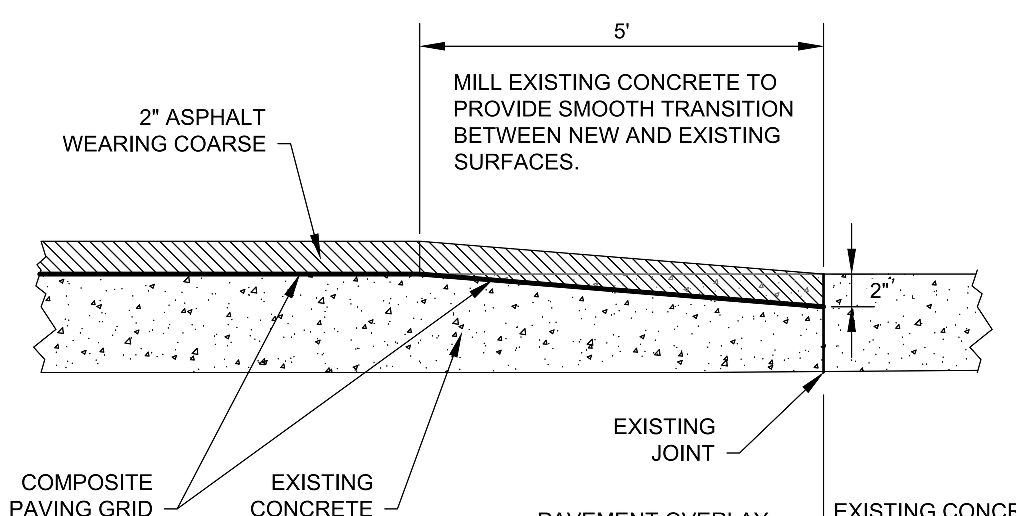

F1 PAVING CONNECTION DETAIL

NOT TO SCALE

Straw Bale Dike

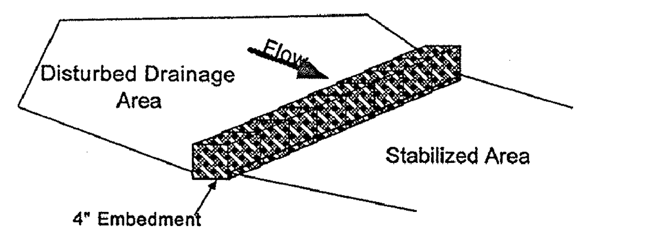

Applications
- **[Perimeter Control]**
- **[Slope Protection]**
- **[Sediment Trapping]**
- Channel Protection
- Temporary Stabilization
- Permanent Stabilization
- Waste Management
- Housekeeping Practices

Targeted Constituents
- ◒ Sediment
- ○ Nutrients Toxic Materials
- ○ Oil & Grease
- ◒ Floatable Materials
- ○ Other Construction Wastes

Implementation Requirements
- ◒ Capital Costs
- ● Maintenance
- ○ Training
- ◒ Suitability for Slopes >5%

Legend
- ● Significant Impact
- ◒ Medium Impact
- ○ Low Impact
- ? Unknown or Questionable Impact

BMP 5

City of Baton Rouge Parish of East Baton Rouge

Department of Public Works

DESCRIPTION
A straw bale dike is a temporary barrier constructed of straw bales anchored with wood posts, that is used to intercept sediment-laden runoff generated by small disturbed areas. The straw bales can serve as both a filtration device and a dam/dike device to treat and redirect flow. Bales can consist of hay or straw in which straw is defined as best quality straw from wheat, oats or barley, free of weed and grass seed and hay is defined as straw which includes weed and grass seed.

PRIMARY USE
A straw bale dike is used to trap sediment-laden storm runoff from small drainage areas with relatively level grades, allowing for reduction of velocity thereby causing sediment to settle out.

APPLICATIONS
Straw bale dikes are used to treat flow after it leaves a disturbed area on a relatively small (<1 acre) site. Due to the limited life of the straw bale, it is cost effective for small projects of a short duration. The limited weight and strength of the straw bale makes it suitable for small, flat (< 2 percent slope) contributing drainage areas. Due to the problems with straw degradation and the lack of uniform quality in straw bales, their use is discouraged except for small residential applications.

Straw bales can also be used as check dams (see Check Dam BMP S-7) for small watercourses such as interceptor swales and borrow ditches. Due to the problems in securely anchoring the bales, only small watercourses can effectively use straw bale check dams.

DESIGN CRITERIA
- Straw bale dikes are to be constructed along a line of constant elevation (along a contour line).
- Straw bale dikes are suitable only for treating sheet flows across grades of 2% or flatter.
- Maximum contributing drainage area shall be 0.25 acre per 100 linear feet of dike.
- Maximum distance of flow to dike should be 100 feet or less.

Straw Bale Dike

- Dimensions for individual bales shall be 30 inches minimum length, 18 inches minimum height, 24 inches minimum width and shall weigh no less than 50 pounds when dry.
- Each straw bale shall be placed into an excavated trench having a depth of 4 inches and a width just wide enough to accommodate the bales themselves.
- Straw bales shall be installed in such a way that there is no space between bales

- Individual bales shall be held in place by at least two wood stakes driven a minimum distance of 6 inches below the 4" excavated trench to undisturbed ground, with the first stake driven at an angle toward the previously installed bale.
- The ends of the dike shall be turned upgrade to prevent bypass of stormwater.
- Place bales on sides such that bindings are not buried.

LIMITATIONS
Due to a short effective life caused by biological decomposition, straw bales must be replaced after a period of no more than 3 months. During the wet and warm seasons, however, they must be replaced more frequently as is determined by periodic inspections for structural integrity.

Straw bale dikes are not recommended for use with concentrated flows of any kind except for small check flows in which they can serve as a check dam.

The effectiveness of straw bales in reducing sediment is very limited. Improperly maintained, straw bales can have a negative impact on the water quality of the runoff.

MAINTENANCE REQUIREMENTS
Straw bales shall be replaced if there are signs of degradation such as straw located downstream from the bales, structural deficiencies due to rotting straw in the bale or other signs of deterioration. Sediment should be removed from behind the bales when it reaches a depth of approximately 6 inches.

BMP 5

Department of Public Works

F3 STRAW BALE DIKE

NOT TO SCALE

Inlet Protection

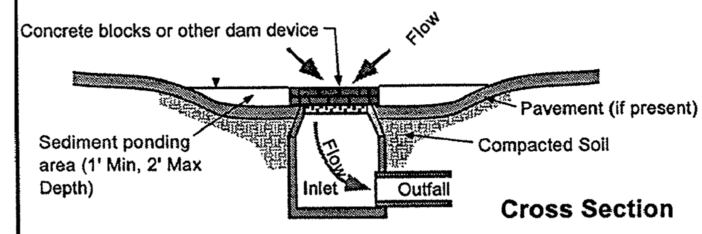

Applications
- Perimeter Control
- Slope Protection
- **[Sediment Trapping]**
- Channel Protection
- Temporary Stabilization
- Permanent Stabilization
- Waste Management
- Housekeeping Practices

Targeted Constituents
- ◒ Sediment
- ○ Nutrients Toxic Materials
- ◒ Oil & Grease
- ◒ Floatable Materials
- ◒ Other Construction Wastes

Implementation Requirements
- ◒ Capital Costs
- ◒ Maintenance
- ◒ Training
- ○ Suitability for Slopes >5%

Legend
- ● Significant Impact
- ◒ Medium Impact
- ○ Low Impact
- ? Unknown or Questionable Impact

BMP 12

City of Baton Rouge Parish of East Baton Rouge

Department of Public Works

DESCRIPTION
Inlet protection consists of a variety of methods of intercepting sediment at low point inlets through the use of stone, filter fabric and other materials. This is normally located at the inlet, providing either detention or filtration to reduce sediment and floatable materials in storm water.

PRIMARY USE
Inlet protection is normally used as a secondary defense in site erosion control . It is normally used in new developments that include new inlets or roads with new curb inlets or during major repairs to existing roadways. Inlet protection has limited use in developed areas due to the potential for flooding, traffic safety and pedestrian safety and maintenance problems. Inlet protection can reduce sediment in storm sewer system by serving as a back up system to onsite controls or by reducing sediment loads from controls with limited effectiveness such as straw bale dikes.

APPLICATIONS
Different variations are used for different conditions as follows:

- Filter barrier protection (similar to a silt fence barrier around the inlet) is appropriate when the drainage area is less than one acre and the basin slope is less than five (5) percent. This type of protection is not applicable in paved areas.
- Block and gravel (crushed stone, recycled concrete is also appropriate) protection is used when flows exceed 0.5 c.f.s. and it is necessary to allow for overtopping to prevent flooding
- Wire mesh and gravel protection (crushed stone, recycled concrete is also appropriate) is used when flows exceed 0.5 c.f.s. and construction traffic may occur over the inlet. This form of protection may be used with both curb and drop inlets

Inlet Protection

- Excavated impoundment protection around a drop inlet may be used for protection against sediment entering a storm drain system. With this method, it is necessary to install weep holes to allow the impoundment to drain completely. The impoundment shall be sized such that the volume of excavation shall be equal to 1800 to 3600 cubic feet per acre of contributing drainage area entering the inlet for full effectiveness. Smaller volumes can be used for reduced effectiveness.

DESIGN CRITERIA
- Filter fabric protection shall be designed and maintained in a manner similar to silt fence.
- Maximum depth of flow shall be eight (8) inches or less depending on vehicular and pedestrian traffic.
- Positive drainage is critical in the design of inlet protection. If overflow is not provided for at the inlet, flows which exceed the capacity of the inlet protection system shall be routed through established swales, streets or other watercourses to minimize damage due to ponding and to provide for public safety.

LIMITATIONS
Ponding will occur at the inlet with possible flooding as a result.

Inlet protection is only viable at low point inlets. Inlets which are on a slope cannot be effectively protected because stormwater will bypass the inlet and continue downstream, causing an overload condition at inlets beyond.

MAINTENANCE REQUIREMENTS
Inspections should be made on a weekly basis, especially after large (> 0.5 inches) storm events. When silt fence is used and the fabric becomes clogged, it should be cleaned or if necessary, replaced. Also, sediment should be removed when it reaches approximately one-half the height of the fence. If a sump is used, sediment should be removed when the volume of the basin is reduced by 50%.

For systems using stone filters, when the stone filter becomes clogged with sediment, the stones must be pulled away from the inlet and cleaned or replaced. Since cleaning of gravel at a construction site may be difficult, an alternative approach would be to use the clogged stone as fill material and put new stone around the inlet.

BMP 12

Department of Public Works

F5 INLET PROTECTION

NOT TO SCALE

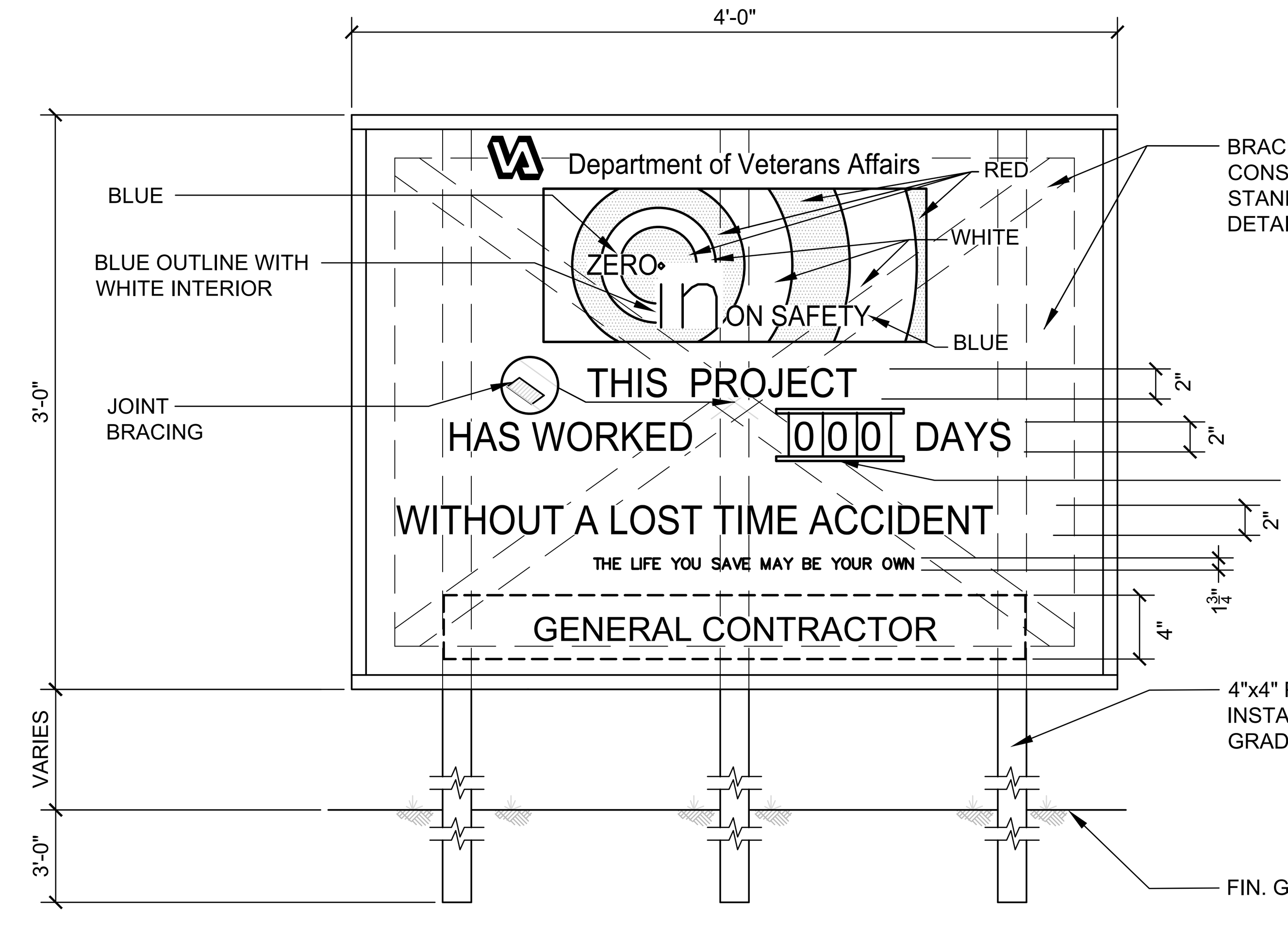

ELEVATION

A8 SAFETY SIGN

NOT TO SCALE

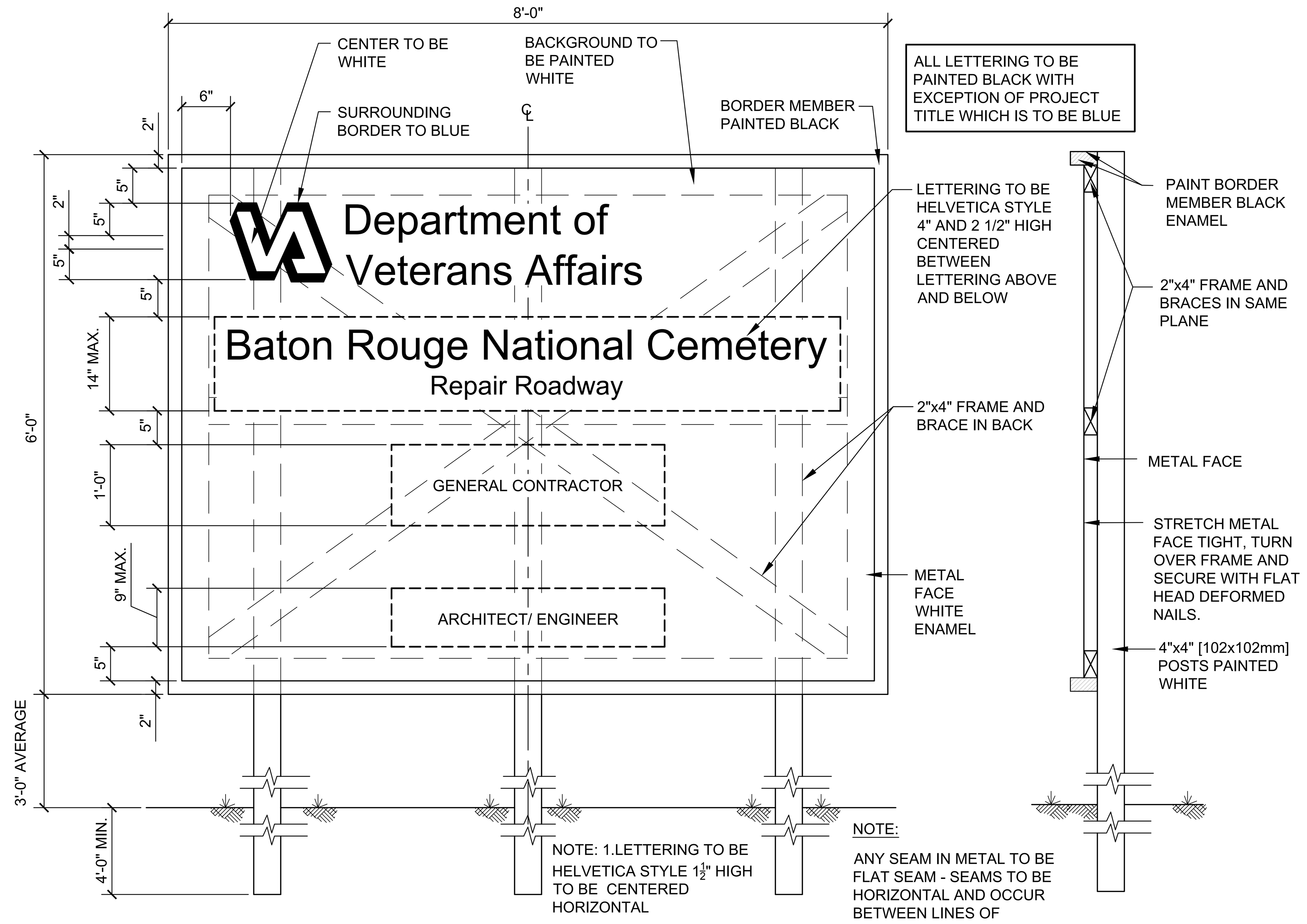

ELEVATION

NOTE:
ANY SEAM IN METAL TO BE FLAT SEAM - SEAMS TO BE HORIZONTAL AND OCCUR BETWEEN LINES OF LETTERING.

SECTION ON CENTERLINE

D8 CONSTRUCTION SIGN

NOT TO SCALE

BID DOCUMENTS

Revisions:	Date

CONSULTANTS:

Terracon Consulting Engineers and Scientists, 2822 O'Neal Lane Bldg B, Baton Rouge, LA 70816, p (225) 344-6052, f (225) 344-6346

BATON ROUGE LAND SURVEYING, A Division of Forte & Tablada, 9107 INTERLINE AVE. BATON ROUGE, LA 70809 PH: (225) 752-0336

CH2MHILL®, CH2M HILL, 6600 Peachtree Dunwoody Road, 400 Embassy Row, Suite 600, Atlanta, GA 30328, Office: (678) 401-7955

REGISTERED PROFESSIONAL ENGINEER, REG. NO. 12448, CASSANDRA L. ZWART, SOUTH DAKOTA, 2/19/16

ARCHITECT/ENGINEERS:

FOURFRONT DESIGN INC., 517 7th street, rapid city sd 57701, p 605.342.9470, f 605.342.2377, www.4front.biz

Preliminary Not For Construction

Drawing Title	Project Title	Project Number
SITE DETAILS	BATON ROUGE NC REPAIR ROADWAY	829CM3016
		Building Number: N/A
Approved: Project Director	Location: BATON ROUGE NATIONAL CEMETERY BATON ROUGE, LA	Drawing Number: C-501
	Date: 2/19/16 · Checked: CZ · Drawn: JM	Dwg. 9 of 9

NCA DESIGN AND CONSTRUCTION SERVICE

Department of Veterans Affairs

VA FORM 08-6231

L:\10-1696 VA NCA IDIQ\1696.037 Baton Rouge NC Repair Roads and Storm Drainage\Drawings\Eng\Sheet Files\829CM3016-C-501.dwg 2-17-16 01:23:47 PM jmalloy