Item No.	Description	Quantity
1	Asbestos-containing floor tile and/or mastic	25 each 12"x12" areas
2	Asbestos-containing pipe insulation joints	60 each
3	Asbestos-containing pipe insulation	100 lineal feet

STANDARD ABATEMENT NOTES

(1) MAINTAIN STAFF AND PUBLIC SPACE THROUGHOUT ALL WORK IN CORRIDORS TO BE PERFORMED DURING OFF-HOURS. CEILING GRIDS AND TILES SHALL BE REINSTALLED EACH DAY FOR REGULAR HOURS

(2) INSTALL 6 MIL POLYETHYLENE DROP CLOTH BELOW PIPE INSULATION JOINTS TO AT LEAST 6 FEET HORIZONTAL DISTANCE FROM EACH ACM JOINT TO BE REMOVED.

(3) INSTALL THREE STAGE PDF AND W/EDF DECONTAMINATION UNITS (SEE SPECIFICATIONS SECTION 028213.13)

(4) REMOVE AND DISPOSE OF ASBESTOS-CONTAINING PIPE INSULATION AND/OR PIPE INSULATION JOINTS IN ACCORDANCE WITH APPLICABLE PROVISIONS OF SECTION 028213.13 OF SPECIFICATIONS

(5) REMOVE AND DISPOSE OF 9" x 9" ASBESTOS-CONTAINING FLOOR TILE AND MASTIC IN ACCORDANCE WITH APPLICABLE PROVISIONS OF SECTION 028213.19 OF SPECIFICATIONS.

(6) REMOVE AND DISPOSE OF ASBESTOS-CONTAINING MASTIC BELOW NON ASBESTOS-CONTAINING 12" x 12" FLOOR TILE IN ACCORDANCE WITH APPLICABLE PROVISIONS OF SECTION 028213.19 OF SPECIFICATIONS

(7) REMOVE AND DISPOSE OF ASBESTOS-CONTAINING MASTIC BELOW CARPETING IN ACCORDANCE WITH APPLICABLE PROVISIONS OF SECTION 028213.19 OF SPECIFICATIONS

(8) SEE DETAILS THIS PAGE

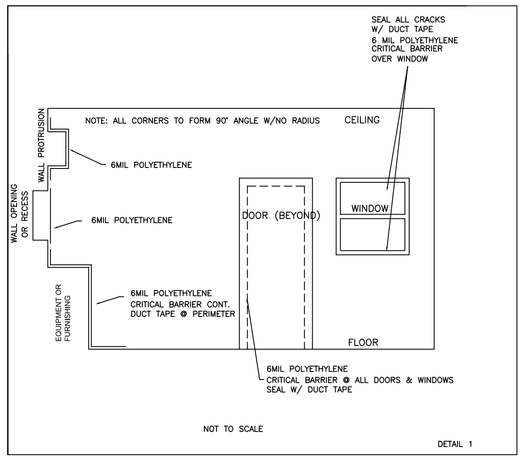

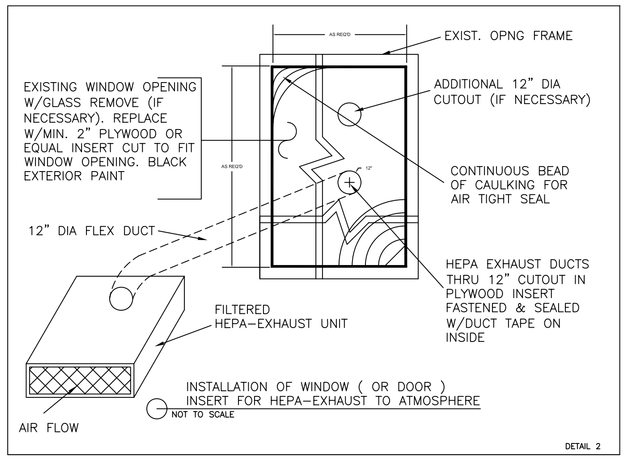

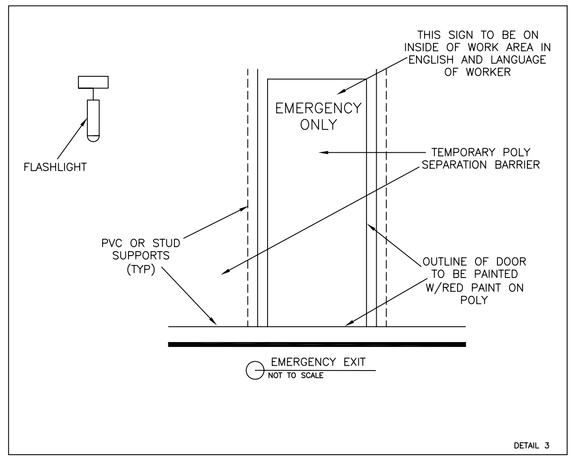

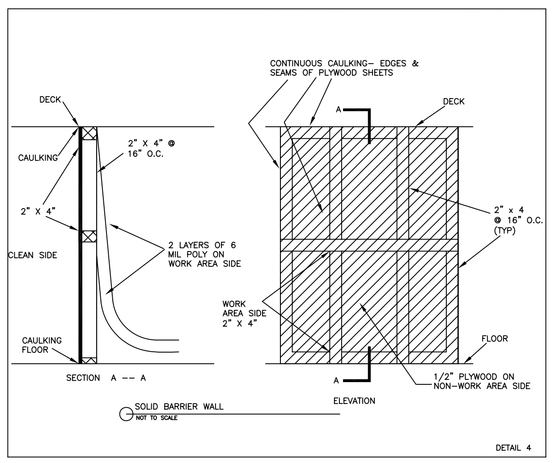

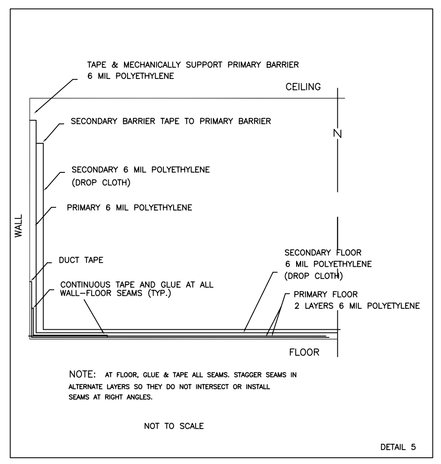

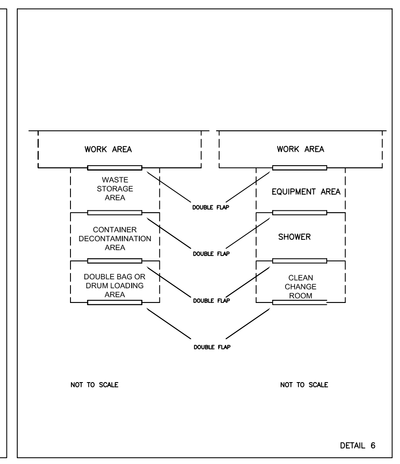

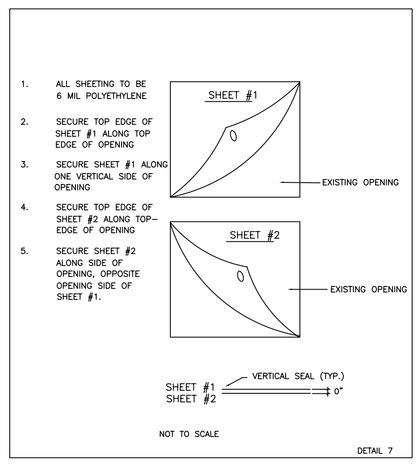

FULLY SPRINKLERED

Revisions:	Date
Amendment 03	11-22-11

CONSULTANTS:

Stephen J. Sebesta & Associates, Inc.
Environmental Health Engineers
17830 Englewood Drive, Suite 16, Cleveland, Ohio 44130
P.216.781.0060

STATE OF OHIO
STEPHEN J. SEBESTA
29515
REGISTERED PROFESSIONAL ENGINEER

ARCHITECT:

Drawing Title: **SCHEDULE OF ASBESTOS ABATEMENT ITEMS & DETAILS**

Approved: Project Director

Project Title: **ENERGY CONSERVATION UPGRADES**

Location: **VAMC - WADE PARK**

Date: 11-22-11 | Checked: **EMO** | Drawn: **CAJ**

Project Number: VA250-P-0396

Building Number: 1

Drawing Number: **1-AA1**

Dwg. 1 of 1

Office of Facilities Management

Department of Veterans Affairs

VA FORM 08-6231, OCT 1978