GENERAL NOTES

A. ALL FINAL POWER REQUIREMENTS AND LOCATIONS SHALL BE COORDINATED WITH EQUIPMENT SPECIFICATIONS.

B. ALL FINAL LOCATIONS AND ARRANGEMENTS OF LIGHTING FIXTURES SHALL BE OBTAINED FROM THE ARCHITECTURAL REFLECTED CEILING PLAN.

C. LIGHTING FIXTURES WITH MORE THAN TWO LAMPS SHALL HAVE TWO OUTER LAMPS CONTROLLED WITH ONE SWITCH AND INNER LAMPS (S) CONTROLLED BY A SECOND SWITCH

D. (1) EACH BRANCH CIRCUIT HOMERUN SHALL HAVE NO MORE THAN THREE CIRCUITS. EACH BRANCH CIRCUIT HOMERUN SHALL HAVE A SEPARATE GREEN INSULATED EQUIPMENT GROUNDING CONDUCTOR.

E. MULT-GANG BACKBOXES FOR DIFFERENT VOLTAGES AND TYPES OF EMERGENCY AND NORMAL BRANCH WIRING DEVICES SHALL HAVE DIVIDERS BETWEEN DEVICES.

F. LUMINAIRES AND EXIT SIGNS WIRED TO LIFE SAFETY / NEC 517 SHALL REMAIN UNSWITCHED UNO.

GENERAL NOTES - DEMOLITION

A. EXISTING EQUIPMENT, SUCH AS LIGHTING FIXTURES, WIRING DEVICES, CONDUITS, ETC., SHOWN ON PLANS TO BE REMOVED COMPLETELY. CUT/CAP CONDUITS AT THE AREA OF WORK PERIMETER AND REMOVE CONDUIT WITHIN THE WORK AREA, DISCONNECT WIRING AT THE OVERCURRENT PROTECTIVE DEVICE AND REMOVE WIRING COMPLETELY FROM THE ABANDONED CONDUITS.

B. REMOVE ALL ACCESSIBLE ABANDONED WIRING OF ALL TYPES, OR CAP AND LABEL IN JUNCTION BOX FOR RE-USE, IN COMPLIANCE WITH THE NATIONAL ELECTRIC CODE.

C. MAINTAIN AND RESTORE, IF INTERRUPTED, ALL CONDUITS AND CONDUCTORS PASSING THROUGH RENOVATED AREAS AND SERVICING UNDISTURBED AREAS.

ELECTRICAL ABBREVIATIONS

1PH	SINGLE-PHASE
1P	SINGLE POLE
2/C	TWO-CONDUCTOR
3/C	THREE-CONDUCTOR
3PH	THREE-PHASE
4/C	FOUR-CONDUCTOR
4W	FOUR-WIRE
A/C UNIT	AIR CONDITIONING UNIT
AC	ALTERNATING CURRENT OR ARMORED CABLE
ACC	ACCESSIBLE
ADO	AUTOMATIC DOOR OPENER
AF	AMPERE FRAME OR AMP FUSE
AFC	ABOVE FINISHED COUNTER,
AFF	ABOVE FINISHED FLOOR
AFG	ABOVE FINISHED GRADE
AHJ	AUTHORITY HAVING JURISDICTION
AIC	AMPERE INTERRUPTING CAPACITY
ALT	ALTERNATE
AMB OR A	AMBIENT
AMP	AMPERE
ARCH	ARCHITECT
ASC	AMPS SHORT CIRCUIT
AT	AMPERE TRIP
ATS	AUTOMATIC TRANSFER SWITCH
AUTO	AUTOMATIC
AV	AUDIO VISUAL
BAS	BUILDING AUTOMATION SYSTEMS
BAT	BATTERY
BFF	BELOW FINISHED FLOOR
BLDG	BUILDING
BRKR	BREAKER
BYP	BYPASS
C	CONDUIT
CAB	CABINET
CAP	CAPACITY
CATV	COMMUNITY ANTENNA TELEVISION
CCR	CONTROL CONTACTOR
CCTV	CLOSED CIRCUIT TEVEVISION
cd	CANDELA
CD	CONSTRUCTION DOCUMENTS
CF/CI	CONTRACTOR FURNISHED/ CONTRACTOR INSTALLED
CF/OI	CONTRACTOR FURNISHED/OWNER INSTALLED
CFE	CONTRACTOR FURNISHED EQUIPMENT
CHW	CHILLED WATER
CHWP	CHILLED WATER PUMP
CKT	CIRCUIT
CKT BRKR	CIRCUIT BREAKER
CLF	CURRENT LIMITING FUSE
CLG	CEILING
COAX	COAX CABLE
COMM	COMMUNICATION
COMPT	COMPARTMENT
CONC	CONCRETE
CONT	CONTINUE
COORD	COORDINATE
CPT	CONTROL POWER TRANSFORMER
CRI	COLOR RENDERING INDEX
CT	CURRENT TRANSFORMER
CTV	CABLE TELEVISION
CU	COPPER
CU FT	CUBIC FEET
CUR	CURRENT
DB	DECIBEL OR DIRECT BURIAL
DC	DIRECT CURRENT
DCP	DIMMER CONTROL PANEL
DEG C	DEGREES CELSIUS
DEG F	DEGREES FAHRENHEIT
DEMO	DEMOLITION
DIAG	DIAGRAM
DISC	DISCONNECT
DISTR PNL	DISTRIBUTION PANEL
DMR SW	DIMMER SWITCH
DPDT	DOUBLE POLE, DOUBLE THROW
DPST	DOUBLE POLE, SINGLE THROW
DRSW	DOOR SWITCH
DS	DISCONNECT SWITCH
DWG	DRAWING
EC	EMPTY CONDUIT
EG	EQUIPMENT GROUND
EL	ELEVATION
ELEC	ELECTRIC OR ELECTRIAL
ELEV	ELEVATOR
EMCP	EMERGENCY MONITORING CONTROL PANEL
EM	EMERGENCY, CRITICAL POWER UNO
EMI	ELECTROMAGNETIC INTERFERENCE
EMT	ELECTRICAL METALLIC TUBING
ENCL	ENCLOSURE
EPO	EMERGENCY POWER OFF
EPRF	EXPLOSION PROOF
ESMT	EASEMENT
EWC	ELECTRIC WATER COOLER
EWH	ELECTRIC WATER HEATER
EXIST	EXISTING
FA	FIRE ALARM
FAAP	FIRE ALARM ANNUNCIATOR PANEL
FABL	FIRE ALARM BELL
FABX	FIRE ALARM BOX
FACP	FIRE ALARM CONTROL PANEL
FC	FOOTCANDLE
FIXT	FIXTURE
FLA	FULL LOAD AMPS
FLEX	FLEXIBLE METALLIC CONDUIT
FLT	FLOODLIGHT
FLUOR	FLUORESCENT
FLUOR FIX	FLUORESCENT FIXTURE
FOUTT	TELEPHONE FLOOR OUTLET
FP	FIRE PROTECTION
FT	FEET OR FOOT
FU SW	FUSED SWITCH
FVNR	FULL VOLTAGE NON-REVERSING
FVR	FULL VOLTAGE REVERSING
G OR GND	GROUND OR GENERATOR
GB	GROUND BUS
GEN	GENERATOR
GFCI	GROUND FAULT CIRCUIT INTERRUPTER
GTB	GROUND TEERMINAL BOX
HID	HIGH INTENSITY DISCHARGE
HOA	HAND-OFF-AUTOMATIC
HP	HORSEPOWER
HT	HEIGHT

IESNA	ILLUMINATION ENGINEERING SOCIETY OF NORTH AMERICA
IMC	INTERMEDIATE METAL CONDUIT
INCAND	INCANDESCENT
IR	INFRARED
J-BOX	JUNCTION BOX
kV	KILOVOLT
kVA	KILOVOLT AMPERE
kVAH	KILOVOLT AMPERE PER HOUR
kVAR	KILOVOLT AMPERE REACTIVE
kW	KILOWATT
kWH	KILOWATT HOUR
LED	LIGHT EMITTING DIODE
LF	LINEAR FEET (FOOT)
LM	LUMEN
LP	LIGHT POLE
LRA	LOCKED ROTOR AMPS
LTCP	LOCAL TEMPERATURE CONTROL PANEL
LT	LIGHT
LTG	LIGHTING
LTG PNL	LIGHTING PANEL
LTNG	LIGHTNING
LV	LOW VOLTAGE
MATV	MASTER ANTENNA TELEVISION SYSTEM
MAX	MAXIMUM
MCA	MINIMUM CIRCUIT AMPS
MCB	MAIN CIRCUIT BREAKER
MCC	MOTOR CONTROL CENTER
MDP	MAIN DISTRIBUTION PANEL
MECH	MECHANICAL
MG	MOTOR GENERATOR
MH	MANHOLE
MIN	MINIMUM
MOCP	MAXIMUM OVERCURRENT PROTECTION
MLO	MAIN LUGS ONLY
MT	MOUNT
MTD	MOUNTED
MTG	MOUNTING
MTS	MANUAL TRANSFER SWITCH
MVA	MEGAVOLT-AMPERE
NA	NOT APPLICABLE
NC	NORMALLY CLOSED
NEC	NATIONAL ELECTRICAL CODE
NEMA	NATIONAL ELECTRICAL MANUFACTURERS ASSOCIATION
NEUT OR N	NEUTRAL
NFPA	NATIONAL FIRE PROTECTION ASSOCIATION
NIC	NOT IN CONTRACT
NL	NIGHT LIGHT
NO	NORMALLY OPEN
NS	NO SCALE
NTS	NOT TO SCALE
OC	ON CENTER
OD	OUTSIDE DIAMETER
OL	OVERLOAD
P	POLE
PA	PUBLIC ADDRESS
PB	PANELBOARD, PULL BOX, OR PUSHBUTTON
PCB	POLYCHLORINATED BIPHENYL
PEC	PHOTOELECTRIC CELL
PED	PEDESTAL
PEND	PENDANT
PF	POWER FACTOR
PH	PHASE
PNL	PANEL
POD	POWER OPERATED DAMPER
PT	POTENTIAL TRANSFORMER
PTRV	POWER TYPE ROOF VENTILATION
PVC	POLYVINYL CHLORIDE (PLASTIC)
PWR	POWER
RCP	REFLECTED CEILING PLAN
REC	RECESSED
RECPT	RECEPTACLE
RGS	RIGID GALVANIZED STEEL
RM	ROOM
RMS	ROOT MEAN SQUARE
SCC	SHORT CIRCUIT CAPACITY
SES	SERVICE ENTRANCE SECTION
SD	SMOKE DETECTOR
SF	SQUARE FOOT (FEET)
SHT	SHEET
SI	INTERNATIONAL SYSTEM OF UNITS
SPEC	SPECIFICATION
SPST	SINGLE POLE, SINGLE THROW
SURF	SURFACE
SW	SWITCH
SWBD	SWITCHBOARD
SWGR	SWITCHGEAR
TC	TIME CLOCK
TEL	TELEPHONE
TP	TWISTED PAIR
TPS	TWISTED PAIR SHIELDED
TTB	TELEPHONE TERMINAL BOARD
TV	TELEVISION
TYP	TYPICAL
TGB	TELECOMMUNICATIONS GROUNDING BUS
UFD	UNDERFLOOR DUCT
UGND	UNDERGROUND
UL	UNDERWRITERS LABORATORY
UNO	UNLESS OTHERWISE NOTED
UPS	UNINTERRUPTIBLE POWER SUPPLY
V	VOLT
VA	VOLT AMPERE
VAR	VOLT AMPERE REACTIVE
VFD	VARIABLE FREQUENCY DRIVE
VOLT	VOLTAGE
W	WATT
WP	WEATHERPROOF
XFER	TRANSFER
XFMR	TRANSFORMER
II	ROMAN NUMERAL INDICATES NUMBER OF DEVICES UNDER COMMON FACEPLATE

EQUIPMENT DESIGNATIONS

D 4 LC 1

- BUILDING
- LEVEL
- EQUIPMENT NAME
- SEQUENCE NUMBER
- NUMBERS IN SEQUENCE - 1,2,3, ETC.

ATSF	AUTOMATIC TRANSFER SWITCH, FIRE PUMP
ATSS	AUTOMATIC TRANSFER SWITCH, LIFE SAFETY (NEC 517)
ATSC	AUTOMATIC TRANSFER SWITCH, CRITICAL (NEC 517)
ATSE	AUTOMATIC TRANSFER SWITCH, EQUIPMENT (NEC 517)
ATSX	AUTOMATIC TRANSFER SWITCH, X-RAY
ATSM	AUTOMATIC TRANSFER SWITCH, MIXED EXISTING
ATSS	AUTOMATIC TRANSFER SWITCH, STANDBY (NEC 701)
ATSO	AUTOMATIC TRANSFER SWITCH, OPTIONAL (NEC 702)
BPS	BOLTED PRESSURE SWITCH
CB	CIRCUIT BREAKER
CRT	FIRE ALARM CRT ANNUNCIATOR
DS	UNFUSED DISCONNECT SWITCH
DT	DAY TANK
EC	ELEVATOR CONTACTOR
FAP	FIRE ALARM ANNUNCIATOR
FATC	FIRE ALRAM TERMINAL CABINET
FDS	FUSED DISCONNECT SWITCH
FPU	FIELD PROCESSING UNIT
GC	GENERAL PURPOSE CONTACTOR
IDRS	INTEGRATED DATA CENTER RACK SYSTEM
IEC	INTERCOM EQUIPMENT CABINET
IPC	INTEGRATED POWER CENTER
LC	LIGHTING CONTACTOR
LRC	LIGHTING RELAY CABINET
LVS	LOW VOLTAGE POWER SWITCHGEAR
MCCE	MOTOR CONTROL CONTER, EQUIPMENT (NEC 517)
MCCN	MOTOR CONTROL CENTER, NORMAL
MCCO	MOTOR CONTROL CENTER, OPTIONAL (NEC 702)
MCCS	MOTOR CONTROL CENTER, STANDBY (NEC 701)
MMC	MODULAR METER CENTER
MS	METER SOCKET
MTSS	MANUAL TRANSFER SWITCH, STANDBY (NEC 701)
MTSO	MANUAL TRANSFER SWITCH, OPTIONAL (NEC 702)
MVR	MEDIUM VOLTAGE REGULATOR
MVS	MEDIUM VOLTAGE SWITCHGEAR
NEC	NURSE CALL EQUIPMENT CABINET
PBL	PLUG-IN BUSWAY LIGHTING
PBP	PLUG-IN BUSWAY POWER
PSS	PRIMARY SUBSTATION
PSU	PATIENT SERVING UNIT
PSWGR	PARALLELING SWITCHGEAR
RUPS	ROTARY HYBRID UNINTERRUPTIBLE POWER SUPPLY
SFP	SURGICAL FACILITY PANEL
SWBDN	SWITCHBOARD, NORMAL
SWBDS	SWITCHBOARD, LIFE SAFETY (NEC 517)
SWBDC	SWITCHBOARD, CRITICAL (NEC 517) S
SWBDE	SWITCHBOARD, EQUIPMENT (NEC 517)
SWBDE	SWITCHBOARD, EMERGENCY (NEC 700)
SWBDS	SWITCHBOARD, STANDBY (NEC 701)
SWBDO	SWITCHBOARD, OPTIONAL (NEC 702)
T	TRANSFORMER
TBTP	TELECOMMUNICATION BACKBONE TERMINATION PANEL
TDTP	TELECOMMUNICATION DEVICE TERMINATION PANEL
TMGR	TELECOMMUNICATION MAIN GROUND BUS
TMGB	TELECOMMUNICATION ROOM GROUND BUS
TC	TIME CLOCK
TVSS	TRANSIENT VOLTAGE SURGE SUPPRESSOR
UPS	UNINTERRUPTIBLE POWER SUPPLY
USSHV	UNIT SUBSTATION AT 480Y/277 SECONDARY VOLTAGE
USSLV	UNIT SUBSTATION AT 208Y/120 SECONDARY VOLTAGE
B	BASEMENT LEVEL
G	GROUND LEVEL
1	LEVEL 01
2	LEVEL 02
M	MEZZANINE LEVEL
D	"D" BUILDING (SEE SITE PLAN FOR DESIGNATIONS)

PANELBOARDS DESIGNATIONS

D 4 P E L 1

- BUILDING
- LEVEL
- TYPE
- SYSTEM/SOURCE
- VOLTAGE
- SEQUENCE NUMBER
- NUMBERS IN SEQUENCE - 1,2,3, ETC.

H	480Y/277V
L	208V/120V OR 240V
N	NORMAL BRANCH
G	GENERATOR POWER
S	LIFE SAFETY BRANCH (NEC 517)
C	CRITICAL BRANCH (NEC 517)
E	EQUIPMENT BRANCH (NEC 517)
M	MIXED EXISTING BRANCH
E	EMERGENCY BRANCH (NEC 700)
S	STANDBY BRANCH (NEC 701)
O	OPTIONAL BRANCH (NEC 702)
I	ISOLATED PANELBOARD
K	KITCHEN PANELBOARD
L	LIGHTING AND APPLIANCE PANELBOARD
O	OPERATING ROOM PANELBOARD
P	POWER DISTRIBUTION PANELBOARD
X	X-RAY PANELBOARD
B	BASEMENT LEVEL
G	GROUND LEVEL
1	LEVEL 01
2	LEVEL 02
M	MEZZANINE LEVEL
D	"D" BUILDING (SEE SITE PLAN FOR DESIGNATIONS)

BRANCH VOLTAGE DROP

CONDUCTOR AWG	#12	#10	#8
MAXIMUM CONDUCTOR LENGTH AT 120V	95	160	245
MAXIMUM CONDUCTOR LENGTH AT 277V	225	375	565
MAXIMUM CONDUCTOR LENGTH AT 208V 1 PH.	170	280	425
MAXIMUM CONDUCTOR LENGTH AT 480V 1 PH.	390	650	985
GROUND CONDUCTOR AWG	#12	#10	#8

NOTES:

1. INCREASE BRANCH CIRCUIT CONDUCTOR AS INDICATED. ALL LENGTHS IN FEET.
2. BASED ON 20A CIRCUIT LOADED TO 10A USING SINGLE PHASE, 2 WIRE CIRCUITS.
3. SCHEDULE REPRESENTS MINIMUM CONDUCTOR SIZE BASED ON LENGTH OF BRANCH CIRCUIT CONDUCTOR FROM PANEL TO PHYSICAL CENTER OF LOAD TO OVERCOME VOLTAGE DROP. 3% VOLTAGE DROP ASSUMED.
4. TRANSITION FROM LARGER CONDUCTOR SIZE TO #12 FOR FINAL TERMINATION TO OUTLET DEVICE. PROVIDE JUNCTION BOX WITHIN 10' OF OUTLET. EXTEND #12 CONDUCTOR TO OUTLET.

GENERAL

- NEW WORK
- EXISTING WORK
- WORK TO BE REMOVED (DEMO PLANS) UNDERFLOOR CONDUIT (NEW PLANS)
- WIRE AND / OR CONDUIT RUN CONTINUED ON REFERENCED DETAIL
- MATCH LINE REFERENCING CONTINUATION ON OTHER DRAWING
- DETAIL AND / OR SECTION REFERENCE / SCOPE OF WORK
- BRANCH CIRCUIT BOUNDARY
- FUTURE WORK

LIGHTING BRANCH CIRCUITS

XXX LUMINAIRE TAG - CORRESPONDS TO LUMINAIRE SCHEDULE
CIRCUIT NUMBER (AND PANELBOARD IF SPECIFICALLY DESIGNATED)
a LOWER CASE LETTER(S) INDICATE MULTI-SWITCH CONTROL ARRANGEMENT.

POWER BRANCH CIRCUITS

CIRCUIT NUMBER (AND PANELBOARD IF SPECIFICALLY DESIGNATED)

ELECTRICAL SYMBOLS - POWER PLAN

- MOTOR, SINGLE-PHASE
- MOTOR, THREE-PHASE
- TRANSFORMER, PLAN
- WYE CONNECTION
- DUCT, CELL FLOOR HEADER
- DUCT, TROLLEY
- DUCT, UNDERFLOOR JUNCTION BOX
- EARTH GROUND
- JUNCTION BOX
- LADDER CABLE TRAY
- BRANCH CIRCUIT HOMERUN. LINES INDICATE NUMBER OF CIRCUITS, NEUTRAL, AND SWITCH LEG CONDUCTORS. ONE SEPARATE GREEN GROUNDING CONDUCTOR SHALL BE PROVIDED FOR EACH HOMERUN; NOT SHOWN
- PULL BOX
- WIREWAY
- RIGID CONDUIT LINE = RC
- DIRECT BURIAL CABLE = DB
- POWER DUCT = P
- SUBSTATION
- HI VOLTAGE SWITCH ON CONCRETE PAD
- LOW VOLTAGE SWITCH ON CONCRETE PAD
- DUAL POWER AND TELECOMMUNICATIONS MANHOLE
- BUSWAY
- FLOOR OUTLET, DATA COMMUNICATION
- OUTLET, DATA COMMUNICATION
- PUSH BUTTON
- DISTRIBUTION PANEL
- LIGHTING PANEL
- PANELBOARD CABINET, FLUSH MOUNTED
- PANELBOARD CABINET, SURFACE MOUNTED
- NORMAL PANELBOARD
- LIFE SAFETY PANELBOARD
- CRITICAL PANELBOARD
- EQUIPMENT PANELBOARD
- RECEPTACLE, CLOCK HANGER
- RECEPTACLE, DUPLEX
- RECEPTACLE, DUPLEX ON EMERGENCY POWER (CRITICAL BRANCH)
- RECEPTACLE, DUPLEX WITH GROUND FAULT CIRCUIT INTERRUPTER
- RECEPTACLE, QUADRAPLEX
- RECEPTACLE, SINGLE
- RECEPTACLE, SINGLE WITH SWITCH
- RECEPTACLE, SPECIAL PURPOSE
  A = 120V, 20A, 1 PHASE, 2-POLE, 3W, NEMA 5-20R
  B = 208V, 20A, 1 PHASE, 2-POLE, 3W, NEMA 6-20R
  C = 120V, 30A, 1 PHASE, 2-POLE, 3W, NEMA 5-30R
  D = 208V, 30A, 1 PHASE, 2-POLE, 3W, NEMA 6-30R
  E = 208V, 60A, 1 PHASE, 3-POLE, 4W, NEMA 14-60R
  F = 208V, 30A, 3 PHASE, 3-POLE, 4W, NEMA 15-30R
  G = 208V, 50A, 3 PHASE, 3-POLE, 4W, NEMA 15-30R
  H = 208V, 60A, 3 PHASE, 3-POLE, 4W, NEMA 15-60R
- RECEPTACLE, SWITCHED DUPLEX
- DROP CORD, SINGLE CONVENIENCE OUTLET, 3-WIRE, GROUNDING TYPE, 20A, W/#12 CONDUCTORS IN FLEXIBLE CORD (CENTER LINE OF OUTLET: 6'-6" [1981mm] AFF. MINIMUM).
- ELECTRICAL STRIP MOLD (OUTLETS ON 2'-0" [610mm] CENTERS OR AS DESIGNATED ON DRAWINGS), MTD 3'-6" [1067mm] AFF OR AS INDICATED
- 3-GANG COMPARTMENT BOX IN FLOOR FOR TELEPHONE, DATA & RECEPTACLE
- RELAY; LETTER INDICATES RELAY TYPE
  50 = INSTANTANEOUS OVERCURRENT OR RATE-OF-RISE
  51 = AC-TIME OVERCURRENT
  67 = AC-DIRECTIONAL OVERCURRENT
  86 = LOCK OUT
- DISCONNECT SWITCH, FUSED
- DISCONNECT SWITCH, UNFUSED

ELECTRICAL SYMBOLS - POWER PLAN

- STARTER, COMBINATION WITH DISCONNECT SWITCH
- STARTER OR MOTOR CONTROLLER
- VARIABLE FREQUENCY DRIVE
- TIME CLOCK
- POTHEAD
- STREE CONE
- RECTIFIER, CATHODIC PROTECTION SANITARY
- VENTILATOR OR FAN COIL UNIT OUTLET
- CONDUIT TERMINATED 6" [152mm] AFF IN STANDARD BOX FOR EXTENSION TO EQUIPMENT AS DIRECTED
- CONDUIT TERMINATED W / COUPLING (FLUSH W / FINISHED FLOOR) FOR EXTENSION TO EQUIPMENT AS DIRECTED
- SWITCH
  F = FUSED SWITCH; K = KEY OPERATED
  L = LOCK; LM = LOW VOLTAGE MASTER
  M = MANUAL MOTOR STARTING; MC = MOMENTARY CONTACT
  MP = MOTOR SNAP WITH PILOT LIGHT (THERMAL TYPE); P = WITH PILOT LIGHT
  PB = PUSH BUTTON STATION; RC = REMOTE CONTROL
  WP = WEATHER PROOF; X = EXPLOSION PROOF
- DIRECT CONNECTION OR MATCHING RECEPTACLE FOR 120V EQUIP
- DIRECT CONNECTION OR RECEPTACLE FOR 120V EMERGENCY EQUIP
- POWER ASSIST PUSH PLATE BACKBOX - MOUNTED 3'-8" A.F.F.

ELECTRICAL SYMBOLS LIGHTING PLAN

- STRIP LUMINAIRE
- GEOMETRIC SHAPE LUMINAIRE, RECESSED OR SURFACE
- (T) INDICATES WALL MOUNT STYLE LUMINAIRE
- INDICATES PENDANT HUNG STYLE LUMINAIRE
- DOWNLIGHT, ROUND OR SQUARE, RECESSED OR SURFACE (INC, CFL, LED, HID)
- WALL WASH STYLE LUMINAIRE, ARROW INDICATES AIMING DIRECTION
- LIGHTING TRACK WITH TRACK MOUNTED LUMINARIES
- SELF CONTAINED BATTERY LIGHTING UNIT
- REMOTE LIGHTING LAMP HEAD(S)
- BATTERY FOR REMOTE LIGHTING LAMP HEAD(S)
- LUMINAIRE CONNECTED TO LIFE SAFETY NEC 700 BRANCH
- LUMINAIRE CONNECTED TO CRITICAL NEC 701 BRANCH
- LUMINAIRE CONNECTED TO CRITICAL / NORMAL BRANCH
- LUMINAIRE CONNECTED TO OPTIONAL / NEC 702 BRANCH
- WALL BOX STYLE ELECTRONIC INTERVAL TIMER, 3'-8" AFF
- WALL BOX STYLE ELECTRONIC TIME SWITCH, 3'-8" AFF
- OCCUPANCY SENSING CONTROL DEVICE- REFER TO TABLE BELOW FOR DESCRIPTION
- INDICATES WALL MOUNT STYLE, 7'-6" AFF, UNO

# = P = WALL BOX STYLE, LINE VOLTAGE, 3'-8" AFF
2P = 2 POLE, WALL BOX STYLE, LINE VOLTAGE, 3'-8" AFF
P1 = WALL/CEILING MOUNT, LOW VOLTAGE, WIDE VIEW
P2 = CEILING MOUNT, LOW VOLTAGE, WIDE VIEW
P3 = WALL/CEILING MOUNT, LOW VOLTAGE, NARROW, LONG RANGE VIEW
P4 = WALL MOUNT, EXTERIOR MOTION SENSING
P5 = CEILING MOUNT, LOW VOLTAGE, ULTRASONIC, WIDE VIEW
P6 = CEILING MOUNT, LOW VOLTAGE, ULTRASONIC, NARROW, LONG RANGE VIEW
P7 = CEILING MOUNT, HIGH BAY, LOW VOLTAGE
P8 = WALL BOX STYLE, PIR COMBINATION OCCUPANCY SENSOR/DIMMER
P9 = WALL BOX STYLE, LOW VOLTAGE, 3'-8" AFF

- DAYLIGHT SENSING (ON/OFF), CONTROL DEVICE, CEILING MOUNTED
- SITE/POLE MOUNTED LUMINAIRE OR HAZARD LIGHT
- EXIT SIGN

COMMUNICATION ABBREVIATIONS

1PH	SINGLE-PHASE
1P	SINGLE POLE
2/C	TWO-CONDUCTOR
3/C	THREE-CONDUCTOR
3PH	THREE-PHASE
4/C	FOUR-CONDUCTOR
4W	FOUR-WIRE
A/C UNIT	AIR CONDITIONING UNIT
A/E	ARCHITECT/ENGINEER
AAP	ALARM ANNUNCIATOR PANEL
AC	ALTERNATING CURRENT OR ARMORED CABLE
ACC	ACCESSIBLE
ADDL	ADDITIONAL
ADJ	ADJACENT, ADJOINING
ADO	AUTOMATIC DOOR OPENER
AFC	ABOVE FINISHED COUNTER,
AFF	ABOVE FINISHED FLOOR
AFG	ABOVE FINISHED GRADE
AHJ	AUTHORITY HAVING JURISDICTION
ALT	ALTERNATE
AMB OR A	AMBIENT
ARCH	ARCHITECT
ATS	AUTOMATIC TRANSFER SWITCH
AUTO	AUTOMATIC
AV	AUDIO VISUAL
BAT	BATTERY
BC	BARE COPPER
BD	BOARD
BFF	BELOW FINISHED FLOOR
BLDG	BUILDING
BPIP	BOILER PLANT INSTRUMENTTATION PANEL
BYP	BY PASS
C	CONDUIT
CAB	CABINET
CALC	CALCULATE
CAP	CAPACITY
CAT	CATALOG
CATV	COMMUNITY ANTENNA TELEVISION
CCR	CONTROL CONTACTOR
CCTV	CLOSED CIRCUIT TEVEVISION
CD	CONSTRUCTION DOCUMENTS
CF	CONTRACTOR FURNISHED
CF/CI	CONTRACTOR FURNISHED/ CONTRACTOR INSTALLED
CF/OI	CONTRACTOR FURNISHED/OWNER INSTALLED
CFE	CONTRACTOR FURNISHED EQUIPMENT
CLG	CEILING
CMU	CONCRETE MASONRY UNIT
COAX	COAX CABLE
COMM	COMMUNICATION
COMPT	COMPARTMENT
CONC	CONCRETE
CONT	CONTINUE
CONTR	CONTRACTOR
COORD	COORDINATE
CTV	CABLE TELEVISION
CU	COPPER
CU FT	CUBIC FEET
CUR	CURRENT
DB	DECIBEL OR DIRECT BURIAL
DC	DIRECT CURRENT
DEG C	DEGREES CELSIUS
DEG F	DEGREES FAHRENHEIT
DEMO	DEMOLITION
DISTR	DISTRIBUTION
DISTR PNL	DISTRIBUTION PANEL
DMR SW	DIMMER SWITCH
DN	DOWN
DRSW	DOOR SWITCH
DWG	DRAWING
EC	EMPTY CONDUIT
EG	EQUIPMENT GROUND
EL	ELEVATION
ELEC	ELECTRIC OR ELECTRIAL
ELEV	ELEVATOR
EMER	EMERGENCY
EMI	ELECTROMAGNETIC INTERFERENCE
EMT	ELECTRICAL METALLIC TUBING
ENCL	ENCLOSURE
EPO	EMERGENCY POWER OFF
ESMT	EASEMENT
EXIST	EXISTING

FLEX	FLEXIBLE METALLIC CONDUIT
FOUTT	TELEPHONE FLOOR OUTLET
FP	FIRE PROTECTION
FT	FEET OR FOOT
FU SW	FUSED SWITCH
G OR GND	GROUND OR GENERATOR
GEN	GENERATOR
GTB	GROUND TEERMINAL BOX
HOA	HAND-OFF-AUTOMATIC
HT	HEIGHT
HZ	HERTZ
IMC	INTERMEDIATE METAL CONDUIT
IR	INFRARED
J-BOX	JUNCTION BOX
LF	LINEAR FEET (FOOT)
LTNG	LIGHTNING
LV	LOW VOLTAGE
MATV	MASTER ANTENNA TELEVISION SYSTEM
MAX	MAXIMUM
MECH	MECHANICAL
MH	MANHOLE
MIN	MINIMUM
MT	MOUNT
MTD	MOUNTED
MTG	MOUNTING
NA	NOT APPLICABLE
NEC	NATIONAL ELECTRICAL CODE
NEUT OR N	NEUTRAL
NIC	NOT IN CONTRACT
NS	NO SCALE
NTS	NOT TO SCALE
OC	ON CENTER
OD	OUTSIDE DIAMETER
P	POLE
PA	PUBLIC ADDRESS
PB	PANELBOARD, PULL BOX, OR PUSHBUTTON
PED	PEDESTAL
PEND	PENDANT
PF	POWER FACTOR
PH	PHASE
PNL	PANEL
PVC	POLYVINYL CHLORIDE (PLASTIC)
PWR	POWER
RCP	REFLECTED CEILING PLAN
REC	RECESSED
RECPT	RECEPTACLE
RGS	RIGID GALVANIZED STEEL
RM	ROOM
REQD	REQUIRED
SF	SQUARE FOOT (FEET)
SHT	SHEET
SI	INTERNATIONAL SYSTEM OF UNITS
SPEC	SPECIFICATION
SURF	SURFACE
SW	SWITCH
TEL	TELEPHONE
TP	TWISTED PAIR
TPS	TWISTED PAIR SHIELDED
TTB	TELEPHONE TERMINAL BOARD
TV	TELEVISION
TYP	TYPICAL
UFD	UNDERFLOOR DUCT
UGND	UNDERGROUND
UL	UNDERWRITERS LABORATORY
UON	UNLESS OTHERWISE NOTED
UPS	UNINTERRUPTIBLE POWER SUPPLY
UTIL	UTILITY
VOLT	VOLTAGE
WP	WEATHERPROOF

COMMUNICATION SYMBOLS

- OUTLET, COMBINATION TELEPHONE/DATA COMMUNICATION (3 CAT6 CABLES)
- CABLE TELEVISION LINE = CATV
- CLOSED CIRCUIT TELEVISION LINE = CCTV. MINIMUM 1" [25mm] CONDUIT
- FIBEROPTICS LINE = FO
- TELEPHONE LINE = T
- TELECOMMUNICATIONS MANHOLE
- FLOOR RECEPTACLE, TELEPHONE
- OUTLET TELEPHONE; LETTER INDICATES AS FOLLOWS:
  J = JACK TYPE W = WALL TYPE
- OUTLET DATA ONLY
- OUTLET, TEVEVISION
  BLANK = 4 11/16" [119mm] MASTER ANTENNA OUTLET BOX W/BLANK COVER, MTD. 18" [457mm] AFF UNLESS OTHERWISE NOTED.
  C = CAMERA (CCTV SYSTEM), MTD 18" [457mm] AFF
  M = MONITOR (CCTV SYSTEM)
- NURSE'S CALL MASTER STATION MTD ON NURSE'S COUNTER TOP UNLESS OTHERWISE NOTED
- NURSE CALL TERMINAL CABINET
- NURSE CALL STATION
  2 = DUPLICATE FACILITIES FOR TWO BEDS (SEPARATE INDICATORS AT MASTER STATION) NTD 5'-0" [1524mm] AFF UNLESS OTHERWISE NOTED
  Cb = CODE BLUE
  D = DUTY STATION. MTD 5'-0" [1524mm] AFF UNLESS NOTED OTHERWISE
  E = MTD 6'-0" [1829mm] AFF FOR SHOWER LOCATION, MTD 4'-6" [1372mm] AFF FOR TUB LOCATION, & MTD 3'-0" [914mm] AFF FC TOILET LOCATION
  P = PSYCHIATRIC CORRIDOR STATION WITH KEY SWITCH
  S = AUDIO VISUAL MALL STATION (STAFF) MTD 5'-0" [1524mm] AFF UNLESS OTHERWISE NOTED
  U = UTILITY CALL STATION, MTD 5'-0" [1524mm] AFF UNLESS OTHERWISE NOTED
- NURSE CALL STATION
  4 = NURSE'S CALL DOME LIGHT (SUFFIX INDICATES No OF LAMP)
  MTD 6" [152mm] ABOVE DOOR
  D = CORRIDOR DOME LIGHT
  I = AUXILIARY INTERSECTIONAL DOME LIGHT
- TELEPHONE BACKBOARD (WALL MOUNTED)
- 3-POLE TWIST-LOCK RECEPTACLE FOR MICROPHONE, MTD. 4'-6" [1372mm] AFF
- REMOTE DICTATING OUTLET MTD 1'-6" [457mm] AFF. UNLESS OTHERWISE NOTED
- GROUND BAR
- OUTLET,DATA CEILING MOUNTED
- OUTLET,DATA CEILING MOUNTED, CAMERA
- GENERATOR ANNUNCIATOR
- UPS ALARM PANEL

NOTE:
FOR WHEELCHAIR PATIENT USE MOUNT TELEPHONE OUTLET 36" [914mm] AFF TO BOTTOM OF OUTLET BOX.

DESK PHONES - MOUNT OUTLET 1'-6" [457mm] AFF

PAY PHONES - MOUNT OUTLET 4'-0" [1219mm] AFF

HEIGHT OF TELECART OUTLETS SHALL BE AS INDICATED ON BEDWALLS OR PBPU DETAILS.

SEE VA BARRIER FREE DESIGN GUIDE PG-18-13.

CONSTRUCTION DOCUMENTS - FINAL BID DOCUMENTS

Revisions: Date

CONSULTANTS:

Landmark Engineering Group, Inc. Civil Engineer, 2834 104th Street, Urbandale, IA 50322, 515.221.1322

Gateway Geotechnical, LLC Geotechnical Engineer, 17736 Edison Avenue, Chesterfield, MO 63005, 636.532.7747

SWT Design Landscape Architect, 7722 Big Bend Boulevard, St. Louis, MO 63119, 314.644.5700

Hinman Consulting Engineers, Inc Physical Security, One Bush Street, Suite 510, San Francisco, CA 94104, 415.621.4423

The Schachinger Group Elevator, 4255 Stoney Creek Drive, Fort Collins, CO 80525, 703.608.2263

SidePlate Steel Frame, 25909 Pala, Ste 200, 92691, Mission Viejo, CA, 949.305.7889

ARCHITECT/ENGINEERS:

CANNONDESIGN

© CannonDesign 2014
All rights reserved. No part of this document may be reproduced or utilized in any form, without prior written authorization by The Cannon Corporation.

Drawing Title: **LEGENDS, SYMBOLS & ABBREVIATIONS**

Approved: Project Director

Project Title: **John J. Pershing VAMC Clinical & Urgent Care Addition**

Location: **Poplar Bluff, Missouri**

Date: DEC 14, 2015 | Checked: TZ | Drawn: AW/CK

Project Number: 657-351

Building Number

Drawing Number: **EP-001**

Dwg. of

Office of Construction and Facilities Management

Department of Veterans Affairs

VA FORM 08-6231

ELECTRONIC SAFETY & SECURITY ABBREVIATIONS

1PH	SINGLE-PHASE
1P	SINGLE POLE
2/C	TWO-CONDUCTOR
3/C	THREE-CONDUCTOR
3PH	THREE-PHASE
4/C	FOUR-CONDUCTOR
4W	FOUR-WIRE
A/C UNIT	AIR CONDITIONING UNIT
A/E	ARCHITECT/ENGINEER
AAP	ALARM ANNUNCIATOR PANEL
AC	ALTERNATING CURRENT OR ARMORED CABLE
ACC	ACCESSIBLE
ADDL	ADDITIONAL
ADJ	ADJACENT, ADJOINING
ADO	AUTOMATIC DOOR OPENER
AFC	ABOVE FINISHED COUNTER,
AFF	ABOVE FINISHED FLOOR
AFG	ABOVE FINISHED GRADE
AHJ	AUTHORITY HAVING JURISDICTION
ALT	ALTERNATE
AMB OR A	AMBIENT
ARCH	ARCHITECT
ATS	AUTOMATIC TRANSFER SWITCH
AUTO	AUTOMATIC
AV	AUDIO VISUAL
BAT	BATTERY
BC	BARE COPPER
BD	BOARD
BFF	BELOW FINISHED FLOOR
BLDG	BUILDING
BPIP	BOILER PLANT INSTRUMENTTATION PANEL
BYP	BY PASS
C	CONDUIT
CAB	CABINET
CALC	CALCULATE
CAP	CAPACITY
CAT	CATALOG
CATV	COMMUNITY ANTENNA TELEVISION
CCR	CONTROL CONTACTOR
CCTV	CLOSED CIRCUIT TEVEVISION
CD	CONSTRUCTION DOCUMENTS
CF	CONTRACTOR FURNISHED
CF/CI	CONTRACTOR FURNISHED/ CONTRACTOR INSTALLED
CF/OI	CONTRACTOR FURNISHED/OWNER INSTALLED
CFE	CONTRACTOR FURNISHED EQUIPMENT
CLG	CEILING
CMU	CONCRETE MASONRY UNIT
COAX	COAX CABLE
COMM	COMMUNICATION
COMPT	COMPARTMENT
CONC	CONCRETE
CONT	CONTINUE
CONTR	CONTRACTOR
COORD	COORDINATE
CTV	CABLE TELEVISION
CU	COPPER
CU FT	CUBIC FEET
CUR	CURRENT
DB	DECIBEL OR DIRECT BURIAL
DC	DIRECT CURRENT
DEG C	DEGREES CELSIUS
DEG F	DEGREES FAHRENHEIT
DEMO	DEMOLITION
DIAG	DIAGRAM
DISTR	DISTRIBUTION
DN	DOWN
DRSW	DOOR SWITCH
DWG	DRAWING
IESNA	ILLUMINATION ENGINEERING SOCIETY OF NORTH AMERICA
IMC	INTERMEDIATE METAL CONDUIT
INCAND	INCANDESCENT
IR	INFRARED
IWH	INSTANTANEOUS WATER HEATER
J-BOX	JUNCTION BOX
kV	KILOVOLT
kVA	KILOVOLT AMPERE
kVAH	KILOVOLT AMPERE PER HOUR
kVAR	KILOVOLT AMPERE REACTIVE
kW	KILOWATT
kWH	KILOWATT HOUR
kWHM	KILOWATT HOUR METER
LED	LIGHT EMITTING DIODE
LF	LINEAR FEET (FOOT)
LM	LUMEN
LP	LIGHT POLE
LPS	LOW PRESSURE SODIUM
LRA	LOCKED ROTOR AMPS
LTCP	LOCAL TEMPERATURE CONTROL PANEL
LT	LIGHT
LTG	LIGHTING
LTG PNL	LIGHTING PANEL
LTNG	LIGHTNING
LV	LOW VOLTAGE
MATV	MASTER ANTENNA TELEVISION SYSTEM
MAX	MAXIMUM
MC	METAL-CLAD
MCA	MINIMUM CIRCUIT AMPS
MCB	MAIN CIRCUIT BREAKER
MCC	MOTOR CONTROL CENTER
MDP	MAIN DISTRIBUTION PANEL
MECH	MECHANICAL
MG	MOTOR GENERATOR
MH	MANHOLE
MIN	MINIMUM
MOCP	MAXIMUM OVERCURRENT PROTECTION
MLO	MAIN LUGS ONLY
MT	MOUNT
MTD	MOUNTED
MTG	MOUNTING
MTS	MANUAL TRANSFER SWITCH
MV	MEDIUM VOLTAGE
MVA	MEGAVOLT-AMPERE
MW	MEGAWATT MICROWAVE
NA	NOT APPLICABLE
NEC	NATIONAL ELECTRICAL CODE
NEMA	NATIONAL ELECTRICAL MANUFACTURERS ASSOCIATION
NEUT OR N	NEUTRAL
NFPA	NATIONAL FIRE PROTECTION ASSOCIATION
NIC	NOT IN CONTRACT
NL	NIGHT LIGHT
NO	NORMALLY OPEN
NS	NO SCALE
NTS	NOT TO SCALE
OC	ON CENTER
OD	OUTSIDE DIAMETER
OL	OVERLOAD
P	POLE
PA	PUBLIC ADDRESS
PB	PANELBOARD, PULL BOX, OR PUSHBUTTON
PBPU	PREFABRICATED BEDSIDE PATIENT UNIT

ELECTRONIC SAFETY & SECURITY ABBREVIATIONS

EC	EMPTY CONDUIT
EG	EQUIPMENT GROUND
EL	ELEVATION
ELEC	ELECTRIC OR ELECTRIAL
ELEV	ELEVATOR
EMER	EMERGENCY
EMI	ELECTROMAGNETIC INTERFERENCE
EMT	ELECTRICAL METALLIC TUBING
ENCL	ENCLOSURE
EPO	EMERGENCY POWER OFF
ESMT	EASEMENT
EXIST	EXISTING
FLEX	FLEXIBLE METALLIC CONDUIT
FOUTT	TELEPHONE FLOOR OUTLET
FP	FIRE PROTECTION
FT	FEET OR FOOT
FU SW	FUSED SWITCH
G OR GND	GROUND OR GENERATOR
GEN	GENERATOR
GTB	GROUND TEERMINAL BOX
HOA	HAND-OFF-AUTOMATIC
HT	HEIGHT
HZ	HERTZ
IMC	INTERMEDIATE METAL CONDUIT
IR	INFRARED
J-BOX	JUNCTION BOX
LED	LIGHT EMITTING DIODE
LF	LINEAR FEET (FOOT)
LM	LUMEN
LP	LIGHT POLE
LPS	LOW PRESSURE SODIUM
LRA	LOCKED ROTOR AMPS
LTCP	LOCAL TEMPERATURE CONTROL PANEL
LT	LIGHT
LTG	LIGHTING
LTG PNL	LIGHTING PANEL
LTNG	LIGHTNING
LV	LOW VOLTAGE
MATV	MASTER ANTENNA TELEVISION SYSTEM
MAX	MAXIMUM
MC	METAL-CLAD
MCA	MINIMUM CIRCUIT AMPS
MCB	MAIN CIRCUIT BREAKER
MCC	MOTOR CONTROL CENTER
MDP	MAIN DISTRIBUTION PANEL
MECH	MECHANICAL
MG	MOTOR GENERATOR
MH	MANHOLE
MIN	MINIMUM
MOCP	MAXIMUM OVERCURRENT PROTECTION
MLO	MAIN LUGS ONLY
MT	MOUNT
MTD	MOUNTED
MTG	MOUNTING
MTS	MANUAL TRANSFER SWITCH
MV	MEDIUM VOLTAGE
MVA	MEGAVOLT-AMPERE
MW	MEGAWATT MICROWAVE
PCB	POLYCHLORINATED BIPHENYL
PEC	PHOTOELECTRIC CELL
PED	PEDESTAL
PEND	PENDANT
PF	POWER FACTOR
PH	PHASE
PNL	PANEL
POD	POWER OPERATED DAMPER
PT	POTENTIAL TRANSFORMER
PTRV	POWER TYPE ROOF VENTILATION
PVC	POLYVINYL CHLORIDE (PLASTIC)
PWR	POWER
RCP	REFLECTED CEILING PLAN
REC	RECESSED
RECPT	RECEPTACLE
RGS	RIGID GALVANIZED STEEL
RM	ROOM
RMS	ROOT MEAN SQUARE
REQD	REQUIRED
SCC	SHORT CIRCUIT CAPACITY
SES	SERVICE ENTRANCE SECTION
SD	SMOKE DETECTOR
SF	SQUARE FOOT (FEET)
SHT	SHEET
SI	INTERNATIONAL SYSTEM OF UNITS
SPEC	SPECIFICATION
SPST	SINGLE POLE, SINGLE THROW
SURF	SURFACE
SW	SWITCH
SWBD	SWITCHBOARD
SWGR	SWITCHGEAR
TC	TIME CLOCK
TEL	TELEPHONE
TP	TWISTED PAIR
TPS	TWISTED PAIR SHIELDED
TTB	TELEPHONE TERMINAL BOARD
TV	TELEVISION
TYP	TYPICAL
UFD	UNDERFLOOR DUCT
UGND	UNDERGROUND
UL	UNDERWRITERS LABORATORY
UON	UNLESS OTHERWISE NOTED
UPS	UNINTERRUPTIBLE POWER SUPPLY
UTIL	UTILITY
V	VOLT
VA	VOLT AMPERE
VAR	VOLT AMPERE REACTIVE
VFD	VARIABLE FREQUENCY DRIVE
VOLT	VOLTAGE
W	WATT
WH	WATER HEATER
WP	WEATHERPROOF
XFER	TRANSFER
XFMR	TRANSFORMER

ELECTRONIC SAFETY AND SECURITY SYMBOLS

CARD ACCESS READER; LETTER INDICATES AS FOLLOWS:
M = MOUNT
C-CEILING D-DESK F-FLUSH H-HIDDEN M-MULLION
P-PEDESTAL R-RACK S-SURFACE W-WALL
T = TECHNOLOGY/TYPE
B-BARCODE F-ELEVATOR FLOOR CALL H-ELEVATOR HALL CALL
M-MAG STRIP P-PROXIMITY S-SMART CARD
T-TOKEN

CENTRAL PROCESSING UNIT

CONTROL PANEL; LETTER INDICATES AS FOLLOWS:
M = MOUNT
C-CEILING D-DESK F-FLUSH H-HIDDEN M-MULLION
P-PEDESTAL R-RACK S-SURFACE W-WALL
T = TECHNOLOGY/TYPE
B-BURGLAR D-DOOR F-FIRE P-PERIMETER

ELECTRONIC LOCK WITH DOOR CONTACT; LETTER INDICATES AS FOLLOWS:
M = MOUNT
C-CEILING D-DESK F-FLUSH H-HIDDEN M-MULLION
P-PEDESTAL R-RACK S-SURFACE W-WALL
T = TECHNOLOGY/TYPE
D-DEADBOLT H-HYBRID L-LATCH SET M-MAGNETIC S-STRIKE

EXIT DEVICE; LETTER INDICATES AS FOLLOWS:
T = TECHNOLOGY/TYPE
D-DELAYED EGRESS E-ELECTRIFIED M-MECHANICAL X-HIGH SECURITY

FIBER OPTIC MODULE; LETTER INDICATES AS FOLLOWS:
M = MOUNT
C-CEILING D-DESK F-FLUSH H-HIDDEN M-MULLION
P-PEDESTAL R-RACK S-SURFACE W-WALL
T = TECHNOLOGY/TYPE
R-RECEIVER T-TRANSCEIVER/X-TRANSMITTER

FIELD PANEL; LETTER INDICATES AS FOLLOWS:
M = MOUNT
C-CEILING D-DESK F-FLUSH H-HIDDEN M-MULLION
P-PEDESTAL R-RACK S-SURFACE W-WALL
T = TECHNOLOGY/TYPE
A-ALARM C-CARD READER

MONITOR; LETTER INDICATES AS FOLLOWS:
M = MOUNT
C-CEILING D-DESK F-FLUSH H-HIDDEN M-MULLION
P-PEDESTAL R-RACK S-SURFACE W-WALL
T = TECHNOLOGY/TYPE
D-DATA G-GRAPHIC M-MULTISCREEN V-VIDEO

ELECTRONIC SAFETY AND SECURITY SYMBOLS

PUSH BUTTON; LETTER INDICATES AS FOLLOWS:
M = MOUNT
C-CEILING D-DESK F-FLUSH H-HIDDEN M-MULLION
P-PEDESTAL R-RACK S-SURFACE W-WALL
T = TECHNOLOGY/TYPE
B-BELL PUSH D-DURESS P-PANIC R-DOOR RELEASE
X-REQUEST-FOR-EXIT

SECURITY ACCESS, VIDEO CAMERA WITH LENS
M = MOTION DETECTOR
PZ = MOTION DETECTOR WITH PAN AND ZOOM
PTZ = MOTION DETECTOR WITH PAN, TILT, AND ZOOM

SECURITY ACCESS, VIDEO CAMERA WITH LENS, ANGLE OF VIEW

SECURITY ACCESS, SENSOR, BURIED VEHICULAR

SECURITY ACCESS, SWITCH, BALANCED MAGNETIC CONTROL

CODE ONE CONTROL AND ALARM STATION. MTD 5'-0" [1524mm] AFF UNLESS OTHERWISE NOTED.

CODE ONE TERMINAL CABINET

CODE ONE ANNUNCIATOR PANEL

CODE ONE BEDSIDE STATION

CODE ONE DUTY STATION, MTD 5'-0" [1524mm] AFF UNLESS OTHERWISE NOTED

ALARM, CHECK VALVE

ALARM, FIRE, COMMUNICATOR

ALARM, FIRE, PANEL; LETTER INDICATES AS FOLLOWS:
FACC = CENTRAL CONSOLE FACU = CONTROL PANEL
MFACP = MASTER CONTROL PANEL FAAP = ANNUNCIATOR PANEL

FIRE ALARM POWER SUPPLY; LETTER INDICATES AS FOLLOWS:
BATT = BATTERIES CHR = CHARGER FAR = RECORDER

ALARM, FIRE, VALVE SUPERVISORY SWITCH

ALARM, FIRE, TERMINAL CABINET

ALARM, FIRE, POST INDICATOR VALVE

ALARM, TRANSPONDER OR TRANSMITTER

NOTIFICATION APPLIANCE CABINET

ALARM, FIRE, MANUAL PULL STATION

ALARM, GONG

ALARM, SPEAKER/LIGHT, ONE ASSEMBLY

ALARM, SPEAKER/LIGHT, ONE ASSEMBLY WITH CHIME

ALARM, SPEAKER/LIGHT, SEPARATE ASSEMBLY

ALARM, LAMP LIGHT, SIGNAL LIGHT, STROBE

ALARM, MANUAL CONTROL

ALARM, MINI HORN

ALARM, SPRINKLER SYSTEM WATER FLOW BELL

ALARM, VOICE COMMUNICATION PANEL

ALARM, TAMPER SWITCH

DETECTION, GAS

DETECTION, SMOKE CONTROL AND PRESSURE PANEL

DETECTION SWITCH, ABORT

DETECTION, SWITCH, VALVE TAMPER

DETECTOR, FLAME FLICKER

DETECTOR, FLOW SWITCH

DETECTOR, HEAT

DETECTOR, HEAT; LETTER INDICATES AS FOLLOWS:
R/T = COMBINATION F = FIXED TEMPERATURE RISE
R/C = RATE COMPENSATION R = RATE OF

DETECTOR; LETTER INDICATES AS FOLLOWS:
BLANK = SMOKE DETECTOR
H = HEAT SMOKE
I = IONIZATION SMOKE
P = PHOTOELECTRIC SMOKE
IH = IONIZATION AND HEAT SMOKE
IP = IONIZATION AND PHOTOELECTRIC SMOKE
PH = PHOTOELECTRIC AND HEAT SMOKE
IPH = IONIZATION, PHOTOELECTRIC, AND HEAT

DETECTOR, SMOKE, FOR DUCT

DETECTOR, SWITCH LEVEL

FIRE ALARM STATION, MANUAL PULL

FIRE ALARM LINE = FA

ELECTROMAGNETIC TYPE DOOR HOLDER OUTLET

CITY FIRE ALARM MASTER STATION MTD 5'-6" [1676mm] AFF UNLESS NOTED

FIRE ALARM TRANSMITTER (BASE LOOP) NUMERALS DENOTE CODE

FIRE ALARM TROUBLE TRANSMITTER (BASE LOOP) NUMERALS DENOTE CODE

SMOKE DETECTOR TEST STATION WITH INDICATOR

COMBINATION FA/PA SPEAKER

DOOR HOLD OPEN

FIRE ALARM RELAY

CONSTRUCTION DOCUMENTS - FINAL BID DOCUMENTS

Revisions:	Date

CONSULTANTS:

Landmark Engineering Group, Inc.
Civil Engineer
2834 104th Street
Urbandale, IA 50322
515.221.1322

Gateway Geotechnical, LLC
Geotechnical Engineer
17736 Edison Avenue
Chesterfield, MO 63005
636.532.7747

SWT Design
Landscape Architect
7722 Big Bend Boulevard
St. Louis, MO 63119
314.644.5700

Hinman Consulting Engineers, Inc
Physical Security
One Bush Street, Suite 510
San Francisco, CA 94104
415.621.4423

The Schachinger Group
Elevator
4255 Stoney Creek Drive
Fort Collins, CO 80525
703.608.2263

SidePlate
Steel Frame
25909 Pala, Ste 200, 92691
Mission Viejo, CA
949.305.7889

ARCHITECT/ENGINEERS:

CANNONDESIGN

© CannonDesign 2014
All rights reserved. No part of this document may be reproduced or utilized in any form, without prior written authorization by The Cannon Corporation.

Drawing Title: **LEGENDS, SYMBOLS & ABBREVIATIONS**

Approved: Project Director

Project Title: **John J. Pershing VAMC Clinical & Urgent Care Addition**

Location: **Poplar Bluff, Missouri**

Date: **DEC 14, 2015** Checked: **TZ** Drawn: **AW/CK**

Project Number: **657-351**
CANNON DESIGN PROJECT NO. 03850.05

Building Number

Drawing Number: **EP-002**
Dwg. of

Office of Construction and Facilities Management

Department of Veterans Affairs

VA FORM 08-6231

1 ELECTRICAL SITE PLAN - DEMOLITION
1" = 30'-0"

GENERAL DEMOLITION NOTES:

A. REMOVE ALL ELECTRICAL EQUIPMENT ON OR IN EXISTING WALLS, CEILINGS AND PARTITIONS WHICH ARE TO BE DEMOLISHED. REMOVE ALL EXPOSED PORTIONS OF BRANCH CIRCUIT AND CONTROL VOLTAGE WIRING AND CONDUITS.

B. WHERE EXISTING WALLS ARE TO REMAIN, REMOVE ALL EXPOSED RACEWAYS, SURFACE AND RECESSED OUTLET BOXES, ETC. WHICH ARE NOT TO BE REUSED. WHERE NEW CONDUITS AND OUTLETS ARE TO BE ADDED TO EXISTING WALLS IN FINISHED ROOMS, THEY SHALL BE CONCEALED BY CUTTING AND PATCHING THE WALLS.

C. UTILIZE EXISTING OUTLET BOXES AND RACEWAY SYSTEMS WHEREVER PRACTICAL IN RENOVATION AREAS. WHERE SUCH EXISTING OUTLET BOXES ARE USED, INSTALL NEW WIRING DEVICES, COVERPLATES, AND WIRING. SPECIAL COVERPLATES MAY BE REQUIRED TO SUIT CONDITIONS.

D. REARRANGE EXISTING CONDUITS AND WIRING TO ACCOMMODATE NEW CIRCUIT ARRANGEMENTS INDICATED AND TO MAINTAIN CONTINUITY OF EXISTING CIRCUITS FEEDING DEVICES THAT ARE TO REMAIN.

E. BE RESPONSIBLE TO REMOVE AND REINSTALL EXISTING ELECTRICAL EQUIPMENT TO ACCOMMODATE THE WORK OF OR DISTURBED BY ALL TRADES.

F. STOCKPILE REMOVED LUMINARIES, POWER AND COMMUNICATION DEVICES ON JOB SITE FOR REUSE UNTIL TIME OR PROJECT CLOSEOUT, THEN REMOVE THOSE FROM SITE THAT THE OWNER DOES NOT WISH TO SALVAGE.

G. EXISTING DEVICE LOCATIONS WERE IDENTIFIED AS COMPLETELY AS POSSIBLE BY A SITE SURVEY AND BY RECORD DOCUMENTS AS AVAILABLE. BE RESPONSIBLE FOR PROPER DEMOLITION AND REWORK OF DEVICES NOT SHOWN ON DRAWINGS TO CONFORM WITH INTENT OF DOCUMENTS.

KEYED NOTES ⬡ :

1.
EXISTING LUMINAIRE AND OTHER DOWNSTREAM LUMINAIRES TO REMAIN AND BE RE-FED FROM NEW RE-ROUTED BRANCH CIRCUIT REFER TO ES-401.

2.
DISCONNECT EXISTING CIRCUITS FEEDING SITE LIGHTING AROUND THE AREA OF THE NEW ADDITION. CIRCUITS CURRENTLY ALTERNATE BETWEEN THREE CIRCUITS FED FROM PANEL 'BSL' LOCATED IN CRAWL SPACE. REFER TO ES-401 FOR APPROXIMATE LOCATION. REMOVE CIRCUITS FROM THE EXISTING SOUTH HANDHOLE TO FIRST FIXTURE SHOWN TO REMAIN ON THE NORTH. SEE ES-401 FOR CIRCUIT CONTINUATION.

3.
DISCONNECT AND REMOVE EXISTING LUMINAIRE, OFFER TO OWNER BEFORE REMOVAL FROM SITE.

4.
DISCONNECT AND REWIRE CIRCUIT FEEDING EXISTING HELIPAD LANDING LIGHTS FROM EXISTING PULLBOX.

5.
DISCONNECT AND REMOVE EXISTING LUMINAIRE, OFFER TO OWNER BEFORE REMOVAL FROM SITE. MAINTAIN CIRCUITS FOR CONTINUATION TO NEW FIXTURES.

6.
DEDUCT ALTERNATE #3: MAINTAIN EXISTING PARKING LOT FIXTURES AND RE-FEED FROM NEW CIRCUIT AS SHOWN ON ES-101.
BASE SCOPE: REMOVE FIXTURES AND OFFER TO OWNER BEFORE REMOVAL FROM SITE.

NORTH ARROW

CONSTRUCTION DOCUMENTS - FINAL BID DOCUMENTS

Revisions: | Date

CONSULTANTS:

Landmark Engineering Group, Inc.
Civil Engineer
2834 104th Street
Urbandale, IA 50322
515.221.1322

Gateway Geotechnical, LLC
Geotechnical Engineer
17736 Edison Avenue
Chesterfield, MO 63005
636.532.7747

SWT Design
Landscape Architect
7722 Big Bend Boulevard
St. Louis, MO 63119
314.644.5700

Hinman Consulting Engineers, Inc
Physical Security
One Bush Street, Suite 510
San Francisco, CA 94104
415.621.4423

The Schachinger Group
Elevator
4255 Stoney Creek Drive
Fort Collins, CO 80525
703.608.2263

SidePlate
Steel Frame
25909 Pala, Ste 200, 92691
Mission Viejo, CA
949.305.7889

ARCHITECT/ENGINEERS:

CANNONDESIGN

© CannonDesign 2014
All rights reserved. No part of this document may be reproduced or utilized in any form, without prior written authorization by The Cannon Corporation.

Drawing Title: **ELECTRICAL SITE PLAN - DEMOLITION**

Approved: Project Director

Project Title: **John J. Pershing VAMC Clinical & Urgent Care Addition**

Location: **Poplar Bluff, Missouri**

Date: **DEC 14, 2015** | Checked: **TZ** | Drawn: **AW/CK**

Project Number: **657-351**
CANNON DESIGN PROJECT NO. 03850.05

Building Number

Drawing Number: **ED-101**
Dwg. of

Office of Construction and Facilities Management

Department of Veterans Affairs

VA FORM 08-6231

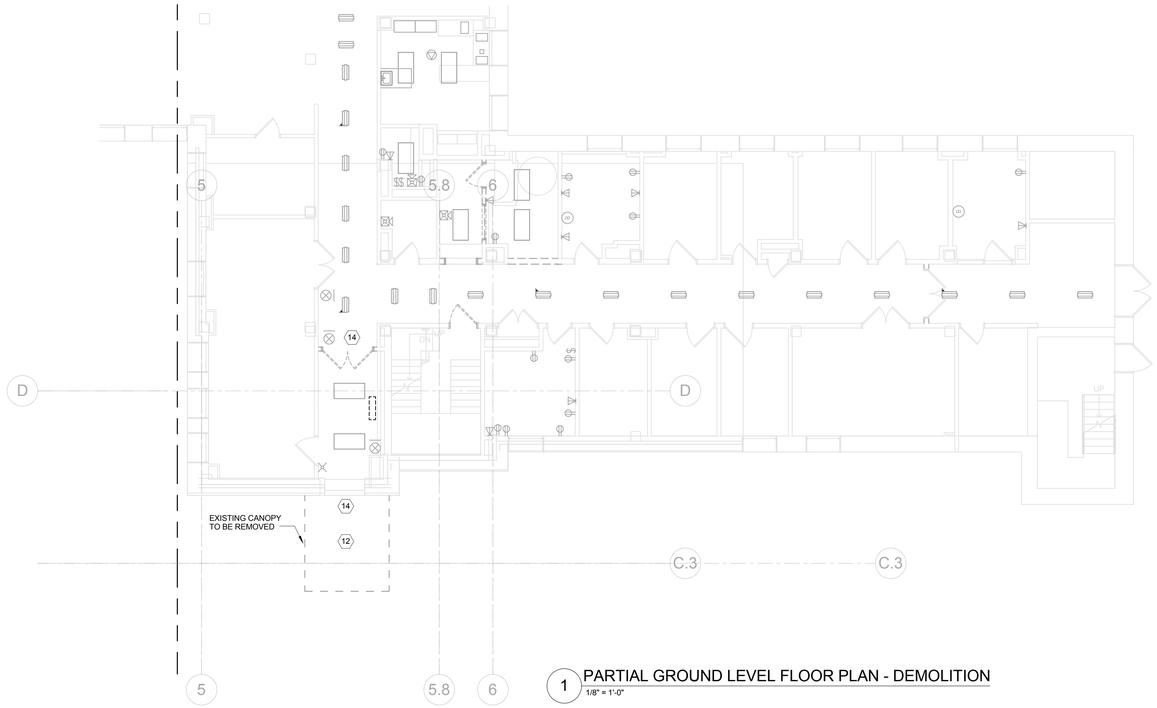

1 PARTIAL GROUND LEVEL FLOOR PLAN - DEMOLITION
1/8" = 1'-0"

GENERAL DEMOLITION NOTES:

A. REMOVE ALL ELECTRICAL EQUIPMENT ON OR IN EXISTING WALLS, CEILINGS AND PARTITIONS WHICH ARE TO BE DEMOLISHED. REMOVE ALL EXPOSED PORTIONS OF BRANCH CIRCUIT AND CONTROL VOLTAGE WIRING AND CONDUITS.

B. WHERE EXISTING WALLS ARE TO REMAIN, REMOVE ALL EXPOSED RACEWAYS, SURFACE AND RECESSED OUTLET BOXES, ETC. WHICH ARE NOT TO BE REUSED. WHERE NEW CONDUITS AND OUTLETS ARE TO BE ADDED TO EXISTING WALLS IN FINISHED ROOMS, THEY SHALL BE CONCEALED BY CUTTING AND PATCHING THE WALLS.

C. UTILIZE EXISTING OUTLET BOXES AND RACEWAY SYSTEMS WHEREVER PRACTICAL IN RENOVATION AREAS. WHERE SUCH EXISTING OUTLET BOXES ARE USED, INSTALL NEW WIRING DEVICES, COVERPLATES, AND WIRING. SPECIAL COVERPLATES MAY BE REQUIRED TO SUIT CONDITIONS.

D. REARRANGE EXISTING CONDUITS AND WIRING TO ACCOMMODATE NEW CIRCUIT ARRANGEMENTS INDICATED AND TO MAINTAIN CONTINUITY OF EXISTING CIRCUITS FEEDING DEVICES THAT ARE TO REMAIN.

E. BE RESPONSIBLE TO REMOVE AND REINSTALL EXISTING ELECTRICAL EQUIPMENT TO ACCOMMODATE THE WORK OF OR DISTURBED BY ALL TRADES.

F. STOCKPILE REMOVED LUMINARIES, POWER AND COMMUNICATION DEVICES ON JOB SITE FOR REUSE UNTIL TIME OR PROJECT CLOSEOUT, THEN REMOVE THOSE FROM SITE THAT THE OWNER DOES NOT WISH TO SALVAGE.

G. EXISTING DEVICE LOCATIONS WERE IDENTIFIED AS COMPLETELY AS POSSIBLE BY A SITE SURVEY AND BY RECORD DOCUMENTS AS AVAILABLE. BE RESPONSIBLE FOR PROPER DEMOLITION AND REWORK OF DEVICES NOT SHOWN ON DRAWINGS TO CONFORM WITH INTENT OF DOCUMENTS.

KEYED NOTES ⬡ :

1.
TWO GENERATOR ANNUNCIATOR PANELS FOR EXISTING GENERATORS LOCATED IN BUILDING 7 AND 16 TO BE REMOVED. PROVIDE NEW ANNUNCIATORS FOR EXISTING GENERATORS AS SHOWN ON DRAWING EP-401. PROVIDE NEW COMMUNICATION CABLES BETWEEN EXISTING GENERATORS AND NEW ANNUNCIATOR PANELS. UTILIZE NEW CONDUIT BETWEEN BUILDING 1 CRAWL SPACE AND THE ADDITION (ROOM LL006) TO ROUTE COMMUNICATION CABLE.

2.
RELOCATE CENTRAL UPS ALARM PANEL. PROVIDE NEW COMMUNICATION CABLES BETWEEN THE EXISTING UPS AND THE RELOCATED ALARM PANEL. UTILIZE NEW CONDUIT BETWEEN BUILDING 1 CRAWL SPACE AND THE ADDITION (ROOM LL006) TO ROUTE COMMUNICATION CABLE.

3.
DISCONNECT POWER TO MEDICAL GAS ALARM PANEL TO BE RELOCATED. PROVIDE NEW 120V LIFE SAFETY POWER CONNECTION AT NEW LOCATION.

4.
EXISTING FIRE ALARM ANNUNICATOR TO REMAIN.

5.
DOOR CONTACT ALARM PANELS TO BE REMOVED. PROVIDE NEW DOOR CONTACT ALARM PANELS AS SHOWN ON DRAWING EP-401. PROVIDE NEW COMMUNICATION CABLES BETWEEN EXISTING DOORS CONTACTS AND THE NEW ALARM PANELS. UTILIZE NEW CONDUIT BETWEEN BUILDING 1 CRAWL SPACE AND THE ADDITION (ROOM LL006) TO ROUTE COMMUNICATION CABLE.

6.
REMOVE LIGHT SWITCH FOR HELIPAD LIGHTS. PROVIDE NEW LIGHT SWITCH AT THE NEW MAA AS SHOWN ON DRAWING EP-401 FOR HELIPAD LIGHTS. REWIRE HELIPAD LIGHTS AS INDICATED.

7.
EXISTING AIR CURTAIN AND AUTO DOOR TOGGLE SWITCHES TO REMAIN.

8.
EXISTING HANDICAP PHONE TO BE RELOCATED TO NEW MAA (ROOM LL007). COORDINATE EXACT LOCATION (DESK/SHELF MOUNTED).

9.
EXISTING CODE PHONE TO BE RELOCATED TO THE NEW MAA (ROOM LL007). COORDINATE EXACT LOCATION (DESK/SHELF MOUNTED).

10.
EXISTING MONITORS TO BE RELOCATED TO THE NEW MAA (ROOM LL007).

11.
EXISTING TELEX PHONE TO BE RELOCATED TO THE NEW MAA (ROOM LL007). COORDINATE EXACT LOCATION (DESK/SHELF MOUNTED).

12.
REMOVE ALL EXISTING DEVICES MOUNTED UNDER CANOPY, INCLUDING LUMINARIES AND SECURITY CAMERAS. REMOVE WIRING AND CONDUITS BACK TO SOURCE, PATCH WALL PENETRATIONS AS REQUIRED.

13.
REMOVE EXISTING FLOODLIGHTS MOUNTED TO SECOND STORY ON THIS WALL. PATCH WALL PENETRATIONS AS REQUIRED.

14.
DISCONNECT AND REMOVE POWER OPERATED DOOR PUSHPLATES, WIRING, AND POWER SUPPLY.

15.
EXISTING MICROBIOLOGY LAB EXHAUST FAN LOCATED ON SECOND STORY WALL TO REMAIN. COORDINATE ANY REQUIRED DOWNTIME WITH OWNER.

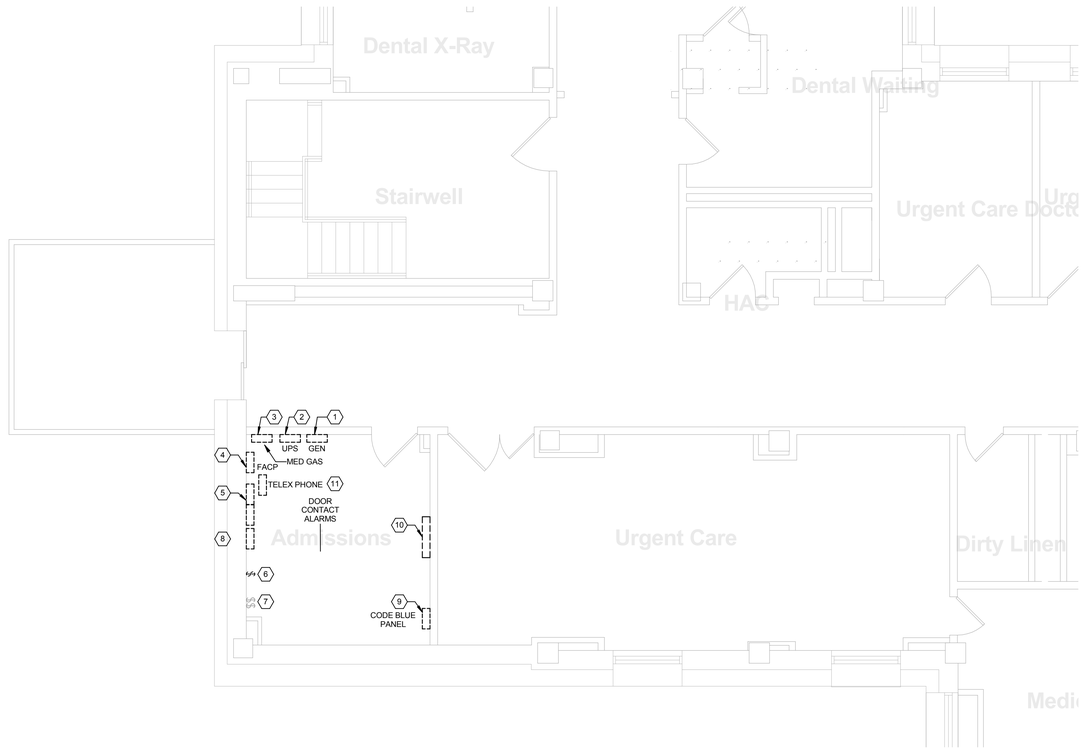

3 PARTIAL LEVEL 01 FLOOR PLAN - DEMOLITION
1/4" = 1'-0"

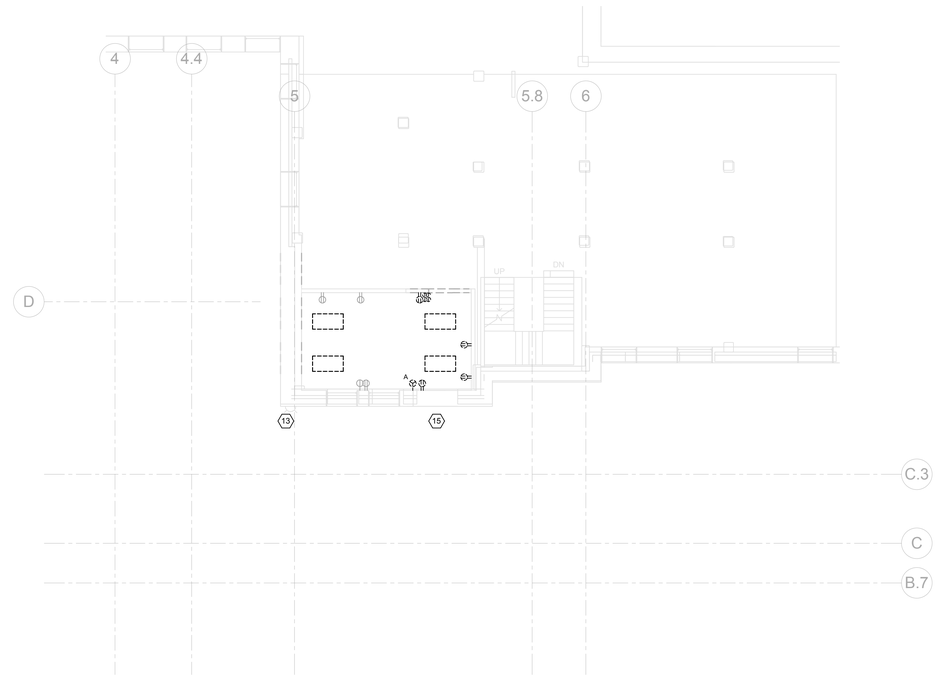

2 PARTIAL LEVEL 01 FLOOR PLAN - DEMOLITION
1/8" = 1'-0"

NORTH ARROW

CONSTRUCTION DOCUMENTS - FINAL BID DOCUMENTS

Revisions: | Date

CONSULTANTS:

Landmark Engineering Group, Inc.
Civil Engineer
2834 104th Street
Urbandale, IA 50322
515.221.1322

SidePlate
Steel Frame
25909 Pala, Ste 200, 92691
Mission Viejo, CA
949.305.7889

Gateway Geotechnical, LLC
Geotechnical Engineer
17736 Edison Avenue
Chesterfield, MO 63005
636.532.7747

SWT Design
Landscape Architect
7722 Big Bend Boulevard
St. Louis, MO 63119
314.644.5700

Hinman Consulting Engineers, Inc
Physical Security
One Bush Street, Suite 510
San Francisco, CA 94104
415.621.4423

The Schachinger Group
Elevator
4255 Stoney Creek Drive
Fort Collins, CO 80525
703.608.2263

ARCHITECT/ENGINEERS:

CANNONDESIGN

© CannonDesign 2014
All rights reserved. No part of this document may be reproduced or utilized in any form, without prior written authorization by The Cannon Corporation.

Drawing Title
GROUND LEVEL AND FIRST LEVEL PLAN - DEMOLITION

Approved: Project Director

Project Title
John J. Pershing VAMC Clinical & Urgent Care Addition

Location
Poplar Bluff, Missouri

Date **DEC 14, 2015** | Checked **TZ** | Drawn **AW/CK**

Project Number **657-351**
CANNON DESIGN PROJECT NO. 03850.05

Building Number

Drawing Number
ED-102
Dwg. of

Office of Construction and Facilities Management
Department of Veterans Affairs

VA FORM 08-6231

BRANCH CIRCUIT NOTES ◇ :

1. EXTEND BRANCH CIRCUITS IN THIS AREA TO THE FOLLOWING BRANCH PANELBOARDS, UNLESS OTHERWISE NOTED:

   120 / 208V PANELBOARDS
   1LNL2 - NORMAL POWER
   1LSL1 - LIFE SAFETY POWER (NEC 517)
   1LCL1 - CRITICAL POWER (NEC 517)

GENERAL NOTES :

A.
WIRE LUMINAIRES TAGGED WITH SINGLE LETTER DESIGNATOR (FOR EXAMPLE 'a') THRU LOCAL SWITCH OR OCCUPANCY SENSOR SHOWN. WIRE LUMINAIRES TAGGED DOUBLE LETTER DESIGNATOR (FOR EXAMPLE 'bb') THRU CENTRAL RELAY PLANEL "1LRC1".

KEYED NOTES ⬡ :

1.
WIRE EXTERIOR LIFE SAFETY LUMINAIRES THRU EM LIGHTING CONTACTOR, ELC-1. SEE DETAIL 6F/EL-501.

2.
LW2 LOCATED IN ELEVATOR PIT. COORDINATE LUMINAIRE AND SWITCH LOCATION WITH THE ELEVATOR INSTALLER. WIRE FIXTURES THROUGH COMMON CIRCUIT FED FROM LOWER LEVEL.

3.
LOW VOLTAGE OVERRIDE SWITCHES FOR RELAYS aa, bb, cc, dd, ee, jj AND kk.

4.
PROVIDE PHILLIPS BODINE GTD BALLAST OR EQUAL FOR THIS FIXTURE. PROVIDE CONNECTION TO AN UNSWITCHTED NORMAL POWER CIRCUIT SERVING LOBBY AREA TO SENSE LOSS OF NORMAL POWER.

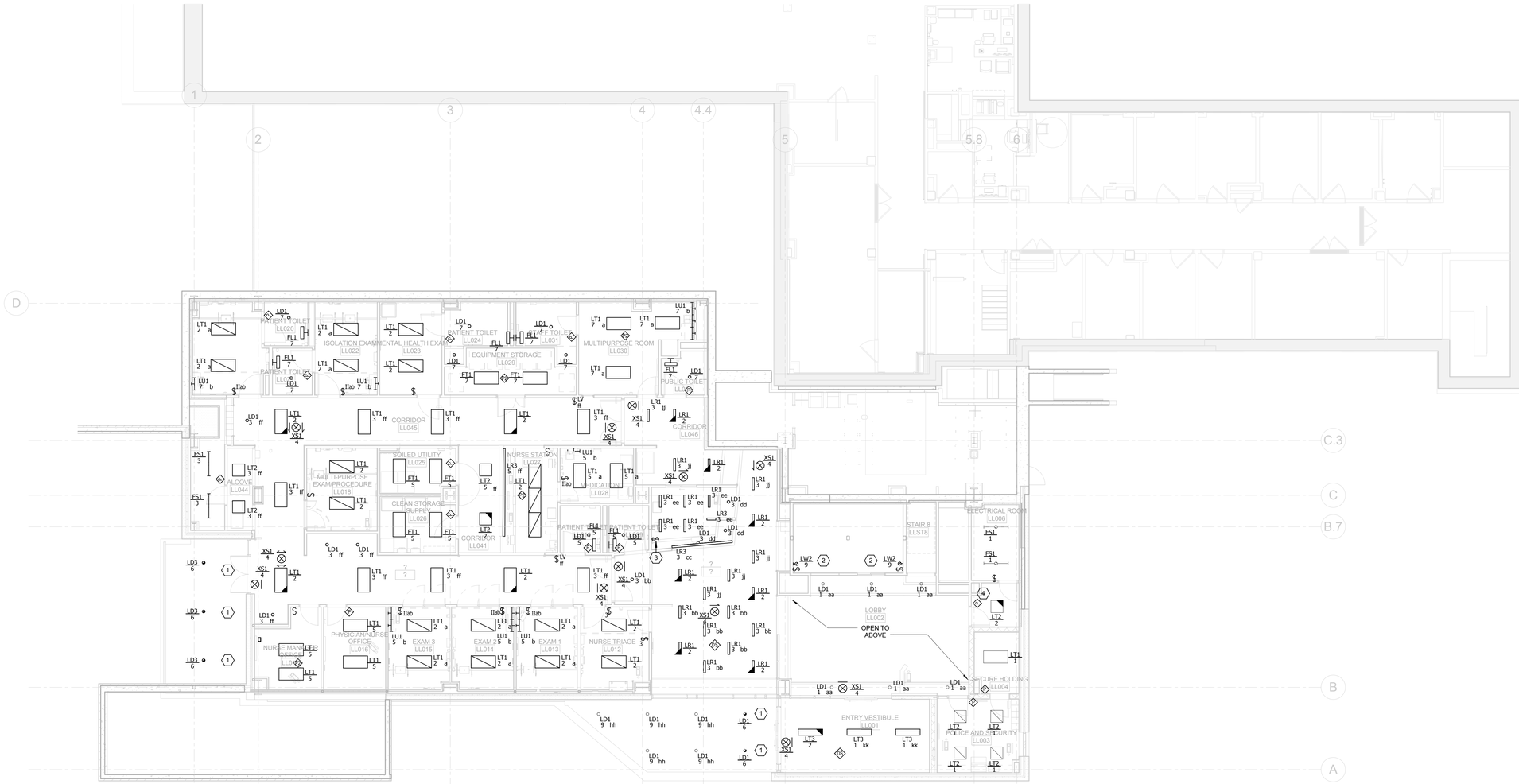

3F LOWER LEVEL LIGHTING PLAN
1/8" = 1'-0"

NORTH ARROW

CONSTRUCTION DOCUMENTS - FINAL BID DOCUMENTS

Revisions:	Date

CONSULTANTS:

Landmark Engineering Group, Inc.
Civil Engineer
2834 104th Street
Urbandale, IA 50322
515.221.1322

SidePlate
Steel Frame
25909 Pala, Ste 200, 92691
Mission Viejo, CA
949.305.7889

Gateway Geotechnical, LLC
Geotechnical Engineer
17736 Edison Avenue
Chesterfield, MO 63005
636.532.7747

SWT Design
Landscape Architect
7722 Big Bend Boulevard
St. Louis, MO 63119
314.644.5700

Hinman Consulting Engineers, Inc
Physical Security
One Bush Street, Suite 510
San Francisco, CA 94104
415.621.4423

The Schachinger Group
Elevator
4255 Stoney Creek Drive
Fort Collins, CO 80525
703.608.2263

ARCHITECT/ENGINEERS:

CANNONDESIGN

© CannonDesign 2014
All rights reserved. No part of this document may be reproduced or utilized in any form, without prior written authorization by The Cannon Corporation.

Drawing Title
LOWER LEVEL LIGHTING PLAN

Approved: Project Director

Project Title
John J. Pershing VAMC Clinical & Urgent Care Addition

Location
Poplar Bluff, Missouri

Date **DEC 14, 2015** | Checked **TZ** | Drawn **AW/CK**

Project Number **657-351**
CANNON DESIGN PROJECT NO. 03850.05

Building Number

Drawing Number
EL-101
Dwg. of

Office of Construction and Facilities Management

Department of Veterans Affairs

VA FORM 08-6231

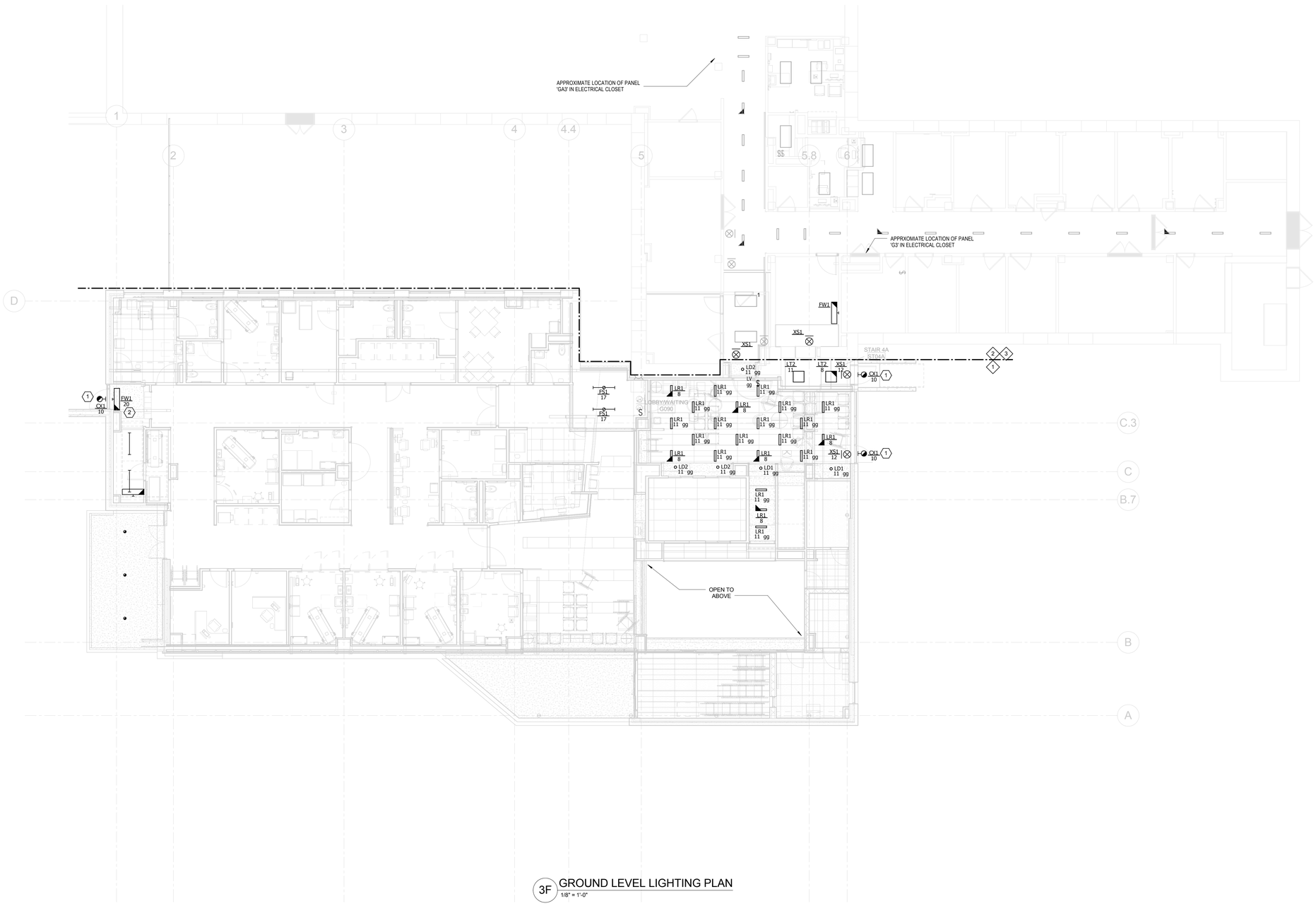

3F GROUND LEVEL LIGHTING PLAN
1/8" = 1'-0"

BRANCH CIRCUIT NOTES ◇ :

1. EXTEND BRANCH CIRCUITS IN THIS AREA TO THE FOLLOWING BRANCH PANEL BOARDS, UNLESS NOTED OTHERWISE:

   120/208V PANELBOARDS:
   1LNL2 - NORMAL POWER
   1LSL1 - LIFE SAFETY POWER (NEC 517)
   1LCL1 - CRITICAL POWER (NEC 517)

2. REWORK EXISTING BRANCH CIRCUITS FROM PANELS 'GC' AND 'GA3' TO NEW FIXTURES AS SHOWN. PROVIDE NEW SWITCHING DEVICE AS SHOWN. CIRCUIT NUMBERS SHOWN FOR DESIGN INTENT, CONFIRM AVAILIBILITY OF EXISTING CIRCUITS.

3. WIRE NEW CORRIDOR LUMINAIRES AND EXIT SIGNS TO EXISTING NORMAL OR LIFE SAFETY PANELS THAT FEED ADJACENT LUMINAIRES. NORMAL POWER LUMINAIRES SHALL BE CONTROLLED BY EXISTING CONTROL DEVICES WITH EXISTING CORRIDOR LUMINAIRES.

GENERAL NOTES :

A.
WIRE LUMINAIRES TAGGED WITH SINGLE LETTER DESIGNATOR (FOR EXAMPLE 'a') THRU LOCAL SWITCH OR OCCUPANCY SENSOR SHOWN. WIRE LUMINAIRES TAGGED DOUBLE LETTER DESIGNATOR (FOR EXAMPLE 'bz') THRU CENTRAL RELAY PLANEL "1LRC1".

KEYED NOTES ⬡ :

1.
WIRE EXTERIOR LIFE SAFETY LUMINAIRES THRU EM LIGHTING CONTACTOR, ELC-1. SEE DETAIL 8/EL-501.

2.
WIRE FW1 LUMINAIRE IN STAIRWELL TO COMMON CIRCUIT, FED FROM 2LNL2.

NORTH ARROW

CONSTRUCTION DOCUMENTS - FINAL BID DOCUMENTS

Revisions:	Date

CONSULTANTS:

Landmark Engineering Group, Inc.
Civil Engineer
2834 104th Street
Urbandale, IA 50322
515.221.1322

Gateway Geotechnical, LLC
Geotechnical Engineer
17736 Edison Avenue
Chesterfield, MO 63005
636.532.7747

SWT Design
Landscape Architect
7722 Big Bend Boulevard
St. Louis, MO 63119
314.644.5700

Hinman Consulting Engineers, Inc
Physical Security
One Bush Street, Suite 510
San Francisco, CA 94104
415.621.4423

The Schachinger Group
Elevator
4255 Stoney Creek Drive
Fort Collins, CO 80525
703.698.2263

SidePlate
Steel Frame
25909 Pala, Ste 200, 92691
Mission Viejo, CA
949.305.7889

ARCHITECT/ENGINEERS:

CANNONDESIGN

© CannonDesign 2014
All rights reserved. No part of this document may be reproduced or utilized in any form, without prior written authorization by The Cannon Corporation.

Drawing Title: **GROUND LEVEL LIGHTING PLAN**

Approved: Project Director

Project Title: **John J. Pershing VAMC Clinical & Urgent Care Addition**

Location: **Poplar Bluff, Missouri**

Date: **DEC 14, 2015** | Checked: **TZ** | Drawn: **AW/CK**

Project Number: **657-351**
CANNON DESIGN PROJECT NO. 03850.05

Building Number

Drawing Number: **EL-102**
Dwg. of

Office of Construction and Facilities Management

Department of Veterans Affairs

VA FORM 08-6231

BRANCH CIRCUIT NOTES ◇ :

1. EXTEND BRANCH CIRCUITS IN THIS AREA TO THE FOLLOWING BRANCH PANELBOARDS, UNLESS OTHERWISE NOTED:

   120 / 208V PANELBOARDS
   2LNL2 - NORMAL POWER
   1LSL1 - LIFE SAFETY POWER (NEC 517)
   2LCL1 - CRITICAL POWER (NEC 517)

2. REWORK EXISTING BRANCH CIRCUITS TO NEW FIXTURES AS SHOWN. PROVIDE NEW SWITCHING DEVICE AS SHOWN.

GENERAL NOTES :

A.
WIRE LUMINAIRES TAGGED WITH SINGLE LETTER DESIGNATOR (FOR EXAMPLE 'a') THRU LOCAL SWITCH OR OCCUPANCY SENSOR SHOWN. WIRE LUMINAIRES TAGGED DOUBLE LETTER DESIGNATOR (FOR EXAMPLE 'bb') THRU CENTRAL RELAY PLANEL '2LRC1'.

KEYED NOTES ⬡ :

1.
WIRE FW1 LUMINAIRE IN STAIRWELL TO COMMON STAIRWELL CIRCUIT.

2.
LW2 LOCATED AT TOP OF ELEVATOR SHAFT. COORDINATE LUMINAIRE AND SWITCH LOCATION WITH THE ELEVATOR INSTALLER. WIRE FIXTURES THROUGH COMMON CIRCUIT FED FROM LOWER LEVEL PANEL, 1LCL1.

3.
WIRE OWNER FURNISHED EXAM LIGHT TO CRITICAL POWER. PROVIDE ALL REQUIRED ROUGH-IN AND WIRING FOR CONTROLS, ETC.

4.
LOW VOLTAGE OVERRIDE SWITCHES FOR RELAYS aa, bb, cc, dd, ee, ff AND kk.

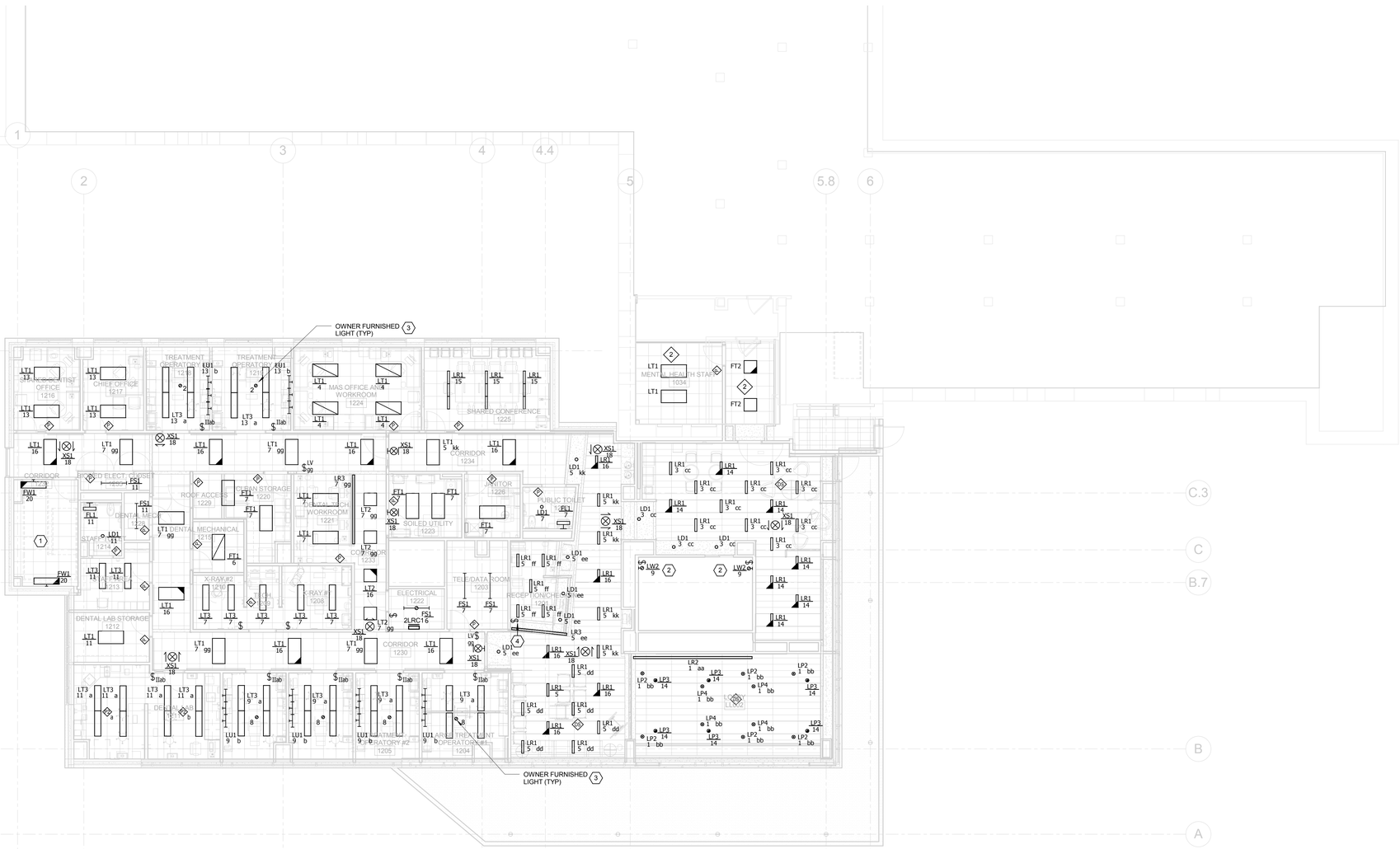

3F LEVEL 01 LIGHTING PLAN
1/8" = 1'-0"

NORTH ARROW

CONSTRUCTION DOCUMENTS - FINAL BID DOCUMENTS

Revisions:	Date

CONSULTANTS:

Landmark Engineering Group, Inc.
Civil Engineer
2834 104th Street
Urbandale, IA 50322
515.221.1322

Gateway Geotechnical, LLC
Geotechnical Engineer
17736 Edison Avenue
Chesterfield, MO 63005
636.532.7747

SWT Design
Landscape Architect
7722 Big Bend Boulevard
St. Louis, MO 63119
314.644.5700

Hinman Consulting Engineers, Inc
Physical Security
One Bush Street, Suite 510
San Francisco, CA 94104
415.621.4423

The Schachinger Group
Elevator
4255 Stoney Creek Drive
Fort Collins, CO 80525
703.608.2283

SidePlate
Steel Frame
25909 Pala, Ste 200, 92691
Mission Viejo, CA
949.305.7889

ARCHITECT/ENGINEERS:

CANNONDESIGN

© CannonDesign 2014
All rights reserved. No part of this document may be reproduced or utilized in any form, without prior written authorization by The Cannon Corporation.

Drawing Title: **LEVEL 01 LIGHTING PLAN**

Approved: Project Director

Project Title: **John J. Pershing VAMC Clinical & Urgent Care Addition**

Location: **Poplar Bluff, Missouri**

Date: **DEC 14, 2015** | Checked: **TZ** | Drawn: **AW/CK**

Project Number: **657-351**
CANNON DESIGN PROJECT NO. 03850.05

Building Number

Drawing Number: **EL-103**
Dwg. of

Office of Construction and Facilities Management

Department of Veterans Affairs

VA FORM 08-6231

BRANCH CIRCUIT NOTES ◇ :

1. EXTEND BRANCH CIRCUITS IN THIS AREA TO THE FOLLOWING BRANCH PANELBOARDS, UNLESS OTHERWISE NOTED:

   120 / 208V PANELBOARDS
   2LNL2 - NORMAL POWER
   1LSL1 - LIFE SAFETY POWER (NEC 517)
   2LCL1 - CRITICAL POWER (NEC 517)

2. REWORK EXISTING BRANCH CIRCUITS TO NEW FIXTURES AS SHOWN. PROVIDE NEW SWITCHING DEVICE AS SHOWN.

GENERAL NOTES :

A.
WIRE LUMINAIRES TAGGED WITH SINGLE LETTER DESIGNATOR (FOR EXAMPLE 'a') THRU LOCAL SWITCH OR OCCUPANCY SENSOR SHOWN. WIRE LUMINAIRES TAGGED DOUBLE LETTER DESIGNATOR (FOR EXAMPLE 'bb') THRU CENTRAL RELAY PLANEL '2LRC1'.

KEYED NOTES ⬡ :

1.
WIRE FW1 LUMINAIRE IN STAIRWELL TO COMMON STAIRWELL CIRCUIT.

2.
LW2 LOCATED AT TOP OF ELEVATOR SHAFT. COORDINATE LUMINAIRE AND SWITCH LOCATION WITH THE ELEVATOR INSTALLER: WIRE FIXTURES THROUGH COMMON CIRCUIT FED FROM LOWER LEVEL PANEL, 1LCL1.

3.
NOT USED UNDER BID ALTERNATE 1.

4.
LOW VOLTAGE OVERRIDE SWITCHES FOR RELAYS aa, bb, cc, dd, ee, ff AND kk.

5.
CHAIN MOUNT FIXTURE TO STRUCTURE 10' AFF. WIRE THROUGH SWITCHES AT EACH DOOR AS SHOWN TO SPARE RELAY IN '2LRC1' PROGRAM TO SCHEDULE 5. TYPICAL. REFER TO EL-502.

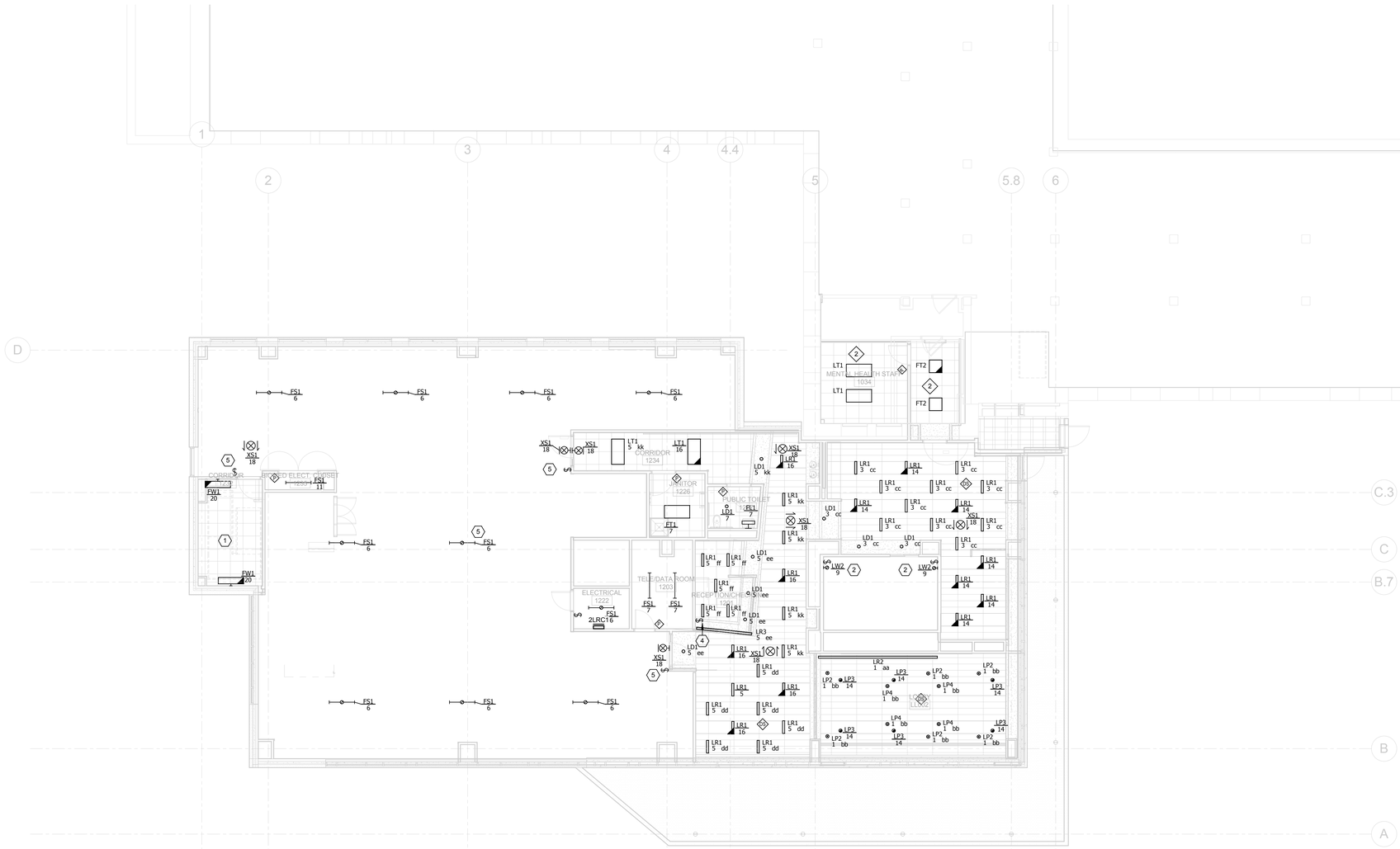

4F LEVEL 0 1LIGHTING PLAN
1/8" = 1'-0"

CONSTRUCTION DOCUMENTS - FINAL BID DOCUMENTS

Revisions:	Date

CONSULTANTS:

Landmark Engineering Group, Inc.
Civil Engineer
2834 104th Street
Urbandale, IA 50322
515.221.1322

Gateway Geotechnical, LLC
Geotechnical Engineer
17736 Edison Avenue
Chesterfield, MO 63005
636.532.7747

SWT Design
Landscape Architect
7722 Big Bend Boulevard
St. Louis, MO 63119
314.644.5700

Hinman Consulting Engineers, Inc
Physical Security
One Bush Street, Suite 510
San Francisco, CA 94104
415.621.4423

The Schachinger Group
Elevator
4255 Stoney Creek Drive
Fort Collins, CO 80525
703.608.2263

SidePlate
Steel Frame
25909 Pala, Ste 200, 92691
Mission Viejo, CA
949.305.7889

ARCHITECT/ENGINEERS:

CANNONDESIGN

© CannonDesign 2014
All rights reserved. No part of this document may be reproduced or utilized in any form, without prior written authorization by The Cannon Corporation.

Drawing Title
LEVEL 01 LIGHTING PLAN - BID ALTERNATE 1

Approved: Project Director

Project Title
John J. Pershing VAMC Clinical & Urgent Care Addition

Location
Poplar Bluff, Missouri

Date **DEC 14, 2015** | Checked **TZ** | Drawn **AW**

Project Number
657-351
CANNON DESIGN PROJECT NO. 03850.05

Building Number

Drawing Number
EL-103A
Dwg. of

Office of Construction and Facilities Management
Department of Veterans Affairs

VA FORM 08-6231

BRANCH CIRCUIT NOTES ◇ :

1. EXTEND BRANCH CIRCUITS IN THIS AREA TO THE FOLLOWING BRANCH PANELBOARDS, UNLESS OTHERWISE NOTED:

   120 / 208V PANELBOARDS
   2LNL2 - NORMAL POWER
   1LSL1 - LIFE SAFETY POWER (NEC 517)
   2LCL1 - CRITICAL POWER (NEC 517)

GENERAL NOTES :

A.
WIRE LUMINAIRES TAGGED WITH SINGLE LETTER DESIGNATOR (FOR EXAMPLE 'a') THRU LOCAL SWITCH OR OCCUPANCY SENSOR SHOWN. WIRE LUMINAIRES TAGGED DOUBLE LETTER DESIGNATOR (FOR EXAMPLE 'bb') THRU CENTRAL RELAY PLANEL '2LRC1'.

KEYED NOTES ⬡ :

1.
WIRE LIFE SAFETY LUMINAIRES THRU EM LIGHTING CONTACTOR, ELC-1. SEE DETAIL 6F/EL-501. PROVIDE PHILLIPS BODINE GTD BALLAST OR EQUAL FOR THIS FIXTURE. PROVIDE UNSWITCHED CONNECTION TO NORMAL POWER CIRCUIT SERVING AREA TO SENSE LOSS OF NORMAL POWER.

2.
WIRE OBSTRUCTION LIGHT FIXTURES, H1, TO CIRCUIT SHOWN FROM LIFE SAFETY PANEL THRU EM LIGHTING CONTACTOR, ELC-2. SEE DETAIL EL-501.

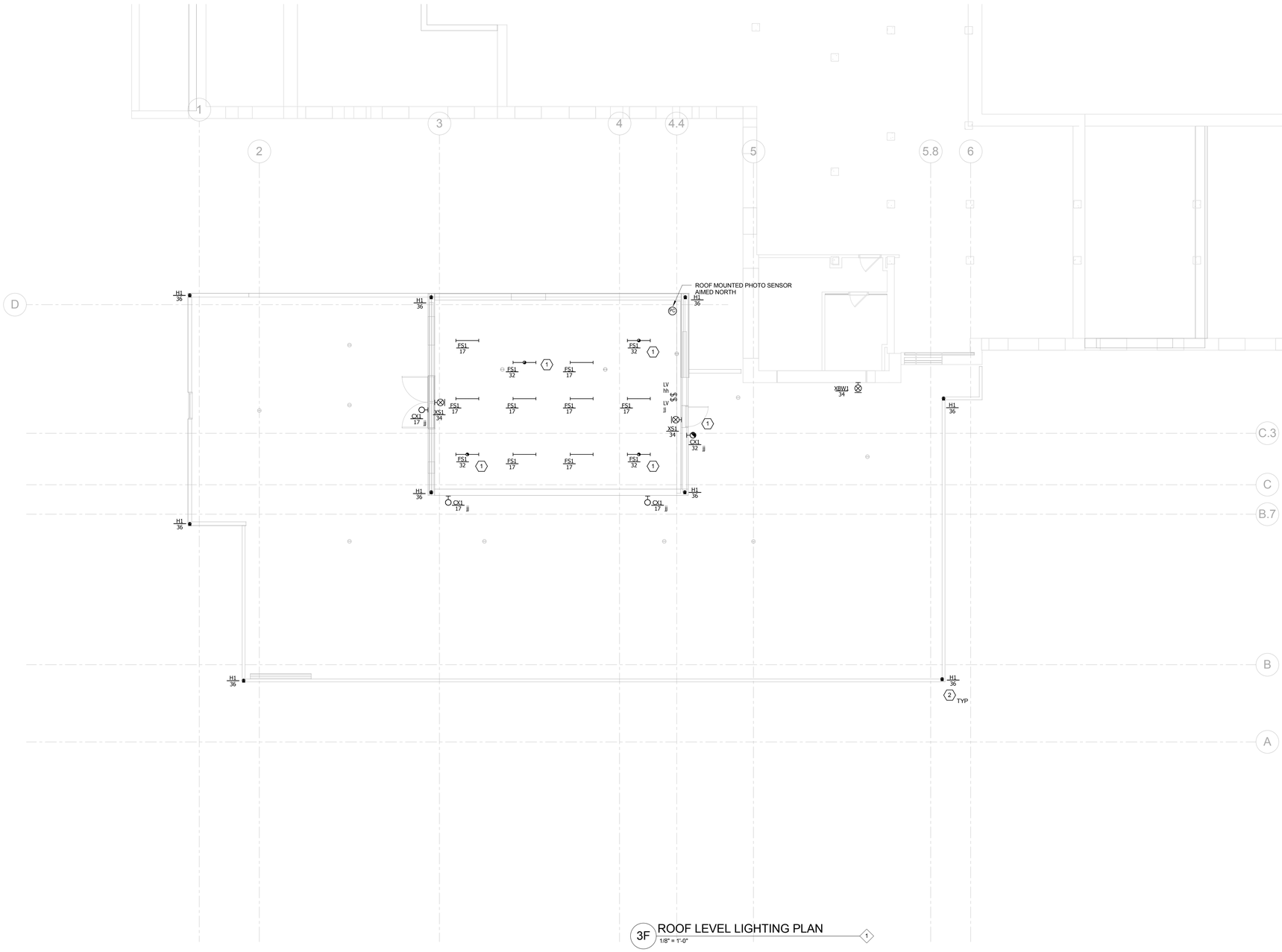

3F ROOF LEVEL LIGHTING PLAN
1/8" = 1'-0"

NORTH ARROW

CONSTRUCTION DOCUMENTS - FINAL BID DOCUMENTS

Revisions:	Date

CONSULTANTS:

Landmark Engineering Group, Inc.
Civil Engineer
2834 104th Street
Urbandale, IA 50322
515.221.1322

Gateway Geotechnical, LLC
Geotechnical Engineer
17736 Edison Avenue
Chesterfield, MO 63005
636.532.7747

SWT Design
Landscape Architect
7722 Big Bend Boulevard
St. Louis, MO 63119
314.644.5700

Hinman Consulting Engineers, Inc
Physical Security
One Bush Street, Suite 510
San Francisco, CA 94104
415.621.4423

The Schachinger Group
Elevator
4255 Stoney Creek Drive
Fort Collins, CO 80525
703.608.2263

SidePlate
Steel Frame
25909 Pala, Ste 200, 92691
Mission Viejo, CA
949.305.7889

ARCHITECT/ENGINEERS:

CANNONDESIGN

© CannonDesign 2014
All rights reserved. No part of this document may be reproduced or utilized in any form, without prior written authorization by The Cannon Corporation.

Drawing Title: **ROOF LEVEL LIGHTING PLAN**

Approved: Project Director

Project Title: **John J. Pershing VAMC Clinical & Urgent Care Addition**

Location: **Poplar Bluff, Missouri**

Date: **DEC 14, 2015** | Checked: **TZ** | Drawn: **AW/CK**

Project Number: **657-351**
CANNON DESIGN PROJECT NO. 03850.05

Building Number

Drawing Number: **EL-104**
Dwg. of

Office of Construction and Facilities Management

Department of Veterans Affairs

VA FORM 08-6231

NETWORKED LOW VOLTAGE CONTROL SCHEDULE

Cabt/Panel ID: 1LRC1
Location: ELEC LL006

Relay #	Branch Circuit Panel	Ckt. #	ID	Controlled Load Space/Area/Luminaire Tag	Control Schedule	Notes	Aux. Control
R1	1LNL2	1	aa	LOBBY LL002	SCH-2	1,2,3	LV
R2	1LNL2	3	bb	WAITING LL007	SCH-4	1,2,3,4	LV, DS
R3	1LNL2	3	cc	RECEPTION LL007	SCH-2	1,2,3	LV
R4	1LNL2	3	dd	RECEPTION LL007	SCH-2	1,2,3	LV
R5	1LNL2	3	ee	RECEPTION LL007	SCH-2	1,2,3	LV
R6	1LNL2	3	ff	CORRIDOR LL040, LL045	SCH-2	1,2,3	LV
R7	1LNL2	11	gg	WAITING G090	SCH-2	1,2,3	LV
R8	1LNL2	9	hh	EXTERIOR ENTRY	SCH-6		PC
R9	1LNL2	3	jj	RECEPTION LL007	SCH-2	1,2,3	LV
R10	1LNL2	1	kk	ENTRY VESTIBULE LL001	SCH-4	1,2,3,4	LV, DS
R11	1LNL2	13	-	EMERGENCY LIGHTING CONTACTOR -ELC-1	SCH-6	5	PC
R12	1LNL3	15	aa	PARKING LOT LIGHTING - A	SCH-7	1	PC
R13	1LNL4	17	bb	PARKING LOT LIGHTING - B	SCH-6	1	PC
R14	1LNL2	13	-	EMERGENCY LIGHTING CONTACTOR -ELC-2	SCH-6	5	PC
R15				SPARE			
R16				SPARE			
R17				SPARE			
R18				SPARE			
R19				SPARE			
R20				SPARE			
R21				SPARE			
R22				SPARE			
R23				SPARE			
R24				SPARE			

Cabt/Panel ID: 2LRC1
Location: ELEC 1222

Relay #	Branch Circuit Panel	Ckt. #	ID	Controlled Load Space/Area/Luminaire Tag	Control Schedule	Notes	Aux. Control
R1	2LNL2	1	aa	LOBBY LL002	SCH-1	1,2,3	LV
R2	2LNL2	1	bb	LOBBY LL002	SCH-3	1,2,3,4	LV, DS
R3	2LNL2	3	cc	WAITING	SCH-3	1,2,3,4	LV, DS
R4	2LNL2	5	dd	RECEPTION 1201	SCH-3	1,2,3,4	LV, DS
R5	2LNL2	5	ee	RECEPTION 1201	SCH-1	1,2,3	LV
R6	2LNL2	5	ff	RECEPTION 1201	SCH-1	1,2,3	LV
R7	2LNL2	7	gg	CORRIDOR 1230	SCH-1	1,2,3	LV
R8	2LNL2	17	hh	MECHANICAL PENTHOUSE	SCH-5		LV
R9	2LNL2	17	jj	ROOF	SCH-5	1,2,3	LV
R10	2LNL2	5	kk	RECEPTION 1201	SCH-1	1,2,3	LV
R11				SPARE			
R12				SPARE			
R13				SPARE			
R14				SPARE			
R15				SPARE			
R16				SPARE			
R17				SPARE			
R18				SPARE			
R19				SPARE			
R20				SPARE			
R21				SPARE			
R22				SPARE			
R23				SPARE			
R24				SPARE			

Design Schedules: (For bidding purposes only. Final scheduling shall be reviewed, approved, changed, &/or amended by Owner/Client)

	Day(s)	ON	OFF	Control Features
SCH-1	M-F	7am	6pm	Override via local manual override switches
	SAT	8am	1pm	
	SUN/HOL		24 hrs	
SCH-2	M-F	6am	12am	Override via local manual override switches
	SAT	6am	12am	
	SUN/HOL	6am	12am	
SCH-3	M-F	7am	6pm	ON override during scheduled ON hours via daylight sensing control. OFF override via local override sw's.
	SAT	8am	1pm	
	SUN/HOL		24 hrs	
SCH-4	M-F	6am	12am	ON override during scheduled ON hours via daylight sensing control. OFF override via local override sw's.
	SAT	6am	12am	
	SUN/HOL	6am	12am	
SCH-5	M-F	-	-	Manual ON - 4 hour sweeps OFF
	SAT	-	-	
	SUN/HOL	-	-	
SCH-6	M-F	PC	PC	
	SAT	PC	PC	
	SUN/HOL	PC	PC	
SCH-7	M-F	PC	12am	
	SAT	PC	12am	
	SUN/HOL	PC	12am	

Abbreviations:

LV	Manual Low Voltage Override Switch
OS	Occupancy Sensing Device
PC	Photocell/Photoelectric Control
TS	Time Switch
DS	Daylight Sensor - ON/OFF
DH	Daylight Harvesting System Sensor - For dimmed control
FA	Fire Alarm System Interface

Notes:

1. Time control/schedule via internal panel clock
2. ON/OFF blink warning prior to scheduled OFF time.
3. Multiple timed OFF sweeps @ 2 hour intervals during OFF schedule
4. ON override via daylight harvesting sensor, when daylight provides greater than 5FC at the perimeter zone.
5. Emergency lighting contactor control voltage. Open relay (control power OFF) to turn lights ON; close relay (control power ON) to turn lights OFF.

KEYED NOTES

1. PROVIDE 120V POWER CONNECTION FOR CONTROL AT THE RELAY CABINET.
2. RELAY CONTROLLED CIRCUITS FROM 120V POWER PANEL.
3. RELAY CONTROLLED CIRCUITS FROM RELAY PANEL OUT TO LIGHT FIXTURE GROUPS.
4. LOW VOLTAGE OVERRIDE SWITCH (TYPICAL).
5. TRUNK RISER - 3/4" MINIMUM.

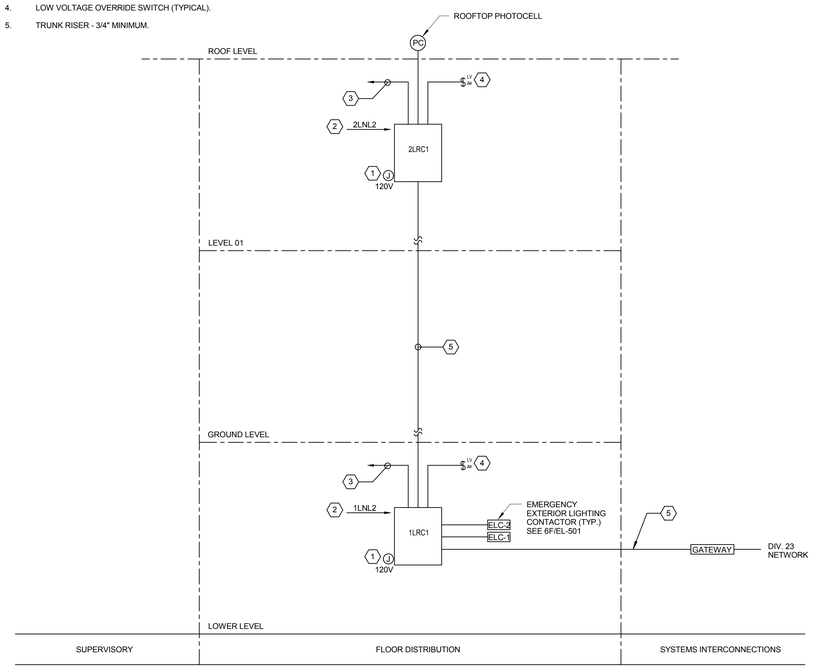

3F NETWORKED LOW VOLTAGE CONTROL EQUIPMENT TRUNK RISER

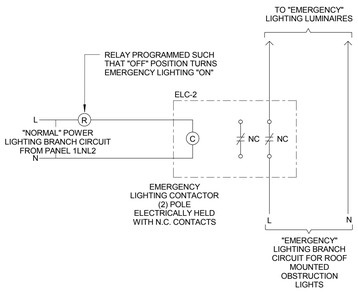

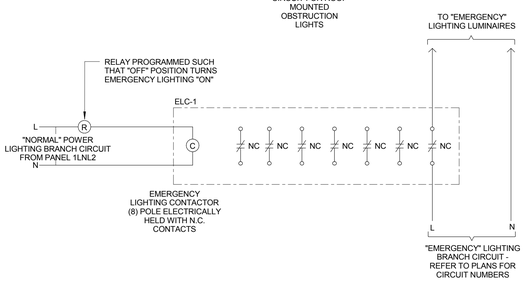

SEQUENCE OF OPERATION:

PREMISE:
FAIL SAFE RELAY SHOWN.

ALL RELAYS IN THE ON POSITION:
ALL LIGHTING (BOTH NORMAL & EMERGENCY) IS "ON", BECAUSE THE FAIL SAFE EMERGENCY LIGHTING RELAY (PROGRAMMED BACKWARD) IS KEEPING THE EMERGENCY CONTACTOR HOLDING COIL DE-ENERGIZED, THEREFORE THE NORMALLY CLOSED CONTACTS ARE CLOSED, & THE EMERGENCY LIGHTING IS "ON".

ALL RELAYS IN THE OFF POSITION:
ALL LIGHTING (BOTH NORMAL & EMERGENCY) IS "OFF". BECAUSE THE FAIL SAFE EMERGENCY LIGHTING RELAY (PROGRAMMED BACKWARD) IS KEEPING THE EMERGENCY LIGHTING CONTACTOR HOLDING COIL ENERGIZED, THEREFORE THE NORMALLY CLOSED CONTACTOR CONTACTS ARE OPEN, & THE EMERGENCY LIGHTING IS "OFF".

UPON LOSS OF NORMAL POWER:
"NORMAL" LIGHTING GOES "OFF". IF NOT ALREADY "OFF", LOSS OF EMERGENCY LIGHTING CONTACTOR HOLDING COIL CIRCUIT CAUSES CONTACTOR CONTACTS TO CLOSE, THEREBY TURNING EMERGENCY LIGHTING "ON".

UPON RETURN OF NORMAL POWER:
DEPENDING UPON RELAY POSITIONS, LIGHTING WILL REVERT TO ON/OFF STATE PRIOR TO LOSS OF POWER.

6F SINGLE CONTROL FAIL SAFE EMERGENCY LIGHTING WIRING SCHEMATIC

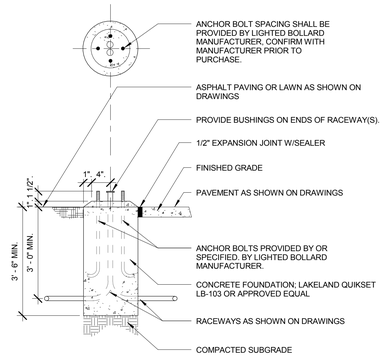

4D ROUND LIGHTED BOLLARD FOUNDATION - LX1

KEYED NOTES:

1. TOP OF CONCRETE FOUNDATION. (TROWEL SMOOTH AND LEVEL)
2. CONCRETE SHALL BE 3000 P.S.I. @ 28 DAYS. CONCRETE SHALL BE VIBRATED.
3. VERIFY OPENING SIZE IN POLE BASE PLATE PRIOR TO SETTING CONDUIT SLEEVES.
4. EXTEND CONDUITS 12" ABOVE TOP OF FORM. TERMINATE CONDUITS WITH INSULATED THROAT BUSHINGS.
5. POLE: SHALL BE PROVIDED WITH ALL ANCHOR BOLTS, NUTS, WASHERS, INSTALLATION TEMPLATES, ETC., REQ'D FOR INSTALLATION.POLE FINISH SHALL BE POLYESTER POWDER COAT, ELECTROSTATICALLY APPLIED OVER CORROSION RESISTANT UNDERCOAT, COLOR AS SELECTED BY ARCHITECT. REFER TO LUMINAIRE SCHEDULE.

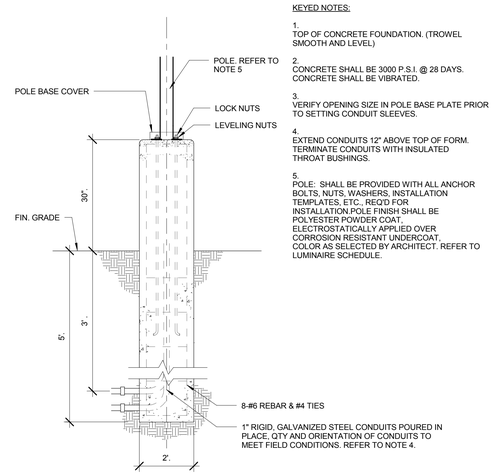

4F LIGHTING POLE FOUNDATION DETAIL - LX3 / LX4

CONSTRUCTION DOCUMENTS - FINAL BID DOCUMENTS

Revisions: | Date

CONSULTANTS:

Landmark Engineering Group, Inc.
Civil Engineer
2834 104th Street
Urbandale, IA 50322
515.221.1322

Gateway Geotechnical, LLC
Geotechnical Engineer
17736 Edison Avenue
Chesterfield, MO 63005
636.532.7747

SWT Design
Landscape Architect
7722 Big Bend Boulevard
St. Louis, MO 63119
314.644.5700

Hinman Consulting Engineers, Inc
Physical Security
One Bush Street, Suite 510
San Francisco, CA 94104
415.621.4423

The Schachinger Group
Elevator
4255 Stoney Creek Drive
Fort Collins, CO 80525
703.608.2263

SidePlate
Steel Frame
25909 Pala, Ste 200, 92691
Mission Viejo, CA
949.305.7889

ARCHITECT/ENGINEERS:

CANNONDESIGN

© CannonDesign 2014
All rights reserved. No part of this document may be reproduced or utilized in any form, without prior written authorization by The Cannon Corporation.

Drawing Title: **LIGHTING DETAILS**

Approved: Project Director

Project Title: **John J. Pershing VAMC Clinical & Urgent Care Addition**

Location: **Poplar Bluff, Missouri**

Date: **DEC 14, 2015** | Checked: **TZ** | Drawn: **AW/CK**

Project Number: **657-351**
CANNON DESIGN PROJECT NO. 03850.05

Building Number

Drawing Number: **EL-501**
Dwg. of

Office of Construction and Facilities Management

Department of Veterans Affairs

VA FORM 08-6231

LUMINAIRE SCHEDULE

TAG	DESCRIPTION	INSTALLATION METHOD	DEPTH	LAMP SPEC	LAMP QTY	BALLAST SPEC	BALLAST VOLT	INPUT WATTS	SHIELDING/OPTICS	FEATURES/OPTIONS	REFERENCED PRODUCTS	NOTES
CX1	EXTERIOR SCONCE	SURFACE	4"	LED 2000 lm	-	N/A	120V	24	TYPE III DISTRIBUTION ;	DIE-CAST SINGLE PIECE ALUMINUM HOUSING, TEMPERED GLASS LENS, FULLY GASKETED DOOR FRAME.	LITHONIA - WST SERIES GARDCO - 101 SERIES METALUX - IST SERIES OR APPROVED EQUAL	
FL1	LINEAR FLUORESCENT	SURFACE	<4"	F025/T5 MINI BI-PIN	1	ELEC/T5	120V	24	TRIPLEX BLOWN GLASS, REMOVABLE ALUMINUM ENDS FOR RELAMPING	2'-0" LENGTH	EUREKA - ELEMENT 3530 SERIES LITHONIA - CYLV OR APPROVED EQUAL	
FS1	4' CHANNEL STRIP	SURFACE/ SUSPEND PER PLANS	3"	F032/T8	2	ELEC/T8	120V	58	NONE	DIE-FORMED COLD ROLLED STEEL HOUSING, HIGH GLOSS BAKED WH ENAMEL FINISH, UL DAMP LOCATION, PROVIDE CHAIN HANGERS WHERE SUSPENDED	COLUMBIA - CS SERIES DAY-BRITE - T SERIES METALUX - SSF SERIES LIGHTOLIER - SW SERIES LITHONIA - C SERIES WILLIAMS - 76 SERIES	
FT1	2X4 LENSED TROFFER	RECESSED	≤ 6 IN	F032/T8	2	ELEC/T8	120V	58	PATTERN 19 LENS	RECESSED ALUMINUM DOOR - STATIC	COLUMBIA - 4PS SERIES DAY-BRITE - DESIGNER STATIC SERIES METALUX - OC SERIES LIGHTOLIER - SPS SERIES LITHONIA - SP SERIES WILLIAMS - 50 SERIES	
FW1	4'-0" FLUORESCENT	SURFACE		F032/T8	2	ELEC/T8	120V	58	CLEAR ACRYLIC LENS	20 GAUGE, DIE FORMED WELDED STEEL HOUSING	WILLIAMS - 29 SERIES METALUX - BAU SERIES OR APPROVED EQUAL	
LD1	6" ROUND OPEN APERTURE-LED DOWNLIGHT	RECESSED	-	LED 1100 lm 4000K	-	N/A	120V		REMOTE PHOSPHOR, LIGHT ENGINE UPPER-LOW IRIDESCENT SEMI-SPECULAR, CLEAR SELF FLANGING DOWNLIGHT TRIM	SHEET METAL FRAME IN HOUSING-UL DAMP LOCATION	LIGHTOLIER - CALCULITE (C6L") SERIES OMEGA - OM"-LED SERIES OR APPROVED EQUAL	
LD2	4" ROUND OPEN APERTURE-LED DOWNLIGHT	RECESSED	-	LED 500 lm 4000K	-	N/A	120V		REMOTE PHOSPHOR, LIGHT ENGINE UPPER-LOW IRIDESCENT, SEMI-SPECULAR, CLEAR SELF FLANGING DOWNLIGHT TRIM	SHEET METAL FRAME IN HOUSING	LIGHTOLIER - CALCULITE (C4L") SERIES OMEGA - OM"-LED SERIES OR APPROVED EQUAL	
LD3	6" ROUND LENSED DOWNLIGHT	RECESSED	-	LED 900 lm 4000K	-	N/A	120V	25	WET LOCATION, WHITE FRESNEL LENS	SHEET METAL FRAME IN HOUSING, 5-3/4" MAX HEIGHT	LITHONIA DOM6 LED OR APPROVED EQUAL	
LP2	PENDANT	PENDANT		LED 4000K 2988 lm	-	N/A	120V	54	MATTE WHITE ACRYLIC DIFFUSER	6" DIAMETER, 2'-0" LENGTH	DELRAY - 6300 SERIES OR APPROVED EQUAL	3
LP3	PENDANT	PENDANT		LED 4000K 4483 lm	-	N/A	120V	81	MATTE WHITE ACRYLIC DIFFUSER	6" DIAMETER, 3'-0" LENGTH	DELRAY - 6300 SERIES OR APPROVED EQUAL	3
LP4	PENDANT	PENDANT		LED 4000K 5976 lm	-	N/A	120V	108	MATTE WHITE ACRYLIC DIFFUSER	6" DIAMETER, 4'-0" LENGTH	DELRAY - 6300 SERIES OR APPROVED EQUAL	3
LR1	2'-0" LINEAR	RECESSED		LED 4000K 375 lm/ft	-	N/A	120V	17		2'-0" LENGTH, FLUSH SATIN LENS	FOCAL POINT - SEEM 4 AXIS BEAM 4 OR APPROVED EQUAL	
LR2	CONTINUOUS LINEAR	RECESSED		LED 4000K 500 lm/ft	-	N/A	120V	32	MEDIUM OUTPUT, 4-0" LENGTH	WHITE, STEEL HOUSING	LITECONTROL - 6000 OR APPROVED EQUAL	
LR3	LED ACCENT LIGHT	RECESSED		LED 4000K 137lm/ft	-	N/A	120V	20	FROSTED DIFFUSER LENS, STANDARD OUTPUT, NON-DIM POWER SUPPLY	SILVER FINISH, NARROW, SHALLOW PROFILE HOUSING	AION LED - A-TRACK OR APPROVED EQUAL	1
LT1	2x4 TROFFER	RECESSED	4"	LED 4000K 4000lm	-	N/A	120V	44		ONE PIECE 20 GAUGE STEEL REFLECTOR AND HOUSING.	FOCAL POINT - LUNA SERIES METALUX - ENCOUNTER OR APPROVED EQUAL	
LT2	2x2 TROFFER	RECESSED	4"	LED 4000K 2500 lm	-	N/A	120V	37		ONE PIECE 20 GAUGE STEEL REFLECTOR AND HOUSING.	FOCAL POINT - LUNA SERIES METALUX - ENCOUNTER OR APPROVED EQUAL	
LT3	1x4 TROFFER	RECESSED	4"	LED 4000K 2500lm	-	N/A	120V	38		ONE PIECE 20 GAUGE STEEL REFLECTOR AND HOUSING.	FOCAL POINT - LUNA SERIES METALUX - ENCOUNTER OR APPROVED EQUAL	
LW2	UTILITY LUMINAIRE WITH GLOBE AND GUARD	SURFACE/ SUSPEND PER PLANS	10"	LED 5000K	-	N/A	120V	20	HEAVY DUTY PRISMATIC GLASS GLOBE	DIE CAST ALUMINUM HOUSING, GRAY FINISH, UL WET LOCATION, INTEGRAL JUNCTION BOX	HUBBELL - LED V SERIES PHOENIX-VA-W-13 SERIES OR APPROVED EQUAL	
LU1	LED UNDER CABINET TASK LIGHTING LUMINAIRE	SURFACE-UNDER MILLWORK CABINETRY		LED 4000K NOT < 30LM/W	-	N/A	120V	6W/FT	110"X110" BEAM ANGLE LED LENS-CLEAR, RADIUSED, POLY-CARBONATE LENS, CONFORMING TO HOUSING SHAPE	LOW PROFILE, ≤1"H X ≤2"W, ALUM. HSG-WHITE PPC FINISH-INDIVIDUAL LENGTHS AS REQ'D PER MILLWORK DIMENSIONS; PROVIDE WITH INTEGRAL ROCKER SWITCH	COLOR KINETICS - eW PROFILE SER. ALKCO - "ARIS" SERIES OR APPROVED EQUAL	
H1	OBSTRUCTION HAZARD LIGHT			LED	-	N/A	120V	4.5	FAA L810 STEADY-BURNING OBSTRUCTION LIGHT	SINGLE HEAD, BASE MOUNTED	POINT LIGHTING CORP. - LED V4 CROUSE HINDS - RT SERIES FLIGHT LIGHT - L810 LED	
LX1	EXTERIOR BOLLARD			LED 4000K ~1100lm	-	N/A	120V	16	2L35 LIGHT ENGINE	3 FEET, SILVER FINISH, FLAT TOP	SELUX - BRMFL SERIES HEW - OSABR SERIES OR APPROVED EQUAL	
LX2	EXTERIOR STEPLIGHT			LED 4000K	-	N/A	120V	5	3.4W,	FLAT DIFFUSER, INTEGRAL POWER SUPPLY	BEGA 2190 LED REBELLE 2400 LED OR APPROVED EQUAL	
LX3	EXTERIOR PARKING			LED 4000K	-	N/A	120V	101	5700K, TYPE III DISTRIBUTION		MATCH EXISTING STANDARD CREE XSP SERIES	
LX4	EXTERIOR PARKING			LED 4000K	-	N/A	120V	101	5700K, TYPE V DISTRIBUTION		MATCH EXISTING STANDARD CREE XSP SERIES	
LX3 / LX4 POLE	EXTERIOR LIGHT POLE				-				SQUARE STEEL STRAIGHT POLE		BETA LIGHTING INC. PS4517C	
XBW1	ILLUMINATED "EXIT" SIGN OUTDOOR WEATHERPROOF AC/DC TYPE	CEILING, WALL OR END MTD AS SHOWN		LED	≤ 5W PER FACE		120/ 277V		WHITE POLYCARB. "EXIT" STENCIL(S)-RED LETTERS-WRAPAROUND, INJECTION MOLDED, CLEAR, WP POLYCARBONATE SHIELD	DIE-CAST ALUMINUM HOUSING-NEMA 4X-PPC-COLOR AS SEL.-TAMPER RESISTANT SCREWS-UL LISTED 924 WET LOCATION	DUAL-LITE - "SEMPRA" SCWLE SERIES FAIL-SAFE - XLH EBP SERIES LITHONIA - "SEVERE" LV EL N SERIES McPHILBEN - ERBDML LINE MAX OR EQUIVALENT	
XS1	ILLUMINATED "EXIT" SIGN-AC/DC TYPE	CEILING, WALL, PENDANT, AS SHOWN		LED	≤ 5W PER FACE	-	120V	3	STENCIL CUT, CODE SIZE "EXIT" LETTERS & DIRECTIONAL CHEVRON(S)-RED ACRYLIC SHEET BACKING	FIRE RETARDT. THERMO-PLASTIC HOUSING-SINGLE/DOUBLE FACE-WITH CHEVRONS AS SHOWN-MATTE WHITE FINISH	CHLORIDE - "SYMMETRY /" SERIES DUAL-LITE - "LITEFORMS" LX SERIES JUNO - NAVILITE - NXPB SERIES LITHONIA - "BRITEWAY" BWE ELN McPHILBEN - VE EM SERIES SURE-LITES - LPXT SERIES	

GENERAL NOTES:

A REFERENCED PRODUCTS ARE INCLUDED HEREIN, OF MANUFACTURERS & PRODUCTS, THAT GENERALLY CONFORM TO THE LUMINAIRE DESIGN INTENTS ESTABLISHED HEREIN, & IN THE PROJECT MANUAL. EQUIVALENT PRODUCTS BY OTHER MANUFACTURERS MAY BE CONSIDERED, PRIOR TO BID.

B DETERMINE SPECIFIC LUMINAIRE PART NUMBERS BASED ON THE REFERENCED PRODUCT SERIES, WRITTEN DESCRIPTIONS & PROJECT MANUAL SPECIFICATIONS.

C INCLUSION HEREIN OF MANUFACTURER'S SERIES &/OR MODEL NUMBERS DOES NOT IMPLY UNCONDITIONAL PRODUCT APPROVAL - MANUFACTURER'S STANDARD PRODUCTS MAY REQUIRE CUSTOM MODIFICATIONS TO MEET THE REQUIREMENTS SPECIFIED HEREIN & IN THE PROJECT MANUAL.

D LISTED SIZES, LAMPING, & TYPES OF LUMINAIRES MAY NOT BE AVAILABLE FROM ANY GIVEN MANUFACTURER OR SERIES.

E ALERT CONTRACTING OFFICER TO DISCREPANCIES PRIOR TO BID.

ABBREVIATIONS:

CONC	CONCRETE	LG	LAY-IN GRID	PL	PLASTER	SPEC	SPECULAR	WH	WHITE
DW	DRYWALL	LO-IRI	LOW IRRIDESCENT	PPC	POLYESTER POWER COAT	S'SPEC	SEMI-SPECULAR		
DI	DIRECT/INDIRECT	NT	NARROW TEE GRID	PRISM	PRISMATIC	SS	STAINLESS STEEL		
ELBD	EMERG. LTG. BYPASS DEVICE	PAF	PAINT AFTER FABRICATION	REFL'T	REFLECTOR/REFLECTANCE	TBS	TO BE SELECTED BY ARCH		
EXP	EXPOSED	PARA	PARABOLIC	SP	SPLINE CEILING SYSTEM	UNIV	UNIVERSAL 120-277VAC		

NOTES:

1 REFER TO ARCHITECTURAL ELEVATIONS FOR EXACT LOCATION AND MOUNTING OF FIXTURE.

2 MOUNT FIXTURE AT 18'-0" AFF.

3 PROVIDE 2'-0" PENDANT STEM.

CONSTRUCTION DOCUMENTS - FINAL BID DOCUMENTS

Revisions: Date

CONSULTANTS:

Landmark Engineering Group, Inc.
Civil Engineer
2834 104th Street
Urbandale, IA 50322
515.221.1322

SidePlate
Steel Frame
25909 Pala, Ste 200, 92691
Mission Viejo, CA
949.305.7889

Gateway Geotechnical, LLC
Geotechnical Engineer
17736 Edison Avenue
Chesterfield, MO 63005
636.532.7747

SWT Design
Landscape Architect
7722 Big Bend Boulevard
St. Louis, MO 63119
314.644.5700

Hinman Consulting Engineers, Inc
Physical Security
One Bush Street, Suite 510
San Francisco, CA 94104
415.621.4423

The Schachinger Group
Elevator
4255 Stoney Creek Drive
Fort Collins, CO 80525
703.608.2263

ARCHITECT/ENGINEERS:

CANNONDESIGN

© CannonDesign 2014
All rights reserved. No part of this document may be reproduced or utilized in any form, without prior written authorization by The Cannon Corporation.

Drawing Title: **LIGHTING SCHEDULE**

Approved: Project Director

Project Title: **John J. Pershing VAMC Clinical & Urgent Care Addition**

Location: **Poplar Bluff, Missouri**

Date: **DEC 14, 2015** | Checked: **TZ** | Drawn: **AW/CK**

Project Number: **657-351**
CANNON DESIGN PROJECT NO. 03850.05

Building Number

Drawing Number: **EL-502**
Dwg. of

Office of Construction and Facilities Management

Department of Veterans Affairs

VA FORM 08-6231

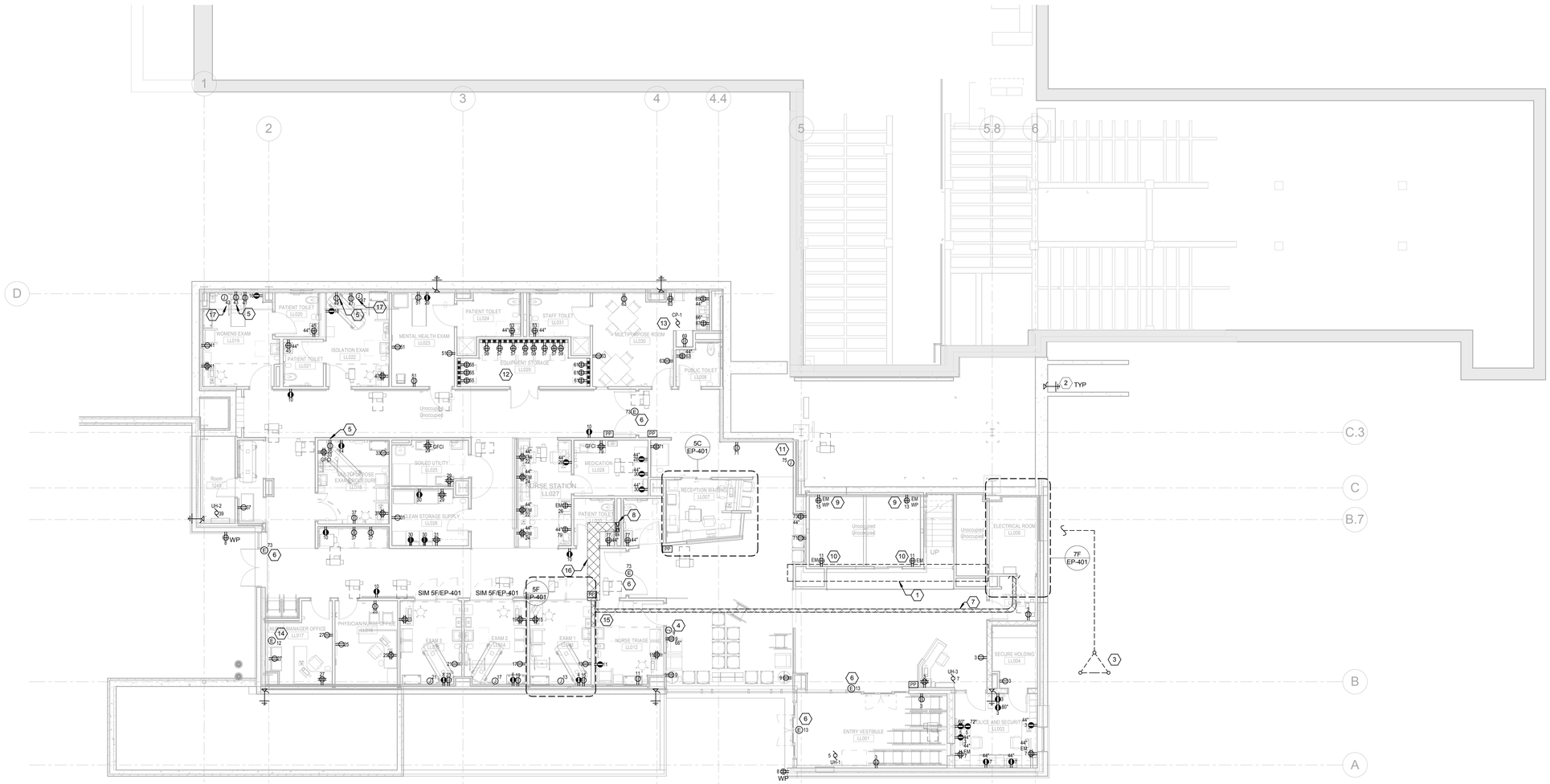

3F LOWER LEVEL POWER PLAN
1/8" = 1'-0"

BRANCH CIRCUIT NOTES ◇ :

1. EXTEND BRANCH CIRCUITS IN THIS AREA TO THE FOLLOWING BRANCH PANELBOARDS, UNLESS OTHERWISE NOTED:

   120 / 208V PANELBOARDS
   1LNL1 - NORMAL POWER
   1LSL1 - LIFE SAFETY POWER (NEC 517)
   1LCL1 - CRITICAL POWER (NEC 517)

GENERAL NOTES :

A.
ALL FINAL ELECTRICAL DEVICE LOCATIONS SHALL BE COORDINATED WITH ARCHITECTURAL ELEVATIONS.

KEYED NOTES ⬡ :

1.
CONDUITS ROUTED THROUGH SOFFIT FROM ELECTRICAL ROOM TO SPACE. TRAPEZE MOUNT CONDUIT BUNDLE FROM STRUCTURE. REFER TO ARCHITECTURAL DRAWING DETAIL 'ELEVATOR DOOR HEAD DETAIL', SHEET AS-411.

2.
LIGHTNING PROTECTION DOWN CONDUCTOR/GROUND ROD LOCATION. CONTRACTOR AND EQUIPMENT VENDOR SHALL COORDINATE FINAL LOCATIONS.

3.
MAIN GROUNDING ELECTRODE GROUNDING GRID. SEE DRAWING EP-601 FOR ADDITIONAL INFORMATION. COORDINATE FINAL LOCATION OF GROUND TRIAD WITH ARCHITECT AND CIVIL ENGINEER.

4.
CONNECTION FOR A CHARGING KIOSK, COORDINATE LOCATION WITH FURNITURE LAYOUT.

5.
PROVIDE CEILING MOUNTED POWER CONNECTION FOR BARIATRIC LIFT COORDINATE EXACT LOCATION WITH FURNITURE LAYOUT IN ROOM.

6.
PROVIDE LIFE SAFETY CONNECTION FOR MOTOR TO AUTOMATIC POWER DOORS TO CIRCUIT SHOWN.

7.
ROUTING FOR (6) FEEDERS, AND (2) 4" COMMUNICATION CONDUITS ROUTED BELOW SLAB IN CONDUIT FROM LOWER LEVEL ELECTRICAL ROOM TO PLUMBING CHASE AS SHOWN. FIELD COORDINATE ELEVATION AND ROUTING WITH OTHER DISCIPLINES MINIMIZING UNNESSECARY BENDS TO COMPLY WITH NEC PULLING REQUIREMENTS.

8.
APPROXIMATE LOCATION OF (6) FEEDERS IN CONDUIT, AND (2) 4" COMMUNICATION CONDUITS TURNED UP FROM PLENUM THROUGH LEVEL ONE FLOOR TO LEVEL ONE ELECTRICAL ROOM. COORDINATE EXACT FIELD LOCATION WITH OTHER DISCIPLINES TO PROVIDE TURN OUT AND PULLBOXES IN LEVEL ONE ELECTRICAL ROOM AS INDICATED ON SINGLE LINE DIAGRAM. REFER TO EP-512 FOR 'CHASE ENTRY DETAIL'.

9.
PROVIDE GFI RECEPTACLE WITH WEATHERPROOF COVER AT SUMP PUMP PIT. COORDINATE EXACT LOCATION WITH ARCHITECTURAL PLANS.

10.
PROVIDE GFI RECEPTACLE ACCESSIBLE AT ELEVATOR DOORWAY. COORDINATE EXACT LOCATION WITH ELEVATOR INSTALLER.

11.
PROVIDE GFI CONNECTION FOR ELECTRIC WATER COOLER. COORDINATE EXACT REQUIREMENTS WITH MANUFACTURER. PROVIDE LOCAL TOGGLE-STYLE DISCONNECT SWITCH FOR HARDWIRED CONNECTION.

12.
WIREMOLD MOUNTING HEIGHT IN THIS SPACE SHALL BE COORDINATED WITH ARCHITECTURAL MOUNTING HEIGHTS. WIREMOLD SHALL HAVE RECEPTACLES SPACED 24" O.C CIRCUITED AS SHOWN.

13.
PROVIDE CONNECTION FOR HOT WATER CIRCULATION PUMP, CP-1, ABOVE CEILING. COORDINATE EXACT LOCATION WITH PLUMBING DRAWINGS.

14.
PROVIDE 30A DISCONNECT SWITCH IN ACCESSIBLE LOCATION ABOVE CEILING FED FROM 20A EPD 30mA GFCI BREAKER IN '1LCL1 FOR AMBULANCE OVERHANG DRAIN HEAT TRACE. COORDINATE EXACT PIPING LOCATION WITH PLUMBING DRAWINGS.

15.
LOCATION FOR (6) FEEDERS IN CONDUIT, AND (2) 4" COMMUNICATION CONDUITS TURNED UP BENEATH SLAB INTO WALL CAVITY TO LOWER LEVEL PLENUM. COORDINATE WITH ALL OTHER DISCIPLINES.

16.
ROUTE (6) FEEDER CONDUITS AND (2) 4" COMMUNICATION CONDUITS THROUGH PLENUM IN BEAM BAY TIGHT TO STRUCTURE ACROSS CORRIDOR TO TURN UP TO LEVEL ONE ELECTRICAL ROOM. REFER TO NOTE 8. COORDINATE ROUTING WITH ALL OTHER DISCIPLINES.

17.
CONNECTION FOR WALL MOUNTED EXAM LIGHT. COORDINATE WITH EQUIPMENT VENDOR.

NORTH ARROW

CONSTRUCTION DOCUMENTS - FINAL BID DOCUMENTS

Revisions:	Date

CONSULTANTS:

Landmark Engineering Group, Inc.
Civil Engineer
2834 104th Street
Urbandale, IA 50322
515.221.1322

Gateway Geotechnical, LLC
Geotechnical Engineer
17736 Edison Avenue
Chesterfield, MO 63005
636.532.7747

SWT Design
Landscape Architect
7722 Big Bend Boulevard
St. Louis, MO 63119
314.644.5700

Hinman Consulting Engineers, Inc
Physical Security
One Bush Street, Suite 510
San Francisco, CA 94104
415.621.4423

The Schachinger Group
Elevator
4255 Stoney Creek Drive
Fort Collins, CO 80525
703.608.2263

SidePlate
Steel Frame
25909 Pala, Ste 200, 92691
Mission Viejo, CA
949.305.7889

ARCHITECT/ENGINEERS:

CANNONDESIGN

© CannonDesign 2014
All rights reserved. No part of this document may be reproduced or utilized in any form, without prior written authorization by The Cannon Corporation.

Drawing Title: **LOWER LEVEL POWER PLAN**

Approved: Project Director

Project Title: **John J. Pershing VAMC Clinical & Urgent Care Addition**

Location: **Poplar Bluff, Missouri**

Date: **DEC 14, 2015** | Checked: **TZ** | Drawn: **AW/CK**

Project Number: **657-351**
CANNON DESIGN PROJECT NO. 03850.05

Building Number

Drawing Number: **EP-101**
Dwg. of

Office of Construction and Facilities Management

Department of Veterans Affairs

VA FORM 08-6231

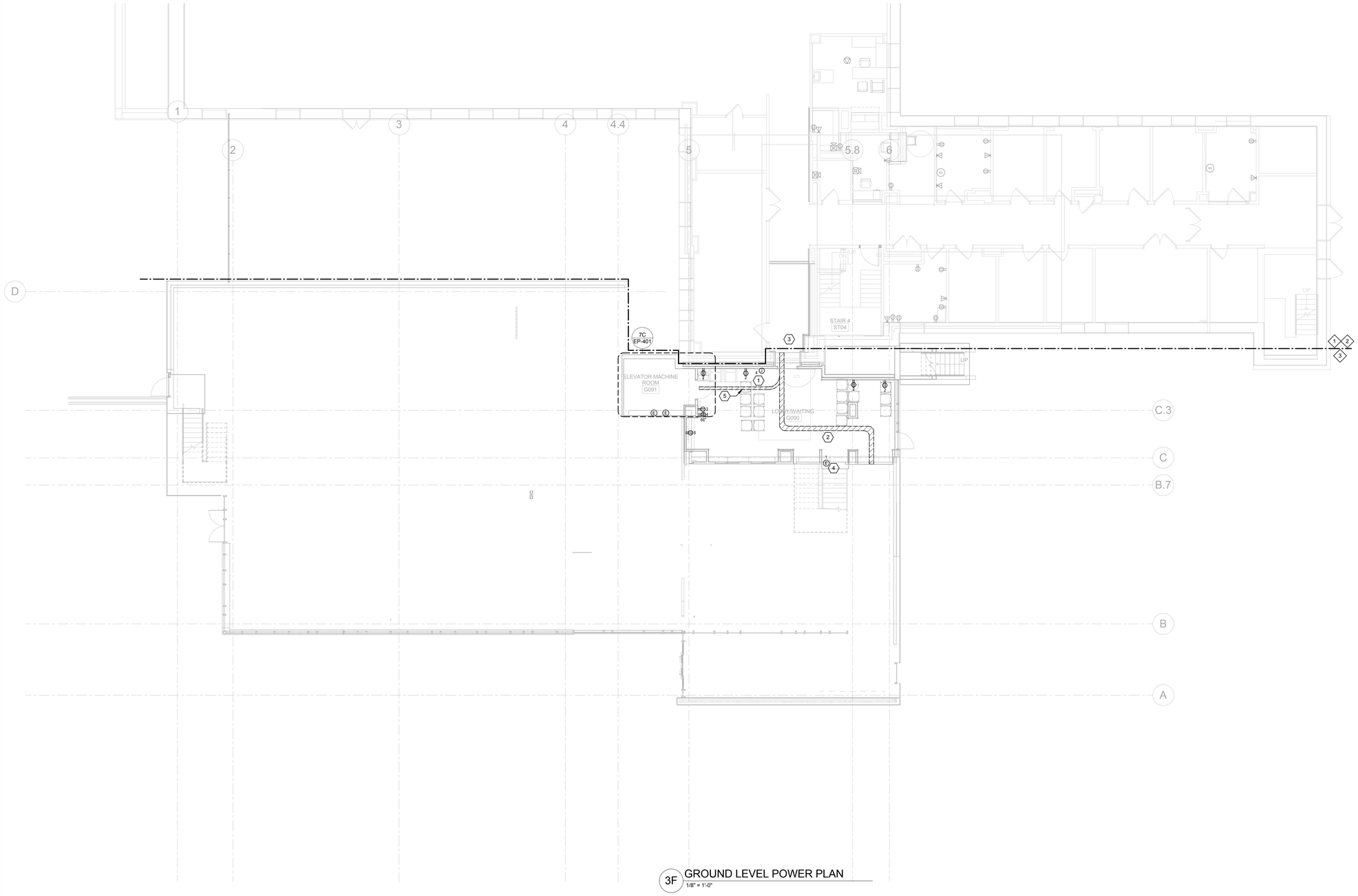

3F GROUND LEVEL POWER PLAN
1/8" = 1'-0"

BRANCH CIRCUIT NOTES ◇:

1. REWORK EXISTING BRANCH CIRCUITS FROM PANELS 'GC' AND 'GA3' TO NEW FIXTURES AS SHOWN. PROVIDE NEW SWITCHING DEVICE AS SHOWN. CIRCUIT NUMBERS SHOWN FOR/DESIGN INTENT, CONFIRM AVAILIBILITY OF EXISTING CIRCUITS.
2. CONNECT TO EXISTING BRANCH CIRCUIT THIS AREA.
3. EXTEND BRANCH CIRCUITS IN THIS AREA TO THE FOLLOWING BRANCH PANELBOARDS, UNLESS OTHERWISE NOTED:

   120 / 208V PANELBOARDS
   1LNL1 - NORMAL POWER
   1LSL1 - LIFE SAFETY POWER (NEC 517)
   1LCL1 - CRITICAL POWER (NEC 517)

GENERAL NOTES :

A.
ALL FINAL ELECTRICAL DEVICE LOCATIONS SHALL BE COORDINATED WITH ARCHITECTURAL ELEVATIONS.

KEYED NOTES ⬡:

1.
CONNECTION FOR A CHARGING KIOSK, COORDINATE LOCATION WITH FURNITURE LAYOUT.

2.
" CONDUIT ROUTING UNDER SLAB FOR (6) FEEDERS AND (2) 4" COMMUNICATION CONDUITS FROM EXISTING CRAWLSPACE TO ELEVATOR MACHINE ROOM (GROUND LEVEL) AND NEW ELECTRICAL ROOM (LOWER LEVEL). ROUTE AND PITCH AS REQUIRED TO ENTER ELECTRICAL ROOM WALL 7'-0" AFF PERPENDICULAR TO WALL FACE. REFER TO ONE-LINE DIAGRAM FOR PANELS SERVED BY FEEDERS. COORDINATE UNDERFLOOR ROUTING WITH ALL OTHER DISCIPLINES.

3.
NEW FEEDERS ROUTED THROUGH CRAWLSPACE. REFER TO ES-101 FOR ADDITIONAL DETAILS. (2) 4" COMMUNICATION CONDUITS STUBBED TO INTERIOR SIDE OF FOUNDATION WALL.

4.
CEILING MOUNTED JUNCTION BOX, PROVIDE POWER AND FIRE ALARM RELEASE FOR RATED SMOKE CURTAIN FROM LIFE SAFETY CIRCUIT SHOWN. COORDINATE INSTALLATION WITH ARCHITECT TO ENSURE CEILING ACCESSIBILITY TO REQUIRED COMPONENTS WITH SOFFIT. REFER TO FA-102 FOR ADDITIONAL DETAILS.

5.
CONDUIT ROUTING UNDER SLAB FOR (1) FEEDER SERVING '2PNL1' LOCATED IN ELEVATOR MACHINE ROOM. REFER TO 7C/EP-401 FOR ADDITIONAL DETAILS. COORDINATE UNDERFLOOR ROUTING WITH OTHER DISCIPLINES.

NORTH ARROW

CONSTRUCTION DOCUMENTS - FINAL BID DOCUMENTS

Revisions: | Date

CONSULTANTS:

Landmark Engineering Group, Inc.
Civil Engineer
2834 104th Street
Urbandale, IA 50322
515.221.1322

Gateway Geotechnical, LLC
Geotechnical Engineer
17736 Edison Avenue
Chesterfield, MO 63005
636.532.7747

SWT Design
Landscape Architect
7722 Big Bend Boulevard
St. Louis, MO 63119
314.644.5700

Hinman Consulting Engineers, Inc
Physical Security
One Bush Street, Suite 510
San Francisco, CA 94104
415.621.4423

The Schachinger Group
Elevator
4255 Stoney Creek Drive
Fort Collins, CO 80525
703.608.2283

SidePlate
Steel Frame
25909 Pala, Ste 200, 92691
Mission Viejo, CA
949.305.7889

ARCHITECT/ENGINEERS:

CANNONDESIGN

© CannonDesign 2014
All rights reserved. No part of this document may be reproduced or utilized in any form, without prior written authorization by The Cannon Corporation.

Drawing Title: **GROUND LEVEL POWER PLAN**

Approved: Project Director

Project Title: **John J. Pershing VAMC Clinical & Urgent Care Addition**

Location: **Poplar Bluff, Missouri**

Date: **DEC 14, 2015** | Checked: **TZ** | Drawn: **AW/CK**

Project Number: **657-351**
CANNON DESIGN PROJECT NO. 03850.05

Building Number

Drawing Number: **EP-102**
Dwg. of

Office of Construction and Facilities Management

Department of Veterans Affairs

VA FORM 08-6231

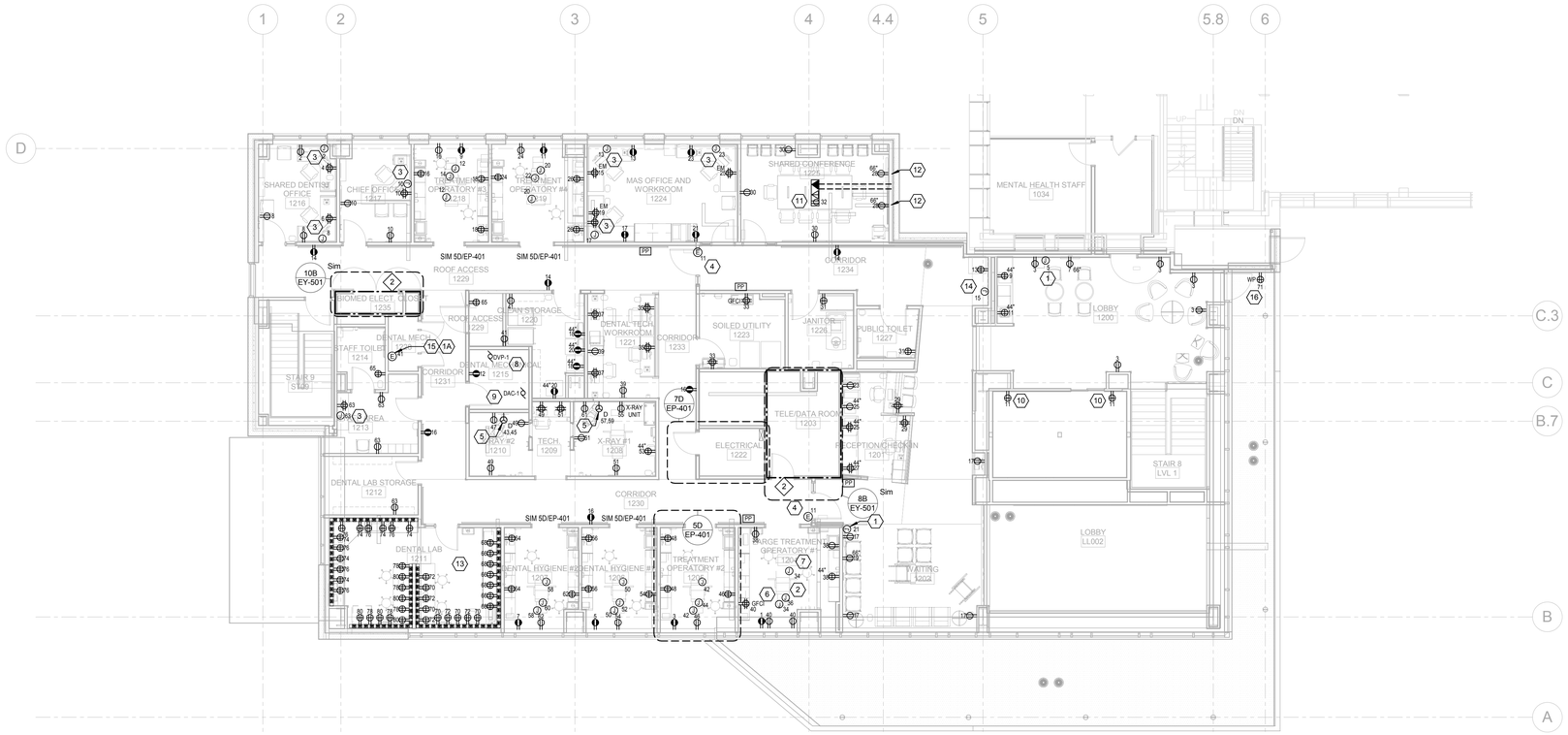

2F LEVEL 01 POWER PLAN
1/8" = 1'-0"

BRANCH CIRCUIT NOTES ◇ :

1. EXTEND BRANCH CIRCUITS IN THIS AREA TO THE FOLLOWING BRANCH PANELBOARDS, UNLESS OTHERWISE NOTED:

   120 / 208V PANELBOARDS
   2LNL1 - NORMAL POWER
   1LSL1 - LIFE SAFETY POWER (NEC 517)
   2LCL1 - CRITICAL POWER (NEC 517)

2. EXTEND BRANCH CIRCUITS IN THIS AREA TO THE FOLLOWING BRANCH PANELBOARDS, UNLESS OTHERWISE NOTED:

   120 / 208V PANELBOARDS
   2LCL2 - CRITICAL POWER (NEC 517)

GENERAL NOTES :

A.
ALL FINAL ELECTRICAL DEVICE LOCATIONS SHALL BE COORDINATED WITH ARCHITECTURAL ELEVATIONS.

KEYED NOTES ⬡ :

1.
CONNECTION FOR A CHARGING KIOSK, COORDINATE LOCATION WITH FURNITURE LAYOUT.

2
PROVIDE FLOOR MOUNTED JUNCTION BOX WITH QUADRAPLEX RECEPTACLE FOR DENTAL CHAIR. COORDINATE EXACT REQUIREMENTS AND LOCATION WITH DENTAL EQUIPMENT PROVIDER. ASSEMBLY SHALL MAINTAIN 2-HOUR FIRE RATING OF FLOOR SYSTEM. TYPICAL.

3.
CONNECTION FOR TASK LIGHT. COORDINATE EXACT LOCATION WITH FURNITURE LAYOUT.

4.
PROVIDE LIFE SAFETY CONNECTION FOR MOTOR TO AUTOMATIC POWER DOORS TO CIRCUIT SHOWN.

5.
PROVIDE 208V SINGLE PHASE CONNECTION FOR PANORAMIC X-RAY UNIT FROM 2LNL1. WIRE SIZE SHALL BE (2)#10 WITH #10G IN 3/4"C FED FROM 30A/2P CIRCUIT BREAKER. COORDINATE EXACT CONNECTION REQUIREMENTS LOCATIONS FOR UNIT AND ALL AUXILLIARY CONNECTIONS FOR A COMPLETE AND FUNCTIONAL INSTALLATION EQUIPMENT VENDOR.

6.
PROVIDE CEILING MOUNTED POWER CONNECTION FOR BARIATRIC LIFT COORDINATE EXACT LOCATION WITH FURNITURE LAYOUT IN ROOM.

7.
CEILING MOUNTED JUNCTION BOX PROVIDE FOR CEILING MOUNTED MICROSCOPE.

8.
PROVIDE DISCONNECT SWITCH FOR DENTAL VACUUM PUMP, DVP-1.

9.
PROVIDE DISCONNECT SWITCH FOR DENTAL AIR COMPRESSOR, DAC-1.

10.
PROVIDE GFI RECEPTACLE ACCESSIBLE AT ELEVATOR DOORWAY. COORDINATE EXACT LOCATION WITH ELEVATOR VENDOR.

11.
CONTRACTOR SHALL INSTALL A THREE GANG 2-HOUR FIRE RATED FLOOR BOX IN THE CENTER OF THE ROOM WITH ELECTRICAL, DATA/VOICE AND AV CONNECTIONS. THE FOLLOWING CONDUITS SHALL BE ROUTED TO NEAREST WALL AND STUBBED ABOVE CEILING, (1) 3/4" CONDUIT FOR ELECTRICAL TO INDICATED CIRCUIT, AS WELL AS (1) 1 1/4" CONDUIT AND (1) 1" CONDUIT FOR VOICE/DATA/AV. (1) 1 1/4" CONDUIT SHALL BE ROUTED THROUGH FLOOR FROM FLOOR BOX TO WALL BOXES AS INDICATED FOR EACH SMARTBOARD (TWO TOTAL).

12.
PROVIDE TWO GANG DIVIDED MULTI-SERVICE WALL BOX MOUNTED 66" AFF FOR SMARTBOARD. COORDINATE EXACT LOCATIONS WITH ARCHITECTURAL DRAWINGS.

13.
WIREMOLD MOUNTING HEIGHT IN THIS SPACE SHALL BE COORDINATED WITH ARCHITECTURAL MOUNTING HEIGHTS. WIREMOLD SHALL HAVE RECEPTACLES SPACED 24" O.C CIRCUITED AS SHOWN.

14.
PROVIDE GFI CONNECTION FOR ELECTRIC WATER COOLER. COORDINATE EXACT REQUIREMENTS WITH MANUFACTURER. PROVIDE LOCAL TOGGLE-STYLE DISCONNECT SWITCH FOR HARDWIRED CONNECTION.

15.
PROVIDE CONNECTION FROM PANEL '1LSL1' FOR MED GAS PANEL. COORDINATE WITH EQUIPMENT VENDOR.

16.
PROVIDE RECEPTACLE AS SHOWN IN EXTERIOR WALL OF ROOF OVERHANG.

ALTERNATE KEYED NOTES ⬡ :

1A.
DO NOT INSTALL MED GAS PANEL CONNECTION IF BID ALTERNATE 8 IS ACCEPTED. COORDINATE WITH PLUMBING DRAWINGS.

NORTH ARROW

CONSTRUCTION DOCUMENTS - FINAL BID DOCUMENTS

Revisions:	Date

CONSULTANTS:

Landmark Engineering Group, Inc.
Civil Engineer
2834 104th Street
Urbandale, IA 50322
515.221.1322

Gateway Geotechnical, LLC
Geotechnical Engineer
17736 Edison Avenue
Chesterfield, MO 63005
636.532.7747

SWT Design
Landscape Architect
7722 Big Bend Boulevard
St. Louis, MO 63119
314.644.5700

Hinman Consulting Engineers, Inc
Physical Security
One Bush Street, Suite 510
San Francisco, CA 94104
415.621.4423

The Schachinger Group
Elevator
4255 Stoney Creek Drive
Fort Collins, CO 80525
703.608.2263

SidePlate
Steel Frame
25909 Pala, Ste 200, 92691
Mission Viejo, CA
949.305.7889

ARCHITECT/ENGINEERS:

CANNONDESIGN

© CannonDesign 2014
All rights reserved. No part of this document may be reproduced or utilized in any form, without prior written authorization by The Cannon Corporation.

Drawing Title: **LEVEL 01 POWER PLAN**

Approved: Project Director

Project Title: **John J. Pershing VAMC Clinical & Urgent Care Addition**

Project Number: **657-351**
CANNON DESIGN PROJECT NO. 03850.05

Building Number

Location: **Poplar Bluff, Missouri**

Date: **DEC 14, 2015** | Checked: **TZ** | Drawn: **AW/CK**

Drawing Number: **EP-103**
Dwg. of

Office of Construction and Facilities Management

Department of Veterans Affairs

VA FORM 08-6231

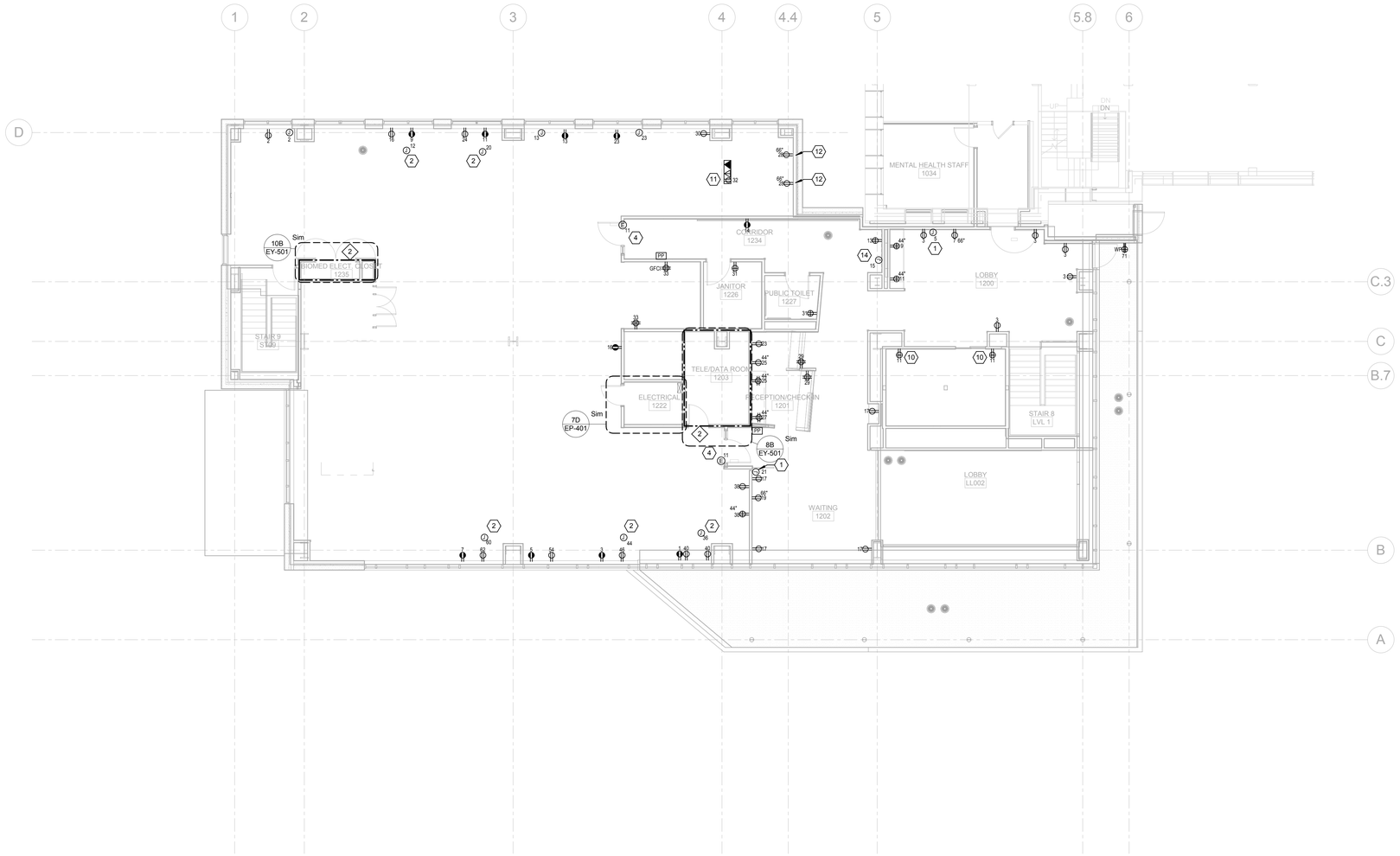

4F LEVEL01 POWER PLAN
1/8" = 1'-0"

BRANCH CIRCUIT NOTES ◇ :

1. EXTEND BRANCH CIRCUITS IN THIS AREA TO THE FOLLOWING BRANCH PANELBOARDS, UNLESS OTHERWISE NOTED:

   120 / 208V PANELBOARDS
   2LNL1 - NORMAL POWER
   1LSL1 - LIFE SAFETY POWER (NEC 517)
   2LCL1 - CRITICAL POWER (NEC 517)

2. EXTEND BRANCH CIRCUITS IN THIS AREA TO THE FOLLOWING BRANCH PANELBOARDS, UNLESS OTHERWISE NOTED:

   120 / 208V PANELBOARDS
   2LCL2 - CRITICAL POWER (NEC 517)

GENERAL NOTES :

A.
ALL FINAL ELECTRICAL DEVICE LOCATIONS SHALL BE COORDINATED WITH ARCHITECTURAL ELEVATIONS.

KEYED NOTES ⬡ :

1.
CONNECTION FOR A CHARGING KIOSK, COORDINATE LOCATION WITH FURNITURE LAYOUT.

2
CONTRACTOR SHALL TERMINATE SERVICES FOR DENTAL CHAIR IN FLOORBOX. COORDINATE PLACEMENT AND REQUIREMENTS OF FLOORBOX WITH DENTAL EQUIPMENT PROVIDER. ASSEMBLY SHALL MAINTAIN 2-HOUR FIRE RATING OF FLOOR SYSTEM. TYPICAL.

3.
NOT USED UNDER #1 ALTERNATE SCOPE.

4.
PROVIDE LIFE SAFETY CONNECTION FOR MOTOR TO AUTOMATIC POWER DOORS TO CIRCUIT SHOWN.

5.
NOT USED UNDER #1 ALTERNATE SCOPE.

6.
NOT USED UNDER #1 ALTERNATE SCOPE.

7.
NOT USED UNDER #1 ALTERNATE SCOPE..

8.
NOT USED UNDER #1 ALTERNATE SCOPE.

9.
NOT USED UNDER #1 ALTERNATE SCOPE.

10.
PROVIDE GFI RECEPTACLE ACCESSIBLE AT ELEVATOR DOORWAY. COORDINATE EXACT LOCATION WITH ELEVATOR VENDOR.

11.
CONTRACTOR SHALL INSTALL A THREE GANG 2-HOUR FIRE RATED FLOOR BOX IN THE CENTER OF THE ROOM WITH ELECTRICAL, DATA/VOICE AND AV CONNECTIONS. THE FOLLOWING CONDUITS SHALL BE ROUTED TO NEAREST WALL AND STUBBED ABOVE CEILING, (1) 3/4" CONDUIT FOR ELECTRICAL TO INDICATED CIRCUIT, AS WELL AS (1) 1 1/4" CONDUIT AND (1) 1" CONDUIT FOR VOICE/DATA/AV. (1) 1 1/4" CONDUIT SHALL BE ROUTED THROUGH FLOOR FROM FLOOR BOX TO WALL BOXES AS INDICATED FOR EACH SMARTBOARD (TWO TOTAL.

12.
PROVIDE TWO GANG DIVIDED MULTI-SERVICE WALL BOX MOUNTED 66" AFF FOR SMARTBOARD. COORDINATE EXACT LOCATIONS WITH ARCHITECTURAL DRAWINGS.

13.
NOT USED UNDER ALTERNATE #1 SCOPE.

14.
PROVIDE GFI CONNECTION FOR ELECTRIC WATER COOLER. COORDINATE EXACT REQUIREMENTS WITH MANUFACTURER. PROVIDE LOCAL TOGGLE-STYLE DISCONNECT SWITCH FOR HARDWIRED CONNECTION.

CONSTRUCTION DOCUMENTS - FINAL BID DOCUMENTS

Revisions: | Date

CONSULTANTS:

Landmark Engineering Group, Inc.
Civil Engineer
2834 104th Street
Urbandale, IA 50322
515.221.1322

Gateway Geotechnical, LLC
Geotechnical Engineer
17736 Edison Avenue
Chesterfield, MO 63005
636.532.7747

SWT Design
Landscape Architect
7722 Big Bend Boulevard
St. Louis, MO 63119
314.644.5700

Hinman Consulting Engineers, Inc
Physical Security
One Bush Street, Suite 510
San Francisco, CA 94104
415.621.4423

The Schachinger Group
Elevator
4255 Stoney Creek Drive
Fort Collins, CO 80525
703.608.2263

SidePlate
Steel Frame
25909 Pala, Ste 200, 92691
Mission Viejo, CA
949.305.7889

ARCHITECT/ENGINEERS:

CANNONDESIGN

© CannonDesign 2014
All rights reserved. No part of this document may be reproduced or utilized in any form, without prior written authorization by The Cannon Corporation.

Drawing Title
LEVEL 01 POWER PLAN - BID ALTERNATE 1

Approved: Project Director

Project Title
John J. Pershing VAMC Clinical & Urgent Care Addition

Location
Poplar Bluff, Missouri

Date **DEC 14, 2015** | Checked **TZ** | Drawn **AW**

Project Number
657-351
CANNON DESIGN PROJECT NO. 03850.05

Building Number

Drawing Number
EP-103A
Dwg. of

Office of Construction and Facilities Management

Department of Veterans Affairs

VA FORM 08-6231

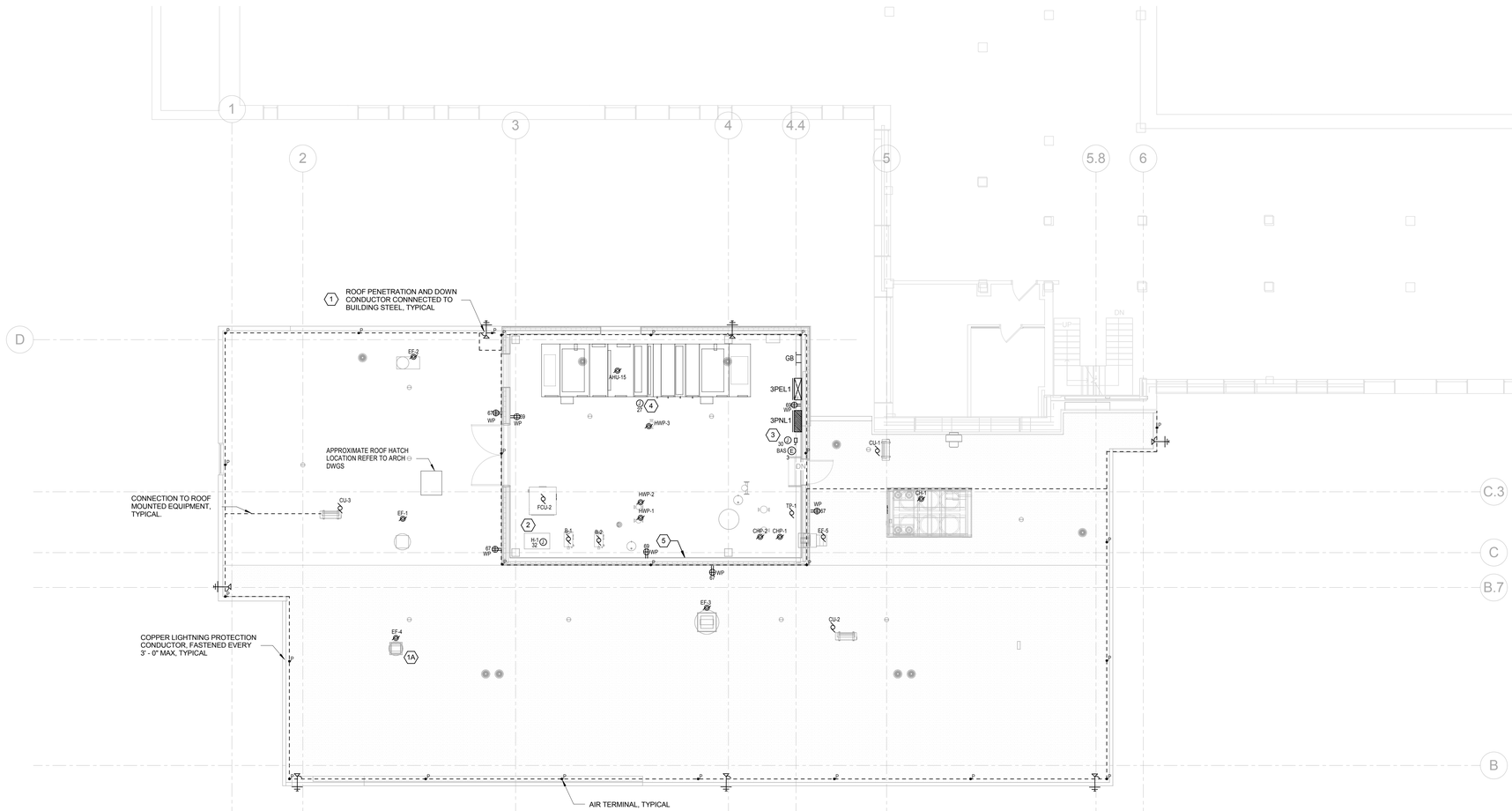

BRANCH CIRCUIT NOTES ◇ :

1. EXTEND BRANCH CIRCUITS IN THIS AREA TO THE FOLLOWING BRANCH PANELBOARDS, UNLESS OTHERWISE NOTED:

   120 / 208V PANELBOARDS
   2LNL1 - NORMAL POWER
   1LSL1 - LIFE SAFETY POWER (NEC 517)
   2LCL1 - CRITICAL POWER (NEC 517)

KEYED NOTES ⬡ :

1.
PROVIDE UL LISTED MASTER LABEL CERTIFIED LIGHTNING PROTECTION SYSTEM WITH ALL REQUIRED COMPONENTS AND CONDUCTORS. COORDINATE FINAL DOWN CONDUCTOR LOCATIONS WITH ARCHITECT BONDED TO BUILDING STEEL. CONTRACTOR SHALL BE RESPONSIBLE TO COORDINATE WITH ARCHITECTURAL DESIGN TO PROVIDE APPROPRIATE DI-ELECTRIC CONNECTORS/FASTENING MEANS FOR LIGHTNING PROTECTION SYSTEM AS REQUIRED.

2.
PROVIDE CONNECTION FOR GAS HEATED STEAM GENERATOR, H-1.

3.
PROVIDE 30A DISCONNECT SWITCH FED FROM 3PEL1 VIA 30mA EPD CIRCUIT BREAKER, FOR CHILLER SUPPLY AND RETURN HEAT TRACE. COORDINATE EXACT REQUIREMENTS WITH MECHANICAL DRAWINGS.

4.
PROVIDE CONNECTION FROM 2LCL1 FOR AHU LIGHTS AND CONVIENENCE RECEPTACLE. COORDINATE EXACT CONNECTION LOCATION WITH EQUIPMENT VENDOR.

5.
PROPOSED LOCATION FOR VARIABLE SPEED DRIVES NOT MOUNTED TO EQUIPMENT.

ALTERNATE KEYED NOTES ⬡ :

1A.
EF-4 AND ASSOCIATED WIRING AND DISCONNECT SHALL NOT BE INSTALLED IF ALTERNATE #1 IS ACCEPTED. REFER TO MECHANICAL PLANS.

1 ROOF LEVEL POWER PLAN
1/8" = 1'-0"

NORTH ARROW

CONSTRUCTION DOCUMENTS - FINAL BID DOCUMENTS

Revisions:	Date

CONSULTANTS:

Landmark Engineering Group, Inc.
Civil Engineer
2834 104th Street
Urbandale, IA 50322
515.221.1322

Gateway Geotechnical, LLC
Geotechnical Engineer
17736 Edison Avenue
Chesterfield, MO 63005
636.532.7747

SWT Design
Landscape Architect
7722 Big Bend Boulevard
St. Louis, MO 63119
314.644.5700

Hinman Consulting Engineers, Inc
Physical Security
One Bush Street, Suite 510
San Francisco, CA 94104
415.621.4423

The Schachinger Group
Elevator
4255 Stoney Creek Drive
Fort Collins, CO 80525
703.608.2263

SidePlate
Steel Frame
25909 Pala, Ste 200, 92691
Mission Viejo, CA
949.305.7889

ARCHITECT/ENGINEERS:

CANNONDESIGN

© CannonDesign 2014
All rights reserved. No part of this document may be reproduced or utilized in any form, without prior written authorization by The Cannon Corporation.

Drawing Title: **ROOF LEVEL POWER PLAN**

Approved: Project Director

Project Title: **John J. Pershing VAMC Clinical & Urgent Care Addition**

Location: **Poplar Bluff, Missouri**

Date: **DEC 14, 2015** | Checked: **TZ** | Drawn: **AW/CK**

Project Number: **657-351**
CANNON DESIGN PROJECT NO. 03850.05

Building Number

Drawing Number: **EP-104**
Dwg. of

Office of Construction and Facilities Management

Department of Veterans Affairs

VA FORM 08-6231

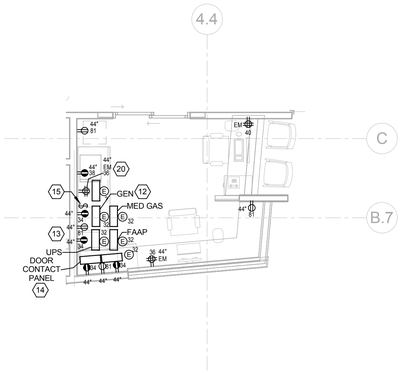

5C ENLARGED PLAN - MAA
1/4" = 1'-0"

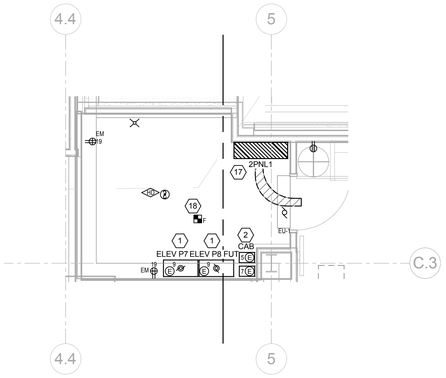

7C ENLARGED PLAN - ELEV MACHINE ROOM G-091
1/4" = 1'-0"

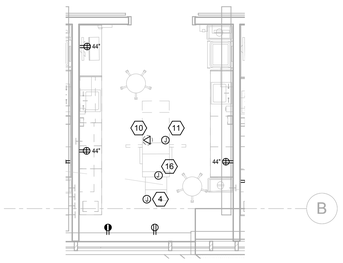

5D ENLARGED TYPICAL - TREATMENT OPERATORY
1/4" = 1'-0"

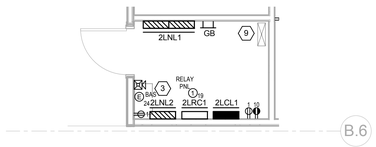

7D ENLARGED PLAN - ELECTRICAL ROOM 1222
1/4" = 1'-0"

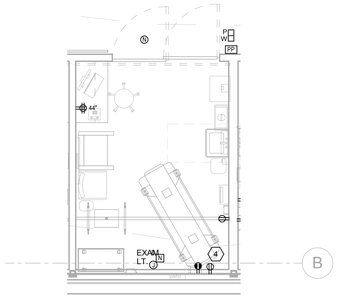

5F ENLARGED TYPICAL - EXAM ROOM
1/4" = 1'-0"

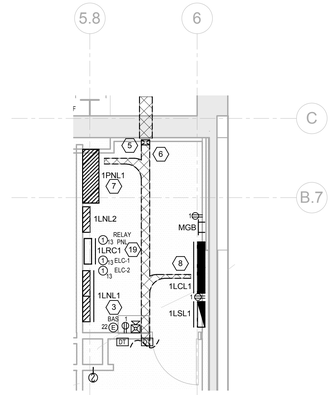

7F ENLARGED PLAN - ELECTRICAL ROOM LL-006
1/4" = 1'-0"

GENERAL NOTES :

1. REFER TO FLOOR PLAN SHEETS FOR CIRCUITING BOUNDARIES

KEYED NOTES :

1.
PROVIDE 400A BUSSMANN POWER MODULE AND CONNECTION TO LIFE SAFETY PANEL "1LSL1" FOR SHUNT TRIP CIRCUIT, COORDINATE EXACT SIZE REQUIREMENTS WITH ELEVATOR VENDOR. PROVIDE 120V CONNECTION FOR SHUNT TRIP WETTING CIRCUIT.

2.
PROVIDE TWO (INSTALLED AND FUTURE ELEVATOR) 30A FUSED DISCONNECTS STACKED VERTICALLY, FOR ELEVATOR CAB LIGHTING. WIRE TO LIFE SAFETY PANEL 1LSL1. POSITION DISCONNECT FOR FUTURE ELEVATOR IN UPPER POSITION. COORDINATE WITH ARCHITECTURAL DRAWINGS AND EQUIPMENT VENDOR WHICH ELEVATOR TO BE INSTALLED.

3.
BAS PANEL POWER CONNECTION, WIRE TO LIFE SAFETY PANEL 1LSL1.

4.
PROVIDE CEILING MOUNTED POWER CONNECTION FOR BARIATRIC LIFT COORDINATE EXACT LOCATION WITH FURNITURE LAYOUT IN ROOM.

5.
(5) NEW FEEDERS AND (2) 4" COMMUNICATION CONDUITS THROUGH WALL PENETRATION, (3) FEED PANELS IN THIS ROOM. REFER TO EP-101 FOR ENTRANCE DETAILS.

6.
(2) REMAINING FEEDERS IN CONDUIT, AND (2) 4" COMMUNICATION CONDUITS PENETRATE SLAB ROUTED BELOW TO PLUMBING CHASE. PROVIDE PULL BOXES FOR EACH FEEDER PRIOR TO PENETRATING SLAB. REFER TO EP-101 FOR ADDITIONAL DETAILS.

7.
(2) FEEDERS SUB-FED FROM 1PNL1 PENETRATE SLAB ROUTED BELOW TO PLUMBING CHASE, REFER TO EP-101 FOR DETAILS.

8.
(2) FEEDERS SUB-FED FROM 1LCL1 PENETRATE SLAB ROUTED BELOW TO PLUMBING CHASE, REFER TO EP-101 FOR DETAILS.

9.
(4) FEEDERS TURNED OUT OF PLUMBING CHASE TO FEED PANELS IN THIS ROOM AND ADJACENT IT ROOM. (2) 4" COMMUNICATION CONDUITS SHALL PENETRATE WALL AND BE STUBBED TO ADJACENT IT ROOM. REMAINING (2) FEEDERS CONTINUE THROUGH LEVEL ONE PLENUM TO PENTHOUSE PANELS. FIELD COORDINATE PLENUM ROUTING.

10.
IN CEILING DATA CONNECTION FOR CEILING MOUNTED MICROSCOPE.

11.
CEILING MOUNTED JUNCTION BOX PROVIDE FOR CEILING MOUNTED MICROSCOPE.

12.
TWO NEW GENERATOR ANNUCIATOR PANELS FOR EXISTING GENERATORS AT BUILDINGS 7 AND 16. REFER TO ES-101 FOR LOCATIONS.

13.
RELOCATED UPS ALARM PANEL

14.
NEW DOOR CONTACT ALARM PANELS.

15.
SINGLE POLE TOGGLE SWITCH WITH RED ILLUMINATED 'ON' INDICATION FOR HELIPAD LANDING LIGHTS. PROVIDE ENGRAVED LABEL 'Helipad Lights'. REFER TO ES-401.

16.
PROVIDE FLOOR MOUNTED JUNCTION BOX WITH QUADRAPLEX RECEPTACLE FOR DENTAL CHAIR. COORDINATE EXACT REQUIREMENTS AND LOCATION WITH DENTAL EQUIPMENT PROVIDER.

17.
PROPOSED ROUTING OF FEEDER FEEDING PANEL 2PNL1 BELOW FLOOR SLAB FROM CRAWL SPACE. TURN UP THROUGH SLAB TO SERVE PANEL. COORDINATE UNDERFLOOR ROUTING WITH OTHER DISCIPLINES. REFER TO EP-102 FOR ADDITIONAL DETAILS.

18.
FIRE ALARM RELAYS (TYP) FOR ELEVATOR CONTACTOR AND CONTROLLER.

19.
EMERGENCY LIGHTING CONTACTORS, ELC-1 AND ELC-2, SHALL BE ACCESSIBLY WALL MOUNTED NEAR 1LNL2. REFER TO 6F/EL-501.

20.
PROVIDE THIRD GENERATOR ANNUCIATOR PANEL FOR CONNECTION BY OWNER TO FUTURE GENERATOR. LABEL AS 'FUTURE'. STUB CONDUITS ABOVE CEILING. REFER TO ARCHITECTURAL DRAWINGS FOR MOUNTING LOCATION.

CONSTRUCTION DOCUMENTS - FINAL BID DOCUMENTS

Revisions:	Date

CONSULTANTS:

Landmark Engineering Group, Inc.
Civil Engineer
2834 104th Street
Urbandale, IA 50322
515.221.1322

Gateway Geotechnical, LLC
Geotechnical Engineer
17736 Edison Avenue
Chesterfield, MO 63005
636.532.7747

SWT Design
Landscape Architect
7722 Big Bend Boulevard
St. Louis, MO 63119
314.644.5700

Hinman Consulting Engineers, Inc
Physical Security
One Bush Street, Suite 510
San Francisco, CA 94104
415.621.4423

The Schachinger Group
Elevator
4255 Stoney Creek Drive
Fort Collins, CO 80525
703.608.2263

SidePlate
Steel Frame
25909 Pala, Ste 200, 92691
Mission Viejo, CA
949.305.7889

ARCHITECT/ENGINEERS:

CANNONDESIGN

© CannonDesign 2014
All rights reserved. No part of this document may be reproduced or utilized in any form, without prior written authorization by The Cannon Corporation.

Drawing Title: **ENLARGED PLANS**

Approved: Project Director

Project Title: **John J. Pershing VAMC Clinical & Urgent Care Addition**

Location: **Poplar Bluff, Missouri**

Date: **DEC 14, 2015** | Checked: **TZ** | Drawn: **AW/CK**

Project Number: **657-351**
CANNON DESIGN PROJECT NO. 03850.05

Building Number

Drawing Number: **EP-401**
Dwg. of

Office of Construction and Facilities Management

Department of Veterans Affairs

VA FORM 08-6231

EQUIPMENT CONNECTION / MOTOR CONTROLLER SCHEDULE

EQUIPMENT DESIGNATION	EQUIPMENT / MOTOR DATA						CONTROLLER DATA												LOCAL DISCONNECT SWITCH						SOURCE PROTECTIVE DEVICE					WIRING									REMARKS
							MOUNTING					OVERCURRENT PROTECTIVE DEVICE							OVERCURRENT PROTECTIVE DEVICE						TYPE					PHASE		NEUTRAL		GROUND		CONDUIT			
	DESCRIPTION	HP	KW	FLA	VOLTAGE	PHASE	PACKAGED	SEPARATE	MCC	TYPE	NEMA SIZE	MCP	FUSE	RATING	SINGLE PHASE PROTECTION	NEMA ENCLOSURE	WEIGHT(LBS)	LOCATION	MCP	FUSE	RATING	NEMA ENCLOSURE	WEIGHT(LBS)	LOCATION	MCP*	FUSE	BREAKER	POLE AMPS	PANELBOARD OR MCC	QUANTITY	SIZE	QUANTITY	SIZE	QUANTITY	SIZE	QUANTITY	SIZE	CONNECTION TYPE	
AHU-1	SUPPLY FAN	(2)15			208	3		X		VSD					X	1		AT UNIT	SEE CONTROLLER								X	250	3PEL1 -	SEE ONE-LINE DIAGRAM									1,2,3
	RETURN FAN	(2)7.5			208	3		X		VSD					X	1		AT UNIT																					
B-1	BOILER	0.43			120	1		X		TS						1		AT UNIT	SEE CONTROLLER								X	15	3PEL1 -	1	#12	1	#12	1	#12	1	3/4"	DC	
B-2	BOILER	0.43			120	1		X		TS						1		AT UNIT	SEE CONTROLLER								X	15	3PEL1 -	1	#12	1	#12	1	#12	1	3/4"	DC	
CH-1	CHILLER CONDENSER			255	208	3	X														400A	3R		AT UNIT			X	300	3PNL1 -	SEE ONE-LINE DIAGRAM									1
	CHILLER COMPRESSOR		58.9		208	3	X																																
CHWP-1	CHILLED WATER PUMP	5			208	3		X		VSD					X	1		AT UNIT	SEE CONTROLLER								X	35	3PNL1 -	SEE ONE-LINE DIAGRAM									3
CHWP-2	CHILLED WATER PUMP	5			208	3		X		VSD					X	1		AT UNIT	SEE CONTROLLER								X	35	3PNL1 -	SEE ONE-LINE DIAGRAM									3
CU-1	CONDENSER UNIT			19 MCA	208	1	X														30A	3R		AT UNIT			X	25	3PEL1 -	2	#10	-	-	1	#10	1	3/4"	DC	
CU-2	CONDENSER UNIT			19 MCA	208	1	X														30A	3R		AT UNIT			X	25	3PEL1 -	2	#10	-	-	1	#10	1	3/4"	DC	
CU-3	CONDENSER UNIT			19 MCA	208	1	X														30A	3R		AT UNIT			X	25	3PEL1 -	2	#10	-	-	1	#10	1	3/4"	DC	
EU-1	EVAPORATING UNIT					1	X			TS														AT UNIT					CU-1	1	#12	1	#12	1	#12	1	3/4"	DC	5
EU-2	EVAPORATING UNIT					1	X			TS														AT UNIT					CU-2	1	#12	1	#12	1	#12	1	3/4"	DC	5
EU-3	EVAPORATING UNIT					1	X			TS														AT UNIT					CU-3	1	#12	1	#12	1	#12	1	3/4"	DC	5
CP-1	CIRCULATION PUMP	2/5			120	1		X		TS						1		AT UNIT	SEE CONTROLLER								X	20	1LCL1 -	1	#12	1	#12	1	#12	1	3/4"	DC	
DAC-1	DENTAL AIR COMPRESSOR	(3)2		32	208	1	X														60A	1		AT UNIT			X	40	3PEL1 -	2	#8	-	-	1	#8	1	3/4"	DC	
DVP-1	DENTAL VACUUM PUMP	3		8	208	1	X														30A	1		AT UNIT			X	25	3PEL1 -	2	#10	-	-	1	#10	1	3/4"	DC	
EF-1	EXHAUST FAN	1			208	3		X		VSD					X	1		PENTHOUSE			30A	3R		AT UNIT			X	15	3PNL1 -	3	#12	-	-	1	#12	1	3/4"	DC	3
EF-2	EXHAUST FAN	1			208	3		X		VSD					X	1		PENTHOUSE			30A	3R		AT UNIT			X	15	3PEL1 -	3	#12	-	-	1	#12	1	3/4"	DC	3
EF-3	EXHAUST FAN	2			208	3		X		VSD					X	1		PENTHOUSE			30A	3R		AT UNIT			X	15	3PNL1 -	3	#12	-	-	1	#12	1	3/4"	DC	3
EF-4	EXHAUST FAN	3/4			208	3		X		VSD					X	1		PENTHOUSE			30A	3R		AT UNIT			X	15	3PNL1 -	3	#12	-	-	1	#12	1	3/4"	DC	3
EF-5	EXHAUST FAN	1/10			120	1		X		ALC						1		PENTHOUSE			30A	1		AT UNIT			X	15	3PNL1 -	1	#12	1	#12	1	#12	1	3/4"	DC	
ELEV-P7	HYDRAULIC ELEVATOR	60			208	3	X											AT UNIT			400A	1		AT UNIT			X	250	2PNL1 -	SEE ONE-LINE DIAGRAM									4
ELEV-P8	HYDRAULIC ELEVATOR - FUTURE	60			208	3	X											AT UNIT			400A	1		AT UNIT			X	250	2PNL1 -	SEE ONE-LINE DIAGRAM									4
FCU-2	FAN COIL UNIT	1			208	1		X		TS									SEE CONTROLLER								X	15	3PNL1 -	2	#12	-	-	1	#12	1	3/4"	DC	
H-1	STEAM HUMIDIFIER - GAS			4	120	1	X														30A	1		AT UNIT			X	15	3PEL1 -	1	#12	1	#12	1	#12	1	3/4"	DC	
HWP-1	HOT WATER PUMP	1 1/2			208	3		X		VSD					X	1		AT UNIT	SEE CONTROLLER								X	15	3PEL1 -	3	#12	-	-	1	#12	1	3/4"	DC	3
HWP-2	HOT WATER PUMP	1 1/2			208	3		X		VSD					X	1		AT UNIT	SEE CONTROLLER								X	15	3PEL1 -	3	#12	-	-	1	#12	1	3/4"	DC	3
HWP-3	HOT WATER PUMP	1 1/2			208	3		X		VSD					X	1		AT UNIT	SEE CONTROLLER								X	15	3PEL1 -	3	#12	-	-	1	#12	1	3/4"	DC	3
TP-1	TRAP PRIMER PUMP			0.3	120	1	X											AT UNIT			15A	1		AT UNIT			X	20	1LNL1 -	1	#12	1	#12	1	#12	1	3/4"	DC	
UH-1	HOT WATER UNIT HEATER			1	120	1	X											AT UNIT			20A	1		AT UNIT			X	20	1LNL1 -	1	#12	1	#12	1	#12	1	3/4"	DC	
UH-2	HOT WATER UNIT HEATER			1	120	1	X											AT UNIT			20A	1		AT UNIT			X	20	1LNL1 -	1	#12	1	#12	1	#12	1	3/4"	DC	
UH-3	ELECTRIC BASEBOARD HEATER		0.75		120	1	X											AT UNIT			20A	1		AT UNIT			X	20	1LNL1 -	1	#12	1	#12	1	#12	1	3/4"	DC	

CONTROLLER TYPE:
- AL ACROSS THE LINE H-O-A
- ALC ACROSS THE LINE COMBINATION DISCONNECT H-O-A
- ALO ACROSS THE LINE COMBINATION DISCONNECT O-A
- RV REDUCED VOLTAGE
- RVC REDUCED VOLTAGE COMBINATION DISCONNECT
- 2S TWO SPEED
- VSD VARIABLE SPEED DRIVE
- TS FRACTIONAL HP MANUAL STARTER

*MINIMUM MOTOR CIRCUIT PROTECTOR (MCP) FRAME SIZE SHALL BE BASED ON LISTED POLE AMPS

GENERAL NOTES:

A. FINAL CONNECTIONS TO ALL EQUIPMENT SHALL BE MADE BY DIVISION 26. INTERCONNECT ALL ASSOCIATED EQUIPMENT ELECTRICAL DEVICES.

B. VERIFY ALL RECEPTACLE TYPES AND BRANCH WIRING WITH EQUIPMENT SUPPLIER FOR COORDINATION OF EQUIPMENT PLUGS AND WIRING PRIOR TO INSTALLATION.

REMARKS:
1. SINGLE POINT CONNECTION TO UNIT.
2. VFD PROVIDED FOR EACH FAN.
3. PROVIDE BREAK BEFORE MAKE CONTACTS. WIRE BETWEEN LOCAL DISCONNECT AND VFD PRIOR TO OPENING DISCONNECT SWITCH.
4. PROVIDE ELEVATOR DISCONNECT WITH SHUNT TRIP AND INTERFACE (BUSSMANN POWER MODULE OR APPROVED SIMILAR)
5. POWER SUPPLIED FROM CORRESPONDING CONDENSING UNIT

CONNECTION TYPE:
- CP CONTROL PANEL - MAKE DIRECT CONNECTION
- DR STANDARD NEMA 5-20R DUPLEX RECEPTACLE
- JB JUNCTION BOX
- DC DIRECT CONNECTION TO EQUIPMENT
- RC RECEPTACLE TO MATCH EQUIPMENT PLUG

CONSTRUCTION DOCUMENTS - FINAL BID DOCUMENTS

Revisions: Date

CONSULTANTS:

Landmark Engineering Group, Inc.
Civil Engineer
2834 104th Street
Urbandale, IA 50322
515.221.1322

Gateway Geotechnical, LLC
Geotechnical Engineer
17736 Edison Avenue
Chesterfield, MO 63005
636.532.7747

SWT Design
Landscape Architect
7722 Big Bend Boulevard
St. Louis, MO 63119
314.644.5700

Hinman Consulting Engineers, Inc
Physical Security
One Bush Street, Suite 510
San Francisco, CA 94104
415.621.4423

The Schachinger Group
Elevator
4255 Stoney Creek Drive
Fort Collins, CO 80525
703.608.2263

SidePlate
Steel Frame
25909 Pala, Ste 200, 92691
Mission Viejo, CA
949.305.7889

ARCHITECT/ENGINEERS:

CANNONDESIGN

© CannonDesign 2014
All rights reserved. No part of this document may be reproduced or utilized in any form, without prior written authorization by The Cannon Corporation.

Drawing Title: **EQUIPMENT CONNECTION SCHEDULE**

Approved: Project Director

Project Title: **John J. Pershing VAMC Clinical & Urgent Care Addition**

Location: **Poplar Bluff, Missouri**

Date: **DEC 14, 2015** | Checked: **TZ** | Drawn: **AW/CK**

Project Number: **657-351**
CANNON DESIGN PROJECT NO. 03850.05

Building Number

Drawing Number: **EP-511**
Dwg. of

Office of Construction and Facilities Management

Department of Veterans Affairs

VA FORM 08-6231

FEEDER SCHEDULE - COPPER CONDUCTORS

FEEDER ID	AMPS	PHASE WIRES (AWG)	NEUTRAL WIRES (AWG)	GND (AWG)	MIN. CONDUIT SIZE	REMARKS
30/3	30	(3)#10	--	#10	3/4	
30/4	30	(3)#10	(1)#10	#10	3/4	
30/5	30	(3)#10	(1)#6	#10	3/4	
40/3	40	(3)#8	--	#10	3/4	
40/4	40	(3)#8	(1)#8	#10	3/4	
40/5	40	(3)#8	(1)#2	#10	1	
50/3	50	(3)#6	--	#10	1	
50/4	50	(3)#6	(1)#6	#10	1-1/4	
50/5	50	(3)#6	(1)#2	#10	1-1/4	
60/3	60	(3)#4	--	#10	1-1/4	
60/4	60	(3)#4	(1)#4	#10	1-1/4	
60/5	60	(3)#4	(1)#1/0	#10	1-1/4	
70/3	70	(3)#4	--	#8	1-1/4	
70/4	70	(3)#4	(1)#4	#8	1-1/4	
70/5	70	(3)#4	(1)#1/0	#8	1-1/4	
90/3	90	(3)#2	--	#8	1-1/4	
90/4	90	(3)#2	(1)#2	#8	1-1/4	
90/5	90	(3)#2	(1)#3/0	#8	1-1/2	
100/3	100	(3)#1	--	#8	1-1/4	
100/4	100	(3)#1	(1)#1	#8	1-1/2	
100/5	100	(3)#1	(1)#3/0	#8	2	
125/3	125	(3)#1	--	#6	1-1/2	
125/4	125	(3)#1	(1)#1	#6	1-1/2	
125/5	125	(3)#1	(1)250KCMIL	#6	2	
150/3	150	(3)#1/0	--	#6	1-1/2	
150/4	150	(3)#1/0	(1)#1/0	#6	2	
150/5	150	(3)#1/0	(2)#1/0	#6	2	
175/3	175	(3)#2/0	--	#6	1-1/2	
175/4	175	(3)#2/0	(1)#2/0	#6	2	
175/5	175	(3)#2/0	(2)#2/0	#6	2	
200/3	200	(3)#3/0	--	#6	2	
200/4	200	(3)#3/0	(1)#3/0	#6	2	
200/5	200	(3)#3/0	(2)#3/0	#6	2-1/2	
225/3	225	(3)#4/0	--	#4	2	
225/4	225	(3)#4/0	(1)#4/0	#4	2-1/2	
225/5	225	(3)#4/0	(2)#4/0	#4	2-1/2	
250/3	250	(3)250KCMIL	--	#4	2-1/2	
250/4	250	(3)250KCMIL	(1)250KCMIL	#4	2-1/2	
250/5	250	(3)250KCMIL	(2)250KCMIL	#4	3	
300/3	300	(3)350KCMIL	--	#4	2-1/2	
300/4	300	(3)350KCMIL	(1)350KCMIL	#4	3	
300/5	300	(3)350KCMIL	(2)350KCMIL	#4	3	
350/3	350	(3)500KCMIL	--	#2	3	
350/4	350	(3)500KCMIL	(1)500KCMIL	#2	3-1/2	
350/5	350	(3)500KCMIL	(2)500KCMIL	#2	3-1/2	

FEEDER ID	AMPS	PHASE WIRES (AWG)	NEUTRAL WIRES (AWG)	GND (AWG)	MIN. CONDUIT SIZE	REMARKS
400/3	400	(6)#3/0	--	(2)#2	(2)2	
400/4	400	(6)#3/0	(2)#3/0	(2)#2	(2)2	
400/5	400	(6)#3/0	(4)#3/0	(2)#2	(2)2-1/2	
500/3	500	(6)250KCMIL	--	(2)#2	(2)2-1/2	
500/4	500	(6)250KCMIL	(2)250KCMIL	(2)#2	(2)2-1/2	
500/5	500	(6)250KCMIL	(4)250KCMIL	(2)#2	(2)3	
600/3	600	(6)350KCMIL	--	(2)#1	(2)2-1/2	
600/4	600	(6)350KCMIL	(2)350KCMIL	(2)#1	(2)3	
600/5	600	(6)350KCMIL	(4)350KCMIL	(2)#1	(2)3	
700/3	700	(6)500KCMIL	--	(2)#1/0	(2)3	
700/4	700	(6)500KCMIL	(2)500KCMIL	(2)#1/0	(2)3-1/2	
700/5	700	(6)500KCMIL	(4)500KCMIL	(2)#1/0	(2)3-1/2	
800/3	800	(9)300KCMIL	--	(3)#1/0	(3)2-1/2	
800/4	800	(9)300KCMIL	(3)300KCMIL	(3)#1/0	(3)3	
800/5	800	(9)300KCMIL	(6)300KCMIL	(3)#1/0	(3)3	
1000/3	1000	(9)400KCMIL	--	(3)#2/0	(3)3	
1000/4	1000	(9)400KCMIL	(3)400KCMIL	(3)#2/0	(3)3	
1000/5	1000	(9)400KCMIL	(6)400KCMIL	(3)#2/0	(3)3-1/2	
1200/3	1200	(12)350KCMIL	--	(4)#3/0	(4)2-1/2	
1200/4	1200	(12)350KCMIL	(4)350KCMIL	(4)#3/0	(4)3	
1200/5	1200	(12)350KCMIL	(8)350KCMIL	(4)#3/0	(4)3	
1500/3	1500	(12)500KCMIL	--	(4)#4/0	(4)3	
1500/4	1500	(12)500KCMIL	(4)500KCMIL	(4)#4/0	(4)3-1/2	
1500/5	1500	(12)500KCMIL	(8)500KCMIL	(4)#4/0	(4)3-1/2	
1600/3	1600	(15)400KCMIL	--	(5)#4/0	(5)3	
1600/4	1600	(15)400KCMIL	(5)400KCMIL	(5)#4/0	(5)3	
1600/5	1600	(15)400KCMIL	(10)400KCMIL	(5)#4/0	(5)3-1/2	
2000/3	2000	(18)400KCMIL	--	(6)250KCMIL	(6)3	
2000/4	2000	(18)400KCMIL	(6)400KCMIL	(6)250KCMIL	(6)3	
2000/5	2000	(18)400KCMIL	(12)400KCMIL	(6)250KCMIL	(6)3-1/2	
2500/3	2500	(18)600KCMIL	--	(6)350KCMIL	(6)3-1/2	
2500/4	2500	(18)600KCMIL	(6)600KCMIL	(6)350KCMIL	(6)4	
2500/5	2500	(18)600KCMIL	(12)600KCMIL	(6)350KCMIL	(6)4	
3000/3	3000	(24)400KCMIL	--	(8)400KCMIL	(8)3	
3000/4	3000	(24)400KCMIL	(8)400KCMIL	(8)400KCMIL	(8)3-1/2	
3000/5	3000	(24)400KCMIL	(16)400KCMIL	(8)400KCMIL	(8)3-1/2	
3200/3	3200	(30)500KCMIL	--	(10)500KCMIL	(10)3	
3200/4	3200	(30)500KCMIL	(10)500KCMIL	(10)500KCMIL	(10)3-1/2	
3200/5	3200	(30)500KCMIL	(20)500KCMIL	(10)500KCMIL	(10)4	
4000/3	4000	(33)500KCMIL	--	(11)500KCMIL	(11)3	
4000/4	4000	(33)500KCMIL	(11)500KCMIL	(11)500KCMIL	(11)3-1/2	
4000/5	4000	(33)500KCMIL	(22)500KCMIL	(11)500KCMIL	(11)4	

TRANSFORMER SECONDARY FEEDER SCHEDULE - COPPER CONDUCTORS

FEEDER ID	XFMR SIZE (KVA)	PHASE WIRES (AWG)	NEUTRAL WIRES (AWG)	GND (AWG)	MIN. CONDUIT SIZE	GEC	REMARKS
30/T4	9	(3)#8	(1)#8	#8	1	A	
30/T5	9	(3)#8	(1)#2	#8	1	A	
50/T4	15	(3)#6	(1)#6	#8	1-1/4	A	
50/T5	15	(3)#6	(1)#2	#8	1-1/4	A	
100/T4	30	(3)#1	(1)#1	#6	1-1/2	B	
100/T5	30	(3)#1	(1)#3/0	#6	2	B	
150/T4	45	(3)#1/0	(1)#1/0	#6	2	B	
150/T5	45	(3)#1/0	(2)#1/0	#6	2	B	
250/T4	75	(3)250KCMIL	(1)250KCMIL	#2	2-1/2	C	
250/T5	75	(3)250KCMIL	(2)250KCMIL	#2	3	C	
400/T4	112.5	(6)#3/0	(2)#3/0	(2)#1/0	(2)2	D	
400/T5	112.5	(6)#3/0	(4)#3/0	(2)#1/0	(2)2-1/2	D	

FEEDER ID	XFMR SIZE (KVA)	PHASE WIRES (AWG)	NEUTRAL WIRES (AWG)	GND (AWG)	MIN. CONDUIT SIZE	GEC	REMARKS
600/T4	150	(6)250KCMIL	(2)250KCMIL	(2)#1/0	(2)2-1/2	D	
600/T5	150	(6)250KCMIL	(4)250KCMIL	(2)#1/0	(2)3	D	
800/T4	225	(9)300KCMIL	(3)300KCMIL	(3)#2/0	(3)3	E	
800/T5	225	(9)300KCMIL	(6)300KCMIL	(3)#2/0	(3)3	E	
1000/T4	300	(9)400KCMIL	(3)400KCMIL	(3)#3/0	(3)3	F	
1000/T5	300	(9)400KCMIL	(6)400KCMIL	(3)#3/0	(3)3-1/2	F	
1600/T4	500	(18)400KCMIL	(6)400KCMIL	(5)#4/0	(5)3	F	
1600/T5	500	(15)400KCMIL	(10)400KCMIL	(5)#4/0	(5)3-1/2	F	
2500/T4	750	(18)600KCMIL	(6)600KCMIL	(6)350KCMIL	(6)4	F	
2500/T5	750	(18)600KCMIL	(12)600KCMIL	(6)350KCMIL	(6)4	F	
3000/T4	1000	(24)400KCMIL	(8)400KCMIL	(8)400KCMIL	(8)3	F	
3000/T5	1000	(24)400KCMIL	(16)400KCMIL	(8)400KCMIL	(8)3-1/2	F	

SECONDARY DERIVED SYSTEM GROUNDING ELECTRODE CONDUCTOR(GEC):

TAG	CONDUCTOR (AWG)	MIN. CONDUIT SIZE (IN)
A	(1)8	1/2
B	(1)6	1/2
C	(1)2	1/2
D	(1)1/0	3/4
E	(1)2/0	3/4
F	(1)3/0	3/4

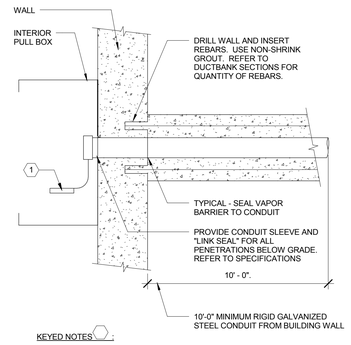

KEYED NOTES:

1. AT EACH CONDUIT, PROVIDE AN ENGRAVED PLASTIC NAMEPLATE, INDICATING CONDUIT NO. AND TERMINATION LOCATION (PANEL AND/OR ROOM), AND ATTACH TO CONDUIT WITH NYLON CABLE TIE.

8B CONCRETE ENCASED CONDUIT PENETRATION TO BUILDING DETAIL

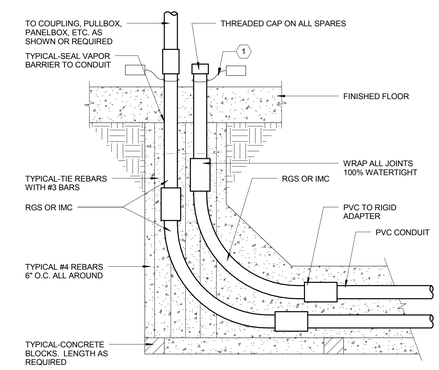

KEYED NOTES:

1. AT EACH CONDUIT, PROVIDE AN ENGRAVED PLASTIC NAMEPLATE, INDICATING CONDUIT NO. AND TERMINATION LOCATION (PANEL AND/OR ROOM), AND ATTACH TO CONDUIT WITH NYLON CABLE TIE.

8D CONDUIT STUB-UP INSIDE BUILDING DETAIL

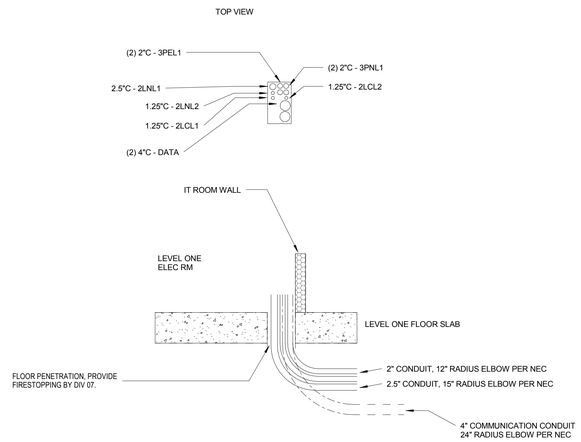

6F PLUMBING CHASE CONDUIT ENTRY DETAIL

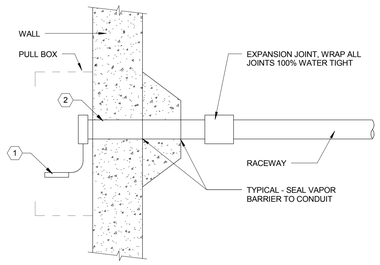

KEYED NOTES:

1. AT EACH CONDUIT, PROVIDE AN ENGRAVED PLASTIC NAMEPLATE, INDICATING CONDUIT NO. AND TERMINATION LOCATION (PANEL AND/OR ROOM), AND ATTACH TO CONDUIT WITH NYLON CABLE TIE.

2. PROVIDE CONDUIT SLEEVE AND "LINK SEAL" FOR ALL PENETRATIONS BELOW GRADE.

8F DIRECT BURIAL CONDUIT PENTRATION TO BUILDING DETAIL

CONSTRUCTION DOCUMENTS - FINAL BID DOCUMENTS

Revisions: Date

CONSULTANTS:

Landmark Engineering Group, Inc.
Civil Engineer
2834 104th Street
Urbandale, IA 50322
515.221.1322

SidePlate
Steel Frame
25909 Pala, Ste 200, 92691
Mission Viejo, CA
949.305.7889

Gateway Geotechnical, LLC
Geotechnical Engineer
17736 Edison Avenue
Chesterfield, MO 63005
636.532.7747

SWT Design
Landscape Architect
7722 Big Bend Boulevard
St. Louis, MO 63119
314.644.5700

Hinman Consulting Engineers, Inc
Physical Security
One Bush Street, Suite 510
San Francisco, CA 94104
415.621.4423

The Schachinger Group
Elevator
4255 Stoney Creek Drive
Fort Collins, CO 80525
703.608.2263

ARCHITECT/ENGINEERS:

CANNONDESIGN

© CannonDesign 2014
All rights reserved. No part of this document may be reproduced or utilized in any form, without prior written authorization by The Cannon Corporation.

Drawing Title: **FEEDER SCHEDULE AND DETAILS**

Approved: Project Director

Project Title: **John J. Pershing VAMC Clinical & Urgent Care Addition**

Location: **Poplar Bluff, Missouri**

Date: **DEC 14, 2015** | Checked: **TZ** | Drawn: **AW**

Project Number: **657-351** (CANNON DESIGN PROJECT NO. 03850.05)

Building Number

Drawing Number: **EP-512**

Dwg. of

Office of Construction and Facilities Management

Department of Veterans Affairs

VA FORM 08-6231

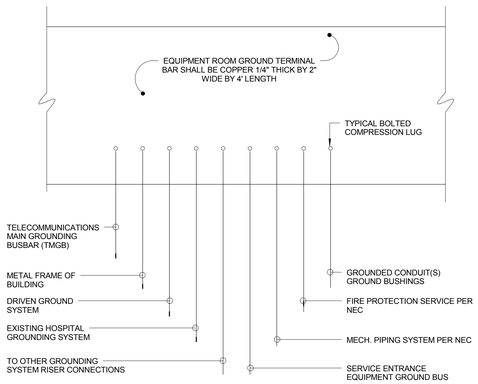

1B EQUIPMENT ROOM GROUND TERMINAL BAR

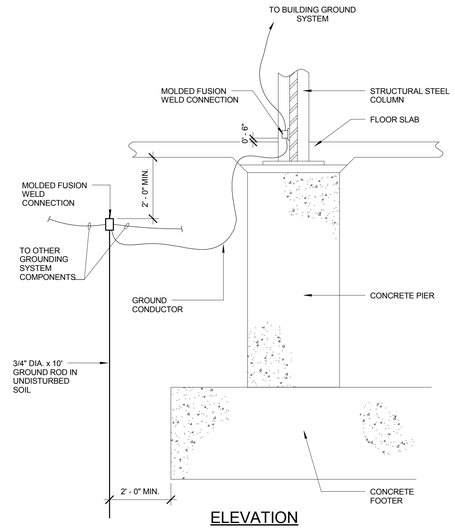

2B BUILDING GROUNDING

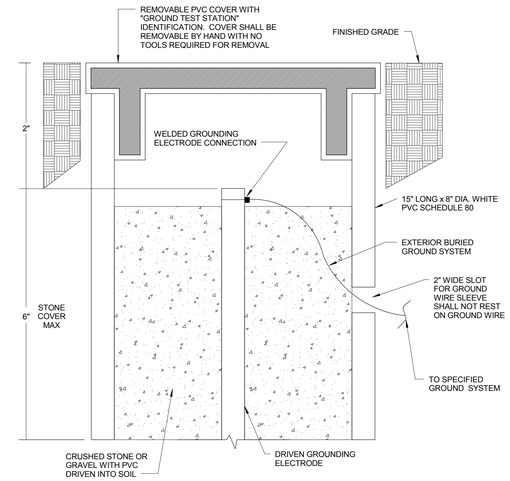

4B GROUND TEST STATION WELL

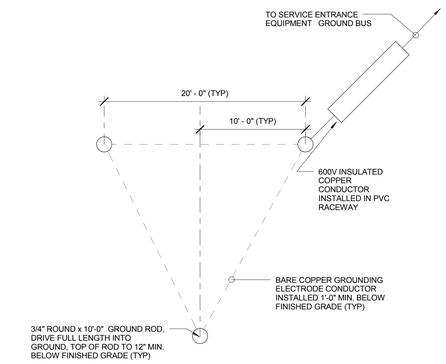

KEYED NOTES:

1. AT POINT OF ENTRANCE TO FACILITY, PROVIDE SOLDER BLOCK IN GROUNDING ELECTRODE CONDUCTOR. SEAL CONDUIT TO CONDUCTOR 100% WATERPROOF.
2. SIZE GROUNDING ELECTRODE CONDUCTOR PER NEC.

6B MAIN GROUNDING ELECTRODE GROUNDING GRID

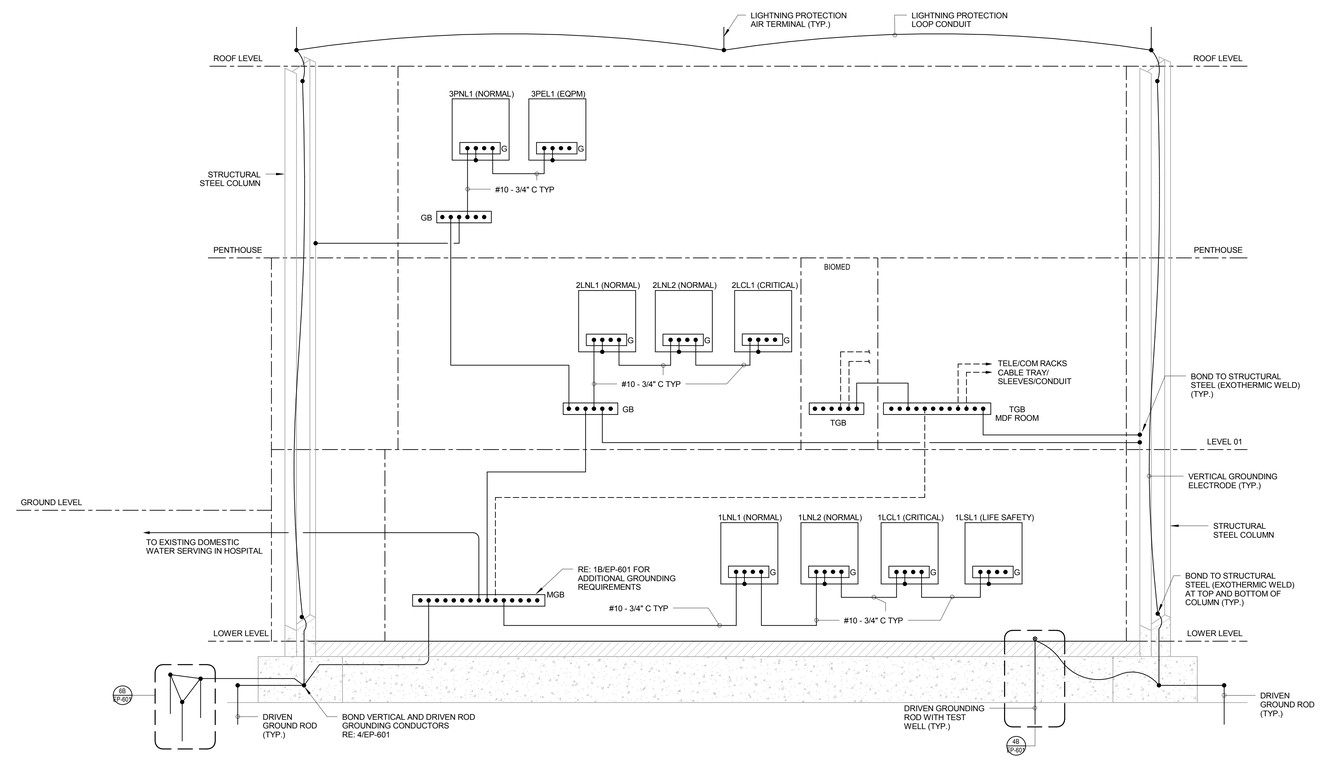

GENERAL NOTES:

A.
TELECOMMUNICATION GROUND BARS (TGB) AND ALL INTERCONNECTIONS (DASHED) ARE SHOWN HERE FOR REFERENCE ONLY. REFER TO EY-501 FOR INFORMATION REGARDING GROUND BAR SIZES, GROUNDING CONDUCTOR SIZES, RACK CABLE TRAY GROUNDING REQUIREMENTS, BONDING REQUIREMENT AND OTHER GROUNDING REQUIREMENTS UNLESS NOTED OTHERWISE.

B.
ALL UNTAGGED GROUNDING CONDUCTORS SHOWN ARE #2/0 IN 1-1/4" C UNLESS NOTED OTHERWISE.

2F GROUNDING SYSTEM RISER DIAGRAM

CONSTRUCTION DOCUMENTS - FINAL BID DOCUMENTS

Revisions:	Date

CONSULTANTS:

Landmark Engineering Group, Inc.
Civil Engineer
2834 104th Street
Urbandale, IA 50322
515.221.1322

Gateway Geotechnical, LLC
Geotechnical Engineer
17736 Edison Avenue
Chesterfield, MO 63005
636.532.7747

SWT Design
Landscape Architect
7722 Big Bend Boulevard
St. Louis, MO 63119
314.644.5700

Hinman Consulting Engineers, Inc
Physical Security
One Bush Street, Suite 510
San Francisco, CA 94104
415.621.4423

The Schachinger Group
Elevator
4255 Stoney Creek Drive
Fort Collins, CO 80525
703.608.2263

SidePlate
Steel Frame
25909 Pala, Ste 200, 92691
Mission Viejo, CA
949.305.7889

ARCHITECT/ENGINEERS:

CANNONDESIGN

© CannonDesign 2014
All rights reserved. No part of this document may be reproduced or utilized in any form, without prior written authorization by The Cannon Corporation.

Drawing Title: **GROUNDING RISER DIAGRAM AND DETAILS**

Approved: Project Director

Project Title: **John J. Pershing VAMC Clinical & Urgent Care Addition**

Location: **Poplar Bluff, Missouri**

Date: **DEC 14, 2015** | Checked: **TZ** | Drawn: **AW/CK**

Project Number: **657-351** (CANNON DESIGN PROJECT NO. 03850.05)

Building Number

Drawing Number: **EP-601**

Dwg. of

Office of Construction and Facilities Management

Department of Veterans Affairs

VA FORM 08-6231

GENERAL NOTES :

A.
NEW CIRCUIT BREAKERS OR SWITCHES SHOWN ARE 3P UNO.

B.
REFER TO 'EQUIPMENT CONNECTION / MOTOR CONTROLLER SCHEDULE' ON SHEET EP-511 FOR NEW EQUIPMENT FEEDER SIZES NOT SHOWN.

KEYED NOTES ⬡ :

1.
PROVIDE NEW FEEDER FROM EXISTING FUSED SWITCH IN SWITCHBOARD. PROVIDE NEW FUSES, SIZE AS INDICATED.

2.
PROVIDE NEW FEEDER FROM SPARE FUSED SWITCH IN SWITCHBOARD.

3.
UTILIZE EXISTING SPARE CIRCUIT BREAKER TO FEED NEW LOAD.

4.
CONTINUOUSLY AND SIMULTANEOUSLY METER LOADS FOR EACH ATS FED BY SWITCHBOARD 20 GDP FOR MINIMUM 30-DAY CYCLE. REPORT IF/WHEN FIRE PUMPS ARE OPERATED DURING THE METERING CYCLE. REPORT ALL FINDINGS TO OWNER AND ENGINEER PRIOR TO WORK.

5.
REMOVE FOUR EXISTING FUSED SWITCHES, REPLACE WITH NEW CIRCUIT BREAKER SIZE AS SHOWN

6.
PROVIDE NEW CIRCUIT BREAKER IN EXISTING SWITCHBOARD.

7.
UTILIZE AUXILLARY LUGS ON LOAD SIDE OF ATS-1 FOR NEW 300A FEEDER TO FUSED DISCONNECT CFDS-1, REFER TO ES-401 FOR LOCATION.

8.
PROVIDE 200A FUSED DISCONNECT SWITCH FEEDING 200A FEEDER TO NEW PANEL 1LCL1 LOCATED IN ADDITION. REFER TO EP-401 FOR LOCATION IN BLDG 20. FEEDER SHALL BE ROUTED THROUGH SPARE CONDUIT IN CONDUIT TUNNEL FROM BUILDING 20 TO CRAWLSPACE.

9.
PROVIDE 20A EPD 30mA GFCI BREAKER FOR HEAT TRACE. REFER TO EP-104.

10.
CHILLER TO BE SUPPLIED WITH SOFT OR TIME DELAY STAGED START FUNCTIONALITY TO MINIMIZE IN-RUSH CURRENT.

11.
REMOVE EXISTING 200A FUSE AND SWITCH, REPLACE WITH CIRCUIT BREAKER SIZE AS SHOWN.

12.
FEEDER UPSIZED FOR VOLTAGE DROP.

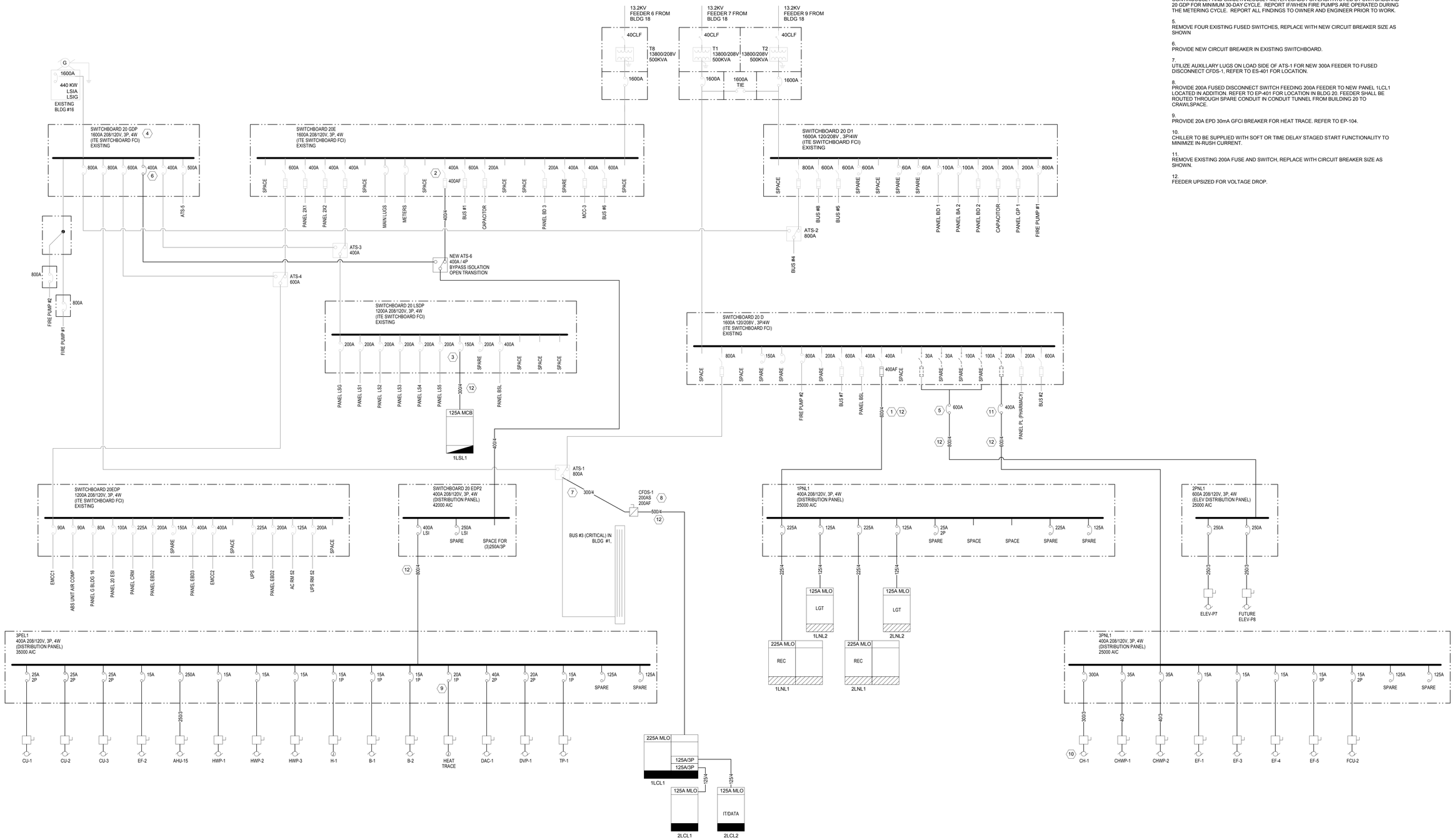

CONSTRUCTION DOCUMENTS - FINAL BID DOCUMENTS

Revisions:	Date

CONSULTANTS:

Landmark Engineering Group, Inc.
Civil Engineer
2834 104th Street
Urbandale, IA 50322
515.221.1322

Gateway Geotechnical, LLC
Geotechnical Engineer
17736 Edison Avenue
Chesterfield, MO 63005
636.532.7747

SWT Design
Landscape Architect
7722 Big Bend Beulevard
St. Louis, MO 63119
314.644.5700

Hinman Consulting Engineers, Inc
Physical Security
One Bush Street, Suite 510
San Francisco, CA 94104
415.621.4423

The Schachinger Group
Elevator
4255 Stoney Creek Drive
Fort Collins, CO 80525
703.608.2263

SidePlate
Steel Frame
25909 Pala, Ste 200, 92691
Mission Viejo, CA
949.305.7889

ARCHITECT/ENGINEERS:

CANNONDESIGN

© CannonDesign 2014
All rights reserved. No part of this document may be reproduced or utilized in any form, without prior written authorization by The Cannon Corporation.

Drawing Title: **ONE-LINE DIAGRAM**

Approved: Project Director

Project Title: **John J. Pershing VAMC Clinical & Urgent Care Addition**

Project Number: **657-351**
CANNON DESIGN PROJECT NO. 03650.05

Building Number

Location: **Poplar Bluff, Missouri**

Date: **DEC 14, 2015** | Checked: **TZ** | Drawn: **AW/CK**

Drawing Number: **EP-701**
Dwg. of

Office of Construction and Facilities Management

Department of Veterans Affairs

VA FORM 08-6231

Branch Panel: 1LNL1

Location: ELECTRICAL ROOM LL006
Supply From: 1PNL1
Mounting: Surface
Enclosure: Type 1

Volts: 120/208 Wye
Phases: 3
Wires: 4

A.I.C. Rating: 10KAIC
Mains Type: MLO
Mains Rating: 225 A
MCB Rating:
Fault Current (A): 5559

Notes:

CKT	Load Classification	Circuit Description	Trip	Poles	A		B		C		Poles	Trip	Circuit Description	Load Classification	CKT
1	Receptacle	ELEC RM	20 A	1	540	900					1	20 A	G090 GROUND LVL LOBBY	Receptacle	2
3	Receptacle	CORR/LOBBY	20 A	1			1260	380			1	20 A	GRD LVL CHARGING STATS	Other;	4
5	Heating	UH-1	20 A	1					500	180	1	20 A	GRD LVL LOBBY TV	Receptacle	6
7	Heating	UH-3	20 A	1	750	360					1	20 A	EXTERIOR RCPTS	Receptacle	8
9	Other;	WAITING AREA	20 A	1			740	0 VA			1	20 A	Spare	--	10
11	Receptacle	NURSE TRIAGE	20 A	1					720	0 VA	1	20 A	Spare	--	12
13	Other;	LL013	20 A	1	380	0 VA					1	20 A	Spare	--	14
15	Receptacle	LL013	20 A	1			540	0 VA			1	20 A	Spare	--	16
17	Other;	LL014	20 A	1					380	0 VA	1	20 A	Spare	--	18
19	Receptacle	LL014	20 A	1	540	0 VA					1	20 A	Spare	--	20
21	Other;	LL015	20 A	1			380	0 VA			1	20 A	Spare	--	22
23	Receptacle	LL015	20 A	1					540	0 VA	1	20 A	Spare	--	24
25	Receptacle	LL016	20 A	1	720	0 VA					1	20 A	Spare	--	26
27	Receptacle	LL017	20 A	1			720	0 VA			1	20 A	Spare	--	28
29	Receptacle	CLEAN STORAGE/SOILED	20 A	1					1080	0 VA	1	20 A	Spare	--	30
31	Receptacle	ALCOVE	20 A	1	900	0 VA					1	20 A	Spare	--	32
33	Receptacle	LL018	20 A	1			540	0 VA			1	20 A	Spare	--	34
35	Receptacle	LL018 LIFT	20 A	1					180	0 VA	--	--	Space	--	36
37	Receptacle	LL018	20 A	1	720	0 VA					--	--	Space	--	38
39	Motor	UH-2	20 A	1			500	0 VA			--	--	Space	--	40
41	Receptacle	LL019	20 A	1					720	0 VA	--	--	Space	--	42
43	Other;	LL019 LIFT	20 A	1	380	0 VA					--	--	Space	--	44
45	Receptacle	LL020/LL021	20 A	1			360	0 VA			--	--	Space	--	46
47	Other;	LL022	20 A	1					740	0 VA	--	--	Space	--	48
49	Receptacle	LL022 LIFT	20 A	1	180	0 VA					--	--	Space	--	50
51	Receptacle	LL023	20 A	1			720	0 VA			--	--	Space	--	52
53	Receptacle	LL024/LL031	20 A	1					360	0 VA	--	--	Space	--	54
55	Receptacle	LL029	20 A	1	540	0 VA					--	--	Space	--	56
57	Receptacle	LL029	20 A	1			720	0 VA			--	--	Space	--	58
59	Receptacle	LL029	20 A	1					720	0 VA	--	--	Space	--	60
61	Receptacle	LL029	20 A	1	540	0 VA					--	--	Space	--	62
63	Receptacle	LL030/LL008	20 A	1			900	0 VA			--	--	Space	--	64
65	Receptacle	KITCHENETTE	20 A	1					1000	0 VA	--	--	Space	--	66
67	Receptacle	MICROWAVE	20 A	1	1000	0 VA					--	--	Space	--	68
69	Receptacle	REFRIGERATOR	20 A	1			1000	0 VA			--	--	Space	--	70
71	Receptacle	CORRIDOR	20 A	1					540	0 VA	--	--	Space	--	72
73	Receptacle	COFFEE	20 A	1	1000	0 VA					--	--	Space	--	74
75	Other	EWC	20 A	1			200	0 VA			--	--	Space	--	76
77	Receptacle	PATIENT TOILETS	20 A	1					360	0 VA	--	--	Space	--	78
79	Receptacle	NURSE STATION/MED RM	20 A	1	540	0 VA					--	--	Space	--	80
81	Receptacle	MAA RCPTS	20 A	1			800	0 VA			--	--	Space	--	82
83	--	Spare	20 A	1					0 VA	0 VA	--	--	Space	--	84
			Total Load:		9990 VA		9760 VA		8020 VA						
			Total Amps:		85 A		84 A		67 A						

Legend:

Load Classification	Connected Load	Demand Factor	Estimated Demand	Panel Totals	
Heating	1250 VA	125.00%	1563 VA		
Motor	500 VA	100.00%	500 VA	**Total Conn. Load:**	27770 VA
Other	1600 VA	100.00%	1600 VA	**Total Est. Demand:**	20873 VA
Receptacle	24420 VA	70.48%	17210 VA	**Total Conn.:**	77 A
				Total Est. Demand:	58 A

Notes:
PROVIDE LUGS APPROPRIATE FOR DOUBLE SECTION PANEL.

Branch Panel: 1LSL1

Location: ELECTRICAL ROOM LL006
Supply From:
Mounting: Surface
Enclosure: Type 1

Volts: 120/208 Wye
Phases: 3
Wires: 4

A.I.C. Rating: 10KAIC
Mains Type: 125A MCB
Mains Rating: 125 A
MCB Rating:
Fault Current (A): 1798

Notes:

CKT	Load Classification	Circuit Description	Trip	Poles	A		B		C		Poles	Trip	Circuit Description	Load Classification	CKT
1	Receptacle	SMOKE CURTAIN	20 A	1	200	599					1	20 A	LOWER EGRES LGT	Lighting	2
3	Receptacle	PENTHOUSE BAS	20 A	1			200	120			1	20 A	LOWER EX SIGNS	Lighting	4
5	Receptacle	ELEV CAB LGT	20 A	1					200	108	1	20 A	LOWER EXT EGRESS LGT	Lighting	6
7	Receptacle	FUT ELEV CAB LGT	20 A	1	200	182					1	20 A	GRD EGRESS LGT	Lighting	8
9	--	Spare	20 A	1				135			1	20 A	GRD EXT EGRESS	Lighting	10
11	Receptacle	LVL 1 PWR DOORS	20 A	1					1000	20 VA	1	20 A	GRD EX SIGNS	Lighting	12
13	Receptacle	ENTRY PWR DOORS	20 A	1	1000	605					1	20 A	LVL 1 LOBBY EGRESS LGT	Lighting	14
15	--	Spare	20 A	1			0 VA	613			1	20 A	LVL 1 EGRESS LGT	Lighting	16
17	--	Spare	20 A	1					0 VA	120	1	20 A	LVL 1 EX SIGNS	Lighting	18
19	--	Spare	20 A	1	0 VA	192					1	20 A	SOUTH STAIR EGRESS LGT	Lighting	20
21	--	Spare	20 A	1			0 VA	200			1	20 A	LOWER BAS	Receptacle	22
23	--	Spare	20 A	1					0 VA	200	1	20 A	LVL 1 BAS	Receptacle	24
25	--	Spare	20 A	1	0 VA	220					1	20 A	WALKWAY LGT	Lighting; Other	26
27	--	Spare	20 A	1			0 VA	200			1	20 A	HELIPAD LGTS	Receptacle	28
29	--	Spare	20 A	1					0 VA	202	1	20 A	AMBULANCE DRIVE LGT	Lighting	30
31	--	Space	--	--	0 VA	301					1	20 A	MECH PENTHOUSE	Lighting	32
33	--	Space	--	--			0 VA	30 VA			1	20 A	MECH PENTHOUSE EX	Lighting	34
35	--	Space	--	--					0 VA	45 VA	1	20 A	OBSTRUCTION LIGHTS	Lighting	36
37	--	Space	--	--	0 VA	0 VA					--	--	Space	--	38
39	--	Space	--	--			0 VA	0 VA			--	--	Space	--	40
41	--	Space	--	--					0 VA	0 VA	--	--	Space	--	42
			Total Load:		4999 VA		1498 VA		1895 VA						
			Total Amps:		42 A		12 A		16 A						

Legend:

Load Classification	Connected Load	Demand Factor	Estimated Demand	Panel Totals	
Lighting	3284 VA	125.00%	4105 VA		
Other	208 VA	100.00%	208 VA	**Total Conn. Load:**	8792 VA
Receptacle	5300 VA	100.00%	5300 VA	**Total Est. Demand:**	9613 VA
				Total Conn.:	24 A
				Total Est. Demand:	27 A

Notes:

Branch Panel: 1LCL1

Location: ELECTRICAL ROOM LL006
Supply From:
Mounting: Surface
Enclosure: Type 1

Volts: 120/208 Wye
Phases: 3
Wires: 4

A.I.C. Rating: 10KAIC
Mains Type: MLO
Mains Rating: 225 A
MCB Rating:
Fault Current (A): 3757

Notes:

CKT	Load Classification	Circuit Description	Trip	Poles	A		B		C		Poles	Trip	Circuit Description	Load Classification	CKT
1	Lighting	POLICE/ELEC LGT	20 A	1	448	1216					1	20 A	LOWER EXAM LGTS	Lighting	2
3	Receptacle	LL003	20 A	1			720	180			1	20 A	LL013	Receptacle	4
5	Receptacle	LL003 MONITORS	20 A	1					360	180	1	20 A	LL014	Receptacle	6
7	Receptacle	LL003	20 A	1	1080	180					1	20 A	LL015	Receptacle	8
9	Lighting	ELEV SHAFT LGTS	20 A	1			116	900			1	20 A	CORRIDOR	Receptacle	10
11	Receptacle	ELEV SHAFT RCPTS	20 A	1					720	200	1	20 A	AMBULANCE HEAT TRACE	Receptacle	12
13	Receptacle	ELEV PIT SUMP	20 A	1	1000	180					1	20 A	LL018	Receptacle	14
15	Receptacle	ELEV PIT SUMP	20 A	1			1000	180			1	20 A	LL019	Receptacle	16
17	Lighting	ELEV MACHINE RM LGTS	20 A	1					128	180	1	20 A	LL022	Receptacle	18
19	Receptacle	ELEV MACHINE RM	20 A	1	360	180					1	20 A	LL023	Receptacle	20
21								720			1	20 A	LL027	Receptacle	22
23	Receptacle	AMBULANCE ENTRANCE	20 A	1					200	720	1	20 A	LL027	Receptacle	24
25	Receptacle	AMBULANCE EXIT	20 A	1	200	360					1	20 A	LL027	Receptacle	26
27	Receptacle	AMBULANCE INTERCOM	20 A	1			200	720			1	20 A	LL028 REF PYXIS	Receptacle	28
29	--	Spare	20 A	1					0 VA	900	1	20 A	LL026/LL028	Receptacle	30
31	--	Spare	20 A	1	0 VA	1000					1	20 A	MAA ALARM PANELS	Receptacle	32
33	--	Spare	20 A	1			0 VA	720			1	20 A	MAA RCPTS	Receptacle	34
35	--	Spare	20 A	1					0 VA	720	1	20 A	MAA RCPTS	Receptacle	36
37	--	Spare	20 A	1	0 VA	500					1	20 A	MAA PRINTER	Receptacle	38
39	--	Spare	20 A	1			0 VA	360			1	20 A	MAA RCPTS	Receptacle	40
41	--	Spare	20 A	1					0 VA	500	1	20 A	CP-1	Motor	42
43	--	Spare	20 A	1	0 VA	0 VA					1	20 A	Spare	--	44
45	--	Spare	20 A	1			0 VA	0 VA			1	20 A	Spare	--	46
47	--	Spare	20 A	1					0 VA	0 VA	1	20 A	Spare	--	48
49	--	Spare	20 A	1	0 VA	0 VA					1	20 A	Spare	--	50
51	--	Spare	20 A	1			0 VA	0 VA			1	20 A	Spare	--	52
53	--	Space	--	--					0 VA	0 VA	--	--	Space	--	54
55	--	Space	--	--	0 VA	0 VA					--	--	Space	--	56
57	--	Space	--	--			0 VA	0 VA			--	--	Space	--	58
59	--	Space	--	--					0 VA	0 VA	--	--	Space	--	60
61	--	Space	--	--	0 VA	0 VA					--	--	Space	--	62
63	--	Space	--	--			0 VA	0 VA			--	--	Space	--	64
65	--	Space	--	--					0 VA	0 VA	--	--	Space	--	66
67	--	Space	--	--	0 VA	0 VA					--	--	Space	--	68
69	--	Space	--	--			0 VA	0 VA			--	--	Space	--	70
71	--	Space	--	--					0 VA	4340	3	125 A	2LCL1	Lighting; Other;	72
73	--	Space	--	--	0 VA	3476					--	--	--	--	74
75	--	Space	--	--			0 VA	3444			--	--	--	--	76
77	--	Space	--	--					0 VA	2640	3	125 A	2LCL2	Other;	78
79	--	Space	--	--	0 VA	720					--	--	--	--	80
81	--	Space	--	--			0 VA	2280			--	--	--	--	82
83	--	Space	--	--					0 VA						84
			Total Load:		10900 VA		11540 VA		11788 VA						
			Total Amps:		91 A		97 A		99 A						

Legend:

Load Classification	Connected Load	Demand Factor	Estimated Demand	Panel Totals	
Lighting	3768 VA	125.00%	4710 VA		
Motor	500 VA	100.00%	500 VA	**Total Conn. Load:**	34228 VA
Other	3200 VA	100.00%	3200 VA	**Total Est. Demand:**	26790 VA
Receptacle	26760 VA	68.68%	18380 VA	**Total Conn.:**	95 A
				Total Est. Demand:	74 A

Notes:
PROVIDE LUGS APPROPRIATE FOR DOUBLE SECTION PANEL.

Branch Panel: 1LNL2

Location: ELECTRICAL ROOM LL006
Supply From: 1PNL1
Mounting: Surface
Enclosure: Type 1

Volts: 120/208 Wye
Phases: 3
Wires: 4

A.I.C. Rating: 10KAIC
Mains Type: MLO
Mains Rating: 125 A
MCB Rating:
Fault Current (A): 5067

Notes:

CKT	Load Classification	Circuit Description	Trip	Poles	A		B		C		Poles	Trip	Circuit Description	Load Classification	CKT
1	Lighting	ENTRY LGT	20 A	1	372	0 VA					--	--	Space	--	2
3	Lighting	LOBBY/CORR LGT	20 A	1			1393	0 VA			--	--	Space	--	4
5	Lighting; Other	OFFICE/STORAGE LGT	20 A	1					997	0 VA	--	--	Space	--	6
7	Lighting; Other	MPR/OFFICE LGT	20 A	1	725	0 VA					--	--	Space	--	8
9	Lighting	CANOPY LGT	20 A	1			150	0 VA			--	--	Space	--	10
11	Lighting	GRD LOBBY LGT	20 A	1					502	0 VA	--	--	Space	--	12
13	Receptacle	RELAY PNL/ELC-1 / ELC-2	20 A	1	580	0 VA					--	--	Space	--	14
15	Lighting	PARKING LOT LGT	20 A	1			808	0 VA			--	--	Space	--	16
17	Lighting	PARKING LOT LGT	20 A	1					606	0 VA	--	--	Space	--	18
19	--	Spare	20 A	1	0 VA	0 VA					--	--	Space	--	20
21	--	Spare	20 A	1			0 VA	0 VA			--	--	Space	--	22
23	--	Spare	20 A	1					0 VA	0 VA	--	--	Space	--	24
25	--	Spare	20 A	1	0 VA	0 VA					--	--	Space	--	26
27	--	Spare	20 A	1			0 VA	0 VA			--	--	Space	--	28
29	--	Spare	20 A	1					0 VA	0 VA	--	--	Space	--	30
31	--	Spare	20 A	1	0 VA	0 VA					--	--	Space	--	32
33	--	Spare	20 A	1			0 VA	0 VA			--	--	Space	--	34
35	--	Spare	20 A	1					0 VA	0 VA	--	--	Space	--	36
37	--	Space	--	--	0 VA	0 VA					--	--	Space	--	38
39	--	Space	--	--			0 VA	0 VA			--	--	Space	--	40
41	--	Space	--	--					0 VA	0 VA	--	--	Space	--	42
			Total Load:		1677 VA		2351 VA		2105 VA						
			Total Amps:		14 A		20 A		18 A						

Legend:

Load Classification	Connected Load	Demand Factor	Estimated Demand	Panel Totals	
Lighting	5385 VA	125.00%	6731 VA		
Other	168 VA	100.00%	168 VA	**Total Conn. Load:**	6133 VA
Receptacle	580 VA	100.00%	580 VA	**Total Est. Demand:**	7479 VA
				Total Conn.:	17 A
				Total Est. Demand:	21 A

Notes:

1LNL1	**1LSL1**	**1LCL1**
1LNL2		

CONSTRUCTION DOCUMENTS - FINAL BID DOCUMENTS

Revisions: Date

CONSULTANTS:

Landmark Engineering Group, Inc.
Civil Engineer
2834 104th Street
Urbandale, IA 50322
515.221.1322

Gateway Geotechnical, LLC
Geotechnical Engineer
17736 Edison Avenue
Chesterfield, MO 63005
636.532.7747

SWT Design
Landscape Architect
7722 Big Bend Boulevard
St. Louis, MO 63119
314.644.5700

Hinman Consulting Engineers, Inc
Physical Security
One Bush Street, Suite 510
San Francisco, CA 94104
415.621.4423

The Schachinger Group
Elevator
4255 Stoney Creek Drive
Fort Collins, CO 80525
703.608.2263

SidePlate
Steel Frame
25909 Pala, Ste 200, 92691
Mission Viejo, CA
949.305.7889

ARCHITECT/ENGINEERS:

CANNONDESIGN

© CannonDesign 2014
All rights reserved. No part of this document may be reproduced or utilized in any form, without prior written authorization by The Cannon Corporation.

Drawing Title: **PANEL SCHEDULES**

Approved: Project Director

Project Title: **John J. Pershing VAMC Clinical & Urgent Care Addition**

Location: **Poplar Bluff, Missouri**

Date: **DEC 14, 2015** | Checked: **TZ** | Drawn: **AW/CK**

Project Number: **657-351**
CANNON DESIGN PROJECT NO. 03850.05

Building Number

Drawing Number: **EP-801**
Dwg. of

Office of Construction and Facilities Management

Department of Veterans Affairs

VA FORM 08-6231

Branch Panel: 2LNL1

Location: ELECTRICAL 1222
Supply From: 1PNL1
Mounting: Surface
Enclosure: Type 1
Volts: 120/208 Wye
Phases: 3
Wires: 4
A.I.C. Rating: 10KAIC
Mains Type: MLO
Mains Rating: 225 A
MCB Rating:
Fault Current (A): 4418

Notes:

CKT	Load Classification	Circuit Description	Trip	Poles	A		B		C		Poles	Trip	Circuit Description	Load Classification	CKT
1	Receptacle	ELEC RM	20 A	1	360	380					1	20 A	1216 WORKSTATION	Other;	2
3	Receptacle	1200 LOBBY	20 A	1			900	360			1	20 A	1216 WORKSTATION	Receptacle	4
5	Other	1200 CHARGING STAT	20 A	1					200	360	1	20 A	1216 WORKSTATION	Receptacle	6
7	Receptacle	1200 TV	20 A	1	180	560					1	20 A	1216 WORKSTATION	Other;	8
9	Receptacle	1200 COUNTER	20 A	1			1000	920			1	20 A	1217	Other;	10
11	Receptacle	1200 COFFEE	20 A	1					1000	400	1	20 A	1218 LIFT	Other	12
13	Receptacle	1234 VENDING MACHINE	20 A	1	1500	500					1	20 A	1218 DENTAL CHAIR	Receptacle	14
15	Other	1234 EWC - GFI CB	20 A	1			200	360			1	20 A	1218	Receptacle	16
17	Receptacle	1202 WAITING AREA	20 A	1					720	360	1	20 A	1218	Receptacle	18
19	Receptacle	1202 WAITING AREA TV	20 A	1	180	400					1	20 A	1219 LIFT	Other	20
21	Other	1202 CHARGING STAT	20 A	1			200	500			1	20 A	1219 DENTAL CHAIR	Receptacle	22
23	Receptacle	1201 PRINTER	20 A	1					1000	360	1	20 A	1219	Receptacle	24
25	Receptacle	1201 RCPTS	20 A	1	560	360					1	20 A	1219	Receptacle	26
27	Receptacle	1201 RCPTS	20 A	1			360	360			1	20 A	1225 TV'S	Receptacle	28
29	Receptacle	1201 RCPTS	20 A	1					720	540	1	20 A	1225 RCPTS	Receptacle	30
31	Receptacle	1226/1227	20 A	1	360	180					1	20 A	1225 FLOORBOX	Receptacle	32
33	Receptacle	1223	20 A	1			720	400			1	20 A	1204 LIFT	Other	34
35	Receptacle	1221 WORKSTATIONS	20 A	1					720	500	1	20 A	1204 DENTAL CHAIR	Receptacle	36
37	Receptacle	1221 WORKSTATIONS	20 A	1	720	540					1	20 A	1204	Receptacle	38
39	Receptacle	1221	20 A	1			360	720			1	20 A	1204	Receptacle	40
41	Receptacle	1220	20 A	1					360	400	1	20 A	1205 LIFT	Other	42
43	Other	1210 PANO XRAY	30 A	2	1600	500					1	20 A	1205 DENTAL CHAIR	Receptacle	44
45	--	--	--	--			0 VA	360			1	20 A	1205	Receptacle	46
47	Receptacle	1210 PANO XRAY	20 A	1					180	360	1	20 A	1205	Receptacle	48
49	Receptacle	1210 PANO XRAY TECH	20 A	1	720	400					1	20 A	1206 LIFT	Other	50
51	Receptacle	1208 XRAY TECH	20 A	1			720	500			1	20 A	1206 DENTAL CHAIR	Receptacle	52
53	Receptacle	1208 RCPT	20 A	1					180	360	1	20 A	1206	Receptacle	54
55	Receptacle	1208 XRAY UNIT	20 A	1	1500	360					1	20 A	1206	Receptacle	56
57	Other	1208 PANO XRAY	30 A	2			1600	400			1	20 A	1207 LIFT	Other	58
59	--	--	--	--					0 VA	500	1	20 A	1207 DENTAL CHAIR	Receptacle	60
61	Receptacle	1208	20 A	1	180	360					1	20 A	1207	Receptacle	62
63	Other;	1212/1213	20 A	1			1100	360			1	20 A	1207	Receptacle	64
65	Receptacle	1214/1228	20 A	1					360	540	1	20 A	1211	Receptacle	66
67	Receptacle	PENTHOUSE OUTDOOR	20 A	1	800	720					1	20 A	1211	Receptacle	68
69	Receptacle	PENTHOUSE INDOOR	20 A	1			600	900			1	20 A	1211	Receptacle	70
71	Receptacle	ROOF RCPT	20 A	1					200	900	1	20 A	1211	Receptacle	72
73	--	Spare	20 A	1	0 VA	1080					1	20 A	1211	Receptacle	74
75	--	Spare	20 A	1			0 VA	1080			1	20 A	1211	Receptacle	76
77	--	Spare	20 A	1					0 VA	900	1	20 A	1211	Receptacle	78
79	--	Spare	20 A	1	0 VA	900					1	20 A	1211	Receptacle	80
81	--	Spare	20 A	1			0 VA	0 VA			1	20 A	Spare	--	82
83	--	Spare	20 A	1					0 VA	0 VA	1	20 A	Spare	--	84
			Total Load:		15900 VA		14980 VA		12120 VA						
			Total Amps:		136 A		129 A		101 A						

Legend:

Load Classification	Connected Load	Demand Factor	Estimated Demand	Panel Totals	
Other	7000 VA	100.00%	7000 VA		
Receptacle	36000 VA	63.89%	23000 VA	**Total Conn. Load:**	43000 VA
				Total Est. Demand:	30000 VA
				Total Conn.:	119 A
				Total Est. Demand:	83 A

Notes:
PROVIDE LUGS APPROPRIATE FOR DOUBLE SECTION PANEL.

Branch Panel: 2LNL2

Location: ELECTRICAL 1222
Supply From: 1PNL1
Mounting: Surface
Enclosure: Type 1
Volts: 120/208 Wye
Phases: 3
Wires: 4
A.I.C. Rating: 10KAIC
Mains Type: MLO
Mains Rating: 125 A
MCB Rating:
Fault Current (A): 3353

Notes:

CKT	Load Classification	Circuit Description	Trip	Poles	A		B		C		Poles	Trip	Circuit Description	Load Classification	CKT
1	Lighting	OPEN LOBBY LGT	20 A	1	912	0 VA					--	--	Space	--	2
3	Lighting	LOBBY LGT	20 A	1			260	0 VA			--	--	Space	--	4
5	Lighting	RECEPTION LGT	20 A	1					550	0 VA	--	--	Space	--	6
7	Lighting; Other	CORRIDOR LGT	20 A	1	1830	0 VA					--	--	Space	--	8
9	Lighting	DENTAL TREATMENT LGT	20 A	1			1204	0 VA			--	--	Space	--	10
11	Lighting; Other	DENTAL SUPPORT LGT	20 A	1					886	0 VA	--	--	Space	--	12
13	Lighting	DENTAL TREATMENT LGT	20 A	1	858	0 VA					--	--	Space	--	14
15	Lighting	CONF ROOM LGT	20 A	1			153	0 VA			--	--	Space	--	16
17	Lighting	MECH PENTHOUSE LGTS	20 A	1					647	0 VA	--	--	Space	--	18
19	Receptacle	RELAY PNL	20 A	1	180	0 VA					--	--	Space	--	20
21	--	Spare	20 A	1			0 VA	0 VA			--	--	Space	--	22
23	--	Spare	20 A	1					0 VA	0 VA	--	--	Space	--	24
25	--	Spare	20 A	1	0 VA	0 VA					--	--	Space	--	26
27	--	Spare	20 A	1			0 VA	0 VA			--	--	Space	--	28
29	--	Spare	20 A	1					0 VA	0 VA	--	--	Space	--	30
31	--	Spare	20 A	1	0 VA	0 VA					--	--	Space	--	32
33	--	Spare	20 A	1			0 VA	0 VA			--	--	Space	--	34
35	--	Space	--	--					0 VA	0 VA	--	--	Space	--	36
37	--	Space	--	--	0 VA	0 VA					--	--	Space	--	38
39	--	Space	--	--			0 VA	0 VA			--	--	Space	--	40
41	--	Space	--	--					0 VA	0 VA	--	--	Space	--	42
			Total Load:		3780 VA		1617 VA		2083 VA						
			Total Amps:		32 A		13 A		18 A						

Legend:

Load Classification	Connected Load	Demand Factor	Estimated Demand	Panel Totals	
Lighting	7188 VA	125.00%	8985 VA		
Other	112 VA	100.00%	112 VA	**Total Conn. Load:**	7480 VA
Receptacle	180 VA	100.00%	180 VA	**Total Est. Demand:**	9277 VA
				Total Conn.:	21 A
				Total Est. Demand:	26 A

Notes:

Branch Panel: 2LCL1

Location:
Supply From: 1LCL1
Mounting: Surface
Enclosure: Type 1
Volts: 120/208 Wye
Phases: 3
Wires: 4
A.I.C. Rating: 10KAIC
Mains Type: MLO
Mains Rating: 125 A
MCB Rating:
Fault Current (A): 2510

Notes:

CKT	Load Classification	Circuit Description	Trip	Poles	A		B		C		Poles	Trip	Circuit Description	Load Classification	CKT
1	Receptacle	1204	20 A	1	720	300					1	20 A	1218-1219 EXAM LGTS	Lighting	2
3	Receptacle	1205	20 A	1			720	256			1	20 A	MAA WORKROOM	Lighting	4
5	Receptacle	1206	20 A	1					720	704	1	20 A	ELEC/MECH RM	Lighting	6
7	Receptacle	1207	20 A	1	720	600					1	20 A	1204-1207 EXAM LGTS	Lighting	8
9	Receptacle	1218	20 A	1			720	180			1	20 A	ELEC RM	Receptacle	10
11	Receptacle	1219	20 A	1					720	180	1	20 A	1215 DENTAL MECH RM	Receptacle	12
13	Other;	1224 WORKSTATION	20 A	1	380	540					1	20 A	1234 CORRIDOR	Receptacle	14
15	Receptacle	1224 WORKSTATION	20 A	1			360	540			1	20 A	1233 CORRIDOR	Receptacle	16
17	Other;	1224 WORKSTATION	20 A	1					380	360	1	20 A	1220 RCPTS	Receptacle	18
19	Receptacle	1224 WORKSTATION	20 A	1	360	360					1	20 A	1220 RCPTS	Receptacle	20
21	Receptacle	1224 PRINTER	20 A	1			500	0 VA			1	20 A	Spare	--	22
23	Other;	1224 WORKSTATION	20 A	1					380	0 VA	1	20 A	Spare	--	24
25	Receptacle	1224 WORKSTATION	20 A	1	360	0 VA					1	20 A	Spare	--	26
27	Other	AHU-15 LGTS / RCPT	20 A	1			200	0 VA			1	20 A	Spare	--	28
29	--	Spare	20 A	1					0 VA	0 VA	1	20 A	Spare	--	30
31	--	Spare	20 A	1	0 VA	0 VA					--	--	Space	--	32
33	--	Space	--	--			0 VA	0 VA			--	--	Space	--	34
35	--	Space	--	--					0 VA	0 VA	--	--	Space	--	36
37	--	Space	--	--	0 VA	0 VA					--	--	Space	--	38
39	--	Space	--	--			0 VA	0 VA			--	--	Space	--	40
41	--	Space	--	--					0 VA	0 VA	--	--	Space	--	42
			Total Load:		4340 VA		3476 VA		3444 VA						
			Total Amps:		36 A		29 A		29 A						

Legend:

Load Classification	Connected Load	Demand Factor	Estimated Demand	Panel Totals	
Lighting	1860 VA	125.00%	2325 VA		
Other	800 VA	100.00%	800 VA	**Total Conn. Load:**	11260 VA
Receptacle	8600 VA	100.00%	8600 VA	**Total Est. Demand:**	11725 VA
				Total Conn.:	31 A
				Total Est. Demand:	33 A

Notes:

Branch Panel: 2LCL2

Location: TELE/DATA ROOM 1203
Supply From: 1LCL1
Mounting: Surface
Enclosure: Type 1
Volts: 120/208 Wye
Phases: 3
Wires: 4
A.I.C. Rating: 10KAIC
Mains Type: MLO
Mains Rating: 125 A
MCB Rating:
Fault Current (A):

Notes:

CKT	Load Classification	Circuit Description	Trip	Poles	A		B		C		Poles	Trip	Circuit Description	Load Classification	CKT
1	--	Space	--	--	0 VA	1200					2	20 A	IT SERVER RACK	Other	2
3	--	Space	--	--			0 VA	0 VA			--	--	--	--	4
5	--	Space	--	--					0 VA	1200	2	20 A	IT SERVER RACK	Other	6
7	--	Space	--	--	0 VA	0 VA					--	--	--	--	8
9	--	Space	--	--			0 VA	360			1	20 A	CATV RCPT	Receptacle	10
11	--	Space	--	--					0 VA	720	1	20 A	IT RCPTS	Receptacle	12
13	--	Space	--	--	0 VA	720					1	20 A	IT RCPTS	Receptacle	14
15	--	Space	--	--			0 VA	360			1	20 A	IT RCPTS	Receptacle	16
17	--	Space	--	--					0 VA	360	1	20 A	BIOMED RACK	Receptacle	18
19	--	Space	--	--	0 VA	720					1	20 A	BIOMED RCPTS	Receptacle	20
21	--	Space	--	--			0 VA	0 VA			1	20 A	Spare	--	22
23	--	Space	--	--					0 VA	0 VA	1	20 A	Spare	--	24
25	--	Space	--	--	0 VA	0 VA					1	20 A	Spare	--	26
27	--	Space	--	--			0 VA	0 VA			1	20 A	Spare	--	28
29	--	Space	--	--					0 VA	0 VA	1	20 A	Spare	--	30
31	--	Space	--	--	0 VA	0 VA					1	20 A	Spare	--	32
33	--	Space	--	--			0 VA	0 VA			1	20 A	Spare	--	34
35	--	Space	--	--					0 VA	0 VA	--	--	Space	--	36
37	--	Space	--	--	0 VA	0 VA					--	--	Space	--	38
39	--	Space	--	--			0 VA	0 VA			--	--	Space	--	40
41	--	Space	--	--					0 VA	0 VA	--	--	Space	--	42
			Total Load:		2640 VA		720 VA		2280 VA						
			Total Amps:		24 A		6 A		21 A						

Legend:

Load Classification	Connected Load	Demand Factor	Estimated Demand	Panel Totals	
Other	2400 VA	100.00%	2400 VA		
Receptacle	3240 VA	100.00%	3240 VA	**Total Conn. Load:**	5640 VA
				Total Est. Demand:	5640 VA
				Total Conn.:	16 A
				Total Est. Demand:	16 A

Notes:

2LNL1	2LCL1	2LCL2
2LNL2		

CONSTRUCTION DOCUMENTS - FINAL BID DOCUMENTS

Revisions: Date

CONSULTANTS:

Landmark Engineering Group, Inc.
Civil Engineer
2834 104th Street
Urbandale, IA 50322
515.221.1322

Gateway Geotechnical, LLC
Geotechnical Engineer
17736 Edison Avenue
Chesterfield, MO 63005
636.532.7747

SWT Design
Landscape Architect
7722 Big Bend Boulevard
St. Louis, MO 63119
314.644.5700

Hinman Consulting Engineers, Inc
Physical Security
One Bush Street, Suite 510
San Francisco, CA 94104
415.621.4423

The Schachinger Group
Elevator
4255 Stoney Creek Drive
Fort Collins, CO 80525
703.608.2263

SidePlate
Steel Frame
25909 Pala, Ste 200, 92691
Mission Viejo, CA
949.305.7889

ARCHITECT/ENGINEERS:

CANNONDESIGN

© CannonDesign 2014
All rights reserved. No part of this document may be reproduced or utilized in any form, without prior written authorization by The Cannon Corporation.

Drawing Title: **PANEL SCHEDULES**

Approved: Project Director

Project Title: **John J. Pershing VAMC Clinical & Urgent Care Addition**

Location: **Poplar Bluff, Missouri**

Date: **DEC 14, 2015** | Checked: **TZ** | Drawn: **AW/CK**

Project Number: **657-351**
CANNON DESIGN PROJECT NO. 03850.05

Building Number

Drawing Number: **EP-802**
Dwg. of

Office of Construction and Facilities Management

Department of Veterans Affairs

VA FORM 08-6231

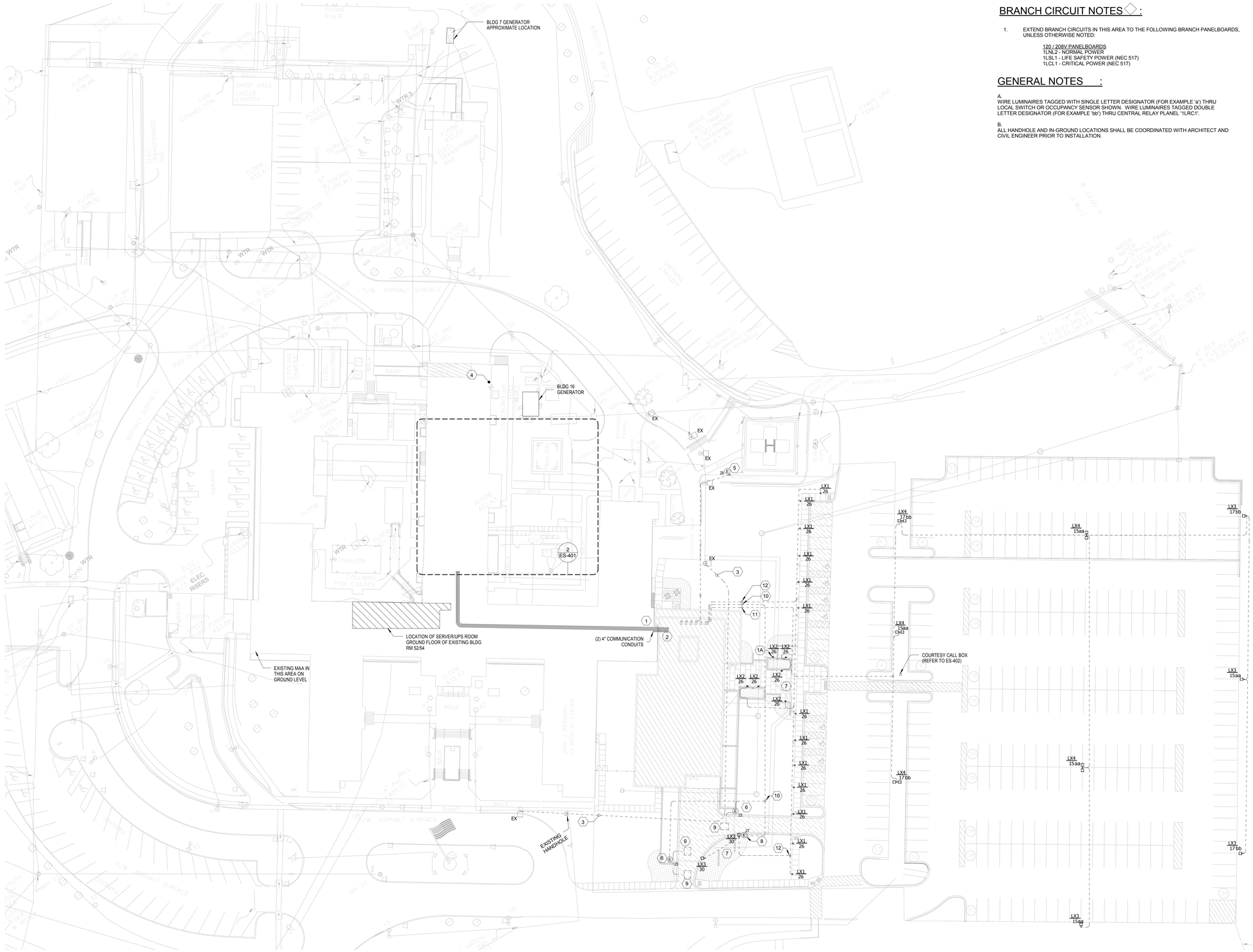

BRANCH CIRCUIT NOTES ◇ :

1. EXTEND BRANCH CIRCUITS IN THIS AREA TO THE FOLLOWING BRANCH PANELBOARDS, UNLESS OTHERWISE NOTED:

   120 / 208V PANELBOARDS
   1LNL2 - NORMAL POWER
   1LSL1 - LIFE SAFETY POWER (NEC 517)
   1LCL1 - CRITICAL POWER (NEC 517)

GENERAL NOTES :

A.
WIRE LUMINAIRES TAGGED WITH SINGLE LETTER DESIGNATOR (FOR EXAMPLE 'a') THRU LOCAL SWITCH OR OCCUPANCY SENSOR SHOWN. WIRE LUMINAIRES TAGGED DOUBLE LETTER DESIGNATOR (FOR EXAMPLE 'bb') THRU CENTRAL RELAY PLANEL '1LRC1'.

B.
ALL HANDHOLE AND IN-GROUND LOCATIONS SHALL BE COORDINATED WITH ARCHITECT AND CIVIL ENGINEER PRIOR TO INSTALLATION.

KEYED NOTES ⬡ :

1.
APPROXIMATE ROUTING OF FEEDERS FOR NEW ADDITION APPROACHING EXISTING FOUNDATION WALL IN CRAWL SPACE. (2) 4" COMMUNICATION CONDUITS STUBBED TO CRAWL SPACE SIDE OF FOUNDATION WALL. CORE DRILL EXISTING FOUNDATION AND PROVIDE SEALED CONDUIT PENETRATION FOR EACH CONDUIT. COORDINATE DETAILS OF PENTRETRATION WITH STRUCTURAL DRAWINGS. REFER TO EP-102 FOR PROPOSED ROUTING THROUGH ADDITION. MINIMIZE UNNECESSARY BENDS IN CONDUIT ROUTE.

2.
ROUTE CONDUITS FROM FOUNDATION PENETRATION BENEATH SLAB TO NEW ELECTRICAL ROOM. REFER TO EP-102.

3.
PROVIDE NEW BRANCH CIRCUIT WIRING AND CONDUIT BETWEEN EXISTING HANDHOLE AND EXISTING LUMINIARE SHOWN TO REMAIN. CIRCUIT ORIGINATES FROM PANEL 'BSL' LOCATED IN CRAWL SPACE. REFER TO ES-401 FOR DETAILS. MATCH EXISTING WIRE AND CONDUIT SIZE OF EXISTING CIRCUIT, ASSUME 1-1/2" CONDUIT AND #10 CONDUCTORS (3, 208V/1P CIRCUITS). COORDINATE EXACT ROUTING WITH CIVIL CONTRACTOR.

4.
EXISTING DOMESTIC WATER SERVICE. BOND GROUNDING ELECTRODE SERVING THE ADDITION NEXT TO EXISTING GROUNDING ELECTRODE BOND. REFER TO EP-601 FOR ADDITIONAL INFORMATION.

5.
PROVIDE CIRCUIT TO REFEED EXISTING HELIPAD LIGHTS FROM 1LSL1 CONTROLLED AT MAA. REFER TO SC/EP-401 FOR ADDITIONAL DETAILS. COORDINATE ROUTING WITH CIVIL CONTRACTOR.

6.
PROVIDE CONNECTION FOR POWER OPERATED AMBULANCE GATE FROM 1LCL1. COORDINATE EXACT LOCATION AND REQUIREMENTS WITH CIVIL CONTRACTOR.

7.
WIRE WALKWAY BOLLARDS (LX1), STEP LIGHTS (LX2), AND (2) POLE MOUNTED FIXTURES (LX3) AT AMBULANCE ENTRY THROUGH TO LIFE SAFETY CIRCUITS FROM 1LSL1 THROUGH EM LIGHTING CONTACTOR. SEE DETAIL 6F/EL-501.

8.
PROVIDE POWER CONNECTION FROM 1CL1 FOR AMBULANCE GATE INTERCOM. REFER TO ES-402 FOR ADDITIONAL DETAILS.

9.
REFER TO ES-402 FOR LOOP DETECTOR LOCATION AND INSTALLATION.

10.
PROVIDE HANDHOLE FOR CIRCUIT AS SHOWN FED FROM 1LCL1 SERVING MOTOR CONNECTIONS IN AMBULANCE GATE AREA.

11.
PROVIDE HANDHOLE FOR CIRCUITS FED FROM 1LNL2 FOR PARKING LOT LIGHTING AS SHOWN.

12.
PROVIDE HANDHOLE FOR CIRCUITS FROM 1LSL1 SERVING WALKWAY LIGHTS (LX1, LX2) AND POLE MOUNTED FIXTURES AT AMBULANCE ENTRY (LX3).

13.
DO NOT INSTALL 'LX2' FIXTURES OR ASSOCIATED CONDUITS IF BID ALTERNATE 9 IS ACCEPTED. TYP. COORDINATE WITH CIVIL ENGINEER.

ALTERNATE KEYED NOTES ⬡ :

1A.
DO NOT INSTALL 'LX2' FIXTURES OR ASSOCIATED CONDUITS IF BID ALTERNATE 9 IS ACCEPTED. TYP. COORDINATE WITH CIVIL ENGINEER.

1 ELECTRICAL SITE PLAN
1" = 30'-0"

NORTH ARROW

CONSTRUCTION DOCUMENTS - FINAL BID DOCUMENTS

Revisions:	Date

CONSULTANTS:

Landmark Engineering Group, Inc.
Civil Engineer
2834 104th Street
Urbandale, IA 50322
515.221.1322

Gateway Geotechnical, LLC
Geotechnical Engineer
17736 Edison Avenue
Chesterfield, MO 63005
636.532.7747

SWT Design
Landscape Architect
7722 Big Bend Boulevard
St. Louis, MO 63119
314.644.5700

Hinman Consulting Engineers, Inc
Physical Security
One Bush Street, Suite 510
San Francisco, CA 94104
415.621.4423

The Schachinger Group
Elevator
4255 Stoney Creek Drive
Fort Collins, CO 80525
703.608.2283

SidePlate
Steel Frame
25909 Pala, Ste 200, 92691
Mission Viejo, CA
949.305.7889

ARCHITECT/ENGINEERS:

CANNONDESIGN

© CannonDesign 2014
All rights reserved. No part of this document may be reproduced or utilized in any form, without prior written authorization by The Cannon Corporation.

Drawing Title: **ELECTRICAL SITE PLAN**

Approved: Project Director

Project Title: **John J. Pershing VAMC Clinical & Urgent Care Addition**

Project Number: **657-351**
CANNON DESIGN PROJECT NO. 03850.05

Building Number

Location: **Poplar Bluff, Missouri**

Date: **DEC 14, 2015** | Checked: **TZ** | Drawn: **AW/CK**

Drawing Number: **ES-101**
Dwg. of

Office of Construction and Facilities Management

Department of Veterans Affairs

VA FORM 08-6231

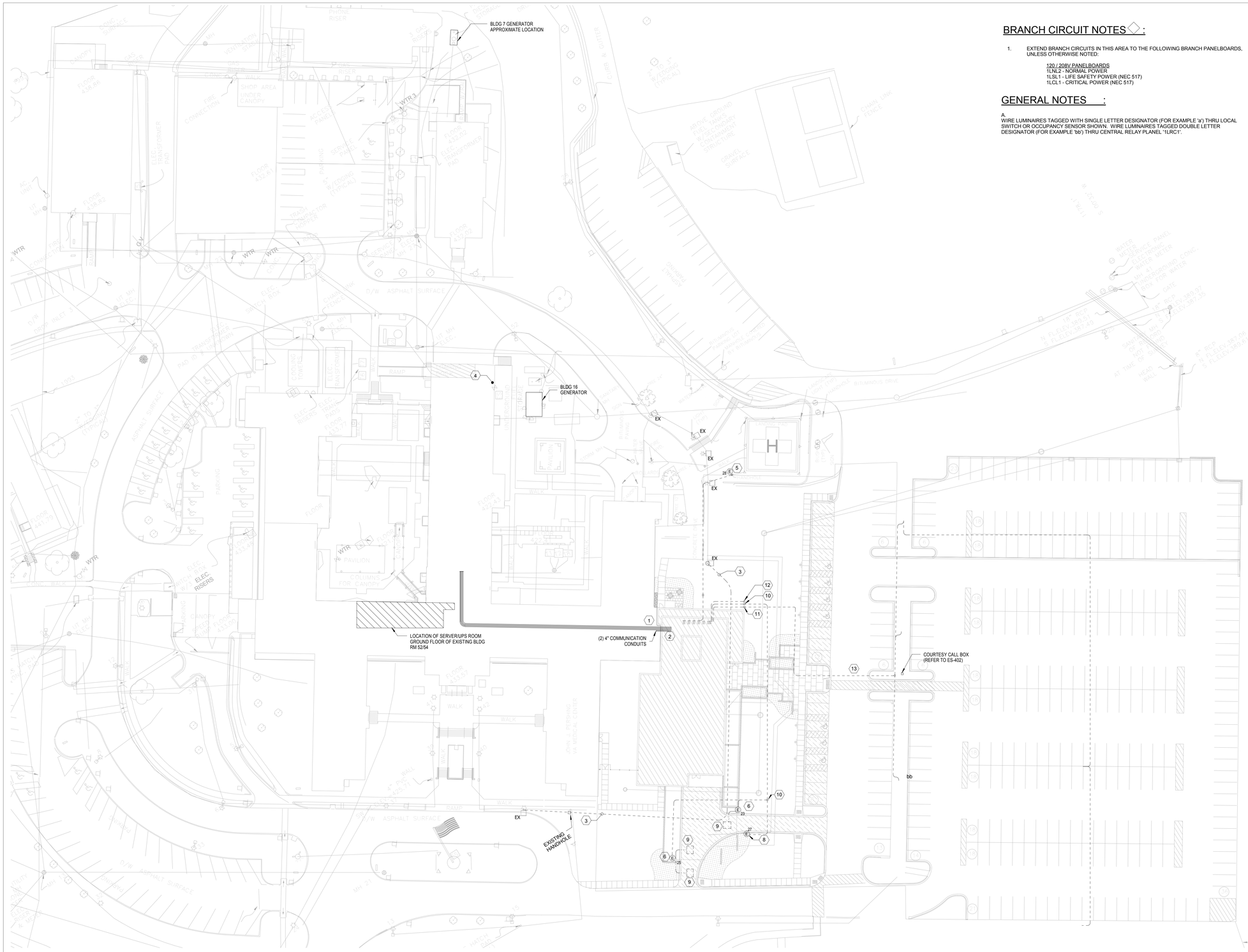

4F ELECTRICAL SITE PLAN
1" = 30'-0"

BRANCH CIRCUIT NOTES ◇ :

1. EXTEND BRANCH CIRCUITS IN THIS AREA TO THE FOLLOWING BRANCH PANELBOARDS, UNLESS OTHERWISE NOTED:

   120 / 208V PANELBOARDS
   1LNL2 - NORMAL POWER
   1LSL1 - LIFE SAFETY POWER (NEC 517)
   1LCL1 - CRITICAL POWER (NEC 517)

GENERAL NOTES :

A.
WIRE LUMINAIRES TAGGED WITH SINGLE LETTER DESIGNATOR (FOR EXAMPLE 'a') THRU LOCAL SWITCH OR OCCUPANCY SENSOR SHOWN. WIRE LUMINAIRES TAGGED DOUBLE LETTER DESIGNATOR (FOR EXAMPLE 'bb') THRU CENTRAL RELAY PLANEL '1LRC1'.

KEYED NOTES ⬡ :

1.
APPROXIMATE ROUTING OF FEEDERS FOR NEW ADDITION APPROACHING EXISTING FOUNDATION WALL IN CRAWL SPACE. (2) 4" COMMUNICATION CONDUITS STUBBED TO CRAWL SPACE SIDE OF FOUNDATION WALL. CORE DRILL EXISTING FOUNDATION AND PROVIDE SEALED CONDUIT PENETRATION FOR EACH CONDUIT. COORDINATE DETAILS OF PENTRETRATION WITH STRUCTURAL DRAWINGS. REFER TO EP-102 FOR PROPOSED ROUTING THROUGH ADDITION. MINIMIZE UNNECESSARY BENDS IN CONDUIT ROUTE.

2.
ROUTE CONDUITS FROM FOUNDATION PENETRATION BENEATH SLAB TO NEW ELECTRICAL ROOM. REFER TO EP-102.

3.
PROVIDE NEW BRANCH CIRCUIT WIRING AND CONDUIT BETWEEN EXISTING HANDHOLE AND EXISTING LUMINIARE SHOWN TO REMAIN. CIRCUIT ORIGINATES FROM PANEL 'BSL' LOCATED IN CRAWL SPACE. REFER TO ES-401 FOR DETAILS. MATCH EXISTING WIRE AND CONDUIT SIZE OF EXISTING CIRCUIT, ASSUME 1-1/2" CONDUIT AND #10 CONDUCTORS (3, 208V/1P CIRCUITS). COORDINATE EXACT ROUTING WITH CIVIL CONTRACTOR.

4.
EXISTING DOMESTIC WATER SERVICE. BOND GROUNDING ELECTRODE SERVING THE ADDITION NEXT TO EXISTING GROUNDING ELECTRODE BOND. REFER TO EP-601 FOR ADDITIONAL INFORMATION.

5.
PROVIDE CIRCUIT TO REFEED EXISTING HELIPAD LIGHTS FROM 1LSL1 CONTROLLED AT MAA. REFER TO 'ENLARGED PLAN - MAA' ON EP-401 FOR ADDITIONAL DETAILS. COORDINATE ROUTING WITH CIVIL ENGINEER.

6.
PROVIDE CONNECTION FOR POWER OPERATED AMBULANCE GATE FROM 1LCL1. COORDINATE EXACT LOCATION AND REQUIREMENTS WITH CIVIL ENGINEER.

7.
NOT USED IF ALTERNATE 3 IS ACCEPTED.

8.
PROVIDE POWER CONNECTION FROM 1LCL1 FOR AMBULANCE GATE INTERCOM. REFER TO ES-402 FOR ADDITIONAL DETAILS.

9.
REFER TO ES-402 FOR LOOP DETECTOR LOCATION AND INSTALLATION.

10.
PROVIDE HANDHOLE FOR CIRCUIT AS SHOWN FED FROM 1LCL1 SERVING MOTOR CONNECTIONS IN AMBULANCE GATE AREA.

11.
PROVIDE HANDHOLE FOR CIRCUITS FED FROM 1LNL2 FOR PARKING LOT LIGHTING AS SHOWN.

12.
PROVIDE HANDHOLE FOR WALKWAY AND AMBULANCE DRIVE LIGHTING CIRCUITS FROM '1LSL1'. CIRCUITS SHALL BE NEATLY COILED AND LABELED WITH CIRCUIT NUMBER IN HANDHOLE FOR EXTENSION TO FUTURE LIGHTING.

13.
RE-FEED EXISTING POLE MOUNTED LUMINAIRES WITH CIRCUIT ROUTING AS SHOWN.

CONSTRUCTION DOCUMENTS - FINAL BID DOCUMENTS

Revisions: | Date

CONSULTANTS:

Landmark Engineering Group, Inc.
Civil Engineer
2834 104th Street
Urbandale, IA 50322
515.221.1322

Gateway Geotechnical, LLC
Geotechnical Engineer
17736 Edison Avenue
Chesterfield, MO 63005
636.532.7747

SWT Design
Landscape Architect
7722 Big Bend Boulevard
St. Louis, MO 63119
314.644.5700

Hinman Consulting Engineers, Inc
Physical Security
One Bush Street, Suite 510
San Francisco, CA 94104
415.621.4423

The Schachinger Group
Elevator
4255 Stoney Creek Drive
Fort Collins, CO 80525
703.608.2263

SidePlate
Steel Frame
25909 Pala, Ste 200, 92691
Mission Viejo, CA
949.305.7889

ARCHITECT/ENGINEERS:

CANNONDESIGN

© CannonDesign 2014
All rights reserved. No part of this document may be reproduced or utilized in any form, without prior written authorization by The Cannon Corporation.

Drawing Title: **ELECTRICAL SITE PLAN - BID ALTERNATE #3**

Approved: Project Director

Project Title: **John J. Pershing VAMC Clinical & Urgent Care Addition**

Location: **Poplar Bluff, Missouri**

Date: **DEC 14, 2015** | Checked: **TZ** | Drawn: **AW**

Project Number: **657-351**
CANNON DESIGN PROJECT NO. 03850.05

Building Number

Drawing Number: **ES-101A**
Dwg. of

Office of Construction and Facilities Management

Department of Veterans Affairs

VA FORM 08-6231

KEYED NOTES ⬡ :

1.
UTILIZE SPARE CONDUITS IN ELECTRICAL TUNNEL FROM BUILDING 20 INTO CRAWL SPACE TO ROUTE NEW FEEDERS TO CRAWL SPACE. UTILIZE CONDUIT SIZE SHOWN ON FEEDER SCHEDULE OR NEXT LARGER SIZE AVAILABLE SPARE THROUGH TUNNEL.

2.
APPROXIMATE FEEDER ROUTING OF NEW FEEDERS TO NEW ADDITION THROUGH CRAWL SPACE. PROVIDE PULL BOXES AS REQUIRED BY NEC.

3.
APPROXIMATE LOCATION OF EXISTING PANEL 'BSL' AND RELAY PANELS FEEDING EXISTING EXTERIOR SITE LIGHTING.

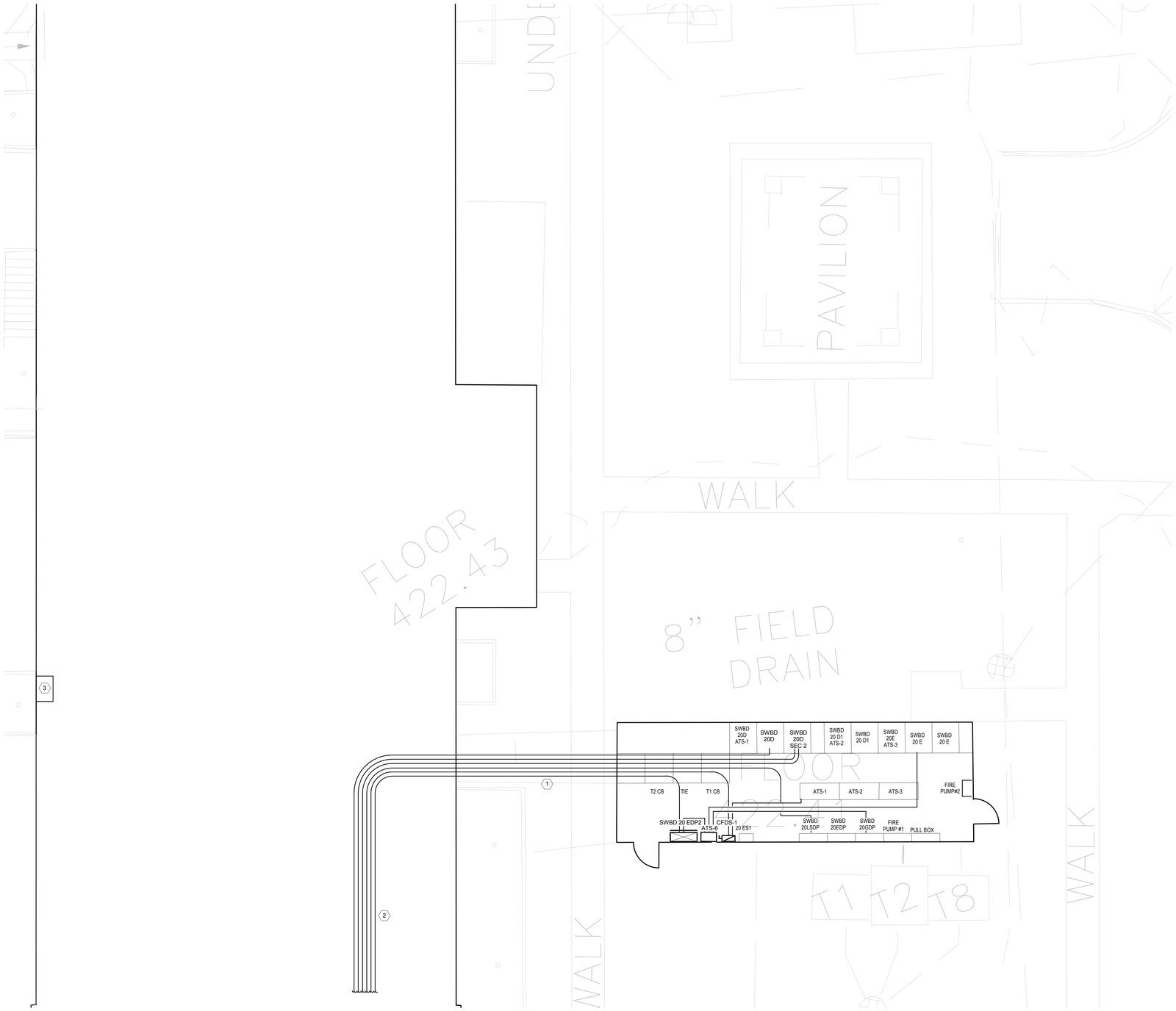

2 ENLARGED PLAN - BUILDING 20 TO CRAWL SPACE
3/16" = 1'-0"

NORTH ARROW

CONSTRUCTION DOCUMENTS - FINAL BID DOCUMENTS

Revisions:	Date

CONSULTANTS:

Landmark Engineering Group, Inc.
Civil Engineer
2834 104th Street
Urbandale, IA 50322
515.221.1322

Gateway Geotechnical, LLC
Geotechnical Engineer
17736 Edison Avenue
Chesterfield, MO 63005
636.532.7747

SWT Design
Landscape Architect
7722 Big Bend Boulevard
St. Louis, MO 63119
314.644.5700

Hinman Consulting Engineers, Inc
Physical Security
One Bush Street, Suite 510
San Francisco, CA 94104
415.621.4423

The Schachinger Group
Elevator
4255 Stoney Creek Drive
Fort Collins, CO 80525
703.608.2263

SidePlate
Steel Frame
25909 Pala, Ste 200, 92691
Mission Viejo, CA
949.305.7889

ARCHITECT/ENGINEERS:

CANNONDESIGN

© CannonDesign 2014
All rights reserved. No part of this document may be reproduced or utilized in any form, without prior written authorization by The Cannon Corporation.

Drawing Title: **SITE ENLARGED PLAN**

Approved: Project Director

Project Title: **John J. Pershing VAMC Clinical & Urgent Care Addition**

Location: **Poplar Bluff, Missouri**

Date: **DEC 14, 2015** | Checked: **TZ** | Drawn: **AW/CK**

Project Number: **657-351**
CANNON DESIGN PROJECT NO. 03850.05

Building Number

Drawing Number: **ES-401**
Dwg. of

Office of Construction and Facilities Management

Department of Veterans Affairs

VA FORM 08-6231

GENERAL NOTES :

1.
REFER TO ES-101 FOR ADDITIONAL INFORMATION.

2.
REFER TO EY-601 FOR ADDITIONAL INFORMATION.

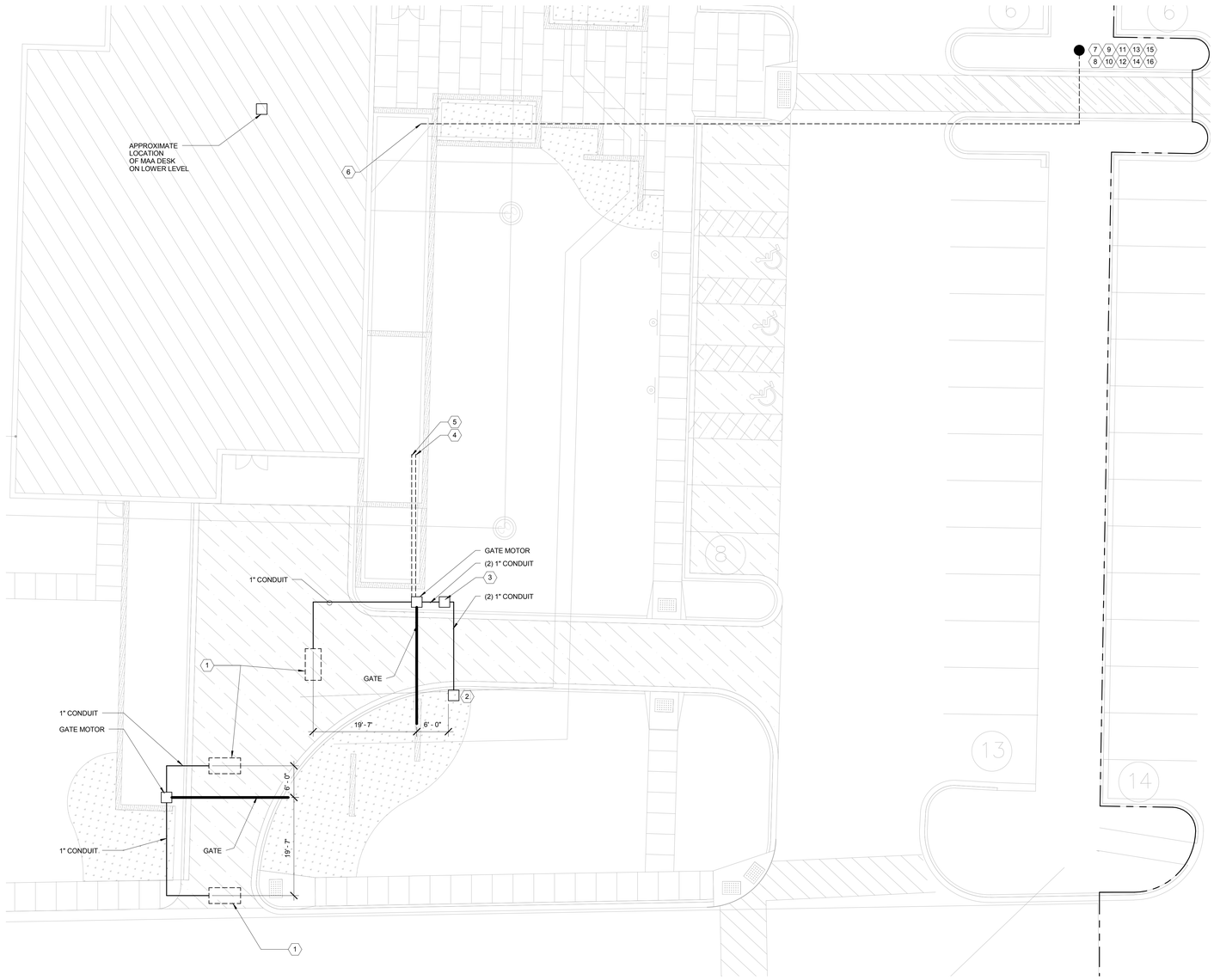

1 TECHNOLOGY SITE PLAN
1" = 10'-0"

KEYED NOTES :

1.
CONTRACTOR SHALL PROVIDE LOOP DETECTOR WITHIN GATE MOTOR (TYPICAL) DIABLO (DSP-6LP) BELOW PAVEMENT. PROVIDE WITH WIRE LOOP 6'X36", 3-LOOP SYSTEM. INSTALL IN PVC PIPE. COORDINATE WITH CIVIL ENGINEER.

2.
CONTRACTOR SHALL PROVIDE STANDARD GOOSENECK ACCESS CONTROL MOUNTING POST (DOORKING) INSTALLED ON A CONCRETE FOUNDATION 12" SQUARED BY 24" DEEP. ALONG WITH AIPHONE INTERCOM (JK-DV) MOUNTED ON THE POST. PROVIDE WITH A HEAVY METAL, POWER COATED WATERPROOF ENCLOSURE. CONTRACTOR SHALL PROVIDE 1" CONDUIT UNDERGROUND TO MAA DESK ON LOWER LEVEL. CONTRACTOR SHALL PROVIDE AIPHONE MASTER STATION (JMS-4AEDV) AT MAA DESK ON LOWER LEVEL.

3.
6"X6"X4" JUNCTION BOX MOUNTED NEXT TO GATE MOTOR ON PAD FOR INTERCOM CALL STATION.

4.
CONTRACTOR SHALL PROVIDE (2) 3/4" CONDUIT TO ROUTE (1) CATEGORY 6 CABLE AND (1) STP 2 CONDUCTOR 18AWG SPEAKER CABLE BACK TO INTERCOM MASTER STATION LOCATED AT THE MAA DESK. CONTRACTOR SHALL ROUTE THE SPEAKER CABLE AND THE CATEGORY 6 CABLE IN SEPARATE CONDUIT.

5.
CONTRACTOR SHALL PROVIDE (1) 3/4" CONDUIT TO ROUTE CABLE FOR DRY CONTACT FOR RELAY MODULE BACK TO INTERCOM MASTER STATION LOCATED AT THE MAA DESK.

6.
CONTRACTOR SHALL PROVIDE (2) 3/4" CONDUIT UNDERGROUND BACK TO THE BUILDING. REFER TO ELECTRICAL DRAWINGS FOR ADDITIONAL DETAILS.

7.
THE CONTRACTOR SHALL INSTALL A CODE BLUE CB 9-S PEDESTAL INTERACTIVE TWO WAY VOICE COMMUNICATION UNIT FOR PATRON ASSISTANCE IN THE PARKING AREA.

8.
THE PEDESTAL SHALL BE GLOSS WHITE IN OVER ALL COLOR WITH RED GRAPHICS DOWN TWO SIDES. THE GRAPHICS SHALL READ "ASSISTANCE".

9.
THE STANDARD FACE PLATE 1 SHALL BE INSTALLED WITH A SINGLE RED "PUSH FOR HELP" BUTTON ON THE FACEPLATE.

10
THE UNIT IS 60 INCHES TALL BY 12 INCHES ROUND.

11.
THE UNIT WILL REQUIRE AN 18 INCH ROUND CONCRETE BASE THAT IS 24 INCHES DEEP. ANCHOR THE PEDESTAL TO THE BASE.

12.
ONE (1) 3/4 INCH CONDUITS SHALL BE ROUTED BACK TO THE BUILDING. ONE (1) CONDUIT SHALL BE ROUTED TO THE CLOSEST IT CLOSET WITH TELEPHONE CONNECTIVITY IS AVAILABLE TO THE HOSPITAL PHONE SWITCH. THE JUNCTION BOX FOR THE SINGLE CONDUIT SHALL BE IN THE BASE OF THE PEDESTAL.

13.
A 120V TO 24V AC STEP DOWN TRANSFORMER SHALL BE ORDERED WITH THE CB 9-S UNIT.

14
THE TELEPHONE CABLE (FOR TWO WAY COMMUNICATION) SHALL BE CROSS CONNECTED IN THE IT CLOSET AND THE TELEPHONE SWITCH TO "RING DOWN" FROM THE CODE BLUE PEDESTAL TO ONE OF THE MAA TELEPHONE LINES.

15.
MOUNT THE FACEPLATE FACING THE WALKWAY THAT LEADS FROM THE PARKING SPACES TO THE HOSPITAL

16.
COORDINATE WITH IT AND MAA FOR TESTING AND ACCEPTANCE OF THE SYSTEM FUNCTIONALITY.

SEQUENCE OF OPERATION FOR GATE CONTROLS:

AMBULANCE PULLS UP TO THE ACCESS CONTROL MOUNTING POST. PRESS THE INTERCOM BUTTON WHICH WILL RING AT THE MAA DESK. BETWEEN THE MAA DESK AND THE ACCESS CONTROL MOUNT POST THEIR WILL BE A 2-WAY COMMUNICATION SYSTEM THAT WILL HAVE A CAMERA ALONG WITH VOICE COMMUNICATION BETWEEN THE AIPHONE INTERCOM SUB-STATION AND THE MASTER STATION. UPON CONFIRMATION THE GATES WILL GO UP AND THE AMBULANCE WILL ENTER. THE GATE WILL REMAIN OPEN UNTIL THE FRONT AXLE OF THE AMBULANCE IS DETECTED THEN THE GATE WILL CLOSE BEHIND THE AMBULANCE. TO EXIT THE FACILITY THE AMBULANCE FRONT AXLE WILL SENSOR THE LOOP DETECTOR SYSTEM AND THE GATE WILL OPEN. ONCE THE AMBULANCE PULLS OUT AND THE LOOP DETECTOR SENSES THE FRONT AXLE OF THE AMBULANCE THE GATE WILL COME DOWN.

CONSTRUCTION DOCUMENTS - FINAL BID DOCUMENTS

Revisions: | Date

CONSULTANTS:

Landmark Engineering Group, Inc.
Civil Engineer
2834 104th Street
Urbandale, IA 50322
515.221.1322

SidePlate
Steel Frame
25909 Pala, Ste 200, 92691
Mission Viejo, CA
949.305.7889

Gateway Geotechnical, LLC
Geotechnical Engineer
17736 Edison Avenue
Chesterfield, MO 63005
636.532.7747

SWT Design
Landscape Architect
7722 Big Bend Boulevard
St. Louis, MO 63119
314.644.5700

Hinman Consulting Engineers, Inc
Physical Security
One Bush Street, Suite 510
San Francisco, CA 94104
415.621.4423

The Schachinger Group
Elevator
4255 Stoney Creek Drive
Fort Collins, CO 80525
703.608.2263

ARCHITECT/ENGINEERS:

CANNONDESIGN

© CannonDesign 2014
All rights reserved. No part of this document may be reproduced or utilized in any form, without prior written authorization by The Cannon Corporation.

Drawing Title: **TECHNOLOGY SITE ENLARGED PLAN**

Approved: Project Director

Project Title: **John J. Pershing VAMC Clinical & Urgent Care Addition**

Location: **Poplar Bluff, Missouri**

Date: **DEC 14, 2015** | Checked: **RR** | Drawn: **Author**

Project Number: **657-351**
CANNON DESIGN PROJECT NO. 03850.05

Building Number

Drawing Number: **ES-402**
Dwg. of

Office of Construction and Facilities Management

Department of Veterans Affairs

VA FORM 08-6231

GENERAL SHEET NOTES :

1.
ALL INFORMATION OUTLETS ON THIS SHEET ARE SERVED FROM TELE/DATA ROOM 1203. REFER TO 3F/EY-103 FOR ROOM LOCATION.

2.
CONTRACTOR SHALL INSTALL J-HOOKS EVERY 5 FEET.

3.
PROVIDE 4" EZ PATH SLEEVES FOR PENETRATION THROUGH WALLS.

KEYED NOTES ⬡ :

1.
VANDAL PROOF DOME CAMERA WIDE ANGLE VIEW.

2.
42" LCD MONITOR MOUNT ON WALL 5'-0" A.F.F. FROM BOTTOM FOR SECURITY CAMERAS. (2) DATA OUTLETS SHALL BE MOUNTED 5'-0" A.F.F. BEHIND THE MONITORS.

3.
(2) 4" FLOOR SLEEVE FIRE RATED SYSTEM TO IT ROOM ON LEVEL ONE. REFER TO DETAIL 8 ON EP-401 FOR ROOM LOCATION.

4.
CONTRACTOR SHALL COORDINATE DOOR CONTACT INSTALLATION WITH DOOR MANUFACTURER PRIOR TO INSTALLATION.

5.
TV LOCATION.

6.
NOT USED.

7.
COORDINATE DEVICE LOCATION WITH ARCHITECTURAL COMPONENTS.

8.
MOUNT DATA OUTLET AND CAMERA 8' - 0" AFF.

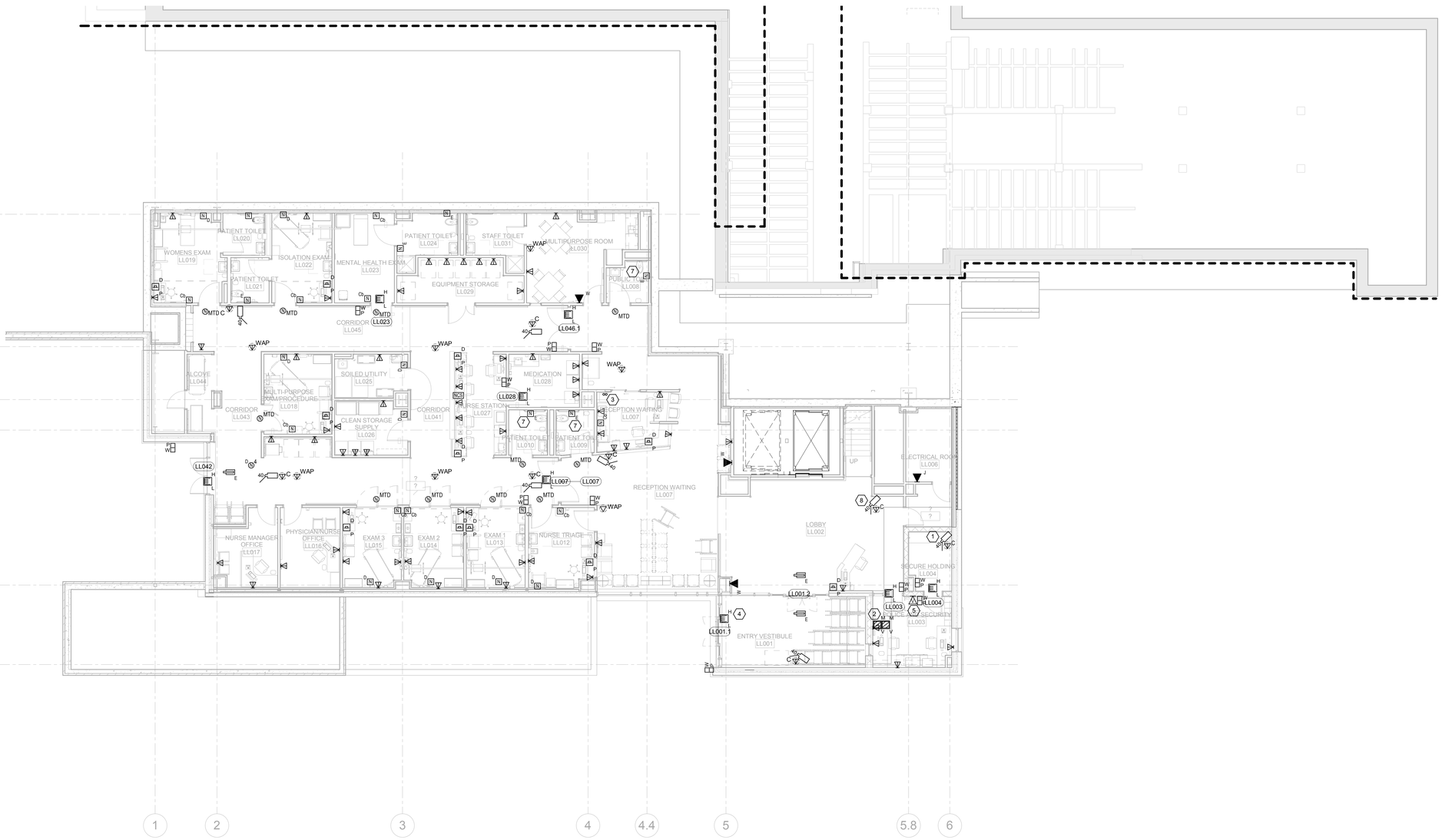

3F LOWER LEVEL SYSTEMS PLAN
1/8" = 1'-0"

NORTH ARROW

CONSTRUCTION DOCUMENTS - FINAL BID DOCUMENTS

Revisions:		Date
1	Addendum_04	10.08.15

CONSULTANTS:

Landmark Engineering Group, Inc.
Civil Engineer
2834 104th Street
Urbandale, IA 50322
515.221.1322

Gateway Geotechnical, LLC
Geotechnical Engineer
17736 Edison Avenue
Chesterfield, MO 63005
636.532.7747

SWT Design
Landscape Architect
7722 Big Bend Boulevard
St. Louis, MO 63119
314.644.5700

Hinman Consulting Engineers, Inc
Physical Security
One Bush Street, Suite 510
San Francisco, CA 94104
415.621.4423

The Schachinger Group
Elevator
4255 Stoney Creek Drive
Fort Collins, CO 80525
703.608.2263

SidePlate
Steel Frame
25909 Pala, Ste 200, 92691
Mission Viejo, CA
949.305.7889

ARCHITECT/ENGINEERS:

CANNONDESIGN

© CannonDesign 2014
All rights reserved. No part of this document may be reproduced or utilized in any form, without prior written authorization by The Cannon Corporation.

Drawing Title: **LOWER LEVEL SYSTEMS PLAN**

Approved: Project Director

Project Title: **John J. Pershing VAMC Clinical & Urgent Care Addition**

Location: **Poplar Bluff, Missouri**

Date: **DEC 14, 2015** | Checked: **TZ** | Drawn: **AW/CK**

Project Number: **657-351**
CANNON DESIGN PROJECT NO. 03850.05

Building Number

Drawing Number: **EY-101**
Dwg. of

Office of Construction and Facilities Management

Department of Veterans Affairs

VA FORM 08-6231

GENERAL SHEET NOTES :

1.
ALL INFORMATION OUTLETS ON THIS SHEET ARE SERVED FROM TELE/DATA ROOM 1203. REFER TO 3F/EY-103 FOR ROOM LOCATION.

2.
CONTRACTOR SHALL INSTALL J-HOOKS EVERY 5 FEET.

3.
PROVIDE 4" EZ PATH SLEEVES FOR PENETRATION THROUGH WALLS.

KEYED NOTES ⬡ :

1.
(2) 4" FLOOR SLEEVE FIRE RATED SYSTEM TO IT ROOM ON LEVEL ONE. REFER TO DETAIL 8 ON EP-401 FOR ROOM LOCATION. CONDUITS ARE ABOVE GROUND LEVEL SUSPENDED CEILING.

2.
(2) 4" FLOOR SLEEVE FIRE RATED SYSTEM TO BIO-MED ROOM ON LEVEL ONE. REFER TO DETAIL 8 ON EP-401 FOR ROOM LOCATION. CONDUITS ARE ABOVE GROUND LEVEL SUSPENDED CEILING.

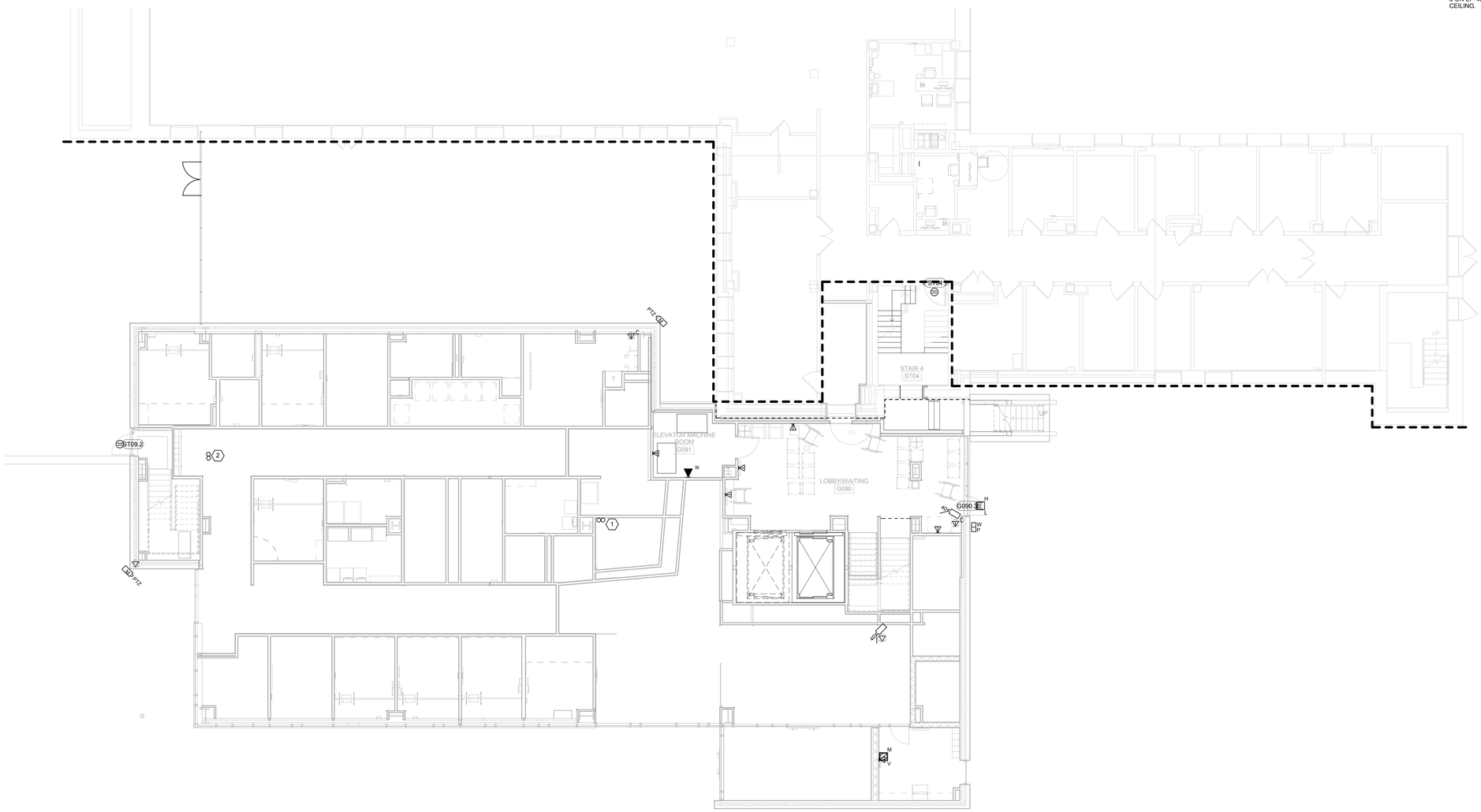

3F GROUND LEVEL SYSTEMS PLAN
1/8" = 1'-0"

NORTH ARROW

CONSTRUCTION DOCUMENTS - FINAL BID DOCUMENTS

Revisions:	Date

CONSULTANTS:

Landmark Engineering Group, Inc.
Civil Engineer
2834 104th Street
Urbandale, IA 50322
515.221.1322

Gateway Geotechnical, LLC
Geotechnical Engineer
17736 Edison Avenue
Chesterfield, MO 63005
636.532.7747

SWT Design
Landscape Architect
7722 Big Bend Boulevard
St. Louis, MO 63119
314.644.5700

Hinman Consulting Engineers, Inc
Physical Security
One Bush Street, Suite 510
San Francisco, CA 94104
415.621.4423

The Schachinger Group
Elevator
4255 Stoney Creek Drive
Fort Collins, CO 80525
703.608.2263

SidePlate
Steel Frame
25909 Pala, Ste 200, 92691
Mission Viejo, CA
949.305.7889

ARCHITECT/ENGINEERS:

CANNONDESIGN

© CannonDesign 2014
All rights reserved. No part of this document may be reproduced or utilized in any form, without prior written authorization by The Cannon Corporation.

Drawing Title: **GROUND LEVEL SYSTEMS PLAN**

Approved: Project Director

Project Title: **John J. Pershing VAMC Clinical & Urgent Care Addition**

Location: **Poplar Bluff, Missouri**

Date: **DEC 14, 2015** | Checked: **TZ** | Drawn: **AW/CK**

Project Number: **657-351**
CANNON DESIGN PROJECT NO. 03850.05

Building Number

Drawing Number: **EY-102**
Dwg. of

Office of Construction and Facilities Management

Department of Veterans Affairs

VA FORM 08-6231

GENERAL SHEET NOTES :

1.
ALL INFORMATION OUTLETS ON THIS SHEET ARE SERVED FROM TELE/DATA ROOM 1203.

2.
ALL OF THE NURSE CALL DEVICE CABLES SHALL BE HOME RUN TO ROOM 0081-1-PB (WHICH IS LOCATED NEAR THE CREDIT UNION, JUST PAST THE ELEVATORS. TERMINATE THE CABLES INTO THE EXISTING RESPONDER 5 NURSE CALL PANELS IN ROOM 0081-1-PB WHICH ARE MOUNTED ON THE WALL. IF ADDITIONAL PANELS ARE REQUIRED THE CONTRACTOR SHALL PURCHASE AND INSTALL ADDITIONAL NURSE CALL PANELS TO ACCOMMODATE THE NEW NURSE CALL DEVICE CABLES AS LISTED ON THE DRAWINGS AND SPECIFICATIONS. THE NEW RESPONDER 5 FILE SERVER SHALL BE MOUNTED IN THE EXISTING RACK IN ROOM 0081-1-PB AND CONNECTED TO THE EXISTING RESPONDER 5 NURSE CALL SYSTEM.

3.
CONTRACTOR SHALL INSTALL J-HOOKS EVERY 5 FEET.

4.
PROVIDE 4" EZ PATH SLEEVES FOR PENETRATION THROUGH WALLS.

KEYED NOTES ⬡ :

1.
IN CEILING DATA CONNECTION FOR CEILING MOUNTED MICROSCOPE.

2.
KIOSK LOCATION.

3.
TV LOCATION TYPICAL.

4.
(2) TWO 55" SMART BOARD LOCATION (SMART TECHNOLOGIES 8055i). COORDINATE EXACT MOUNTING LOCATION WITH ARCHITECT AND OWNER PRIOR TO ROUGH-IN. CONTRACTOR SHALL ROUGH-IN 4-11/16" SQUARE BACK-BOX WITH DOUBLE GANG PLASTER RING. PROVIDE WITH EXTRON FACEPLATE THAT HAS AN HDMI AND A USB CONNECTOR AND CABLE TO THE FLOORBOX UNDER THE TABLE. SEE DETAILS 6D AND 7B ON SHEET EY-601.

5.
CONTRACTOR SHALL PROVIDE AV AND DATA/VOICE CONNECTORS AND CABLE TO WALL PLATE AND PROJECTOR AS SHOWN ON DETAILS 4 AND 5 ON SHEET EY-601 WITHIN FLOORBOX.

6.
PROJECTION SCREEN WALL MOUNTED, MANUALLY OPERATED. HD PROGRESSIVE 0.6, SEAMLESS, FLAME RETARDANT, MILDEW RESISTANT 50"(H) x 80"(W), 94" DIAGONAL 16:10 ASPECT RATIO (DALITE ADVANTAGE MANUAL)

7.
CONTRACTOR SHALL TERMINATE SERVICES FOR DENTAL CHAIR IN FLOORBOX. COORDINATE PLACEMENT AND REQUIREMENTS OF FLOORBOX WITH DENTAL EQUIPMENT PROVIDER.

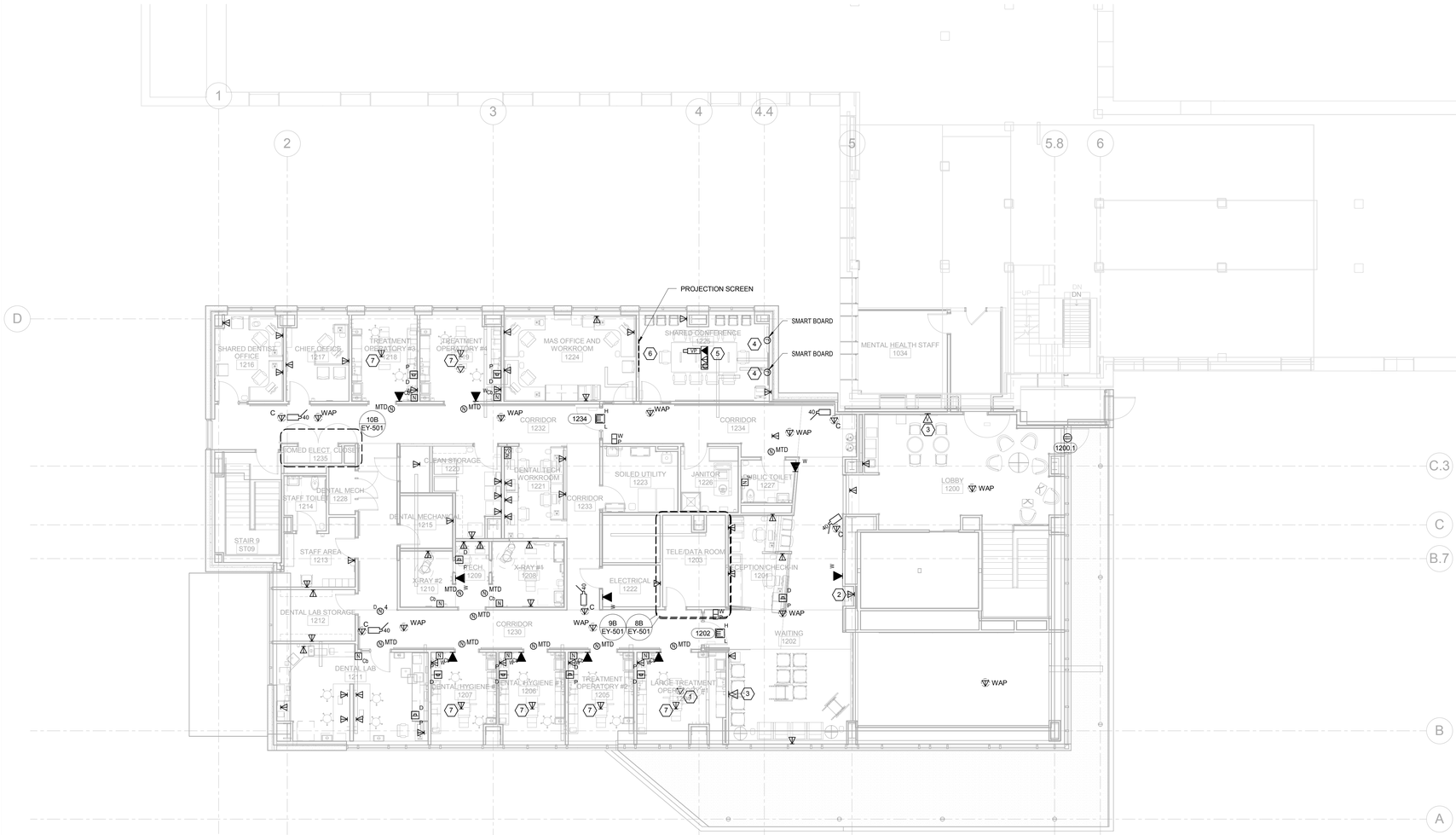

3F LEVEL ONE SYSTEMS PLAN
1/8" = 1'-0"

NORTH ARROW

CONSTRUCTION DOCUMENTS - FINAL BID DOCUMENTS

Revisions:	Date

CONSULTANTS:

Landmark Engineering Group, Inc.
Civil Engineer
2834 104th Street
Urbandale, IA 50322
515.221.1322

SidePlate
Steel Frame
25909 Pala, Ste 200, 92691
Mission Viejo, CA
949.305.7889

Gateway Geotechnical, LLC
Geotechnical Engineer
17736 Edison Avenue
Chesterfield, MO 63005
636.532.7747

SWT Design
Landscape Architect
7722 Big Bend Boulevard
St. Louis, MO 63119
314.644.5700

Hinman Consulting Engineers, Inc
Physical Security
One Bush Street, Suite 510
San Francisco, CA 94104
415.621.4423

The Schachinger Group
Elevator
4255 Stoney Creek Drive
Fort Collins, CO 80525
703.608.2263

ARCHITECT/ENGINEERS:

CANNONDESIGN

© CannonDesign 2014
All rights reserved. No part of this document may be reproduced or utilized in any form, without prior written authorization by The Cannon Corporation.

Drawing Title: **LEVEL 01 SYSTEMS PLAN**

Approved: Project Director

Project Title: **John J. Pershing VAMC Clinical & Urgent Care Addition**

Location: **Poplar Bluff, Missouri**

Date: **DEC 14, 2015** | Checked: **TZ** | Drawn: **AW/CK**

Project Number: **657-351**
CANNON DESIGN PROJECT NO. 038650.05

Building Number

Drawing Number: **EY-103**
Dwg. of

Office of Construction and Facilities Management

Department of Veterans Affairs

VA FORM 08-6231

GENERAL SHEET NOTES :

1.
ALL INFORMATION OUTLETS ON THIS SHEET ARE SERVED FROM TELE/DATA ROOM 1203.

2.
ALL OF THE NURSE CALL DEVICE CABLES SHALL BE HOME RUN TO ROOM 0081-1-PB (WHICH IS LOCATED NEAR THE CREDIT UNION, JUST PAST THE ELEVATORS. TERMINATE THE CABLES INTO THE EXISTING RESPONDER 5 NURSE CALL PANELS IN ROOM 0081-1-PB WHICH ARE MOUNTED ON THE WALL. IF ADDITIONAL PANELS ARE REQUIRED THE CONTRACTOR SHALL PURCHASE AND INSTALL ADDITIONAL NURSE CALL PANELS TO ACCOMMODATE THE NEW NURSE CALL DEVICE CABLES AS LISTED ON THE DRAWINGS AND SPECIFICATIONS. THE NEW RESPONDER 5 FILE SERVER SHALL BE MOUNTED IN THE EXISTING RACK IN ROOM 0081-1-PB AND CONNECTED TO THE EXISTING RESPONDER 5 NURSE CALL SYSTEM.

3.
CONTRACTOR SHALL INSTALL J-HOOKS EVERY 5 FEET.

4.
PROVIDE 4" EZ PATH SLEEVES FOR PENETRATION THROUGH WALLS.

KEYED NOTES ⬡ :

1.
KIOSK LOCATION.

2.
TV LOCATION TYPICAL.

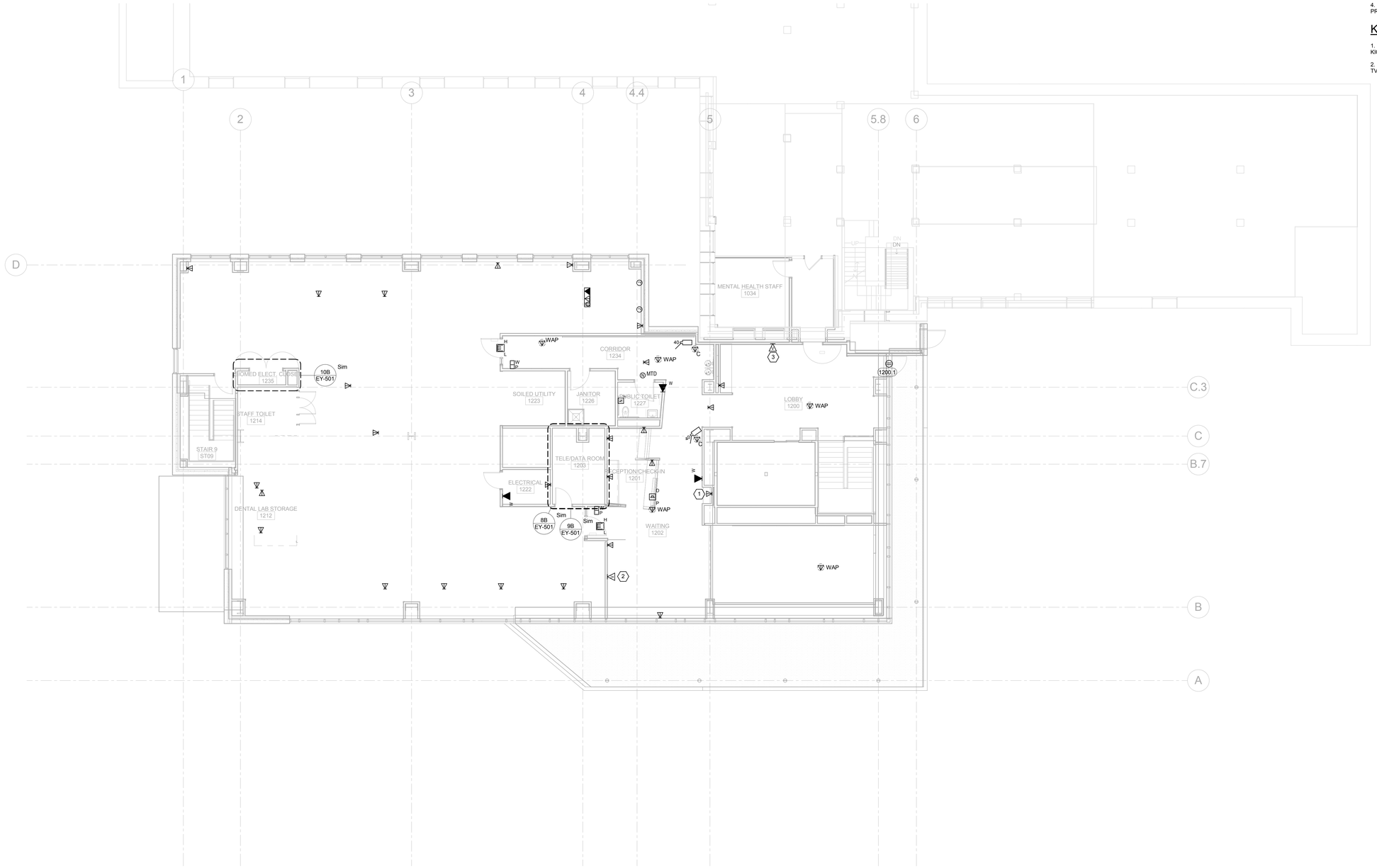

CONSTRUCTION DOCUMENTS - FINAL BID DOCUMENTS

Revisions:	Date

CONSULTANTS:

Landmark Engineering Group, Inc.
Civil Engineer
2834 104th Street
Urbandale, IA 50322
515.221.1322

Gateway Geotechnical, LLC
Geotechnical Engineer
17736 Edison Avenue
Chesterfield, MO 63005
636.532.7747

SWT Design
Landscape Architect
7722 Big Bend Boulevard
St. Louis, MO 63119
314.644.5700

Hinman Consulting Engineers, Inc
Physical Security
One Bush Street, Suite 510
San Francisco, CA 94104
415.621.4423

The Schachinger Group
Elevator
4255 Stoney Creek Drive
Fort Collins, CO 80525
703.608.2283

SidePlate
Steel Frame
25909 Pala, Ste 200, 92691
Mission Viejo, CA
949.305.7889

ARCHITECT/ENGINEERS:

CANNONDESIGN

© CannonDesign 2014
All rights reserved. No part of this document may be reproduced or utilized in any form, without prior written authorization by The Cannon Corporation.

Drawing Title
LEVEL 01 SYSTEMS PLAN - BID ALTERNATE 1

Approved: Project Director

Project Title
John J. Pershing VAMC Clinical & Urgent Care Addition

Location
Poplar Bluff, Missouri

Date **DEC 14, 2015** | Checked **TZ** | Drawn **AW**

Project Number
657-351
CANNON DESIGN PROJECT NO. 03850.05

Building Number

Drawing Number
EY-103A
Dwg. of

Office of Construction and Facilities Management

Department of Veterans Affairs

VA FORM 08-6231

KEYED NOTES :

1. 19" OPEN RELAY RACK WITH 4" VERTICAL CABLE MANAGEMENT ON BOTH SIDES OF RACK.
2. 3/4" FIRE RATED PLYWOOD FROM FLOOR TO 8'-0".
3. (2) 4" FIRE RATED ASSEMBLIES TO FLOOR BELOW.
4. RACK MOUNT UPS.
5. (2) 4" FIRE RATED ASSEMBLIES OVER DOOR INTO ROOM.
6. RACK MOUNTED FIBER OPTIC PANEL WITH LC CONNECTORS.

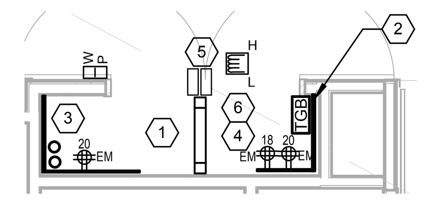

10B ENLARGED PLAN - BIOMED CLOSET
1/4" = 1'-0"

KEYED NOTES :

1. 3/4" FIRE RATED PLYWOOD. TYPICAL OF 3 WALLS.
2. 4" FLOOR SLEEVE FIRE RATED SYSTEMS TO LOWER LEVEL
3. UNISTRUT WITH 1/4" THREATED ROD EVERY 5'-0" TO SUPPORT CABLE TRAY.
4. CABLE TRAY 12" MOUNTED 8'-0" A.F.F. BEHIND 19" RELAY RACKS.
5. (2) 4" FIRE RATED SLEEVE THROUGH WALL @ 8'-8" A.F.F. LINED UP OVER CABLE TRAY. REFER TO 4/EY-502 FOR ADDITIONAL INFORMATION.
6. WALL BRACKET FOR CABLE TRAY.
7. WALL MOUNTED VOICE 110 BLOCKS.
8. WALL SUPPORT OF CABLE TRAY (TYPICAL OF 2).

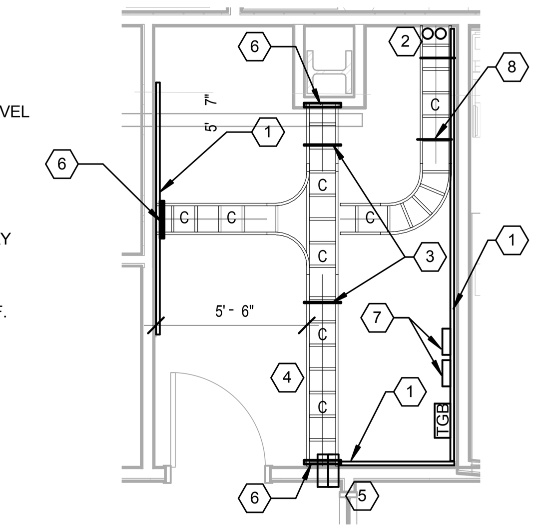

9B ENLARGED PLAN - IT ROOM PATHWAY 1203
1/4" = 1'-0"

KEYED NOTES :

1. 3/4" FIRE RATED PLYWOOD. TYPICAL OF 3 WALLS.
2. 4" FLOOR SLEEVE FIRE RATED SYSTEMS TO LOWER LEVEL
3. UNISTRUT WITH 1/4" THREATED ROD EVERY 5'-0" TO SUPPORT CABLE TRAY.
4. CABLE TRAY 12" MOUNTED 8'-0" A.F.F. BEHIND 19" RELAY RACKS.
5. (2) 4" FIRE RATED SLEEVE THROUGH WALL @ 8'-8" A.F.F. LINED UP OVER CABLE TRAY. REFER TO 4/EY-502 FOR ADDITIONAL INFORMATION.
6. WALL BRACKET FOR CABLE TRAY.
7. WALL MOUNTED VOICE 110 BLOCKS.
8. WALL SUPPORT OF CABLE TRAY (TYPICAL OF 2).

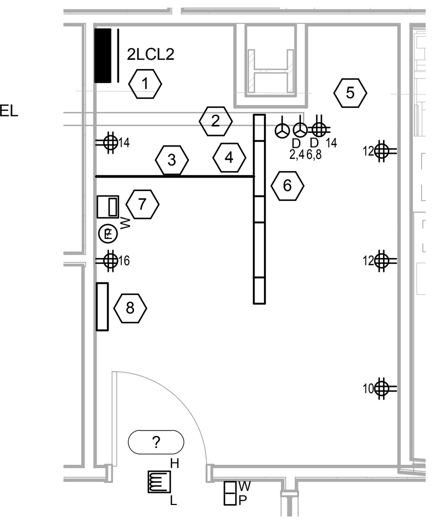

8B ENLARGED PLAN - IT ROOM 1203
1/4" = 1'-0"

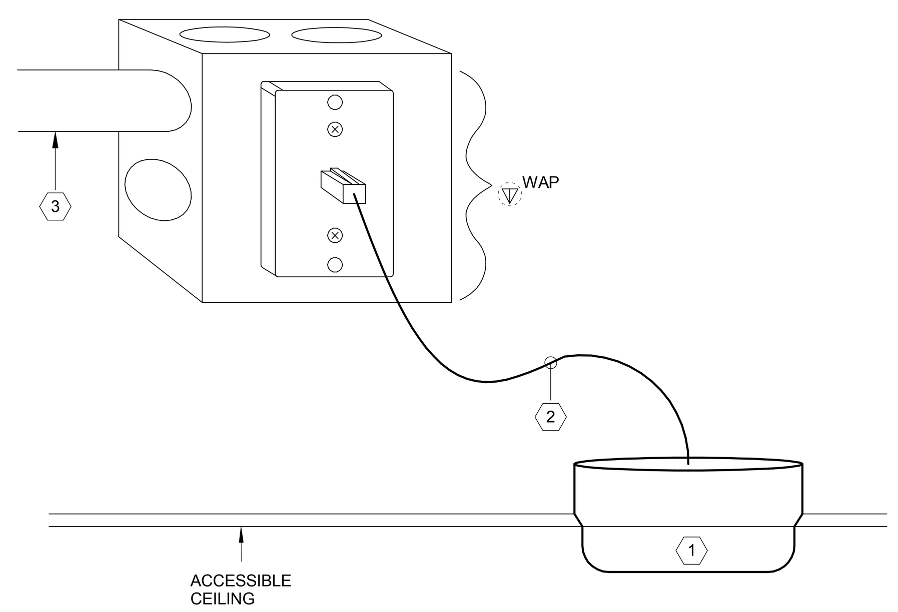

KEYED NOTES :

1. CEILING MOUNTED WIRELESS ACCESS POINT. SECURE TO CEILING AND TILE SUPPORT BRACKET.
2. UTP PATCH CABLE.
3. ROUTE CABLING IN J-HOOKS IN OPEN ACCESSIBLE CEILINGS OR IN EMT CONDUIT IN INACCESSIBLE AREAS.

1D INTERIOR WIRELESS ACCESS POINT (WAP) CEILING MOUNTED
NTS

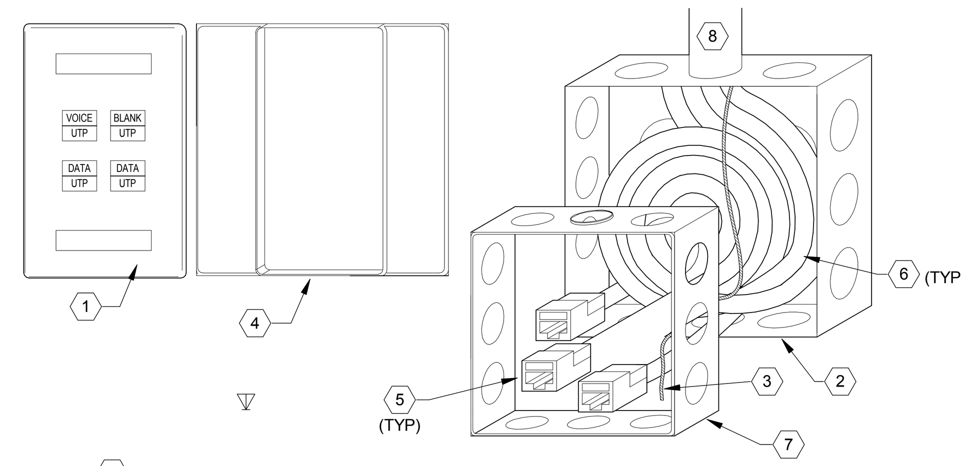

KEYED NOTES :

1. 4 PORT, SINGLE GANG COVERPLATE WITH LABELS AND MOUNTING HARDWARE. PROVIDE BLANK INSERTS FOR ALL UNUSED PORTS.
2. 4-11/16" X 4-11/16" SQUARE OUTLET BOX, WITH SINGLE GANG ADAPTER RING.
3. NYLON PULL CORD TO FAR END CONDUIT TERMINATION POINT.
4. SINGLE GANG ADAPTER.
5. MODULAR JACK 110 TO (3) RJ45 WITH ICONS, UNIVERSAL WIRING PATTERN, NON KEYED, EIGHT POSITION (4 PAIR).
6. (3) TWISTED PAIR TYPE 4 PAIR, HORIZONTAL CABLE, FROM LOCAL TELECOMMUNICATIONS ROOM, WITH 6" SERVICE LOOP.
7. 4-11/16" X 4-11/16" X 1-1/2" DEEP SQUARE OUTLET BOX EXTENSION RING.
8. CONDUIT STUB TO ACCESSIBLE CEILING SPACE.
9. COORDINATE WITH SPECIFIC BACKBOX DEVICE SYMBOLS AS SHOWN ON DRAWINGS TO DETERMINE ROUGH-IN REQUIREMENTS AND LOCATIONS.

3D TELECOMMUNICATIONS OUTLET
NTS

CONDUIT CAPACITY CHART FOR TELECOMMUNICATIONS									
CONDUIT		CABLE OUTSIDE DIAMETER in (mm) / CABLE TYPE *							
INSIDE DIAMETER (mm)	TRADE SIZE	.13 (3.3)	.18 (4.6)	.22 (5.6)	.24 (6.1) CAT 5e CAT 6	.29 (7.4) CAT 6+ CAT 6e	.31 (7.9) CAT 6A STP	.37 (9.4)	.53 (13.5)
21	3/4	6	5	4	3	2	2	1	0
27	1	8	8	7	6	3	3	2	1
35	1-1/4	16	14	12	10	6	4	3	1
41	1-1/2	20	18	16	15	7	6	4	2
53	2	30	26	22	20	14	12	7	4
63	2-1/2	45	40	36	30	17	14	12	6
78	3	70	60	50	40	20	20	17	7
91	3-1/2	-	-	-	-	-	-	22	12
103	4	-	-	-	-	-	-	30	14

NOTES:

* CABLE TYPE SHOWN IS FOR TYPICAL CABLES AND VARIES FROM MANUFACTURER. VERIFY CABLE OUTSIDE DIAMETER OF ACTUAL MANUFACTURER UTILIZED PRIOR TO ROUGH-IN.

UTILIZE ACTUAL FILL RATES PER NEC IF CABLES OF MULTIPLE DIAMETERS ARE UTILIZED IN A SINGLE CONDUIT.

5D CONDUIT CAPACITY CHART

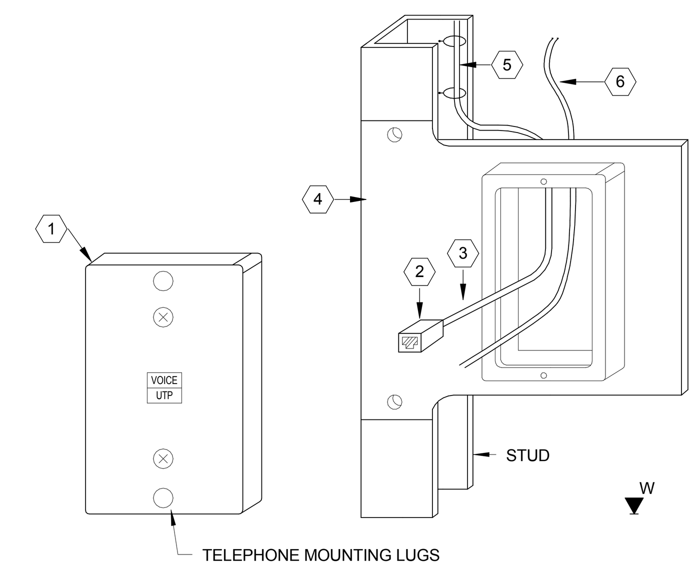

KEYED NOTES :

1. SINGLE GANG STAINLESS STEEL COVERPLATE WITH TELEPHONE WALL-MOUNTING LUGS. VERIFY COMPATIBILITY WITH TELEPHONE MANUFACTURER PRIOR TO PURCHASE.
2. MODULAR JACK, 110 TO RJ45, UNIVERSAL WIRING PATTERN NON EYED, EIGHT POSITION (4 PAIR).
3. TWISTED PAIR TYPE 4 PAIR, HORIZONTAL CABLE TO LOCAL TELECOMMUNICATIONS ROOM.
4. SINGLE GANG LOW VOLTAGE MOUNTING BRACKET SECURED TO STUD.
5. BUNDLE DEVICE CABLING.
6. NYLON PULL CORD FOR FUTURE CABLE INSTALLATION. SECURE AT TOP OF WALL CAVITY.
7. COORDINATE WITH SPECIFIC BACKBOX DEVICE SYMBOLS AS SHOWN ON DRAWINGS TO DETERMINE ROUGH-IN REQUIREMENTS AND LOCATIONS.

7D TELEPHONE OUTLET 'T' 7
NTS

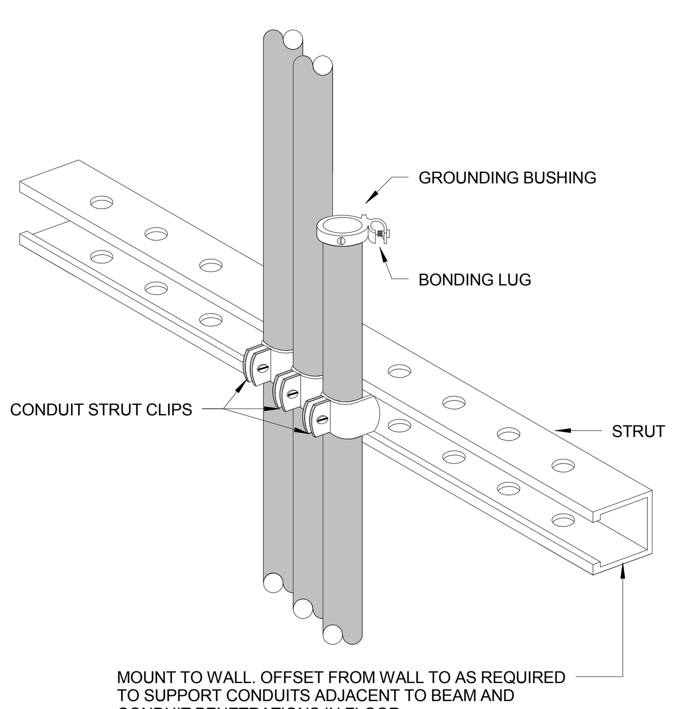

1F CONDUIT ROUGH-IN SUPPORT
NTS

MINIMUM SIZE BONDING CONDUCTOR FOR TELECOMMUNICATIONS		
CONDUCTOR LENGTH (FEET)	CONDUCTOR SIZE (AWG)	MAXIMUM AREA (CIRCULAR MILS)
13	6	26,240
21	4	41,740
26	3	52,620
33	2	66,360
42	1	83,690
53	1/0	105,600
67	2/0	133,100
84	3/0	167,800
106	4/0	211,600
125	250	250,000
150	300	300,000
175	350	350,000
200	400	400,000
250	500	500,000
300	600	600,000
350	700	700,000
375	750	750,000
400	800	800,000
450	900	900,000
500	1000	1,000,000
625	1250	1,250,000
750	1500	1,500,000
875	1750	1,750,000
1000	2000	2,000,000

DESIGN GUIDE BASIS:
1. MAXIMUM VALUE OF 0.1 OHM AT EACH POINT
2. 2K CIRCULAR MILS NEEDED FOR EVERY FOOT
3. NEC TABLE 8
4. WHERE NECESSARY TO COMPLY WITH SPECIFICATION REQUIREMENTS, CONDUCTOR MAY BE SIZED ONE AWG LARGER THAN GIVEN IN THIS TABLE.

2F TELECOMMUNICATIONS BONDING SIZE TABLE

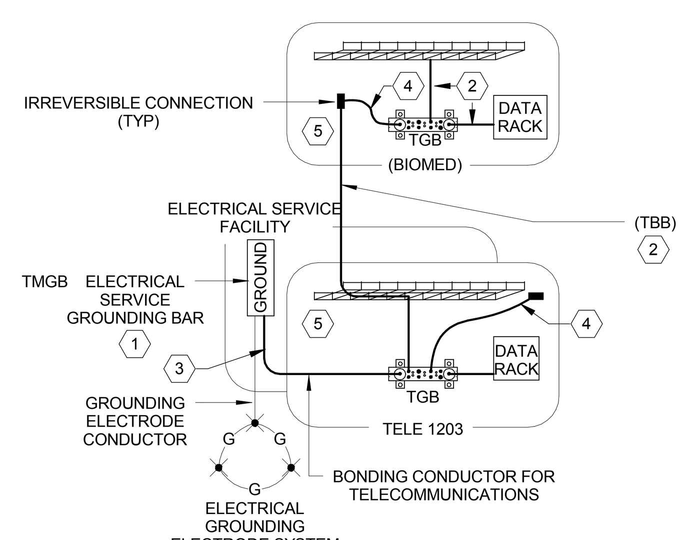

KEYED NOTES :

1. INTERSYSTEM BONDING TERMINATION PER NEC FOR OUTSIDE WIRING FROM RADIO ANTENNA, CATV SYSTEMS, TELEPHONE SYSTEMS, NETWORKED POWERED BROADBAND COMMUNICATIONS SYSTEMS, TELEVISION ANTENNA, FIRE ALARM, BURGLAR ALARM & CENTRAL STATION SYSTEMS.
2. COPPER CONDUCTOR SIZED PER TELECOMMUNICATIONS BONDING SIZE TABLE.
3. MINIMUM CONDUCTOR SIZE SHALL BE LARGER DIAMETER THAN LONGEST TELECOMMUNICATIONS BONDING BACKBONE (TBB) SIZE.
4. MINIMUM CONDUCTOR SIZE SHALL BE ONE GAGE SMALLER IN DIAMETER THAN ASSOCIATED TBB.
5. PROVIDE BONDING CONNECTION TO ALL EQUIPMENT PANELS, RACKS, BACKBOARDS, SLEEVES, CABLE TRAY/RUNWAY, STATIC DISAPATIVE FLOORING AND PANELBOARDS LOCATED IN ROOM.

4F TELECOMMUNICATIONS BONDING
NTS

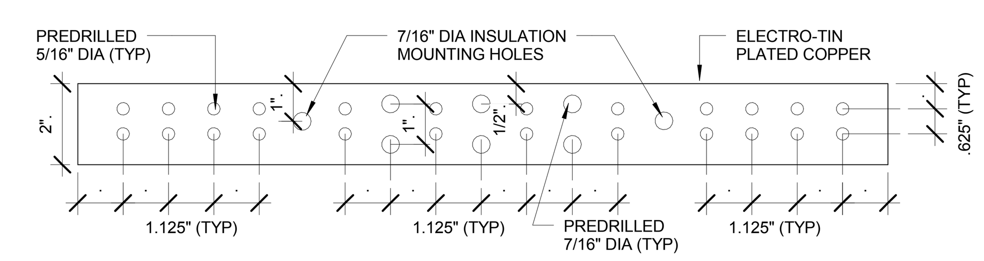

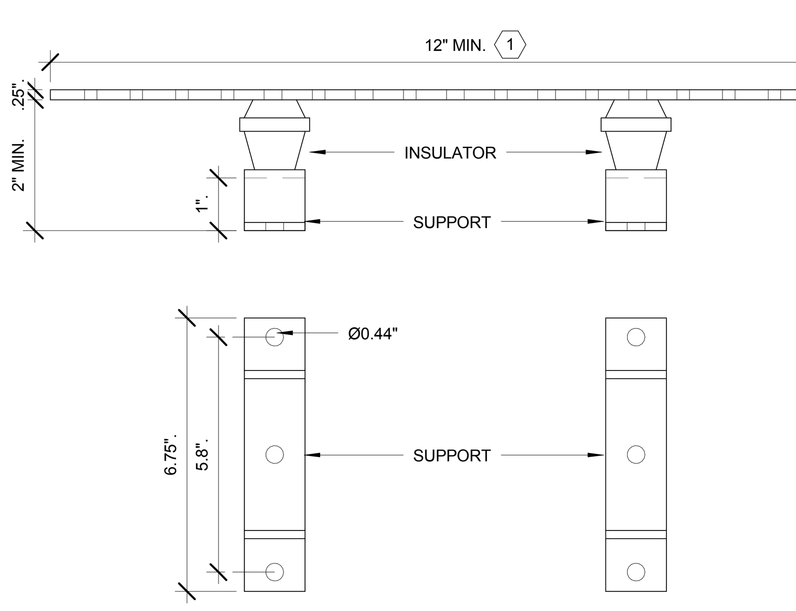

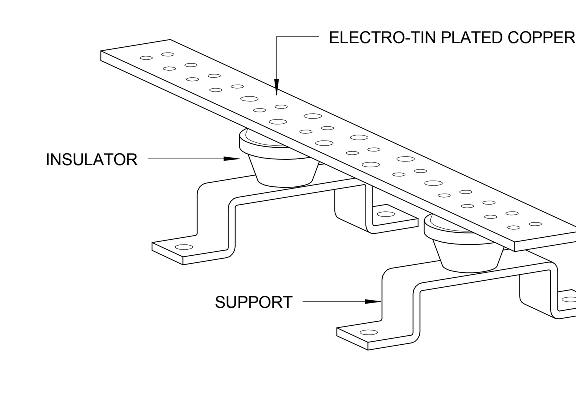

KEYED NOTES :

1. VARY LENGTH TO MEET APPLICATION REQUIREMENTS OF LISTED COMPRESSIONS TWO-HOLE LUGS.

6F TELECOMMUNICATIONS GROUNDING BUSBAR (TGB)
NTS

CONSTRUCTION DOCUMENTS - FINAL BID DOCUMENTS

Revisions: | Date

CONSULTANTS:

Landmark Engineering Group, Inc.
Civil Engineer
2834 104th Street
Urbandale, IA 50322
515.221.1322

SidePlate
Steel Frame
25909 Pala, Ste 200, 92691
Mission Viejo, CA
949.305.7889

Gateway Geotechnical, LLC
Geotechnical Engineer
17736 Edison Avenue
Chesterfield, MO 63005
636.532.7747

SWT Design
Landscape Architect
7722 Big Bend Boulevard
St. Louis, MO 63119
314.644.5700

Hinman Consulting Engineers, Inc
Physical Security
One Bush Street, Suite 510
San Francisco, CA 94104
415.621.4423

The Schachinger Group
Elevator
4255 Stoney Creek Drive
Fort Collins, CO 80525
703.608.2263

ARCHITECT/ENGINEERS:

CANNONDESIGN

© CannonDesign 2014
All rights reserved. No part of this document may be reproduced or utilized in any form, without prior written authorization by The Cannon Corporation.

Drawing Title: **SYSTEMS DETAILS**

Approved: Project Director

Project Title: **John J. Pershing VAMC Clinical & Urgent Care Addition**

Location: **Poplar Bluff, Missouri**

Date: DEC 14, 2015 | Checked: TZ | Drawn: AW/CK

Project Number: **657-351**
CANNON DESIGN PROJECT NO. 03850.00

Building Number

Drawing Number: **EY-501**

Dwg. of

Office of Construction and Facilities Management

Department of Veterans Affairs

VA FORM 08-6231

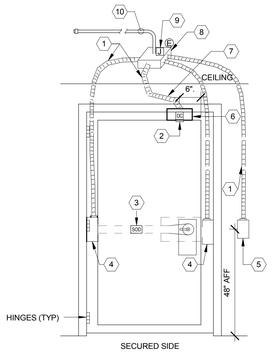

KEYED NOTES :

1. 3/4" FLEXIBLE CONDUIT WITH PULL STRING.
2. HOLE (CENTERED IN BOX).
3. SECURITY OVERRIDE DEVICE LOCATED IN PANIC BAR. (PROVIDED BY DIV. 8, CONNECTED BY DIV. 26.)
4. 1-GANG HINGE MORTAR GUARD BOX WELDED TO FRAME AT HEIGHT OF ELECTRIC POWER TRANSFER HINGE.
5. CARD READER 2-GANG JUNCTION BOX. LOCATED ON EXTERIOR SIDE OF DOOR AS SHOWN ON DRAWINGS. CUT AND MOUNT CARD READER FLUSH IN EXTERIOR WALL. COORDINATE INSTALLATION OF MULLION MOUNTED DEVICE WITH DIVISION 8 AS SHOWN ON FLOOR PLANS.
6. MORTAR GUARD BOX FOR FLUSH MAGNETIC DOOR CONTACT BY DIVISION 26. 3/4" HOLE IN DOOR FRAME AND TOP OF DOOR BUCK BY DIVISION 8.
7. ROUTE THROUGH ALUMINUM FRAME AT STOREFRONT/CURTAIN WALL LOCATIONS AS REQUIRED.
8. MOUNT DEVICES ON SECURE SIDE OF DOOR.
9. ENCLOSURE SHALL CONTAIN READER INTERFACE MODULE AND POWER SUPPLY FOR DOOR DEVICES.
10. BUSHED 3/4"C TO NEAREST IT CLOSET.

1B SINGLE DOOR WITH CARD READER
NTS

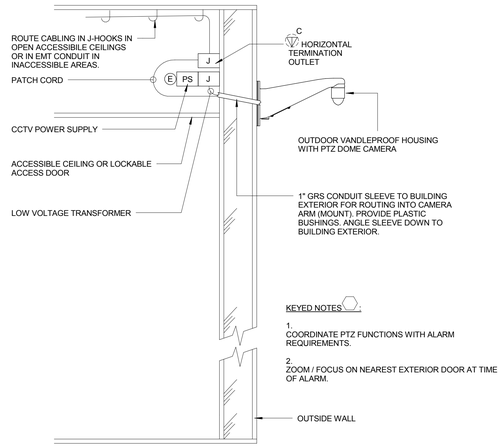

KEYED NOTES :

1. COORDINATE PTZ FUNCTIONS WITH ALARM REQUIREMENTS.
2. ZOOM / FOCUS ON NEAREST EXTERIOR DOOR AT TIME OF ALARM.

2B WALL MOUNT - EXTERIOR VIDEO SURVEILLANCE PTZ DOME CAMERA
NTS

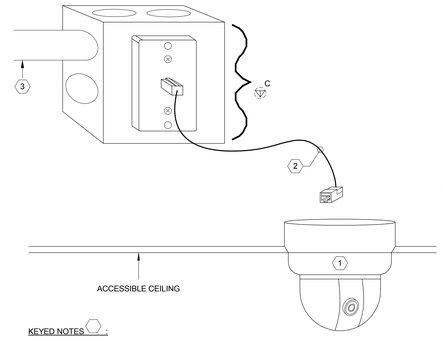

KEYED NOTES :

1. CEILING MOUNTED SECURITY CAMERA. SECURE TO CEILING AND TILE SUPPORT BRACKET.
2. UTP PATCH CABLE.
3. INSTALL ALL CCTV HORIZONTAL CABLING IN CONDUIT.

5B INTERIOR CEILING MOUNTED CAMERA
NTS

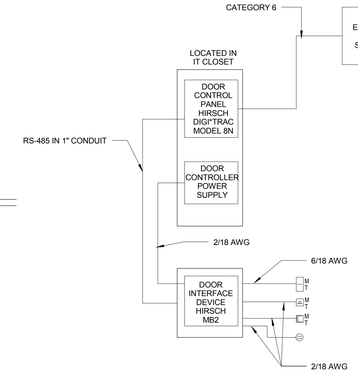

NOTES:

1. EC/TC SHALL COORDINATE THE INSTALLATION OF EQUIPMENT WITH VAMC SECURITY GROUP, ARCHITECT AND OWNER.
2. CONDUIT ROUGH-IN SHALL BE BY THE ELECTRICAL CONTRACTOR.
3. EC/TC SHALL COORDINATE THE INSTALLATION OF EQUIPMENT WITH HIRSCH MANUFACTURER PRIOR TO INSTALLATION.
4. CONTRACTOR SHALL BE RESPONSIBLE FOR SUPPLYING ALL NECESSARY POWER SUPPLIES AND CABLING FOR FULLY OPERATIONAL SYSTEM.
5. ALL CABLING SHALL BE IN COMPLETE CONDUIT SYSTEM.
6. PROVIDE HID R15 READER FOR ALL MULLION MOUNTED LOCATIONS. PROVIDE HID R40 READER AT ALL INTERIOR DOORS. PROVIDE ALL ASSOCIATED CABLING FOR FULLY OPERATIONAL SYSTEM.
7. PROVIDE HEZ 9500/9600 SERIES ELECTRIC STRIKE.

7B ACCESS CONTROL SYSTEM RISER
NTS

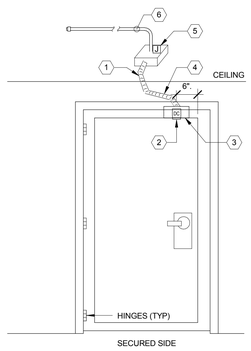

KEYED NOTES :

1. 3/4" FLEXIBLE CONDUIT WITH PULL STRING.
2. HOLE (CENTERED IN BOX).
3. MORTAR GUARD BOX FOR FLUSH MAGNETIC DOOR CONTACT BY DIV. 26. DRILL 3/4" HOLE IN DOOR FRAME AND TOP OF DOOR BUCK BY DIVISION 8.
4. ROUTE THROUGH ALUMINUM FRAME AT STOREFRONT/CURTAIN WALL LOCATIONS AS REQUIRED.
5. MOUNT DEVICES ON SECURE SIDE OF DOOR.
6. BUSHED 3/4"C TO NEAREST IT CLOSET.

2D SINGLE DOOR WITH DOOR CONTACT
NTS

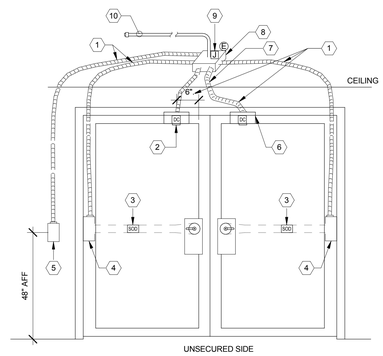

NOTE:
COORDINATE WORK WITH DIVISION 8 AND DIVISION 28

KEYED NOTES :

1. 3/4" FLEXIBLE CONDUIT WITH PULL STRING
2. HOLE (CENTERED IN BOX)
3. SECURITY OVERRIDE DEVICE LOCATED IN PANIC BAR. (PROVIDED BY DIV. 8, CONNECTED BY DIV. 26.)
4. 1-GANG HINGE MORTAR GUARD BOX WELDED TO FRAME AT HEIGHT OF ELECTRIC POWER TRANSFER HINGE. HINGE BY DOOR HARDWARE INSTALLER.
5. CARD READER 2-GANG JUNCTION BOX. LOCATED ON UNSECURED SIDE OF DOOR AS SHOWN ON DRAWINGS. COORDINATE INSTALLATION OF MULLION MOUNTED DEVICE WITH DIVISION 8 AS SHOWN ON FLOOR PLANS.
6. MORTAR GUARD BOX FOR FLUSH MAGNETIC DOOR CONTACT.
7. ROUTE THROUGH ALUMINUM FRAME AT STOREFRONT/CURTAIN WALL LOCATIONS AS REQUIRED
8. MOUNT DEVICES ON SECURE SIDE OF DOOR
9. ENCLOSURE SHALL CONTAIN READER INTERFACE MODULE AND POWER SUPPLY FOR DOOR DEVICES
10. BUSHED 1"C TO NEAREST IT CLOSET.

7D DOUBLE DOOR WITH CARD READER
NTS

CONSTRUCTION DOCUMENTS - FINAL BID DOCUMENTS

Revisions:	Date

CONSULTANTS:

Landmark Engineering Group, Inc.
Civil Engineer
2834 104th Street
Urbandale, IA 50322
515.221.1322

Gateway Geotechnical, LLC
Geotechnical Engineer
17736 Edison Avenue
Chesterfield, MO 63005
636.532.7747

SWT Design
Landscape Architect
7722 Big Bend Boulevard
St. Louis, MO 63119
314.644.5700

Hinman Consulting Engineers, Inc
Physical Security
One Bush Street, Suite 510
San Francisco, CA 94104
415.621.4423

The Schachinger Group
Elevator
4255 Stoney Creek Drive
Fort Collins, CO 80525
703.608.2263

SidePlate
Steel Frame
25909 Pala, Ste 200, 92691
Mission Viejo, CA
949.305.7889

ARCHITECT/ENGINEERS:

CANNONDESIGN

© CannonDesign 2014
All rights reserved. No part of this document may be reproduced or utilized in any form, without prior written authorization by The Cannon Corporation.

Drawing Title: **SYSTEMS DETAILS**

Approved: Project Director

Project Title: **John J. Pershing VAMC Clinical & Urgent Care Addition**

Location: **Poplar Bluff, Missouri**

Date: **DEC 14, 2015** | Checked: **TZ** | Drawn: **AW/CK**

Project Number: **657-351**
CANNON DESIGN PROJECT NO. 03850.05

Building Number

Drawing Number: **EY-502**
Dwg. of

Office of Construction and Facilities Management

Department of Veterans Affairs

VA FORM 08-6231

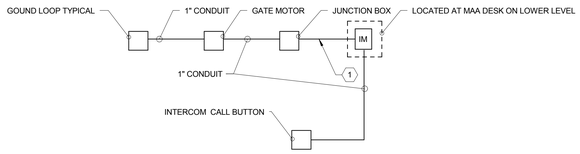

1B CONDUIT ONE-LINE DIAGRAM

KEYNOTE:

1.
CONTRACTOR SHALL INSTALL (1) 1" CONDUIT FOR CAMERA/VOICE CABLING. AND (1) 3/4" FOR DRY CONTACT FOR RELAY MODULE.

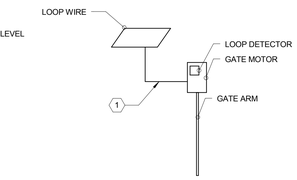

3B LOOP DETECTION DIAGRAM - OUT

KEYNOTE:

1.
LOOP WIRE 14/16 AWG STRANDED, 2 CONDUCTOR STP, MACHINE TOOL WIRE.

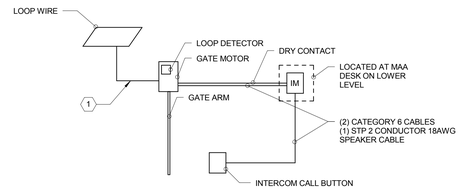

5B LOOP DETECTION DIAGRAM - IN

KEYNOTE:

1.
LOOP WIRE 14/16 AWG STRANDED, 2 CONDUCTOR STP, MACHINE TOOL WIRE

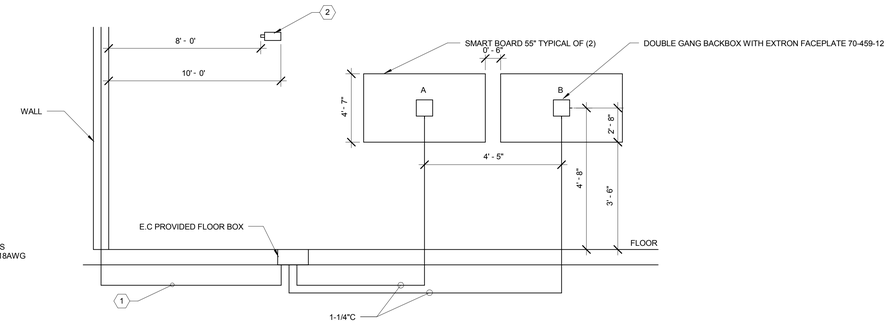

7B AUDIO VIDEO CONDUIT ELEVATION

NOTES:

1. THIS RISER IS DIAGRAMMATIC AND NOT INTENDED TO SHALL ACTUAL ROUTING OR QUANTITIES OF MATERIALS SHOWN. THIS RISER IS SHOWN FOR CLARIFICATION OF CONNECTION LOCATIONS AND CABLE TYPE.

KEYNOTES:

1. 1-1/4" C STUBBED OUT ABOVE CEILING FOR PROJECTOR.
2. MOUNT PROJECTOR 8-10 FEET FROM SCREEN.

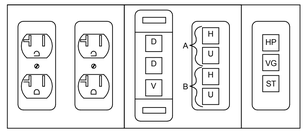

6D AUDIO VIDEO FLOORBOX FACEPLATE AND CABLE CONFIGURATION DETAIL FOR CONFERENCE ROOM

LEGEND:

D = DATA - CAT 6 RJ-45 CABLE TO TELE/DATA ROOM
V = VOICE - CAT 6 RJ-45 CABLE TO TELE/DATA ROOM
H = HDMI - HDMI CABLE TO SMART BOARD
U = USB - USB CABLE TO SMART BOARD
VG = VGA - VGA CABLE TO PROJECTOR
ST = 3.5MM STEREO - 3.5MM STEREO CABLE TO PROJECTOR
HP = HDMI CABLE TO PROJECTOR

ACCESS CONTROL SCHEDULE

DOOR #	CREDENTIAL READER	REQUEST TO EXIT	DOOR HARDWARE	
		MOTION DETECTOR	ELECTRONIC LOCKING HARDWARE (BY OTHERS)	MONITOR DOOR POSITION SWITCH SPDT
LL046.1	CARD READER	X	X	X
LL007	CARD READER	X	X	X
LL023	CARD READER	X	X	X
LL028	CARD READER	X	X	X
LL043	CARD READER	X	X	X
LL001	CARD READER	X	X	X
LL003	CARD READER	X	X	X
LL004	CARD READER	X	X	X
G090.3	CARD READER	X	X	X
ST09.2	N/A			X
ST04A	N/A			X

8E ACCESS CONTROL SCHEDULE

NOTES:

1.
REFER TO ARCHITECTURAL DOOR HARDWARE SCHEDULE FOR A COMPLETE INFORMATION.

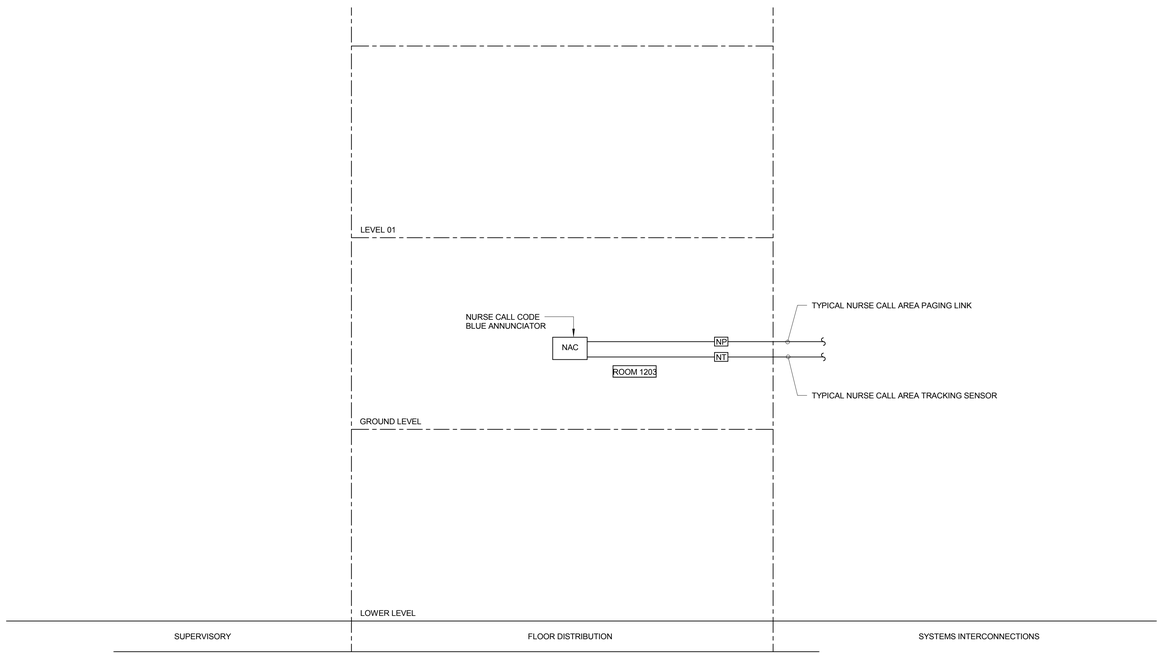

NOTES:
1.
THIS DIAGRAMMITC RISER HAS BEEN DESIGNED FOR RESPONDER V SOLUTION. CONTRACTOR SHALL BE RESPONSIBLE FOR SUPPLYING ALL NECESSARY ACCESSORIES, EQUIPMENT, AND CABLING FOR FULLY OPERATIONAL SYSTEM.

2.
ALL CABLING SHALL BE IN COMPLETE CONDUIT SYSTEM.

2F NURSE CALL/CODE BLUE TRUNK RISER

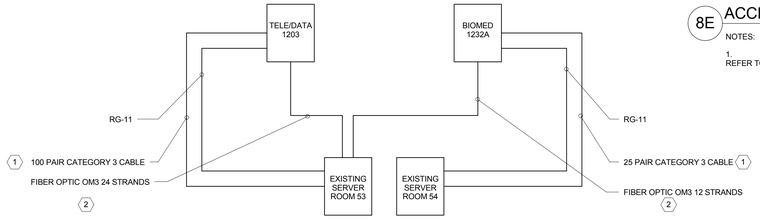

6F RISER DIAGRAM COMMUNICATIONS

NOTES:

1.
ALL CABLING SHALL BE IN A COMPLETE CONDUIT SYSTEM.

KEYNOTES:

1.
TERMINATE ON RACK MOUNTED 110 BLOCK.

2.
RACK MOUNTED FIBER OPTIC PANEL WITH LC CONNECTORS.

CONSTRUCTION DOCUMENTS - FINAL BID DOCUMENTS

Revisions:	Date

CONSULTANTS:

Landmark Engineering Group, Inc.
Civil Engineer
2834 104th Street
Urbandale, IA 50322
515.221.1322

SidePlate
Steel Frame
25909 Pala, Ste 200, 92691
Mission Viejo, CA
949.305.7889

Gateway Geotechnical, LLC
Geotechnical Engineer
17736 Edison Avenue
Chesterfield, MO 63005
636.532.7747

SWT Design
Landscape Architect
7722 Big Bend Boulevard
St. Louis, MO 63119
314.644.5700

Hinman Consulting Engineers, Inc
Physical Security
One Bush Street, Suite 510
San Francisco, CA 94104
415.621.4423

The Schachinger Group
Elevator
4255 Stoney Creek Drive
Fort Collins, CO 80525
703.608.2263

ARCHITECT/ENGINEERS:

CANNONDESIGN

© CannonDesign 2014
All rights reserved. No part of this document may be reproduced or utilized in any form, without prior written authorization by The Cannon Corporation.

Drawing Title: **NURSE CALL RISER DIAGRAM**

Approved: Project Director

Project Title: **John J. Pershing VAMC Clinical & Urgent Care Addition**

Location: **Poplar Bluff, Missouri**

Date: **DEC 14, 2015** | Checked: **TZ** | Drawn: **AW/CK**

Project Number: **657-351**
CANNON DESIGN PROJECT NO. 03850.05

Building Number

Drawing Number: **EY-601**
Dwg. of

Office of Construction and Facilities Management

Department of Veterans Affairs

VA FORM 08-6231