ABBREVIATIONS

A/E	ARCHITECT / ENGINEER
AAHX	AIR TO AIR HEAT EXCHANGER
AB	AIR BLENDER
AAV	AUTOMATIC AIR VENT
ACC	AIR COOLED CONDENSER
ACCH	AIR COOLED CHILLER
ACCU	AIR-COOLED CONDENSING UNIT
ACU	AIR CONDITIONING UNIT
ACD	AUTOMATIC CONTROL DAMPER,MODULATING
ACD-TP	AUTOMATIC CONTROL DAMPER,TWO POSITION
AD	ACCESS DOOR
AF	AFTER FILTER
AFCV	AIR FLOW CONTROL VALVE
AFF	ABOVE FINISHED FLOOR
AFMD	AIR FLOW MEASURING DEVICE
AFW	AIR FOIL WHEEL (FAN)
AHU	AIR-HANDLING UNIT
AMP	AMPERGE
AP	ACCESS PANEL
APD	AIR PRESSURE DROP
ARI	AIR CONDITIONING AND REFRIGERATION INSTITUTE
AS	AIR SEPARATOR
ASME	AMERICAN SOCIETY OF MECHANICAL ENGINEERS
AW	AIR WASHER
AXF	AXIAL FLOW
B	BOILER
BD	BUTTERFLY DAMPER
BDD	BACKDRAFT DAMPER
BDR	BASE BOARD RADIATOR
BFP	BACKFLOW PREVENTER
BFT	BOILER PLANT FIRE TUBE
BG	BOTTOM GRILLE
BHP	BRAKE HORSEPOWER
BHW	HOT WATER HEATING BOILER
BHX	BOILER BLOWDOWN HEAT EXCHANGER
BIW	BACKWARD INCLINED WHEEL (FAN)
BMT	BONE MARROW TRANSPLANT
BR	BOTTOM REGISTER
BSC	BIOLOGICAL SAFETY CABINETS
BT	BLOWOFF TANK
BTC	BLOWOFF TANK CONTROL VALVE
BTU	BRITISH THERMAL UNIT
BTUH	BRITISH THERMAL UNIT PER HOUR
BWT	BOILER PLANT WATER TUBE
C	CENTIGRADE (CELCIUS)
CC	COOLING COIL
CCD	COOLING COIL CONDENSATE DRAIN
CD	CEILING DIFFUSER
CENT	CENTRIFICAL
CFH	CUBIC FEET PER HOUR
CFM	CUBIC FEET PER MINUTE
CFT	CUBIC FEET
CFP	CHEMICAL FEED PUMP
CG	CEILING GRILLE
CH	CHILLER
CHP	CHILLED WATER PUMP
CHW	CHILLER WATER
CHR	CHILLED WATER RETURN
CHS	CHILLED WATER SUPPLY
CI	CAST IRON
CM	CARBON MONOXIDE
CM	CUBIC METER
CM/S	CUBIC METER PER SECOND
CO	CLEAN OUT
CO2	CARBON DIOXODE
COMP	COMPRESSOR UNIT
COP	COEFFICIENT OF PERFORMANCE
CP	CONDENSATE PUMP
CR	CEILING REGISTER
CS	CONDENSATE STORAGE TANK
CSG	CLEAN STEAM GENERATOR
CT	COOLING TOWER
CU	CONDENSING UNIT
CUH	CABINET UNIT HEATER
CV	CONSTANT VOLUME
CW	COLD WATER (POTABLE)
CWCC	CHILLED WATER COOLING COIL
CWP	CONDENSER WATER PUMP
CWR	CONDENSER WATER RETURN (TO COOLING TOWER)
CWS	CONDENSER WATER SUPPLY (FROM COOLING TOWER)

D	DAMPER - AUTOMATIC
D-1	OUTDOOR AIR DAMPER
D-2	RETURN AIR DAMPER
D-3	RELIEF AIR DAMPER
DB	DECIBELS
Db	DRY-BULB TEMPERATURE
DDC	DIRECT DIGITAL CONTROLS
DEG	DEGREE
DF	DIFFUSER
DIA	DIAMETER
DIW	DEIONIZED WATER
DP	DEW POINT TEMPERATURE
DP	DIFFUSER PLATE
DPA	DIFFERENTIAL PRESSURE ASSEMBLY
DPS	DIFFERENTIAL PRESSURE SENSOR
DX	DIRECT EXPANSION
DXCC	DIRECT EXPANSION COOLING COIL
EA	EXHAUST AIR
EAT	ENTERING AIR TEMPERATURE
EC	EVAPORATIVE COOLER
ECC	ENGINEERING CONTROL CENTER
ECU	EVAPORATIVE CONDENSER UNIT
EDH	ELECTRIC DUCT HEATER
EER	ENERGY EFFICIENCY RATIO
EF	EXHAUST FAN
EG	EXHAUST GRILLE
EGS	EMERGENCY GAS SHUTOFF
EGT	ENTERING GLYCOL TEMPERATURE
EH	EXHAUST HOOD
EJ	EXPANSION JOINT
EMD	END OF MAIN DRIP (STEAM)
ENT	ENTERING
ER	EXHAUST REGISTER
ERC	ELECTRIC REHEAT COIL
ERP	ELECTRIC RADIANT PANEL
ESP	EXTERNAL STATIC PRESSURE
ET	EXPANSION TANK
ETO	ETHYLENE OXIDE
EUH	ELECTRIC UNIT HEATER
EWC	EVAPORATIVE WATER COOLER
EWT	ENTERING WATER TEMPERATURE
EX.	EXISTING
F	FAHRENHEIT
F&T	FLOAT AND THERMOSTATIC
F/SDPR	COMBINATION FIRE SMOKE DAMPER
FA	FREE AREA
FC	FLEXIBLE CONNECTION
FCU	FAN COIL UNIT (4 PIPE)
FCUC	FAN COIL UNIT COOLING ONLY
FCUH	FAN COIL UNIT HEATING ONLY
FCW	FORWARD CURVED WHEEL (FAN)
FD	FLOOR DRAIN
FD	FIRE DAMPER
FF	FINAL FILTER
FHX	FLUE GAS/FEEDWATER HEAT EXCHANGER
FM	FLOW METER
FOP	FUEL OIL PUMP
FOT	FUEL OIL TANK
FOHX	FUEL OIL HEAT EXCHANGER
FPM	FEET PER MINUTE
FPS	FEET PER SECOND
FPTU	FAN POWERED TERMINAL UNIT
FR	FLOOR REGISTER
FRP	FIBER REINFORCED POLYESTER
FS	FLOW SWITCH
FSTAT	FREEZESTAT
FT	FEET
FT-LB	FOOT-POUND
FTR	FIN TUBE RADIATION
FV	FACE VELOCITY
GA	GAUGE
GAL	GALLONS
GH	GRAVITY HOOD
GPD	GALLONS PER DAY
GPH	GALLONS PER HOUR
GPM	GALLONS PER MINUTE
GPR	GAS PRESSURE REGULATOR
GS	GALVANIZED STEEL
H	HUMIDIFER
H&CW	HOT & COLD WATER
HAC	HOUSEKEEPING AID CLOSET
HB	HOSE BIBB
HC	HEATING COIL
HD	HEAD

HD	HOOD
HOA	HAND/OFF/AUTOMATIC
HP	HEAT PUMP
HP	HORSEPOWER
HPDT	HIGH PRESSURE DRIP TRAP
HPR	HIGH PRESSURE RETURN (STEAM CONDENSATE)
HPS	HIGH PRESSURE SUPPLY (STEAM)
HRC	HEAT RECOVERY COIL
HRD	HEAT RECOVERY DEVICE
HRP	HYDRONIC RADIANT (CEILING) PANEL
HRW	HEAT RECOVERY WHEEL
HSTAT	HUMIDISTAT
HTM	HUMIDIFIER TERMINAL
HUM	HUMIDIFIER UNIT MOUNTED
HVU	HEATING AND VENTILATING UNIT
HW	HOT WATER
HWC	HOT WATER COIL
HWHC	HOT WATER HEATING COIL
HWP	HEATING HOT WATER PUMP
HWR	HEATING HOT WATER RETURN
HWS	HEATING HOT WATER SUPPLY
HWUH	HOT WATER UNIT HEATER
HVD	HOISTWAY VENT DAMPER
HX	HEAT EXCHANGER
HZ	HERTZ
I/O	INPUT/OUTPUT
IAQ	INDOOR AIR QUALITY
IBT	INVERTED BUCKET TRAP
ICF	IN-LINE CENTRIFUGAL FAN
ICU	INTENSIVE CARE UNIT
ID	INSIDE DIAMETER
IFB	INTEGRAL FACE AND BYPASS
IN	INCHES
IN HG	INCHES OF MERCURY
IN WC	INCH WATER COLUMN
IN WG	INCH WATER GAUGE
IN-LB	INCH-POUND
IPLV	INTERGRATED PART LOAD VALUE
IRH	INTRARED HEATER
IS	INSECT SCREEN
IU	INDUCTION UNIT
IV	INLET VANES
kg	KILOGRAM
kg/HR	KILOGRAM PER HOUR
kPa	KILOPASCAL
kW	KILOWATT
kWh	KILOWATT HOUR
L	LITER
L/h	LITERS PER HOUR
L/m	LITERS PER MINUTE
L/s	LITERS PER SECOND
LAT	LEAVING AIR TEMPERATURE
LBS/HR	POUNDS PER HOUR
LF	LINEAR FOOT (FEET)
LGT	LEAVING GLYCOL TEMPERATURE
LH	LATENT HEAT
LPG	LIQUID PROPANE GAS
LPR	LOW PRESSURE RETURN (STEAM CONDENSATE)
LPRC	LOW PRESSURE STEAM RETURN (CLEAN)
LLHX	LIQUID TO LIQUID HEAT EXCHANGER
LPS	LOW PRESSURE STEAM
LPSC	LOW PRESSURE STEAM (CLEAN)
LSD	LINEAR SLOT DIFFUSER
LTCP	LOCAL TEMPERATURE CONTROL PANEL
LVG	LEAVING
LVR	LOUVER
LWT	LEAVING WATER TEMPERATURE
M	METER, SI UNIT
M/s	METERS PER SECOND (OR METERS/SECOND)
MA	MIXED AIR
MAT	MIXED AIR TEMPERATURE
MAU	MAKE-UP AIR UNIT
MAV	MANUAL AIR VENT
MAX	MAXIMUM
MB	MIXING BOX
MBH	1000 BTUH
MCA	MINIMUM BRANCH CIRCUIT AMPACITY
MER	MECHANICAL EQUIPMENT ROOM
MERV	MINIMUM EFFICIENCY REPORTING VALUE

MH	MANHOLE
MHP	MOTOR HORSEPOWER
MIN	MINIMUM
MM	MILLIMETER
MOV	MOTOR OPERATED VALVE
MPR	MEDIUM PRESSURE RETURN (STEAM CONDENSATE)
MPS	MEDIUM PRESSURE STEAM
MRI	MAGNETIC RESONANCE IMAGING
MTD	MEAN TEMPERATURE DIFFERENCE
MVD	MANUAL VOLUME DAMPER
MZ	MULTI-ZONE
NA	NOT APPLICABLE
NC	NOISE CRITERIA
NC	NORMALLY CLOSED
NG	NATURAL GAS
NGFM	NATURAL GAS FLOWMETER
NO	NORMALLY OPEN
NOAA	NATIONAL OCEANIC & ATMOSPHERIC ADMINISTRATION
NOM	NOMINAL
NPLV	NON-STANDARD PART LOAD VALUE
NPSH	NET POSITIVE SUCTION HEAD
NTS	NOT TO SCALE
OA	OUTSIDE AIR
OAG	OUTSIDE AIR GRILLE
OAI	OUTSIDE AIR INTAKE
OD	OUTSIDE DIAMETER
OFM	OIL FLOWMETER
OR	OPERATING ROOM
P	PUMP
PA	PASCAL
PC	PUMPED CONDENSATE
PCF	POUNDS PER CUBIC FOOT (FEET)
PD	PRESSURE DROP
PEF	PROPELLER (TYPE) EXHAUST FAN
PF	PRE-FILTER
PG	PRESSURE GAGE
PGW	PROPYLENE GLYCOL-WATER (SOLUTION)
PHC	PREHEAT COIL
PPM	PARTS PER MILLION
PRS	PRESSURE REGULATING (VALVE) STATION
PRV	PRESSURE REGULATING VALVE
PSI	POUNDS PER SQUARE INCH
PSIA	POUNDS PER SQUARE INCH – ABSOLUTE
PSIG	POUNDS PER SQUARE INCH – GAGE
PSS	PRIMARY SECONDARY SYSTEM
PSV	PRESSURE SAFETY VALVE
PTAC	PACKAGED TERMINAL AIR CONDITIONER
R/E	RETURN OR EXHAUST
RA	RETURN AIR
RAD	REFRIGERANT AIR DRYER
RAF	RADIO FREQUENCY
RAHX	ROTARY AIR HEAT EXCHANGER
RAT	RETURN AIR TEMPERATURE
RCCH	REMOTE CONDENSER CHILLER
RCU	RECIPROCATING CHILLER UNIT
RD	REFRIGERANT DISCHARGE
RDS	ROOM DATA SHEETS
REA	RELIEF AIR
RF	RETURN FAN
RG	RETURN GRILLE
RH	RELATIVE HUMIDITY
RHC	REHEAT COIL
RHG	REFRIGERANT HOT GAS
RL	REFRIGERANT LIQUID LINE
RLA	RUN LOAD AMPERE
RO	REVERSE OSMOSIS
RPM	REVOLUTIONS PER MINUTE
RR	RETURN REGISTER
RS	REFRIGERANT SUCTION
RTU	ROOF TOP UNIT
RV	RELIEF VALVE
SA	SUPPLY AIR
SAD	SOUND ATTENUATING DEVICE
SAT	SUPPLY AIR TEMPERATURE
SC	SHADING COEFFICIENT
SCFM	STANDARD CUBIC FEET PER MINUTE
SCI	SPINAL CODE INJURY
SCR	SILICON CONTROLLED RECTIFIER
SD	SMOKE DETECTOR

SD	SUPPLY AIR DIFFUSER
SDPR	SMOKE DAMPER
SDR	SMOKE DAMPER (RETURN)
SDS	SMOKE DAMPER (SUPPLY)
SEN	SENSIBLE HEAT
SF	SUPPLY FAN
SG	SUPPLY AIR GRILLE
SH	STEAM HUMIDIFIER
SHC	STEAM HEATING COIL
SI	SQUARE INCHES
SP	STATIC PRESSURE
SP GR	SPECIFIC GRAVITY
SPD	SUPPLY PROCESS AND DISTRIBUTION
SPRV	STEAM PRESSURE REDUCING VALVE
SPS	STATIC PRESSURE SENSOR
SQ FT	SQUARE FOOT (FEET)
SR	SUPPLY AIR REGISTER
SS	STAINLESS STEEL
SSHX	STEAM TO STEAM HEAT EXCHANGER
SSR	SOLID SEPARATOR
ST	STEAM TRAP
SUH	STEAM UNIT HEATER
SV	STEAM PRESSURE REDUCING VALVE
SVS	STEAM VENT SILENCER
SWHX	STEAM TO WATER HEAT EXCHANGER
T & PCV	TEMPERATURE AND PRESSURE CONTROL VALVE
TAB	TESTING, ADJUSTING, BALANCE
TD	TEMPERATURE DIFFERENCE
TDH	TOTAL DYNAMIC HEAD
TDS	TOTAL DISSOLVED SOLIDS
TG	TRANSFER GRILLE
TP	TRAP
TR	TOP REGISTER
TSP	TOTAL STATIC PRESSURE
TSTAT	THERMOSTAT
TU	TERMINAL UNIT
TWU	THRU-WALL UNIT
UC	UNDER CUT
UC	UNIT COOLER
UH	UNIT HEATER
UL	UNDERWRITERS LABORATORY
URV	UPBLAST UNIT VENTILATOR
V	VALVE
VAF	VANE-AXIAL FAN
VAV	VARIABLE AIR VOLUME
VD	VOLUME DAMPER (MANUAL OPPOSED BLADE)
VFD	VARIABLE FREQUENCY DRIVE
VHA	VETERANS HEALTH ADMINISTRATION
VI	VIBRATION ISOLATOR
VIV	VARIABLE INLET VANES
VP	VACUUM PUMP
VPS	VARIABLE PRIMARY SYSTEM
VR	VACUUM (STEAM CONDENSATE) RETURN
VSD	VARIABLE SPEED DRIVE
VUH	VERTICAL UNIT HEATER
W	WATTS
WAG	WASTE ANETHESIA GAS
Wb	WET-BULB (TEMPERATURE)
WC	WATER COOLED
WCCH	WATER COOLED CHILLER
WCCU	WATER COOLED CONDENSING UNIT
WCHP	WATER COOLED HEAT PUMPS
WCPU	WATER COOLED PACKAGED UNIT
WEF	WALL EXHAUST FAN
WF	WATER FILTER
WFCV	WATER FLOW CONTROL VALVE
WFM	WATER FLOWMETER
WFMD	WATER FLOW MEASURING DEVICE
WG	WATER GAGE
WPD	WATER SIDE PRESSURE DROP
YR	YEAR

MECHANICAL GENERAL NOTES

1 ALL WORK SHALL CONFORM TO ALL LOCAL, STATE, AND NATIONAL CODES ALONG WITH ALL VA STANDARDS. EQUIPMENT SHALL BE INSTALLED IN ACCORDANCE WITH MANUFACTURER'S WRITTEN RECOMMENDATIONS.

2 THE MECHANICAL CONTRACTOR SHALL OBTAIN AND PAY FOR ALL PERMITS, FEES, AND INSPECTIONS REQUIRED FOR HIS WORK.

3 ALL MATERIALS, EQUIPMENT AND PRODUCTS INCORPORATED IN THE WORK UNDER THE CONTRACT SHALL BE NEW, OF A SUITABLE GRADE FOR THE PURPOSES INTENDED, AND TO THE EXTENT POSSIBLE, STANDARD PRODUCTS OF THE VARIOUS MANUFACTURERS EXCEPT WHERE SPECIAL CONSTRUCTION OR PERFORMANCE FEATURES ARE CALLED FOR.

4 ANY EQUIPMENT OR MATERIAL DEVIATIONS FROM THAT SPECIFIED OR DETAILED ON THIS DRAWING SHALL BE SUBJECT TO THE APPROVAL OF THE ARCHITECT/ENGINEER. ALL PROPOSED EQUIPMENT DEVIATIONS SUBMITTED SHALL BE SIMILAR BOTH IN QUALITY AND CAPACITY TO THAT EQUIPMENT SPECIFIED.

5 ALL MECHANICAL EQUIPMENT SHALL BE LISTED AND LABELED BY UNDERWRITERS LABORATORIES (U.L.).

6 THE MECHANICAL CONTRACTOR SHALL INSTALL EQUIPMENT AS SHOWN ON THE DRAWINGS ALLOWING FOR SUFFICIENT ACCESS AND CLEARANCE SPACE FOR EQUIPMENT MAINTENANCE, REPAIRS AND REPLACEMENT. PROVIDE PROPER CLEARANCES FOR REQUIRED PIPING AND ELECTRICAL SERVICES AND CONNECTIONS. INSTALL ALL EQUIPMENT WITH REQUIRED ACCESS AND CLEARANCES IN ACCORDANCE WITH MANUFACTURER'S WRITTEN RECOMMENDATIONS AND/OR WITH ALL APPLICABLE CODES AND STANDARDS.

7 THE MECHANICAL CONTRACTOR SHALL COORDINATE THE INSTALLATION AND ROUTING OF ALL PROPOSED DUCTWORK, PIPING AND EQUIPMENT WITHIN THE BUILDING STRUCTURE.

8 THE MECHANICAL CONTRACTOR SHALL PROVIDE AND INSTALL HIS OWN SUPPORT EQUIPMENT. LOCATIONS SHALL BE COORDINATED WITH ALL CONTRACTORS PRIOR TO INSTALLATION.

9 THE ELECTRICAL CONTRACTOR SHALL BE RESPONSIBLE FOR ALL POWER CONNECTIONS TO THE EQUIPMENT PROVIDED UNDER THIS CONTRACT.

10 THE MECHANICAL CONTRACTOR SHALL BE RESPONSIBLE FOR ALL CONTROL WIRING FOR HIS EQUIPMENT.

11 DUCTWORK AND PIPING LAYOUTS AND LOCATIONS ARE SCHEMATIC. DO NOT SCALE THESE DRAWINGS. EXACT ROUTING OF DUCTWORK AND PIPING MUST BE DETERMINED IN THE FIELD. ALL DIMENSIONS SHALL BE FIELD VERIFIED BY THE CONTRACTOR BY ACTUAL MEASUREMENT AND OBSERVATION BEFORE ORDERING OR FABRICATING ANY DUCTWORK, PIPING OR EQUIPMENT. ANY DISCREPANCIES BETWEEN THE REQUIREMENTS OF THE CONTRACT DOCUMENTS AND THE EXISTING CONDITIONS OR DIMENSIONS SHALL BE REPORTED TO THE A/E AND VMAC COTR BEFORE THE PERFORMANCE OF ANY WORK. FAILURE TO VERIFY AND REPORT SHALL CONSTITUTE THE CONTRACTOR'S ACCEPTANCE OF THE EXISTING CONDITIONS AS FIT FOR THE PROPER EXECUTION OF HIS WORK. SEE ARCHITECTURAL DRAWINGS FOR FINAL LOCATION OF CEILING INSTALLED.

12 DUCTWORK AND PIPING SHALL BE KEPT AS CLOSE AND HIGH AS POSSIBLE TO THE BUILDING WALLS, CEILING AND FLOOR AND ROOF STRUCTURE IN ORDER THAT THE MAXIMUM AMOUNT OF SPACE IS AVAILABLE. ADDITIONAL OFFSETS, FITTINGS, ETC. NOT SHOWN BUT REQUIRED TO MAINTAIN MAXIMUM CLEARANCE SHALL BE PROVIDED AT NO ADDITIONAL COST,

13 THE MECHANICAL CONTRACTOR SHALL BE RESPONSIBLE FOR ALL PATCHING, PAINTING AND CLEANING ASSOCIATED WITH THIS PROJECT UNLESS NOTED OTHERWISE.

14 PROVIDE A COMPLETE 1-YEAR WARRANTY ON ALL LABOR AND MATERIALS.

15 CONTRACTOR SHALL FURNISH A BOUND SET OF OPERATING AND MAINTENANCE INSTRUCTIONS FOR ALL EQUIPMENT TO THE OWNER UPON COMPLETION OF PROJECT.

16 INSTALL ESCUTCHEONS IN ALL PLACES WHERE PIPING PENETRATES A WALL IN AN EXPOSED LOCATION.

17 THE MECHANICAL CONTRACTOR SHALL MAKE A COMPLETE REVIEW OF THE MECHANICAL PLANS, INCLUDING THE SCHEDULES AND DETAILS PRIOR TO INSTALLATION OF ANY MECHANICAL SYSTEMS AND SHALL RESOLVE ANY CONFLICTS WITH THE ENGINEER.

18 DRAWING PLANS, SCHEMATICS, AND DIAGRAMS INDICATE GENERAL LOCATION AND ARRANGEMENT OF PIPING SYSTEMS. INSTALL PIPING INDICATED TO BE EXPOSED AND PIPING IN EQUIPMENT ROOMS AND SERVICE AREAS AT RIGHT ANGLES OR PARALLEL TO BUILDING WALLS. DIAGONAL RUNS ARE PROHIBITED UNLESS SPECIFICALLY INDICATED OTHERWISE. INSTALL PIPING FREE OF SAGS AND BENDS. INSTALL PIPING TO ALLOW APPLICATION OF INSULATION

19 THE MECHANICAL CONTRACTOR SHALL TAKE THE LEAD IN PREPARATION OF COORDINATION DRAWINGS. SUCH DRAWINGS SHALL BE COMPLETED WITH COORDINATION FROM THE GENERAL CONTRACTOR AND ALL OTHER MAJOR AND MINOR SUBCONTRACTORS. PROVIDE PLAN VIEWS, SECTIONS AND ELEVATIONS, AS REQUIRED, TO FULLY COORDINATE ALL NEW WORK WITH ITSELF AND EXISTING CONDITIONS. DRAWINGS SHALL SHOW, BUT NOT BE LIMITED TO, ALL DUCTWORK, AIR DISTRIBUTION, MECHANICAL EQUIPMENT, MECHANICAL PIPING, FIRE PROTECTION PIPING, PLUMBING PIPING, CABLE TRAYS, LIGHTING FIXTURES, CEILING GRID AND HEIGHT, BEAMS AND JOISTS (WITH ELEVATIONS MARKED), ELECTRICAL CONDUIT LARGER THAN 2 INCHES IN DIAMETER AND ANY OTHER CEILING MOUNT DEVICES OR EQUIPMENT THAT PROTRUDE INTO THE CEILING CAVITY. IF THERE ARE ANY OUTSTANDING ISSUES THAT CANNOT BE RESOLVED, CONSULT WITH ARCHITECT AND/OR ENGINEER (THROUGH THE VA COTR) FOR GUIDANCE AND MAKE CORRECTIONS IN ACCORDANCE WITH DIRECTIONS GIVEN. IT IS IMPORTANT TO NOTE THAT FABRICATION CANNOT BEGIN UNTIL COORDINATION DRAWINGS HAVE BEEN APPROVED. ANY INSTALLATION COMMENCED PRIOR TO APPROVAL IS TAKEN AT THE CONTRACTORS OWN RISK AND MAY HAVE TO BE MODIFIED, MOVED AND/OR RECONFIGURED AT CONTRACTORS COST.

BID DEDUCTS

ALT	DESCRIPTION (REFER TO SHEET GI103 FOR MORE INFORMATION)
1	DO NOT PROVIDE CCTV CAMERAS THROUGHOUT THE GARAGE. CCTV CABINET, EQUIPMENT, AND ALL CONDUIT AND CABLING TO EACH CAMERA LOCATION SHALL REMAIN IN BASE BID FOR CONNECTION TO FUTURE CAMERAS PROVIDED BY THE VA.
2	DO NOT PROVIDE ELEVATOR NUMBER 2. HOISTWAY SHAFT IS TO REMAIN, BUT REMOVE ALL EQUIPMENT ASSOCIATED WITH ELEVATOR TWO.
3	REMOVE ALL LANDSCAPING FROM SCOPE EXCEPT FOR THE BIO-RETENTION AREA. REPLACE ALL PLANNED LANDSCAPE AREAS WITH SEEDING. REMOVE THIN-SET BRICK FROM SCOPE AND PROVIDE COLORED PRECAST CONC. PC-1 IN ITS PLACE. REMOVE GLAZING AND STORERONT FROM SECONDARY STAIR TOWER. REPLACE OPENINGS WITH FALL DETERRENT DETAIL. REDUCE HEIGHT OF SECONDARY STAIR TO HEIGHT OF TOP LEVEL GARAGE SPANDREL (+37'-9") AND CONTINUE FALL DETERRENT DETAIL AROUND PERIMETER OF SECONDARY STAIR TOWER. REMOVE PREFABRICATED ALUMINUM CANOPY COVER ON TOP LEVEL OF THIRD EGRESS STAIR. REMOVE PRECAST STAIR COMPONENTS AND RAILINGS FROM LEVEL 1 UP TO LEVEL 3 OF THE THIRD EGRESS STAIR. LEAVE THE REQUIRED STAIR THAT CONNECTS LEVELS 3 AND LEVEL 4 FOR EGRESS. REMOVE GLAZING AND STOREFRONT FROM INTERIOR SIDE OF TOP FLOOR LOBBY AT MAIN STAIR TOWER. GLAZING AND STOREFRONT ON EXTERIOR SIDE OF TOP FLOOR IS TO REMAIN.
4	DO NOT PROVIDE AREA #1 - LEVEL 4. REFER TO DRAWINGS ON GI103 FOR EXTENT OF AREA DEDUCT.
5	DO NOT PROVIDE AREA #2 - LEVEL 4. REFER TO DRAWINGS ON GI103 FOR EXTENT OF AREA DEDUCT.
6	DO NOT PROVIDE AREA #3 - LEVEL 4. REFER TO DRAWINGS ON GI103 FOR EXTENT OF AREA DEDUCT.
7	DO NOT PROVIDE AREA #4 - LEVEL 3. REFER TO DRAWINGS ON GI103 FOR EXTENT OF AREA DEDUCT.

HVAC DESIGN DATA

DESIGN CONDITIONS	SUMMER TEMP	SUMMER WET BULB TEMP	SUMMER % HUMIDITY	WINTER TEMP	WINTER DEWPOINT TEMP	WINTER % HUMIDITY	LOWEST AVERAGE ANNUAL DEWPOINT
OUTDOOR DESIGN CONDITIONS	94.5 °F	75.1 °F	41%	22.0 °F	9.6 °F	39%	15 °F
ELECTRICAL ROOM	86.0 °F			40.0 °F			
SECURITY/IT	80.0 °F						
STORAGE							
ELEVATOR HOISTWAY	104.0 °F			32.0 °F			
ELEVATOR MACHINE ROOM	77.0 °F			50.0 °F			

Revisions: | Date

VA | U.S. Department of Veterans Affairs

WILLIAM JENNINGS BRYAN DORN VAMC, COLUMBIA, SC
6439 GARNERS FERRY RD, COLUMBIA, SC 29209

Apogee Consulting Group P.A.
NC License # C-1848
NORTH CAROLINA PROFESSIONAL SEAL 39777 ENGINEER SILAS P. GEORGE
11/30/15

ARCHITECT/ENGINEERS:

PROJECT LEAD
Architect, Civil Engineer
GUIDON DESIGN
905 N. CAPITOL AVE. SUITE 100 INDIANAPOLIS, IN. 46204
317.800.6388 WWW.GUIDONDESIGN.COM
SUSTAINABLE ARCHITECTURE + ENGINEERING

Structural Engineer, Functional Design
CARL WALKER INC.
14045 Ballantyne Corporate Place, Suite 380
Charlotte, NC 28277
Tele: 704.716.8000

MEP Engineer
APOGEE CONSULTING GROUP
1151 Kildaire Farm Road Suite 120
Cary, NC 27511
Tele: 919.858.7420

CONSTRUCTION DOCUMENTS

Drawing Title: MECHANICAL NOTES AND LEGEND
Project Title: CONSTRUCT PARKING GARAGE
A/E Project Number: 15.1003
Building Number: BLDG 108
OFFICE OF FACILITIES MANAGEMENT
Approved for Design Concept: FACILITY MANAGEMENT DIVISION MANAGER
Location: COLUMBIA, SC VAMC
Date: 4 DEC 2015
Checked By: SPG
Drawn By: ORD
Drawing Number: MI001
VA Project Number: 544-306
VA U.S. Department of Veterans Affairs

C:\Users\Omar Ruiz Diaz\Documents\14-686-Mech-Plumb_Omar Ruiz Diaz.rvt

CONDENSING UNIT SCHEDULE

TAG	LOCATION	AREA AND/OR ROOM SERVED	COOLING CAPACITY RANGE (BTU)	HEATING CAPACITY	COMPRESSOR TYPE	POWER	MCA	MOCP	REMARKS
CU-1	ELECTRICAL 106	ELECTRICAL 106	12000	N/A	DC INVERTER-DRIVEN TWIN ROTARY	208/230, 1, 60	13	15	1
CU-2	IT 107	IT 107	12000	N/A	DC INVERTER-DRIVEN TWIN ROTARY	208/230, 1, 60	13	15	1
CU-3	SECURITY 108	SECURITY 108	12000	N/A	DC INVERTER-DRIVEN TWIN ROTARY	208/230, 1, 60	13	15	1
CU-4	ELEV. MACHINE RM.	ELEV. MACHINE RM.	12000	N/A	DC INVERTER-DRIVEN TWIN ROTARY	208/230, 1, 60	13	15	1

REMARKS:

1. INSTALL PER MANUFACTURER'S WRITTEN RECOMMENDATIONS

FAN COIL UNIT SCHEDULE

TAG	LOCATION	AREA AND/OR ROOM SERVED	TYPE	AIRFLOW	TOTAL COOLING CAPACITY	SENSIBLE CAPACITY	HEATING CAPACITY	EAT DB	ELECTRICAL DATA	REMARKS
FCU-1	ELECTRICAL 106	ELECTRICAL 106	WALL MOUNTED	370 CFM	12000.0 Btu/h	9720.0 Btu/h	N/A	75 °F	208/230, 1, 60	1, 2
FCU-2	IT 107	IT 107	WALL MOUNTED	370 CFM	12000.0 Btu/h	9720.0 Btu/h	N/A	75 °F	208/230, 1, 60	1, 2
FCU-3	SECURITY 108	SECURITY 102	WALL MOUNTED	370 CFM	12000.0 Btu/h	9720.0 Btu/h	N/A	75 °F	208/230, 1, 60	1, 2
FCU-4	ELEV. MACHINE RM.	ELEV. MACHINE RM.	WALL MOUNTED	370 CFM	12000.0 Btu/h	9720.0 Btu/h	N/A	75 °F	208/230, 1, 60	1, 2

REMARKS:

1. INSTALL PER MANUFACTURER'S WRITTEN RECOMMENDATIONS.
2. POWER FROM CONDENSING UNIT.

FAN SCHEDULE

TAG	LOCATION	AIRFLOW	TSP	DRIVE	HP (W)	PHASE	VOLT	R.P.M.	SPEED CONTROL	SONES	REMARKS
EF-1	STORAGE 109	100 CFM	0.100 in-wg	DIRECT	(128)	1	115	681	MOTION CONTROL	0.5	1, 2, 3, 4, 5
EF-2	ELECTRICAL 106	50 CFM	0.100 in-wg	DIRECT	(55)	1	115	628	RUN CONTINUOUSLY	0.6	1, 3, 4, 5

REMARKS:

1. CEILING TYPE WITH INTEGRAL GRILLE
2. WITH OCCUPANCY SENSOR
3. WITH MOTOR RATED SWITCH
4. INSTALL PER MANUFACTURER'S WRITTEN RECOMMENDATIONS
5. WITH INTEGRAL BACKDRAFT DAMPER

LOUVER SCHEDULE

TAG	LOCATION	AREA AND/OR ROOM SERVED	SIZE	AIRFLOW	APD	MOUNTING	APPLICATION	TYPE	REMARKS
L-1	STORAGE 109	STORAGE 109	16 X 8	100 CFM	0.02 in-wg	WALL	INTAKE	BRICK VENT	1
L-2	ELECTRICAL 106	ELECTRICAL 106	16 X 8	50 CFM	0.01 in-wg	WALL	INTAKE	BRICK VENT	1

REMARKS:

1. INSTALL PER MANUFACTURER'S WRITTEN RECOMMENDATIONS

ELECTRIC UNIT HEATER SCHEDULE

TAG	LOCATION	AREA AND/OR BLDG SERVED	TYPE	MIN. CAPACITY	POWER			FAN MOTOR			REMARKS
					AMP	PHASE	VOLT	HP	PHASE	VOLT	
EUH-1	ELECTRICAL 106	ELECTRICAL 106	ELECTRIC	1708 Btu/h	4.2	1	120	NA	NA	NA	1, 2, 3, 4
EUH-2	IT 107	IT 107	ELECTRIC	1708 Btu/h	4.2	1	120	NA	NA	NA	1, 2, 3, 4
EUH-3	SECURITY 108	SECURITY 108	ELECTRIC	1708 Btu/h	4.2	1	120	NA	NA	NA	1, 2, 3, 4
EUH-4	ELEV. MACH. RM.	ELEV. MACH. RM.	ELECTRIC	1708 Btu/h	4.2	1	120	NA	NA	NA	1, 2, 3, 4

REMARKS:

1. 500 W ELEMENT.
2. INTEGRAL THERMOSTAT.
3. INSTALL PER MANUFACTURER'S WRITTEN RECOMMENDATIONS.
4. CONVECTION SPECIALTY HEATER.

KEY	NOTE
1	INSTALL FAN COIL UNIT ABOVE DOOR. INSTALL PER MANUFACTURER'S RECOMMENDATIONS PROVIDING NECESSARY CLEARANCE. COORDINATE EXACT LOCATION WITH EQUIPMENT IN ROOM. ROUTE CONDENSATE DRAIN SO IT TERMINATES AT 6" AFF, OUTSIDE ROOM. PROVIDE RIGID PIPE FOR WALL PENETRATION AND ELBOW DOWN ONCE OUTSIDE. ROUTE REFRIGERANT PIPING PER MANUFACTURER'S RECOMMENDATION.
2	SECURELY MOUNT CONDENSING UNIT ON PLATFORM. PROVIDE NECESSARY CLEARANCE AND INSTALL PER MANUFACURER'S RECOMMENDATIONS. SEE 3/MH101.
3	SEE 5/MH101 CEILING EXHAUST FAN DETAIL.
4	MANUFACTURER PROVIDED THERMOSTAT. THIS THERMOSTAT PROVIDES ALL INFORMATION, CONTROL, AND/OR INPUTS TO CONTROL THE MINI-SPLIT SYSTEM.
5	BAS ZONE SENSOR PROVIDED BY CONTROLS CONTRACTOR. SENSOR MONITORS ROOM TEMPERATURE AND TRIGGERS AN ALARM FOR EITHER HIGH OR LOW ROOM TEMPERATURE. IF THE ROOM TEMPERATURE FALLS BELOW 55 DEG F (ADJ) AN ALARM IS ACTIVATED. IF THE ROOM TEMPERARATURE RISES ABOVE 80 DEG F (ADJ) AN ALARM IS ACTIVATED. THE BAS SYSTEM SHALL MAINTAIN TRENDS FOR THE ROOM TEMPERATURE IN MAXIMUM 10 MINUTE INCREMENTS FOR AT LEAST THE PAST 30 DAYS. SYSTEM SHALL BE BACNET COMPATIBLE AND SHALL BE CONNECTED TO THE CAMPUS ECC (ENGINEERING CONTROL CENTER).
6	ELECTRIC UNIT HEATER SET AT 40°F FOR FREEZE PROTECTION.
7	ALIGN BRICK VENT WITH WALL BLOCK COURSE.
8	PROVIDE WALL CAP TERMINATION.

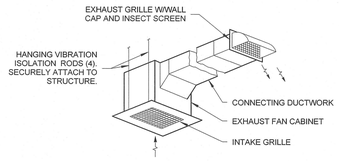

5 MH101 CEILING EXHAUST FAN DETAIL
N.T.S.

ZONE TEMPERATURE MONITORING:

ZONE TEMPERATURE SENSOR MONITORS ROOM TEMPERATURE AND TRIGGERS AN ALARM FOR EITHER HIGH OR LOW ROOM TEMPERATURE:

77° F (ADJ.) COOLING SETPOINT

ALARMS SHALL BE PROVIDED AS FOLLOWS:

LOW ZONE TEMP: IF THE ZONE TEMPERATURE FALLS BELOW 55 DEGREES (ADJ.).

HIGH ZONE TEMP: IF THE ZONE TEMPERATURE RISES ABOVE 80 DEGREES (ADJ.).

T — AI - ZONE TEMP

POINT NAME	HARDWARE POINTS				SOFTWARE POINTS						SHOW ON GRAPHIC
	AI	AO	BI	BO	AV	BV	LOOP	SCHED	TREND	ALARM	
ZONE TEMP	X								X		X
LOW ZONE TEMP										X	
HIGH ZONE TEMP										X	
TOTALS	1	0	0	0	0	0	0	0	1	2	1

TOTAL HARDWARE (1) TOTAL SOFTWARE (3)

4 MH101 BAS ZONE TEMPERATURE MONITORING
N.T.S.

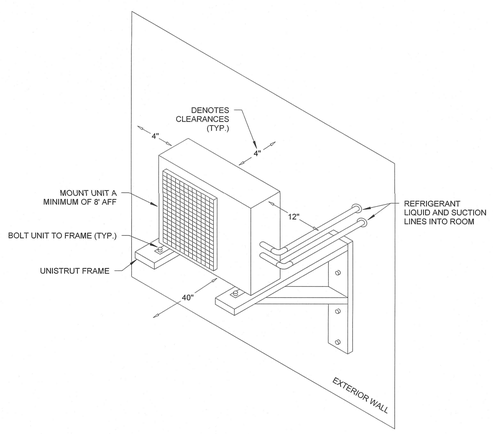

3 MH101 CONDENSING UNIT INSTALLATION DETAIL
N.T.S.

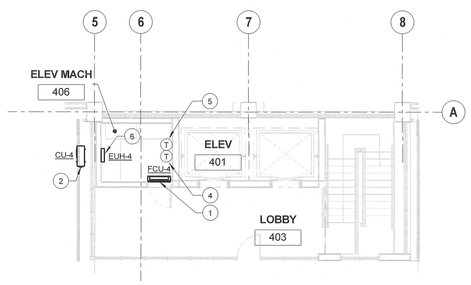

2 MH101 PARTIAL LEVEL 4 MECHANICAL PLAN
1/8" = 1'-0"

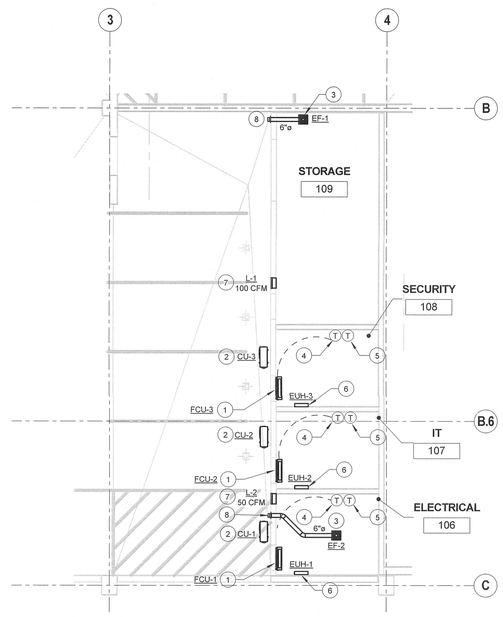

1 MH101 PARTIAL LEVEL 1 MECHANICAL PLAN
1/8" = 1'-0"

Revisions:	Date

VA U.S. Department of Veterans Affairs

WILLIAM JENNINGS BRYAN DORN VAMC, COLUMBIA, SC
6439 GARNERS FERRY RD, COLUMBIA, SC 29209

Apogee Consulting Group P.A.
NC License # C-1848
NORTH CAROLINA PROFESSIONAL SEAL 39777 ENGINEER OMAR P. GELABERT
11/30/15

ARCHITECT/ENGINEERS:

PROJECT LEAD
Architect, Civil Engineer
GUIDON DESIGN
905 N. CAPITOL AVE. SUITE 100 INDIANAPOLIS, IN. 46204
317.800.6388 WWW.GUIDONDESIGN.COM
SUSTAINABLE ARCHITECTURE + ENGINEERING

Structural Engineer, Functional Design
CARL WALKER INC.
14045 Ballantyne Corporate Place, Suite 380
Charlotte, NC 28277
Tele: 704.716.8000

MEP Engineer
APOGEE CONSULTING GROUP
1151 Kildaire Farm Road Suite 120
Cary, NC 27511
Tele: 919.858.7420

CONSTRUCTION DOCUMENTS

Drawing Title: PARTIAL MECHANICAL PLANS AND DETAILS	Project Title: CONSTRUCT PARKING GARAGE	A/E Project Number: 15.1003	OFFICE OF FACILITIES MANAGEMENT
		Building Number: BLDG 108	
Approved for Design Concept: FACILITY MANAGEMENT DIVISION MANAGER	Location: COLUMBIA, SC VAMC	Drawing Number: MH101	VA Project Number: 544-306
	Date: 4 DEC 2015 / Checked By: SPG / Drawn By: ORD		VA U.S. Department of Veterans Affairs

C:\Users\Omar.Ruiz.Diaz\Documents\14-689-Mech-Plumb_Omar.Ruiz.Diaz.rvt