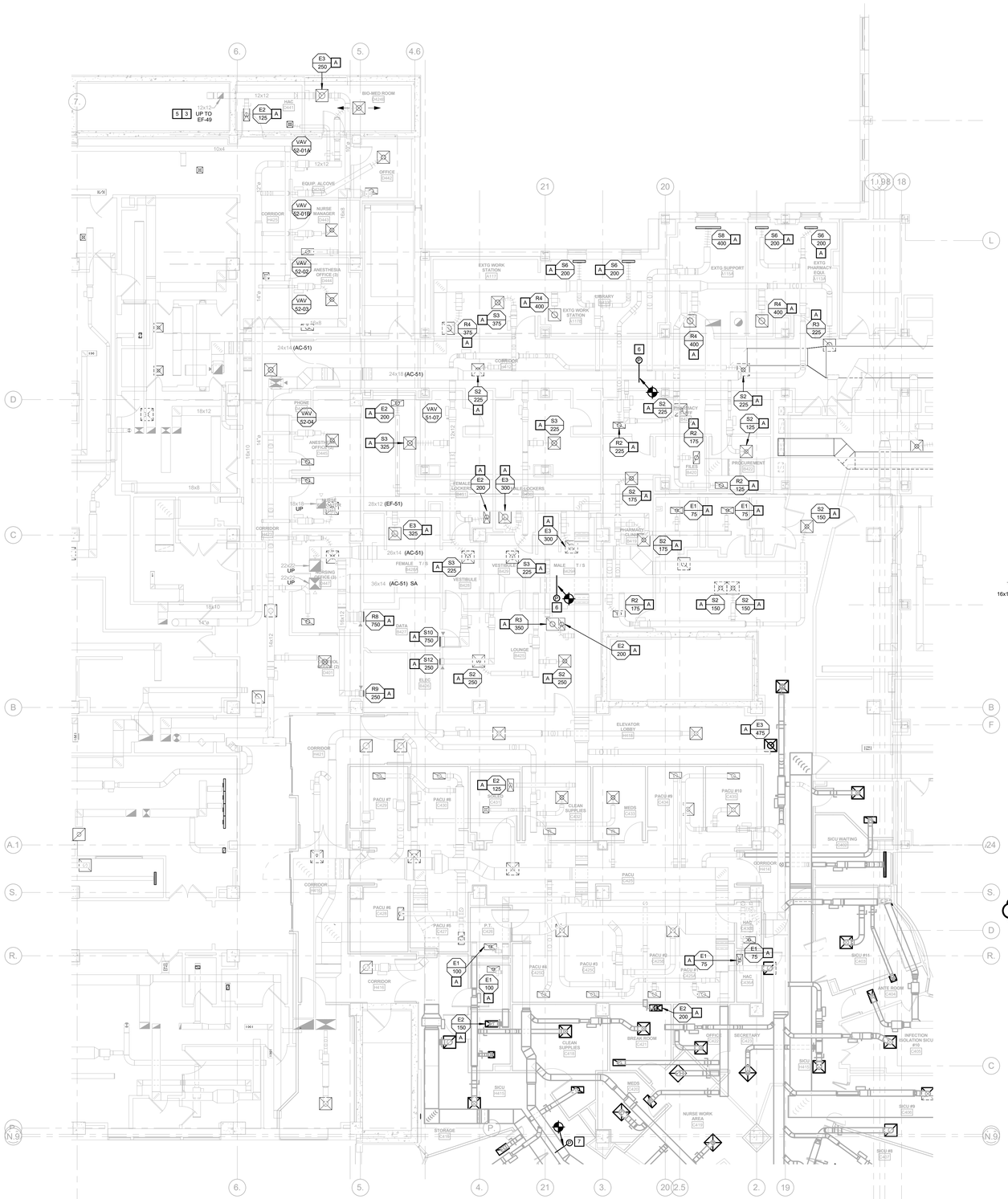

MECHANICAL 4TH FLOOR DUCTWORK RENOVATION PLAN

1/8" = 1'-0"

MECHANICAL GENERAL NOTES:

1. SEE SHEET 1-3-M-001 FOR MECHANICAL GENERAL NOTES.
2. COORDINATE SHUT-DOWNS WITH VA COR.
3. SEE SHEET 1-3-M-106 FOR AIRFLOW BALANCE PLAN.
4. TEST AND BALANCE CONTRACTOR SHALL SUBMIT WRITTEN MECHANICAL PHASING PLAN TO ENGINEER OF RECORD PRIOR TO COMMENCEMENT OF ANY WORK.
5. FLOW SCHEMATICS ARE A FINAL VERSION OF THE ACTUAL SYSTEM. REFER TO DRAWINGS FOR RECOMMENDED ORDER OF WORK TO MAINTAIN HOSPITAL OPERATIONS.

MECHANICAL BALANCING NOTES:

1. TRAVERSE EXISTING DUCTWORK AT THIS LOCATION AT COMPLETION OF RENOVATION WORK. SUBMIT WRITTEN REPORT TO ENGINEER OF RECORD.
2. REBALANCE EXISTING AIR DEVICES TO EACH OPERATING ROOM (EXISTING AND NEW). SUBMIT WRITTEN REPORT TO ENGINEER OF RECORD.
3. BALANCE SUPPLY FAN AFTER VFD IS INSTALLED FOR DUCT STATIC PRESSURE TO ACHIEVE DESIGN AIRFLOW AT FURTHEST VAV BOX.
4. REPLACE SHEAVES AND BELTS FOR FINAL AIRFLOW.
5. SET RETURN FAN VFD TO TRACK SUPPLY FAN MINUS OUTSIDE AIR OFFSET CFM.
6. TEST AND BALANCE CONTRACTOR SHALL TAKE READINGS OF SUPPLY AND RETURN DUCTWORK AFFECTED BY SCOPE OF WORK AND SUBMIT REPORT TO ENGINEER OF RECORD. REBALANCE TO NEW DESIGN AIRFLOW.
7. SUBMIT WRITTEN MECHANICAL PHASING PLAN TO ENGINEER OF RECORD PRIOR TO COMMENCEMENT OF ANY WORK.

MECHANICAL KEYED NOTES:

1. SEE PLANS FOR CONTINUATION.
2. DUCT IS CAPPED FOR FUTURE PROJECT.
3. SEE SHEET 1-2BI-M-101 FOR CONTINUATION.
4. CLOSE DAMPER/CAP DUCTWORK AT THIS LOCATION.
5. COORDINATE SWITCHOVER TO MAINTAIN HVAC TO 4TH FLOOR AREAS AT ALL TIMES.
6. DUCT STATIC PRESSURE SENSOR FOR AC-51. COORDINATE WITH CONTROLS CONTRACTOR.
7. DUCT STATIC PRESSURE SENSOR FOR AC-55. COORDINATE WITH CONTROLS CONTRACTOR.
8. DEMO DUCTWORK SHOWN BOLD-DASHED. REFER TO PLANS.

MECHANICAL BALANCING NOTES:

A. BALANCE AIR DEVICE TO AIRFLOW SHOWN. SUBMIT REPORT TO ENGINEER.

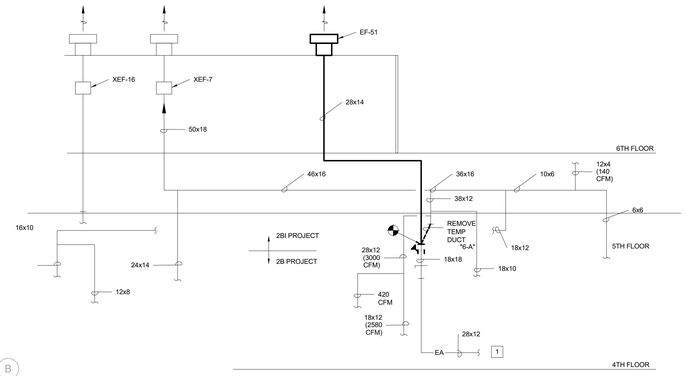

XEF-7 / EF-51

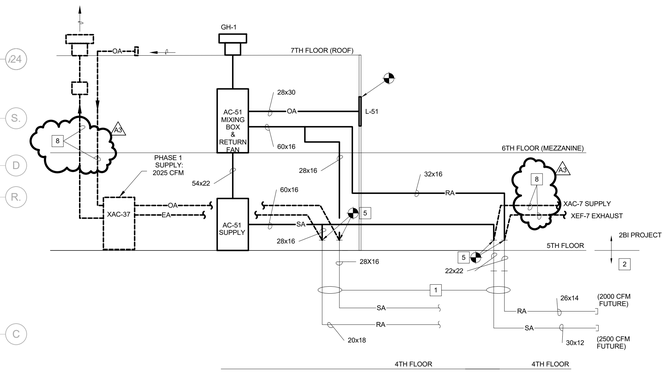

AC-51

BID DOCUMENTS

Revisions:	Date
3 AMENDMENT A00003	06/01/16

CONSULTANTS:

ARCHITECT/ENGINEERS:

FoxArchitects
One Memorial Drive
Suite 1800
Saint Louis, MO 63102
Tel 314.621.4343
Fax 314.621.0261

Veteran Owned Small Business VOSB eVe

SSC
Swim, Schuchat, & Cornett Engineering, Inc.
18207 Edison Avenue
Chesterfield, Missouri 63005
Phone: 636.530.7770 Fax: 636.530.7877
Missouri Certificate of Authority #NC 001244

Drawing Title: MECHANICAL FLOW SCHEMATICS AND AIRFLOW BALANCE PLANS

Approved: Associate Director | Approved: Chief Engineer
Approved: Chief of Staff | Approved: Safety Officer
Approved: Infection Control | Approved: Chief, Police & Security

Project Title: FCA-Upgrade Air Handling Units/Systems

Location: V.A.M.C. ST. LOUIS, MO JOHN COCHRAN DIVISION

Date: 02/24/16 | Checked: Designer | Drawn: Author

Project Number: 657-15-101JC

Building Number: 01

Drawing Number: 1-2BI-M-504

Veterans Health Administration

Department of Veterans Affairs

VA FORM 08-6231, OCT 1978

6/3/2016 11:02:24 AM