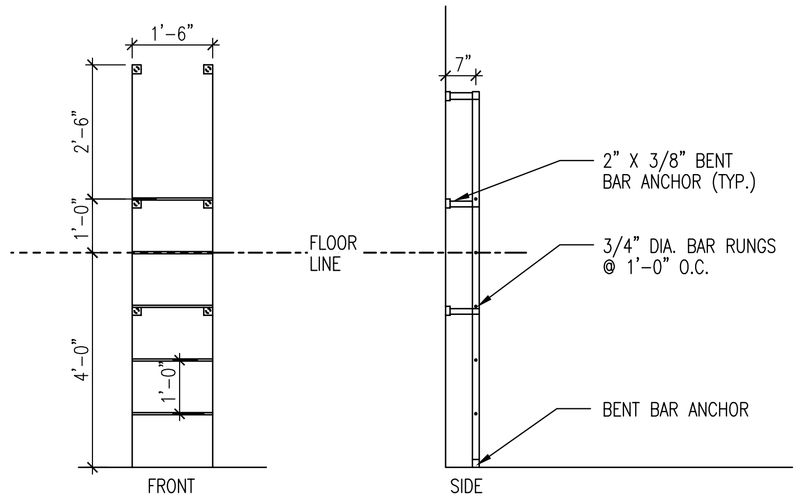

3 A108 LADDER ELEVATIONS
1/2" = 1'-0"

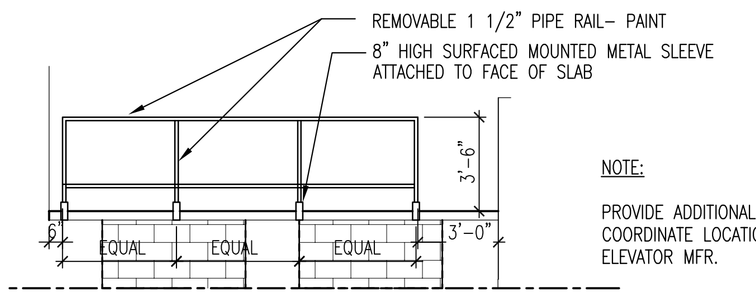

NOTE:

PROVIDE ADDITIONAL LADDER IN ELEVATOR PIT. COORDINATE LOCATION AND HEIGHT WITH SELECTED ELEVATOR MFR.

4 A108 ELEVATION @ GUARDRAIL
1/4" = 1'-0"

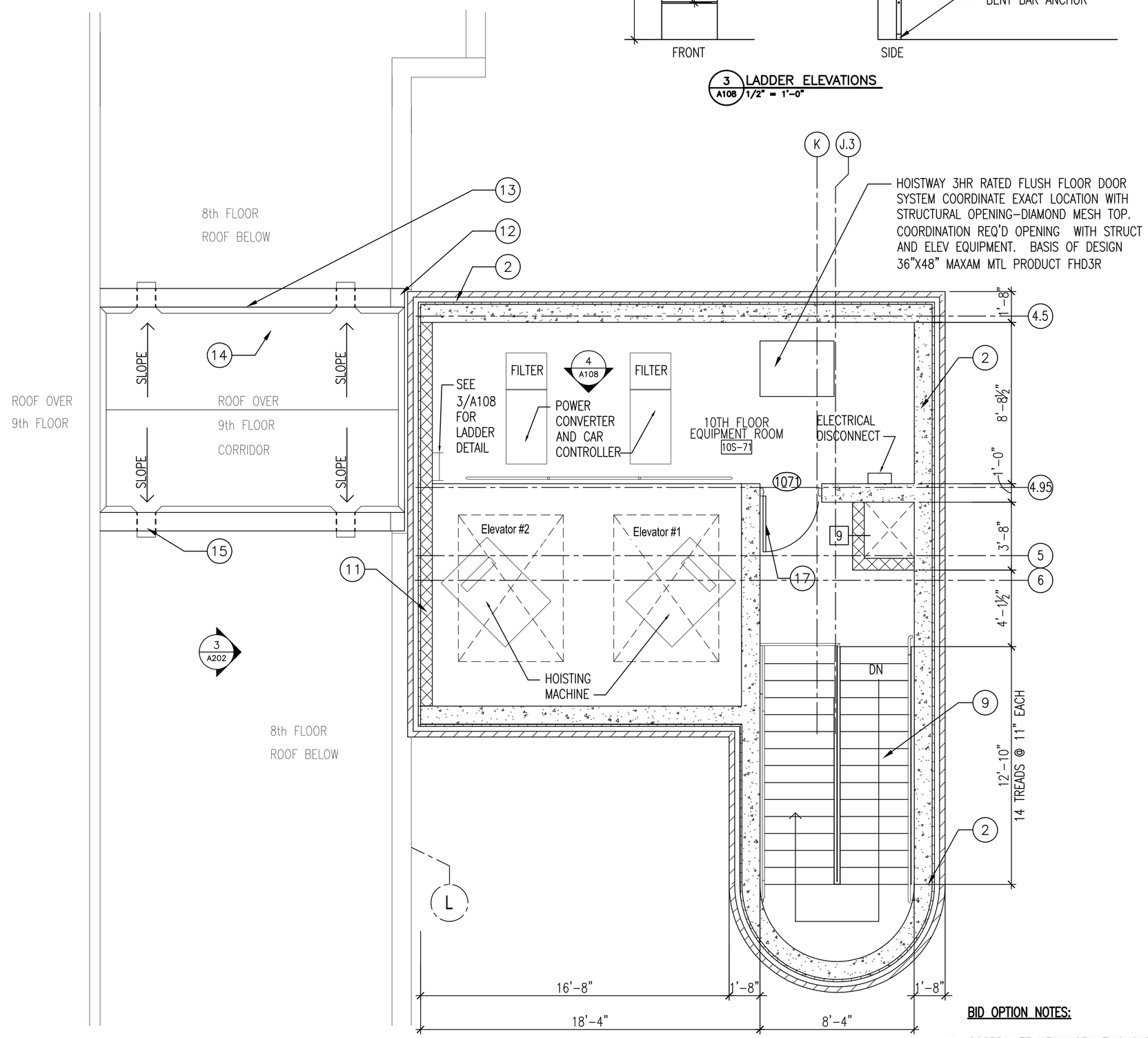

1 A108 ENLARGED FLOOR PLAN 10TH LEVEL EQUIPMENT ROOM
1/4" = 1'-0"

BID OPTION NOTES:

1. COORDINATE NEW WORK THIS SHEET WITH DEDUCTIVE BID OPTIONS IN SPECIFICATIONS 01 00 00 PARAGRAPH 1.2.,A., INCLUDING SUB PARAGRAPHS
   6. BUILDING TIE–IN FLOOR 9.
   8. STAIR TOWER AND BUILDING TIE–IN FLOOR 6,7,8, AND 9.
   9. STAIR TOWER AND BUILDING TIE–IN FLOORS 3,4,5,6,7,8, AND 9.

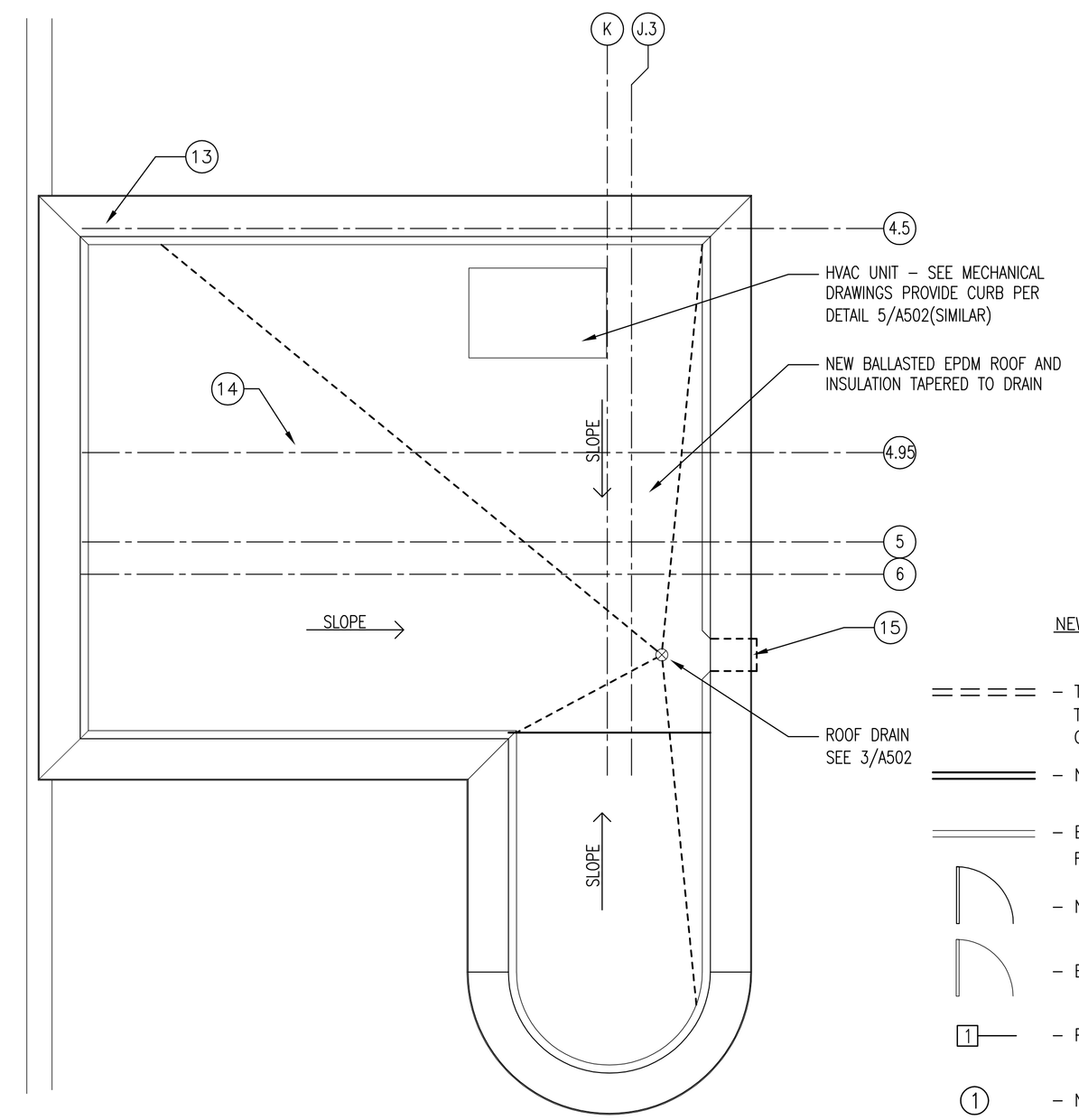

2 A108 ROOF PLAN @ STAIR TOWER
1/4" = 1'-0"

NEW WORK LEGEND

- TEMPORARY CONSTRUCTION TO BE REMOVED @COMPLETION OF WORK
- NEW CONSTRUCTION
- EXIST CONSTRUCTION (TO REMAIN)
- NEW DOOR
- EXIST DOOR (TO REMAIN)
- PARTITION TYPE, SEE DWG A501
- NEW WORK KEYNOTES

0 2' 4' 8'
SCALE: 1/4" = 1'-0"

SEE SHEET A104 FOR KEYNOTES

NORTH

100% REVIEW SUBMITTAL

Revisions	Date

Toland◆Mizell◆Molnar, LLC
590 MEANS STREET NW,
SUITE 200
ATLANTA, GA, 30318
404-214-9774

ALAN J. TOLAND REG. NO. 6768 STATE OF LOUISIANA REGISTERED ARCHITECT

Drawing Title: ENLARGED FLOOR PLAN 10TH FLOOR EQUIPMENT ROOM

Approved Project Engineer:

Project Title: 2ND FLOOR OUTPATIENT MENTAL HEALTH

Building Number: BLDG 1 SOUTH WING | Checked: AJT | Drawn: EO

Location: VA MEDICAL CENTER SHREVEPORT, LOUISIANA

Date: 05-25-2011

Project No.: VA256-C-1047

DRAWING NO.: A108

Dwg. – Of –

Veterans Administration

VA FORM 08-6231A, MAR 1984

U.S. GOVERNMENT PRINTING OFFICE:1984-440-467