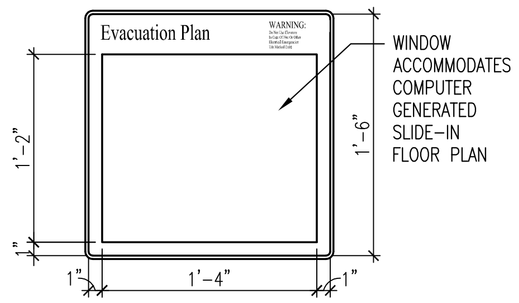

EVACUATION PLAN WITH CHANGEABLE FLOORPLAN INSERT
WINDOW ACCOMODATES COMPUTER GENERATED SLIDE-IN FLOORPLAN THAT CLEARLY MARKS EMERGENCY EXIT ROUTES, FIRE ALARM, AND FIRE EQUIPMENT LOCATIONS. LARGE FINGERTAB IN BACK PLATE. INSERT TO BE PROVIDED BY SIGN COMPANY.
TYPICAL LOCATION: AT NEAR PULL BOXES, ELEVATOR LOBBIES AND EGRESS POINTS.

13 SIGN TYPE REG-2
A801 1 1/2" = 1'-0"

'X' DENOTES FLOOR NUMBER AS PER SIGNAGE SCHEDULE

14 SIGN TYPE REG-3
A801 1 1/2" = 1'-0"

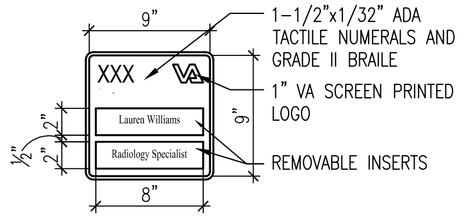

TYPICAL LOCATION: AT PERSONNEL OFFICES

TWO PIECE ROOM IDENTIFICATION SIGN ABLE TO ACCEPT TWO INSERTS UP TO 1/16" THICK. IT MUST ACCOMMODATE 8-1/2" WIDE INSERTS.

'XXX' DENOTES TEXT AS PER SIGNAGE SCHEDULE

12 SIGN TYPE RID-1
A801 1 1/2" = 1'-0"

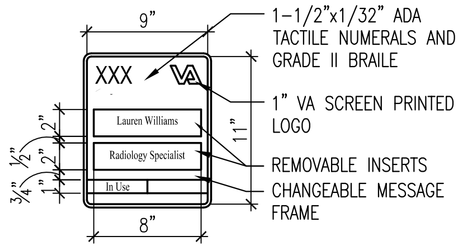

TYPICAL LOCATION: AT GROUP ROOMS

TWO PIECE ROOM IDENTIFICATION SIGN ABLE TO ACCEPT TWO INSERTS UP TO 1/16" THICK. IT MUST ACCOMMODATE 8-1/2" WIDE COMPUTER GENERATED INSERTS. INSERTS BY SIGNAGE VENDOR. TEXT FOR INSERTS PROVIDED BY OWNER AT TIME OF SUBMITTALS.

11 SIGN TYPE RID-2
A801 1 1/2" = 1'-0"

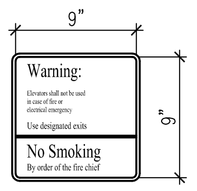

TYPICAL LOCATION: AT ELEVATORS

10 SIGN TYPE INF-1
A801 1 1/2" = 1'-0"

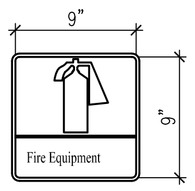

TYPICAL LOCATION: AT EVERY FIRE EXTINGUISHER CABINET

9 SIGN TYPE INF-2
A801 1 1/2" = 1'-0"

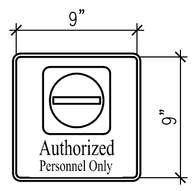

TYPICAL LOCATION: AT ELECTRICAL AND IT CLOSETS

8 SIGN TYPE INF-3
A801 1 1/2" = 1'-0"

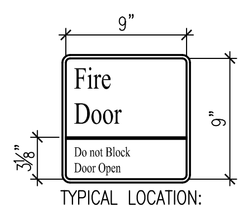

TYPICAL LOCATION: ON FIRE DOOR

7 SIGN TYPE INF-4
A801 1 1/2" = 1'-0"

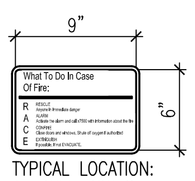

TYPICAL LOCATION: AT PULL BOXES.

6 SIGN TYPE INF-5
A801 1 1/2" = 1'-0"

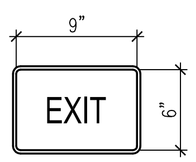

5 SIGN TYPE INF-6
A801 1 1/2" = 1'-0"

NOT USED

4 SIGN TYPE INF-7
A801 1 1/2" = 1'-0"

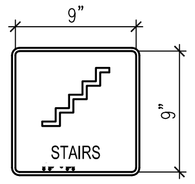

TYPICAL LOCATION: AT ENTRY DOOR TO ALL STAIRS

3 SIGN TYPE REG-1
A801 1 1/2" = 1'-0"

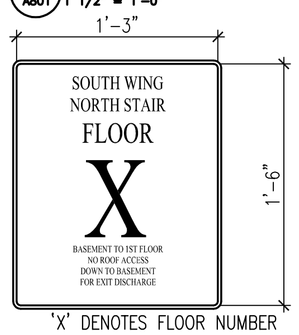

'X' DENOTES FLOOR NUMBER AS PER SIGNAGE SCHEDULE

2 SIGN TYPE REG-3
A801 1 1/2" = 1'-0"

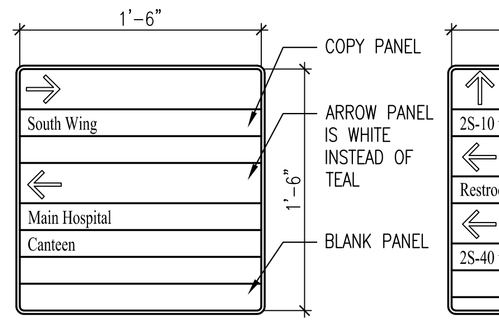

WALL MOUNTED DIRECTIONAL WITH INDIVIDUAL CHANGEABLE PANELS
FRAMED MODULAR UNIT TO ALLOW MAXIMUM FLEXIBILITY OF CHANGES. AVAILABLE WITH ARROW, COPY, AND BLANK PANELS TO EFFECTIVELY POINT THE WAY.

15 SIGN TYPE DIR-1
A801 1 1/2" = 1'-0"

NOTE: "X-X" TEXT TO BE PROVIDED BY VA.

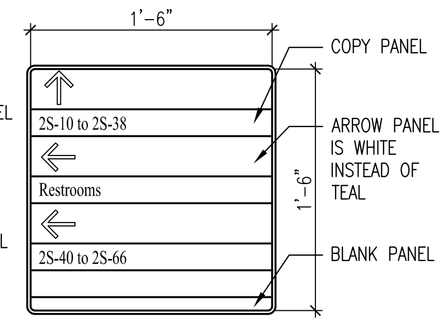

WALL MOUNTED DIRECTIONAL WITH INDIVIDUAL CHANGEABLE PANELS
FRAMED MODULAR UNIT TO ALLOW MAXIMUM FLEXIBILITY OF CHANGES. AVAILABLE WITH ARROW, COPY, AND BLANK PANELS TO EFFECTIVELY POINT THE WAY.

16 SIGN TYPE DIR-2
A801 1 1/2" = 1'-0"

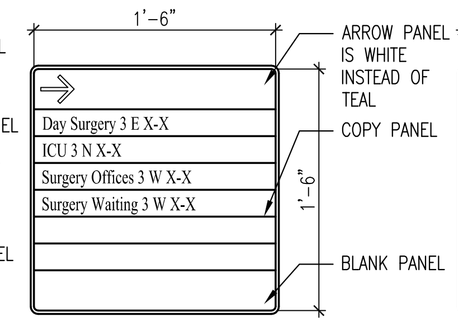

WALL MOUNTED DIRECTIONAL WITH INDIVIDUAL CHANGEABLE PANELS
FRAMED MODULAR UNIT TO ALLOW MAXIMUM FLEXIBILITY OF CHANGES. AVAILABLE WITH ARROW, COPY, AND BLANK PANELS TO EFFECTIVELY POINT THE WAY.

17 SIGN TYPE DIR-3
A801 1 1/2" = 1'-0"

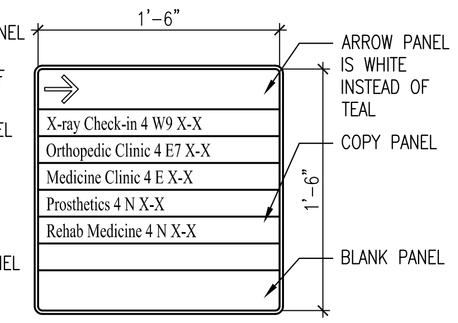

WALL MOUNTED DIRECTIONAL WITH INDIVIDUAL CHANGEABLE PANELS
FRAMED MODULAR UNIT TO ALLOW MAXIMUM FLEXIBILITY OF CHANGES. AVAILABLE WITH ARROW, COPY, AND BLANK PANELS TO EFFECTIVELY POINT THE WAY.

18 SIGN TYPE DIR-4
A801 1 1/2" = 1'-0"

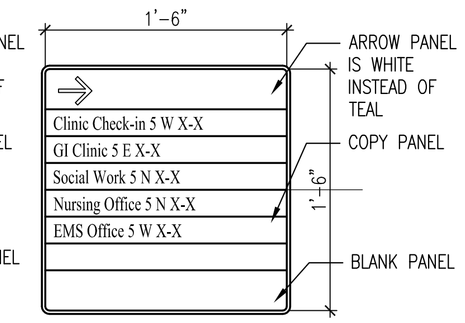

WALL MOUNTED DIRECTIONAL WITH INDIVIDUAL CHANGEABLE PANELS
FRAMED MODULAR UNIT TO ALLOW MAXIMUM FLEXIBILITY OF CHANGES. AVAILABLE WITH ARROW, COPY, AND BLANK PANELS TO EFFECTIVELY POINT THE WAY.

19 SIGN TYPE DIR-5
A801 1 1/2" = 1'-0"

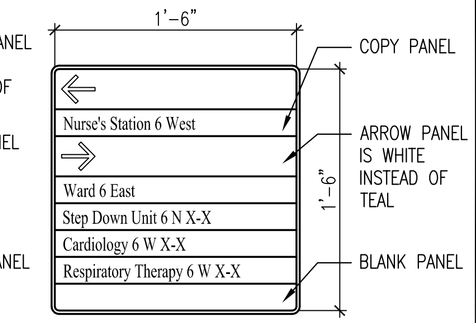

WALL MOUNTED DIRECTIONAL WITH INDIVIDUAL CHANGEABLE PANELS
FRAMED MODULAR UNIT TO ALLOW MAXIMUM FLEXIBILITY OF CHANGES. AVAILABLE WITH ARROW, COPY, AND BLANK PANELS TO EFFECTIVELY POINT THE WAY.

20 SIGN TYPE DIR-6
A801 1 1/2" = 1'-0"

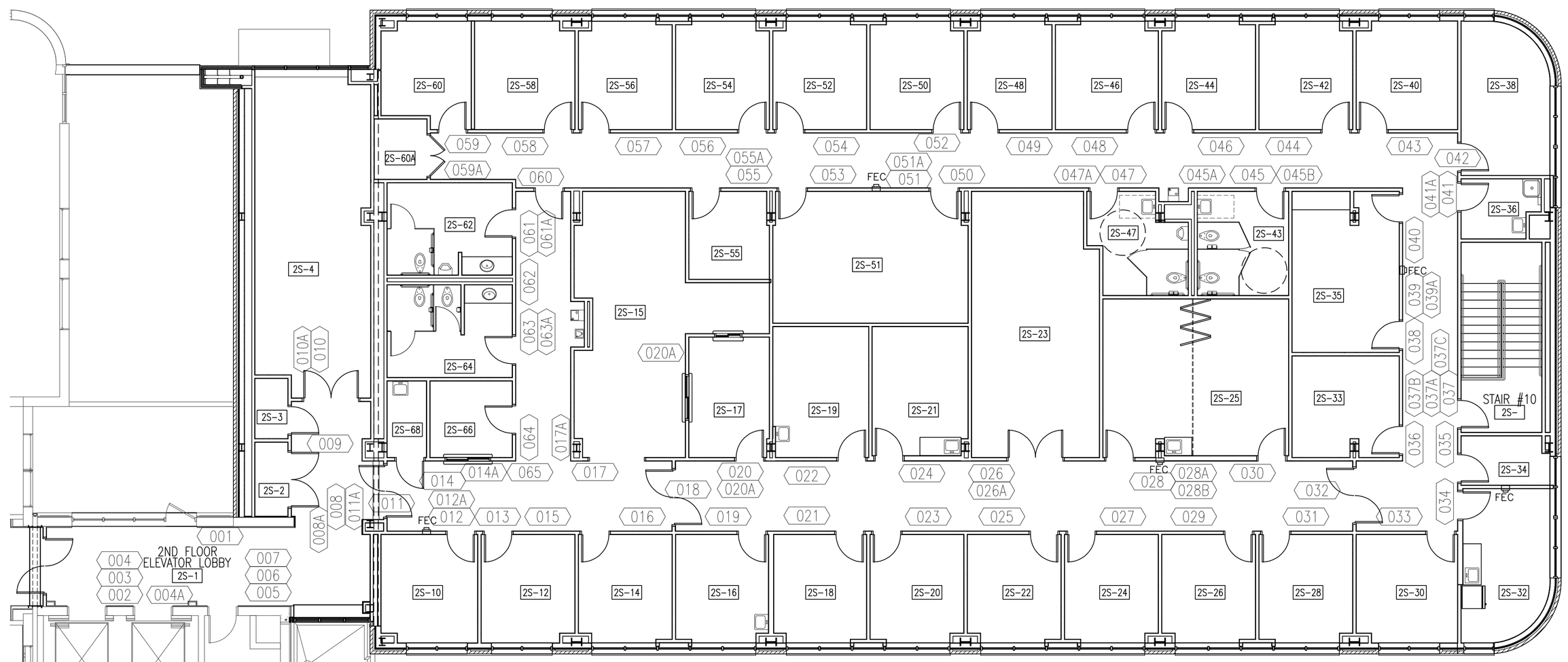

NOTE:
ROOM NUMBERS ON THIS SHEET SHOULD BE REFERENCED TO SIGNAGE SHEETS ONLY AND CORRELATE TO TEXT AND SIGNAGE LOCATIONS PER SIGNAGE SCHEDULE SHEET A802.

1 SIGNAGE PLAN
A801 1/8" = 1'-0"

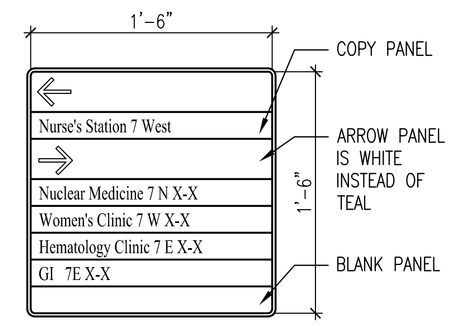

WALL MOUNTED DIRECTIONAL WITH INDIVIDUAL CHANGEABLE PANELS
FRAMED MODULAR UNIT TO ALLOW MAXIMUM FLEXIBILITY OF CHANGES. AVAILABLE WITH ARROW, COPY, AND BLANK PANELS TO EFFECTIVELY POINT THE WAY.

21 SIGN TYPE DIR-7
A801 1 1/2" = 1'-0"

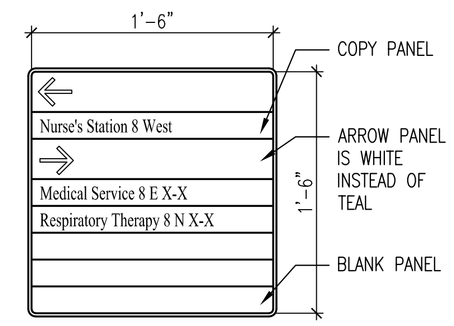

WALL MOUNTED DIRECTIONAL WITH INDIVIDUAL CHANGEABLE PANELS
FRAMED MODULAR UNIT TO ALLOW MAXIMUM FLEXIBILITY OF CHANGES. AVAILABLE WITH ARROW, COPY, AND BLANK PANELS TO EFFECTIVELY POINT THE WAY.

22 SIGN TYPE DIR-8
A801 1 1/2" = 1'-0"

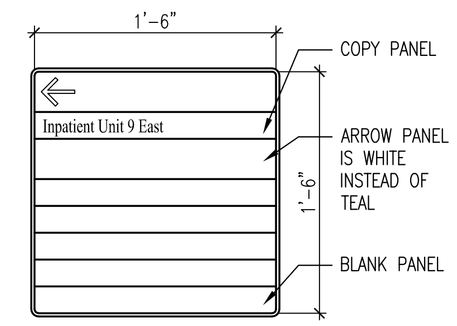

WALL MOUNTED DIRECTIONAL WITH INDIVIDUAL CHANGEABLE PANELS
FRAMED MODULAR UNIT TO ALLOW MAXIMUM FLEXIBILITY OF CHANGES. AVAILABLE WITH ARROW, COPY, AND BLANK PANELS TO EFFECTIVELY POINT THE WAY.

23 SIGN TYPE DIR-9
A801 1 1/2" = 1'-0"

0 4' 8' 16'
SCALE: 1/8" = 1'-0"

0 4" 8" 1'-4"
SCALE: 1 1/2" = 1'-0"

NORTH

100% REVIEW SUBMITTAL

Revisions	Date

Toland◆Mizell◆Molnar, LLC
590 MEANS STREET NW,
SUITE 200
ATLANTA, GA, 30318
404-214-9774

ALAN J. TOLAND REG. NO. 6788 STATE OF LOUISIANA REGISTERED ARCHITECT

Drawing Title: 2ND FLOOR SIGNAGE PLAN AND ELEVATIONS

Project Title: 2ND FLOOR OUTPATIENT MENTAL HEALTH

Date: 05-25-2011

Project No. VA256-C-1047

Approved Project Engineer

Building Number: BLDG 1 SOUTH WING | Checked: - | Drawn: -

Location: VA MEDICAL CENTER SHREVEPORT, LOUISIANA

DRAWING NO. A801

Dwg. - Of -

Veterans Administration