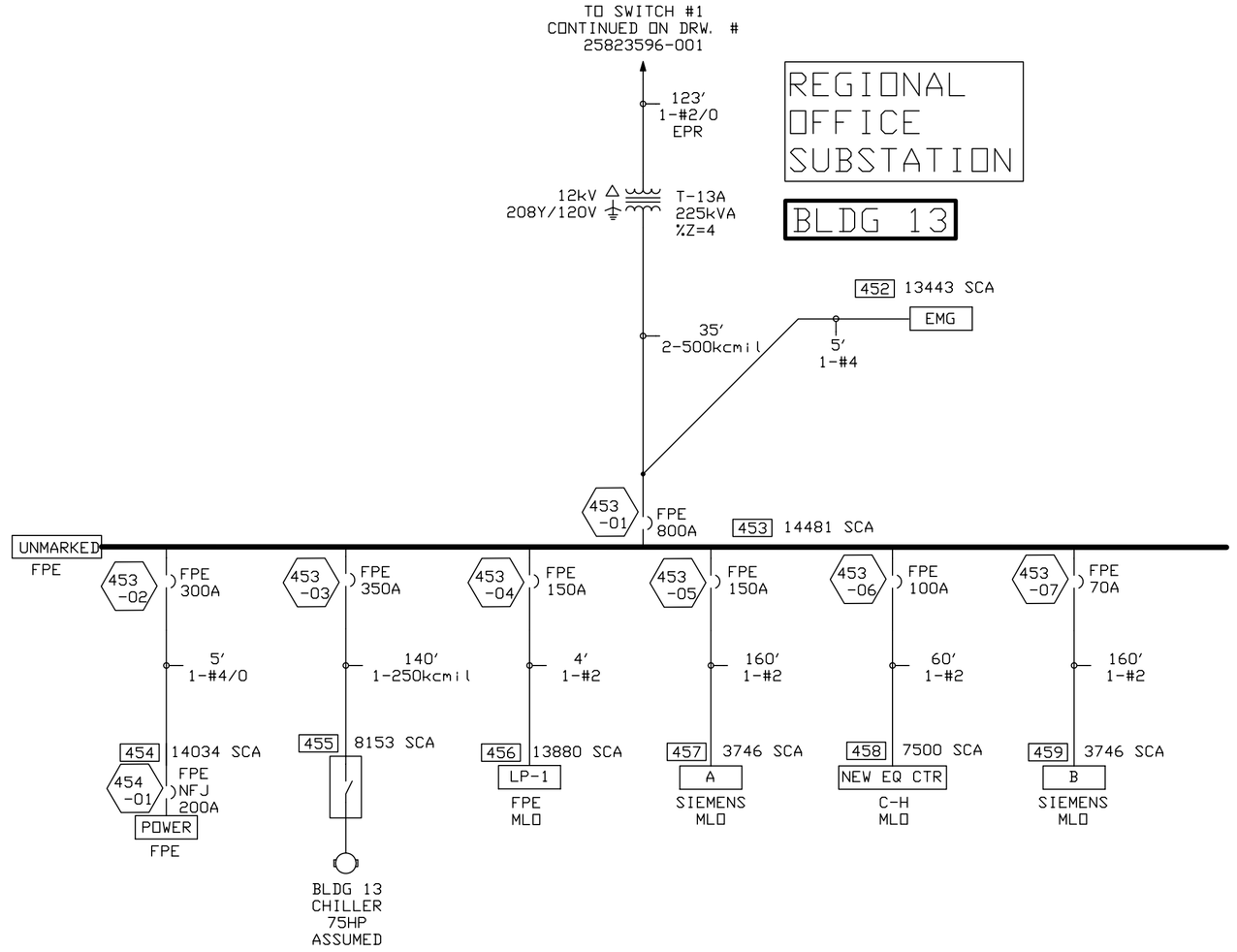

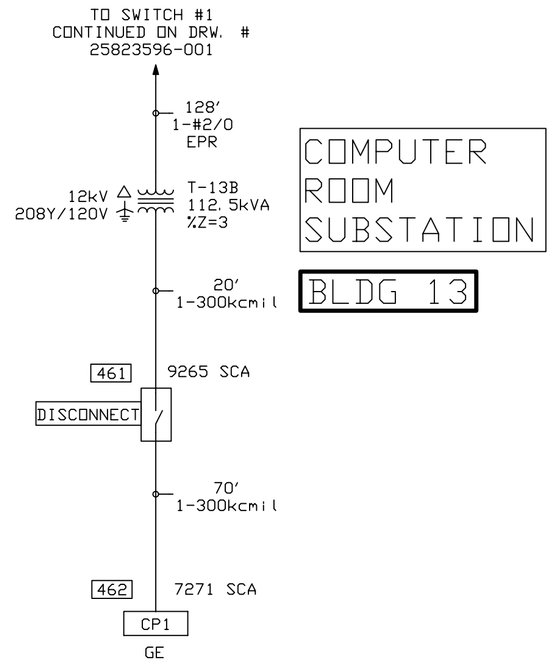

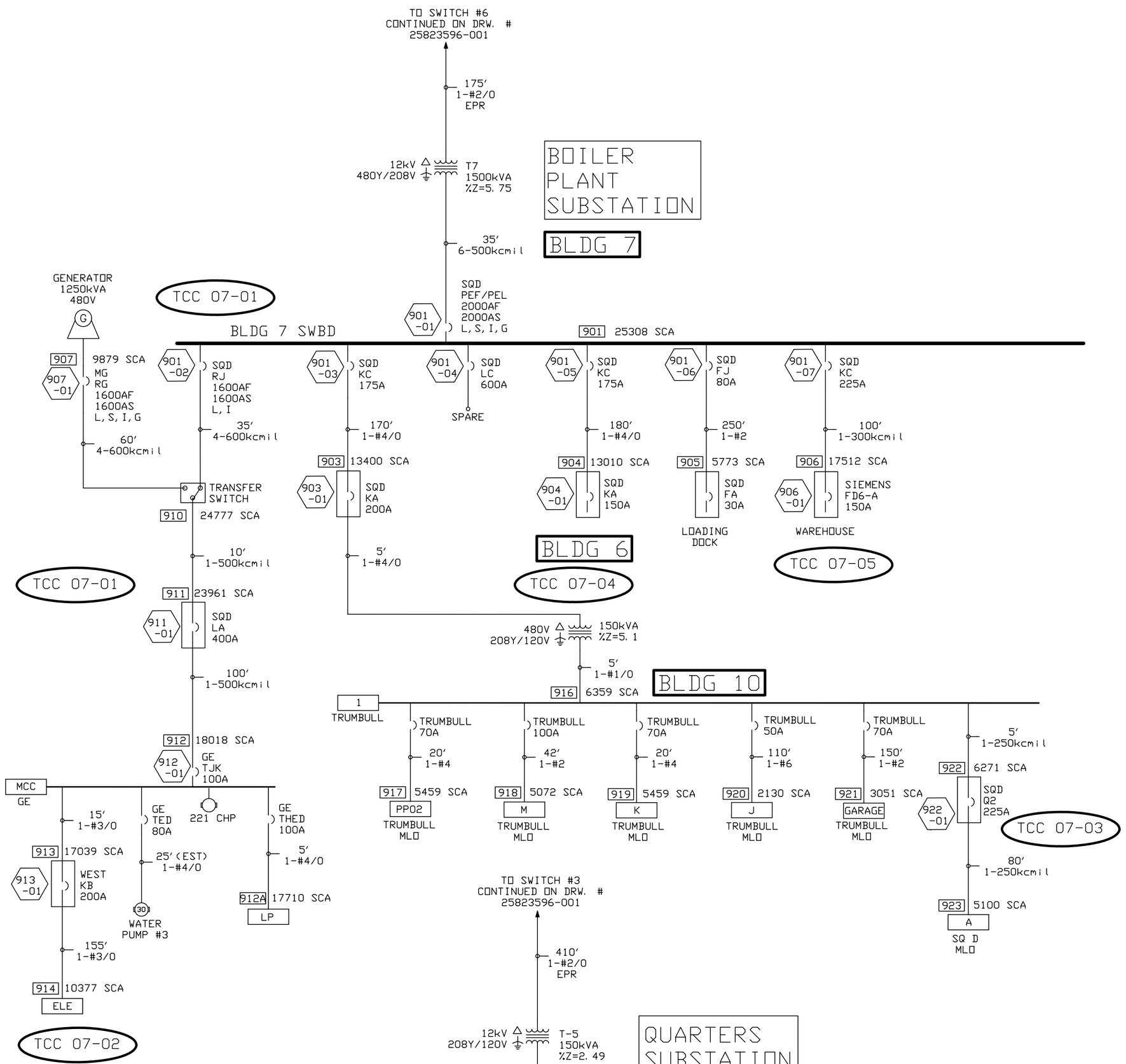

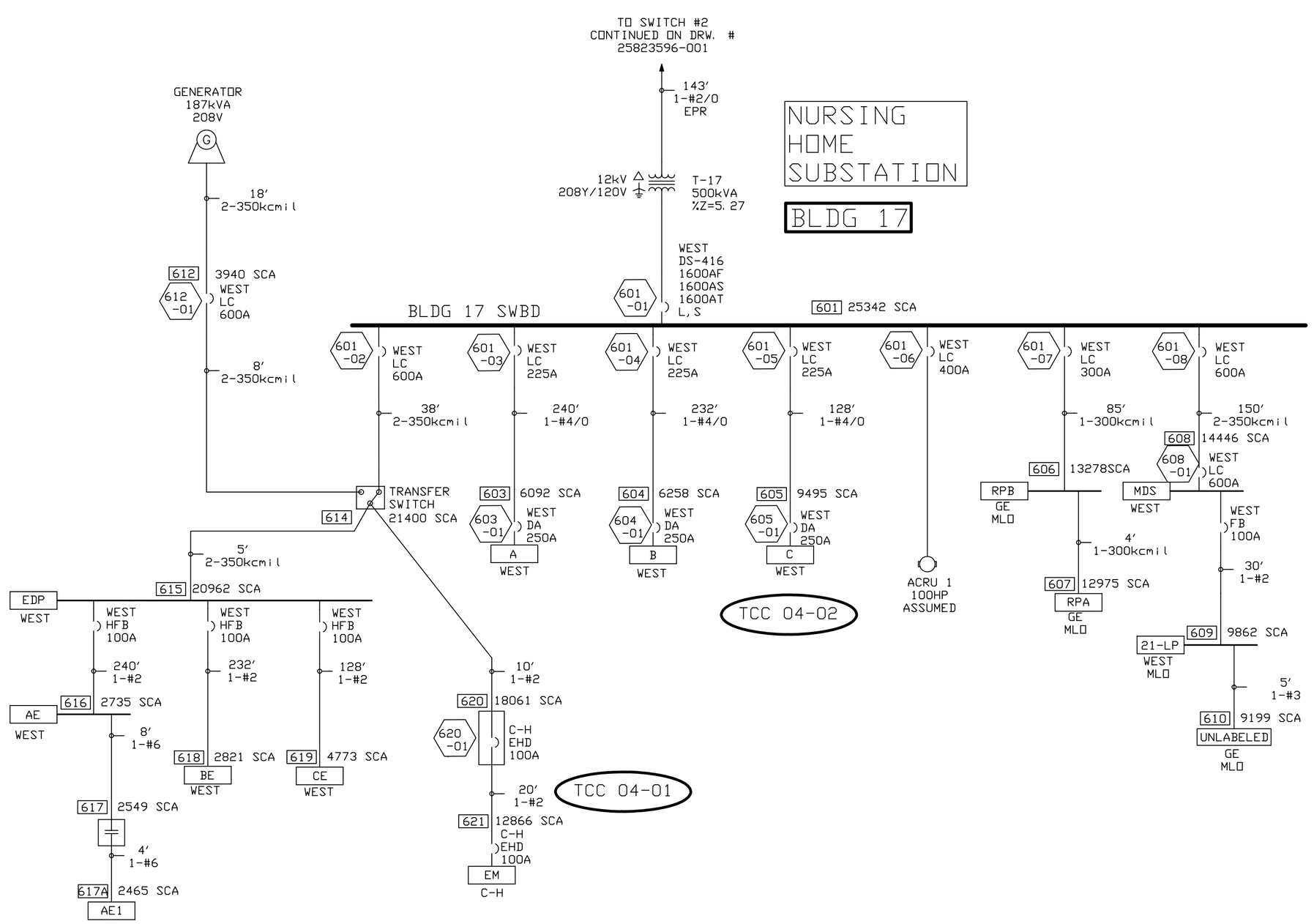

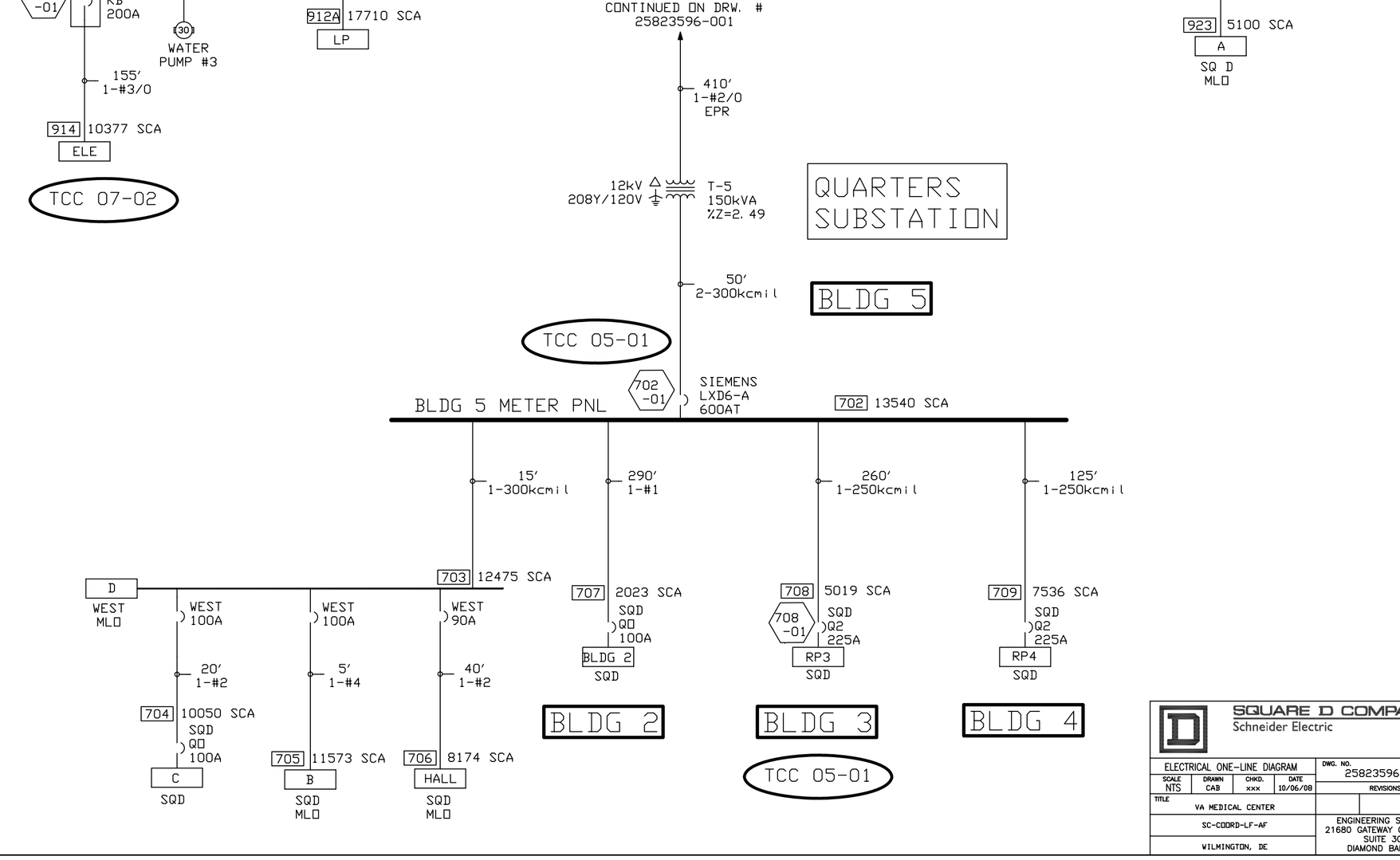

SQUARE D COMPANY
Schneider Electric

ELECTRICAL ONE-LINE DIAGRAM				DWG. NO. 25823596-002
SCALE NTS	DRAWN CAB	CHKD. xxx	DATE 10/06/08	REVISIONS
TITLE VA MEDICAL CENTER				
SC-COORD-LF-AF				ENGINEERING SERVICES 21680 GATEWAY CENTER DR SUITE 300 DIAMOND BAR, CA
WILMINGTON, DE				