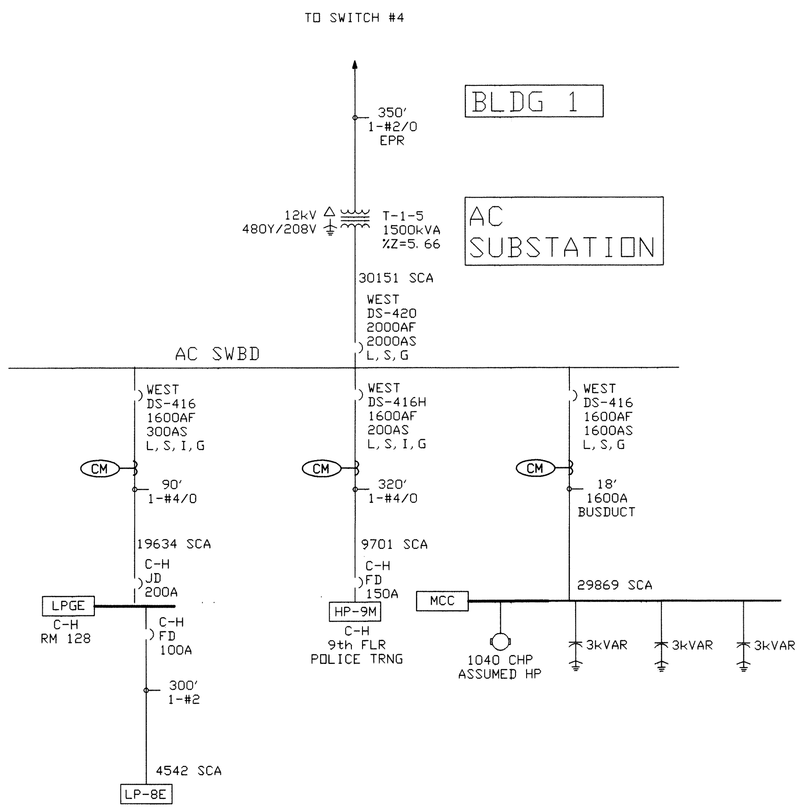

DRAWING NOTES:

1. ALL TRUMBULL PANELBOARDS ARE TO BE REPLACED AS SPECIFIED IN PANEL SCHEDULES, DRAWINGS E-14 & E-15..

2. ALL FEEDERS SHOWN BOLD ARE NEW OR ARE TO BE REPLACED WITH NEW WIRE IN EXISTING CONDUIT. SEE LEGEND ON DWG. E-13.

3. SEE DRAWING T-2 FOR NOTES, SYMBOLS, LEGEND AND MAIN FEEDER SCHEDULE

4. REPLACEMENT OF "MCC" IS BID ALTERNATE. SEE DETAIL F-DWG. E1A AND SPECIFICATIONS.

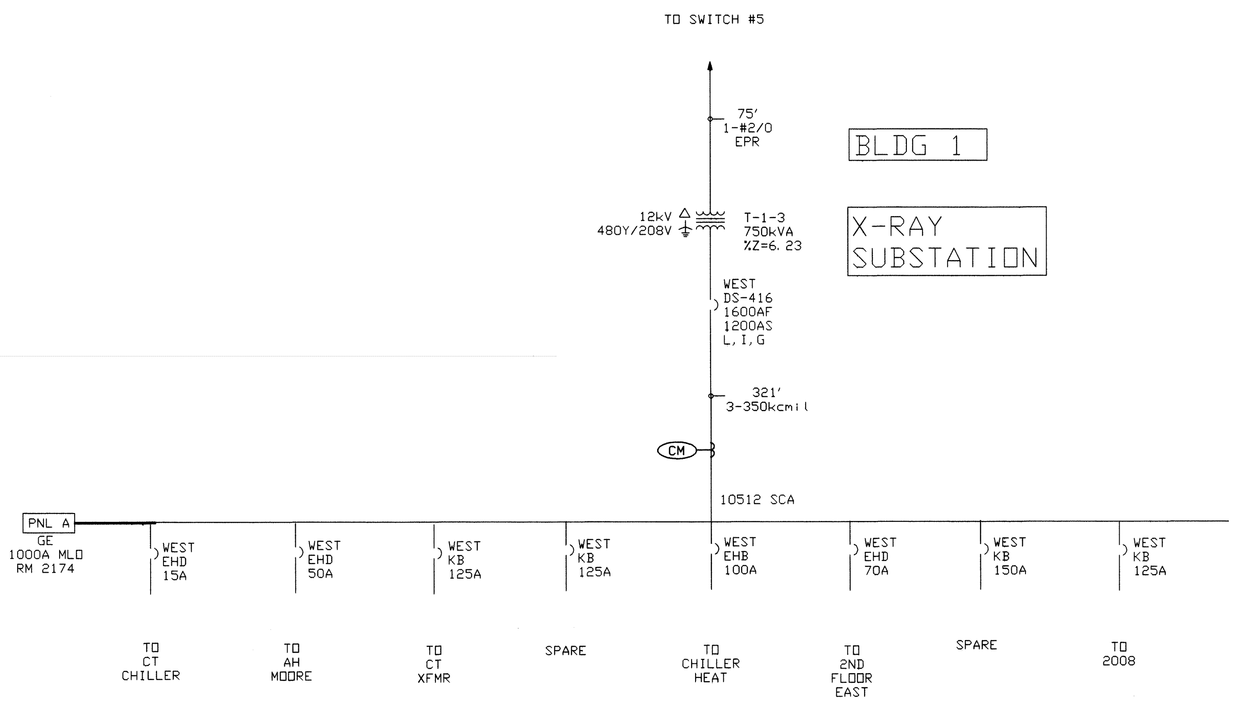

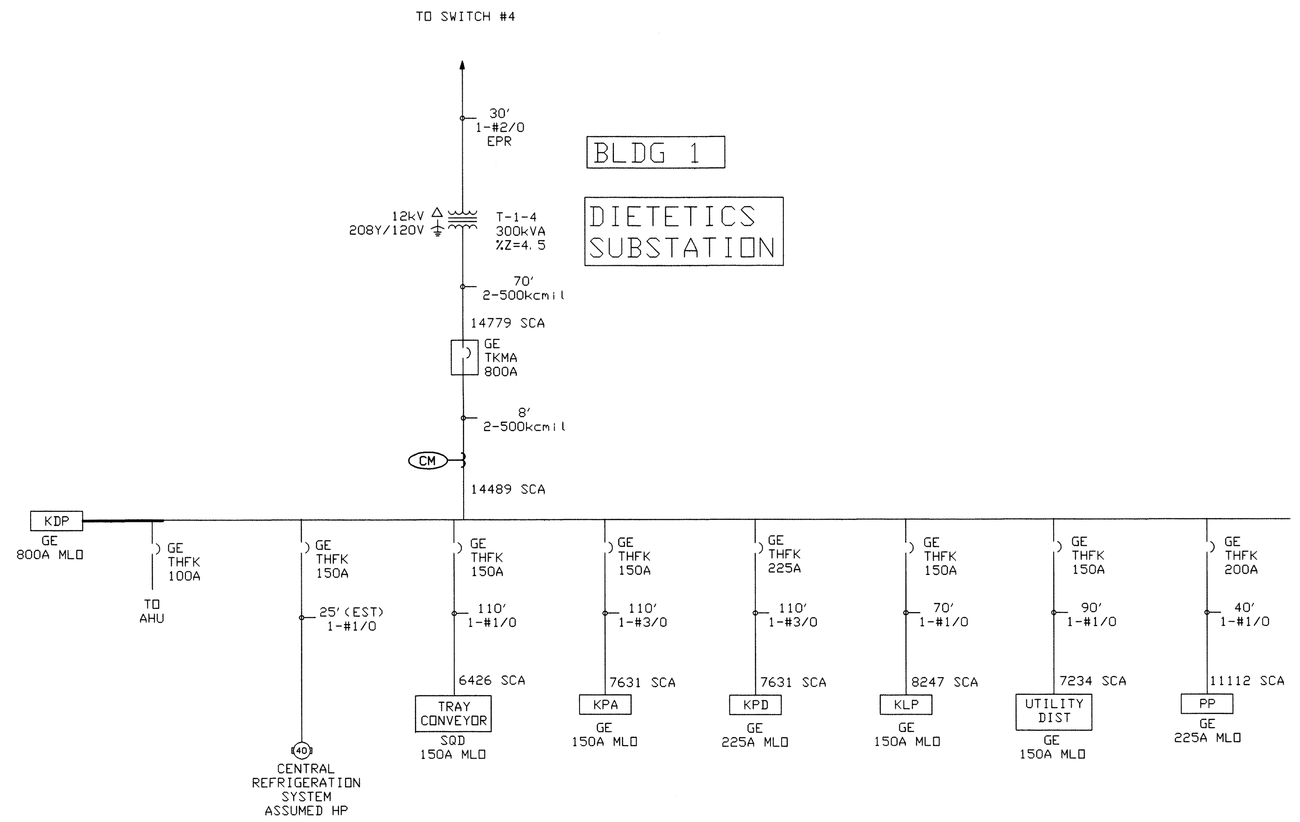

Revisions	Date

VA FORM 08-6231, OCT 1978

Professional Seal

DESIGN CONSULTANT:

DCS INFRASTRUCTURE, LLC
MOUNT HOLLY, NJ

Drawing Title: ONE-LINE DIAGRAM AC, DIETETICS & X-RAY POWER SYSTEMS

Approved:

Approved:

Project Title: UPGRADE SECONDARY ELECTRICAL DEFICIENCIES

Building Number: 01

Checked

Drawn

Location: VAMC WILMINGTON DELAWARE

Date: 10 JULY 09

Project No. 460-08-104

Drawing No. E-17

VAMC, WILMINGTON

Department of Veterans Affairs

VA