SIEMENS

BUILDING 9: AS-BUILT

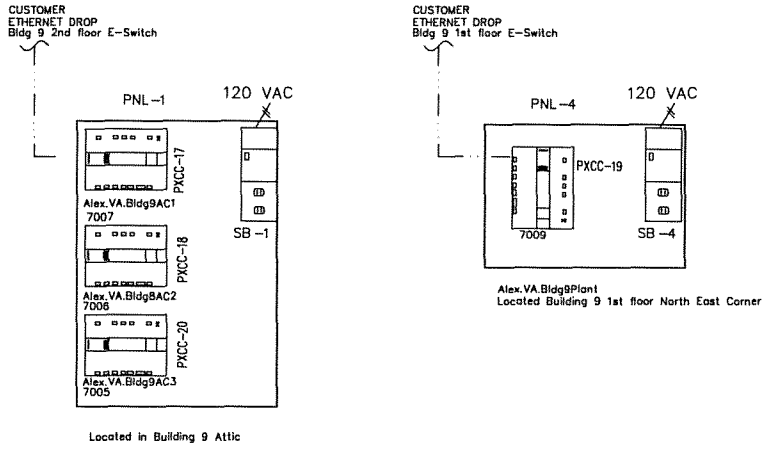

REVISION HISTORY

1	4/30/2012	DMP	AS BUILT DRAWING

SIEMENS

SIEMENS INDUSTRIES INC.
SBT

104 ANNONCE STREET
LAFAYETTE, LA 70507
U.S.A.
Phone: 337-233-7431
Fax: 337-233-7518

VA MEDICAL CTR RETRO
ALEXANDRIA, LA

ENGINEER	DRAFTER	CHECKED BY	INITIAL RELEASE	LAST EDIT DATE
			05/01/11	04/30/12

BLDG 1: RISER

440P-081912
0

B1

© COPYRIGHT 1994-12 SIEMENS INDUSTRIES INC. All Rights Reserved

C:\JOBS\JOBS\ALEXJOBS\VA-ALEXANDRIA(DORYSVERSION-40111)\MDT\BLDG 1 RISER.dwg

INSTALLATION NOTES:

1. ENSURE DEVICE IS WIRED TO SAFETY CIRCUIT OF FAN/UNIT.
2. NEW DEVICE.
3. EXISTING DEVICE

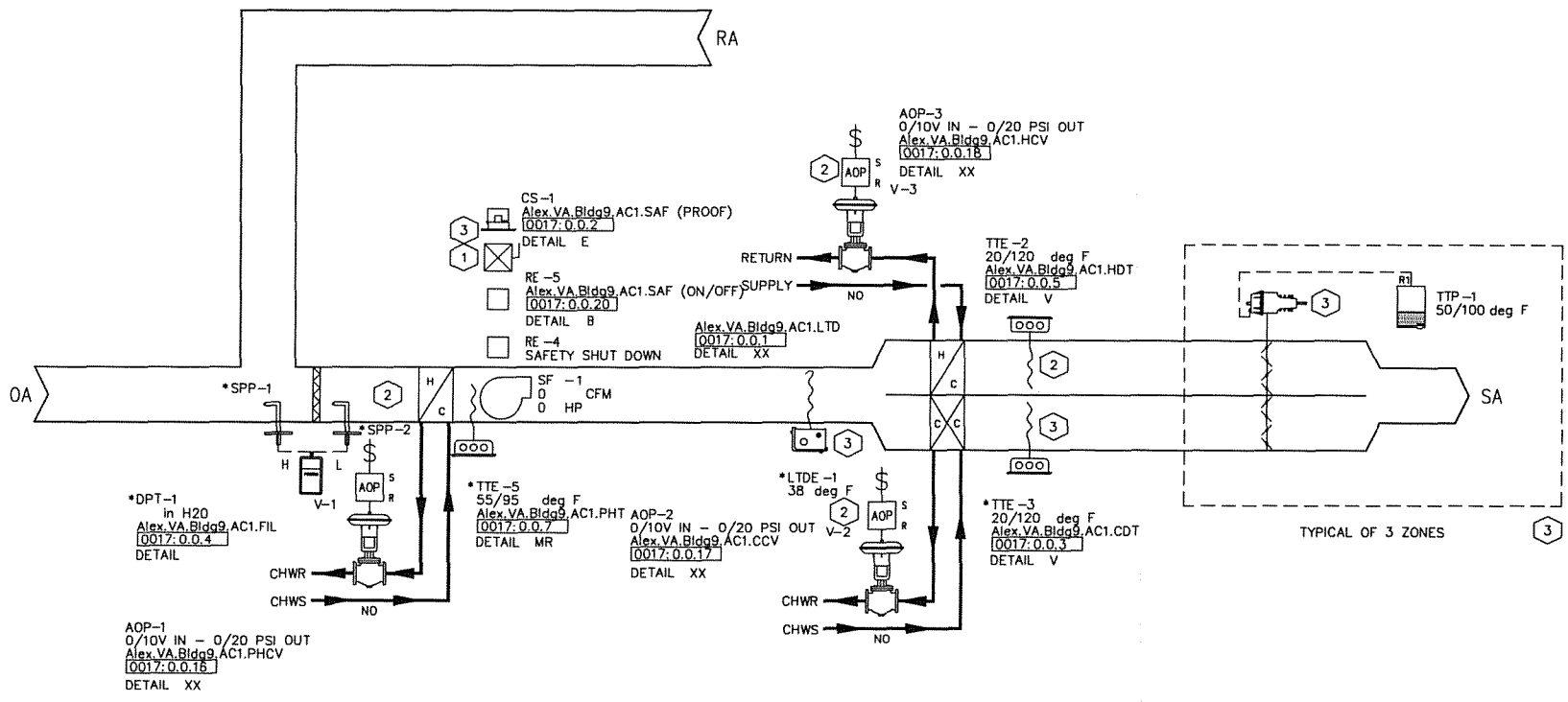

REF#	FIELD PANEL NAME	FIELD PANEL NODE NAME
0017	Alex.VA.Bldg9AC1_7007	Alex.VA.Bldg9AC1

REVISION HISTORY

1	4/30/2012	DMP	AS BUILT DRAWING

SIEMENS

SIEMENS INDUSTRIES INC.
SBT

104 ANNONCE STREET
LAFAYETTE, LA 70507
U.S.A.
Phone: 337-233-7431
Fax: 337-233-7516

VA MEDICAL CTR RETRO
ALEXANDRIA, LA

ENGINEER	DRAFTER	CHECKED BY	INITIAL RELEASE	LAST EDIT DATE
			05/01/11	04/25/12

BLDG 9: AC-1

44OP-081912

900

© COPYRIGHT 1994-12 SIEMENS INDUSTRIES INC. All Rights Reserved

C:\JOBS\JOBS\ALEXJOBS\VA-ALEXANDRIA(DORYSVERSION-40111)\MDT\BLDG 9 AC-1.dwg

Control Device	Qty	Product Number	Manufacturer	Document Number	Description
Field Mounted Devices					
AE 2	1	GCA161.1U	SIEMENS	154001	MOD(V) SR,24V, MED.
AOP 1-2	2	545-113	SIEMENS	149 277	AOP -TRANSDUCER(SHORT BRACKET)
AOP 3	1	PXP23LG	ACT	1002cut025	TRANSDUCR E/P 1400 SCIM IN/OUT
CS 1	1	H609	VERIS	1006cut016	Current Switch,Split-Core,Adj,N.O.,120V
D					SEE DAMPER SUBMITTAL
ES 1	1	PK-1200	REED	0401cut001	DAMPER END SW,BLADE ACTUATED
RE 4-5	2	RIBU1C	FUNCTIONAL DEVICES	1208cut013	RIB 120VAC 24VAC/DC SPDT
SF 1	1	N/A	N/A	N/A	N/A
TTE 1-2	2	544-342-24	SIEMENS	149261	FLEX AVER SNSR, PT 1K OHM, 24FT PROBE
TTP 1	1	184-0340	SIEMENS	155 077	TT184 TEMP XMTR,ROOM,50/100
V					SEE VALVE SUBMITTAL

The constant volume air handling unit consists of a mixed air section with outdoor air damper, pre-filter, pre-heat coil, hot water hot deck heating coil, chilled water cold deck cooling coil, supply fan and multi-zone dampers. The unit is DDC controlled using electric actuation.

The air handling unit is scheduled for automatic operation on a time of day basis for Occupied and Unoccupied modes. Within the Occupied mode, the system can enter the Warm-Up mode when the space temperature is below set point or the Cool-Down mode when the space temperature is above set point. The system stays in the Warm-Up or Cool-Down mode until the mode set point is satisfied. Within the Unoccupied mode, Night Heating is available when the space temperature drops below 65 degrees F (18 degrees C). The latest start time is the scheduled occupancy for the space.

The air handling unit operates in Warm-Up, Cool-Down, Occupied, Unoccupied, Night Heating and Safety modes as follows (All suggested set points and settings are adjustable.):

Warm-Up
The supply fan starts. The outside air damper is closed and the preheat coil and cold deck cooling coil valve remain closed. The hot deck heating coil valve modulates to maintain the hot deck supply air temperature set point. If time reaches the latest start time during the Warm-Up mode, the outdoor air damper opens to its minimum position. The system is prevented from entering the Warm-Up mode more than once per day.

Cool-Down
The supply fan starts. The hot deck heating coil valve remains closed. The cold deck cooling coil valve modulates to maintain the cold deck supply air temperature set point. The outside air damper is closed. If time reaches the latest start time during the Cool-Down mode, the outdoor air damper opens. The system is prevented from entering the Cool-Down mode more than once per day.

Occupied
The supply air temperature set point is reset based on the room temperature set point.

The fan starts or continues to run and the unit is controlled as follows:

The pre-heat coil modulates to maintain a discharge pressure of 60 deg F, adjustable.

The hot deck heating coil valve modulates to maintain the hot deck supply air temperature set point.

The outside air damper is open.

Unoccupied
The fan is off, the cold deck cooling coil valve closes, and the outside air damper is closed. The hot deck heating coil valve opens.

Night Heating
The supply fan starts with the hot deck heating coil valve open to maintain a minimum space temperature of 65 degrees F (18 degrees C) in any of the zones. The cold deck cooling coil valve and preheat valve remain closed and the outside air damper is closed.

Safety
When the OAT is less than 45 degrees F (7 degrees C), the hot deck heating coil valve modulates to maintain the hot deck air temperature at 45 degrees F (7 degrees C) and the cold deck cooling coil valve opens. When the OAT is 45 degrees F (7 degrees C) or above, the hot deck heating coil valve and the cold deck cooling coil valve close. All other dampers and valves position to their normal position after the fan is de-energized.

A low temperature detector in the discharge of the heating coil de-energizes the supply fan when temperatures below 38 degrees F (3 degrees C) are sensed. The hot deck heating coil valve modulates to maintain the hot deck air temperature at 45 degrees F (7 degrees C) and the cold deck cooling coil valve opens. All other dampers and valves position to their normal position after the fan is de-energized.

A current switch is installed in the supply fan starter. The DDC system uses this switch to confirm the fan is in the desired state (i.e. on or off) and generates an alarm if status deviates from DDC start/stop control.

REVISION HISTORY

1	4/30/2012	DMP	AS BUILT DRAWING

SIEMENS

SIEMENS INDUSTRIES INC.
SBT

104 ANNONCE STREET
LAFAYETTE, LA 70507
U.S.A.
PHONE: 337-233-7431
FAX: 337-233-7518

VA MEDICAL CTR RETRO
ALEXANDRIA, LA

ENGINEER	DRAFTER	CHECKED BY	INITIAL RELEASE	LAST EDIT DATE
				04/25/12

BLDG 9: AC-1

44OP-081912
0

900A

© COPYRIGHT 1984-2012 SIEMENS INDUSTRIES INC. ALL RIGHTS RESERVED

C:\JOBS\JOBS\ALEXJOBS\VA-ALEXANDRIA(DORY'SVERSION-40111)\MDT\BLDG 9 AC-1-K00.dwg

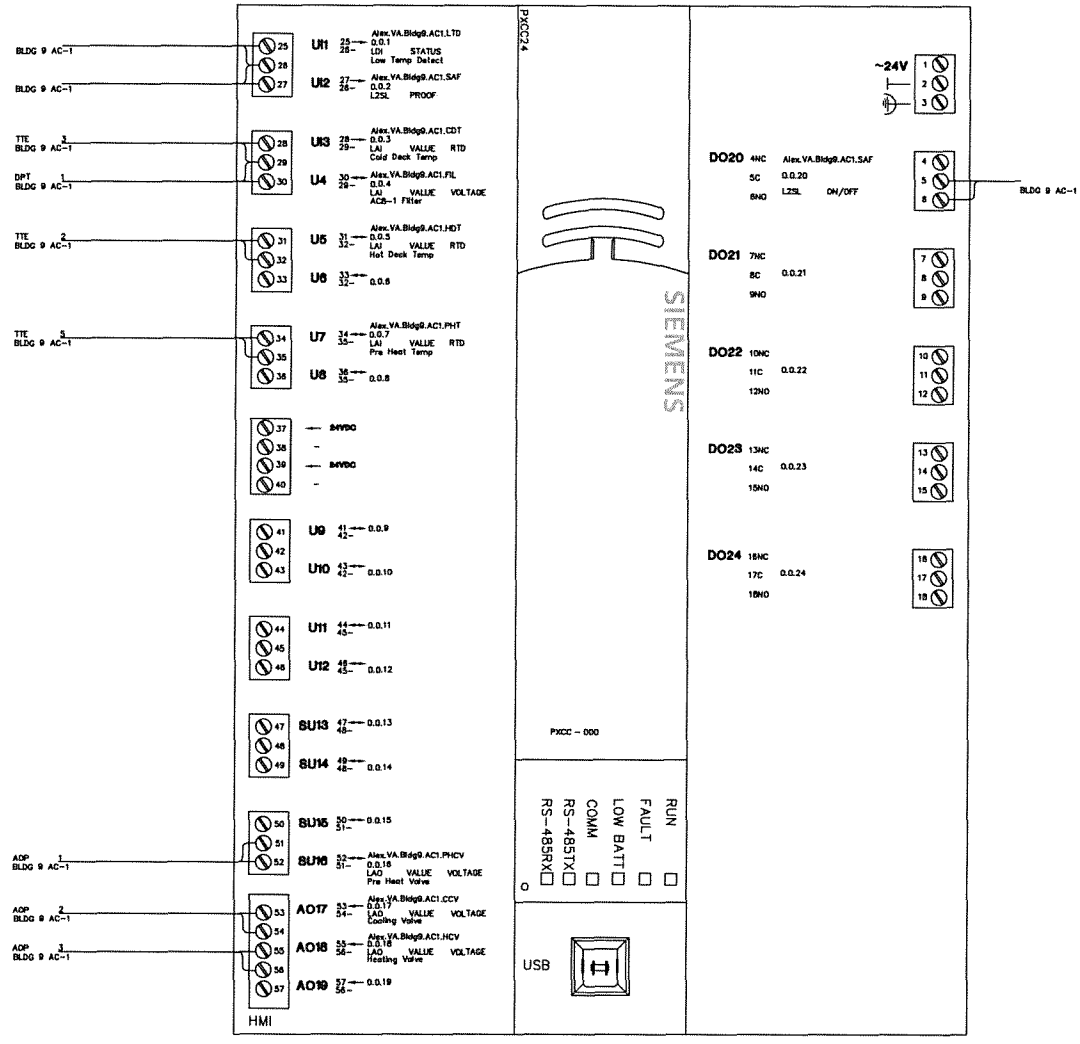

REVISION HISTORY

1	4/30/2012	DMP	AS BUILT DRAWING

SIEMENS

SIEMENS INDUSTRIES INC.
SBT

104 ANNONCE STREET
LAFAYETTE, LA 70507
U.S.A.
Phone: 337-233-7431
Fax: 337-233-7518

VA MEDICAL CTR RETRO
ALEXANDRIA, LA

ENGINEER	DRAFTER	CHECKED BY	INITIAL RELEASE	LAST EDIT DATE
			05/01/11	04/25/12

Bldg 9: AC-1

440P-081912
0

900B

© COPYRIGHT 1994-12 SIEMENS INDUSTRIES INC. All Rights Reserved

C:\JOBS\JOBS\ALEXJOBS\VA-ALEXANDRIA(DORYSVERSION-40111)\MDT\ALEX.VA.BLDG9AC1_7007.DWG

INSTALLATION NOTES:

1. ENSURE DEVICE IS WIRED TO SAFETY CIRCUIT OF FAN/UNIT.
2. NEW DEVICE.
3. EXISTING DEVICE

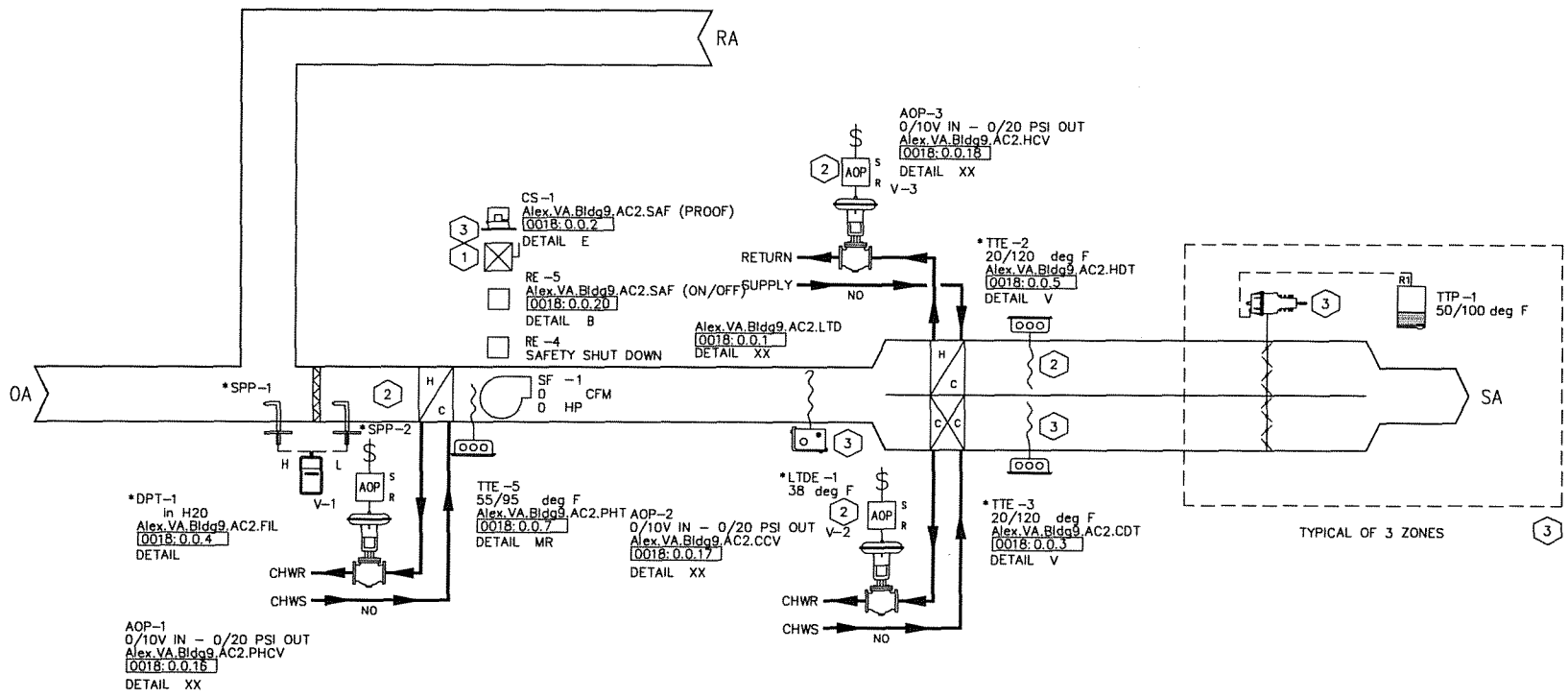

REF#	FIELD PANEL NAME	FIELD PANEL NODE NAME
0018	Alex.VA.Bldg9AC2_7006	Alex.VA.Bldg9AC2

REVISION HISTORY

1	4/30/2012	DMP	AS BUILT DRAWING

SIEMENS

SIEMENS INDUSTRIES INC.
SBT

104 ANNONCE STREET
LAFAYETTE, LA 70507
U.S.A.
Phone: 337-233-7431
Fax: 337-233-7518

VA MEDICAL CTR RETRO
ALEXANDRIA, LA

ENGINEER	DRAFTER	CHECKED BY	INITIAL RELEASE	LAST EDIT DATE
			05/01/11	04/25/12

BLDG 9: AC-2

440P-081912

901

© COPYRIGHT 2004-12 SIEMENS INDUSTRIES INC. All Rights Reserved

C:\JOBS\JOBS\ALEXJOBS\VA-ALEXANDRIA(DORY'SVERSION-40111)\MDT\BLDG 9 AC-2.DWG

Control Device	Qty	Product Number	Manufacturer	Document Number	Description
Field Mounted Devices					
AE 2	1	GCA161.1U	SIEMENS	154001	MOD(V) SR,24V, MED.
AOP 1	1	PXP23LG	ACT	1002cut025	TRANSDUCR E/P 1400 SCIM IN/OUT
AOP 2-3	2	545-113	SIEMENS	149 277	AOP -TRANSDUCER(SHORT BRACKET)
CS 1	1	H609	VERIS	1006cut016	Current Switch,Split-Core,Adj,N.O.,120V
D					SEE DAMPER SUBMITTAL
ES 1	1	PK-1200	REED	0401cut001	DAMPER END SW,BLADE ACTUATED
RE 4-5	2	RIBU1C	FUNCTIONAL DEVICES	1208cut013	RIB 120VAC 24VAC/DC SPDT
SF 1	1	N/A	N/A	N/A	N/A
TTE 1	1	544-342-24	SIEMENS	149261	FLEX AVER SNSR, PT 1K OHM, 24FT PROBE
TTE 5	1	540-660A	SIEMENS	149 312	TEC RM SNSR-BEIGE
TTP 1	1	184-0340	SIEMENS	155 077	TT184 TEMP XMTR,ROOM,50/100
V					SEE VALVE SUBMITTAL

The constant volume air handling unit consists of a mixed air section with outdoor air damper, pre-filter, pre-heat coil, hot water hot deck heating coil, chilled water cold deck cooling coil, supply fan and multi-zone dampers. The unit is DDC controlled using electric actuation.

The air handling unit is scheduled for automatic operation on a time of day basis for Occupied and Unoccupied modes. Within the Occupied mode, the system can enter the Warm-Up mode when the space temperature is below set point or the Cool-Down mode when the space temperature is above set point. The system stays in the Warm-Up or Cool-Down mode until the mode set point is satisfied. Within the Unoccupied mode, Night Heating is available when the space temperature drops below 65 degrees F (18 degrees C). The latest start time is the scheduled occupancy for the space.

The air handling unit operates in Warm-Up, Cool-Down, Occupied, Unoccupied, Night Heating and Safety modes as follows (All suggested set points and settings are adjustable.):

Warm-Up
The supply fan starts. The outside air damper is closed and the preheat coil and cold deck cooling coil valve remain closed. The hot deck heating coil valve modulates to maintain the hot deck supply air temperature set point. If time reaches the latest start time during the Warm-Up mode, the outdoor air damper opens to its minimum position. The system is prevented from entering the Warm-Up mode more than once per day.

Cool-Down
The supply fan starts. The hot deck heating coil valve remains closed. The cold deck cooling coil valve modulates to maintain the cold deck supply air temperature set point. The outside air damper is closed. If time reaches the latest start time during the Cool-Down mode, the outdoor air damper opens. The system is prevented from entering the Cool-Down mode more than once per day.

Occupied
The supply air temperature set point is reset based on the room temperature set point.

The fan starts or continues to run and the unit is controlled as follows:

The pre-heat coil modulates to maintain a discharge pressure of 60 deg F, adjustable.

The hot deck heating coil valve modulates to maintain the hot deck supply air temperature set point.

The outside air damper is open.

Unoccupied
The fan is off, the cold deck cooling coil valve closes, and the outside air damper is closed. The hot deck heating coil valve opens.

Night Heating
The supply fan starts with the hot deck heating coil valve open to maintain a minimum space temperature of 65 degrees F (18 degrees C) in any of the zones. The cold deck cooling coil valve and preheat valve remain closed and the outside air damper is closed.

Safety
When the OAT is less than 45 degrees F (7 degrees C), the hot deck heating coil valve modulates to maintain the hot deck air temperature at 45 degrees F (7 degrees C) and the cold deck cooling coil valve opens. When the OAT is 45 degrees F (7 degrees C) or above, the hot deck heating coil valve and the cold deck cooling coil valve close. All other dampers and valves position to their normal position after the fan is de-energized.

A low temperature detector in the discharge of the heating coil de-energizes the supply fan when temperatures below 38 degrees F (3 degrees C) are sensed. The hot deck heating coil valve modulates to maintain the hot deck air temperature at 45 degrees F (7 degrees C) and the cold deck cooling coil valve opens. All other dampers and valves position to their normal position after the fan is de-energized.

A current switch is installed in the supply fan starter. The DDC system uses this switch to confirm the fan is in the desired state (i.e. on or off) and generates an alarm if status deviates from DDC start/stop control.

REVISION HISTORY

1	4/30/2012	DMP	AS BUILT DRAWING

SIEMENS

SIEMENS INDUSTRIES INC.
SBT

104 ANNONCE STREET
LAFAYETTE, LA 70507
U.S.A.
PHONE: 337-233-7431
FAX: 337-233-7518

VA MEDICAL CTR RETRO
ALEXANDRIA, LA

ENGINEER	DRAFTER	CHECKED BY	INITIAL RELEASE	LAST EDIT DATE
				04/25/12

BLDG 9: AC-2

440P-081912

901A

© COPYRIGHT 1994-2012 SIEMENS INDUSTRIES INC. ALL RIGHTS RESERVED

C:\JOBS\JOBS\ALEXJOBS\VA-ALEXANDRIA(DORY'SVERSION-40111)\MDT\BLDG 9 AC-2-K00.dwg

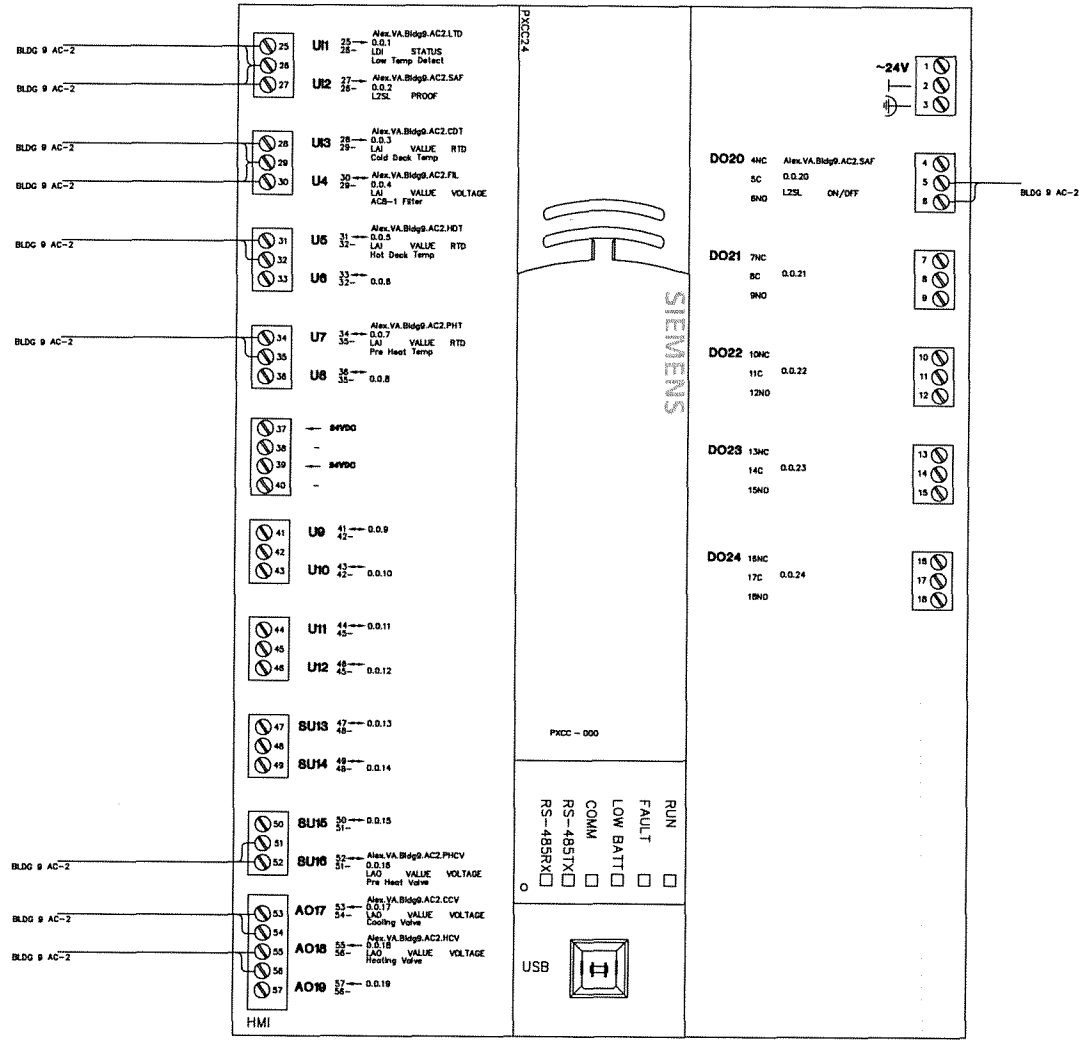

REVISION HISTORY

1	4/30/2012	DMP	AS BUILT DRAWING

SIEMENS

SIEMENS INDUSTRIES INC.
SBT

104 ANNONCE STREET
LAFAYETTE, LA 70507
U.S.A.
Phone: 337-233-7431
Fax: 337-233-7518

VA MEDICAL CTR RETRO
ALEXANDRIA, LA

ENGINEER	DRAFTER	CHECKED BY	INITIAL RELEASE	LAST EDIT DATE
			05/01/11	04/25/12

Bldg 9: AC-2

440P-081912
0

901B

© COPYRIGHT 1994-12 SIEMENS INDUSTRIES INC. All Rights Reserved

C:\JOBS\JOBS\ALEXJOBS\VA-ALEXANDRIA(DORYSVERSION-40111)\MDT\ALEX.VA.BLDG9AC2_7006.DWG

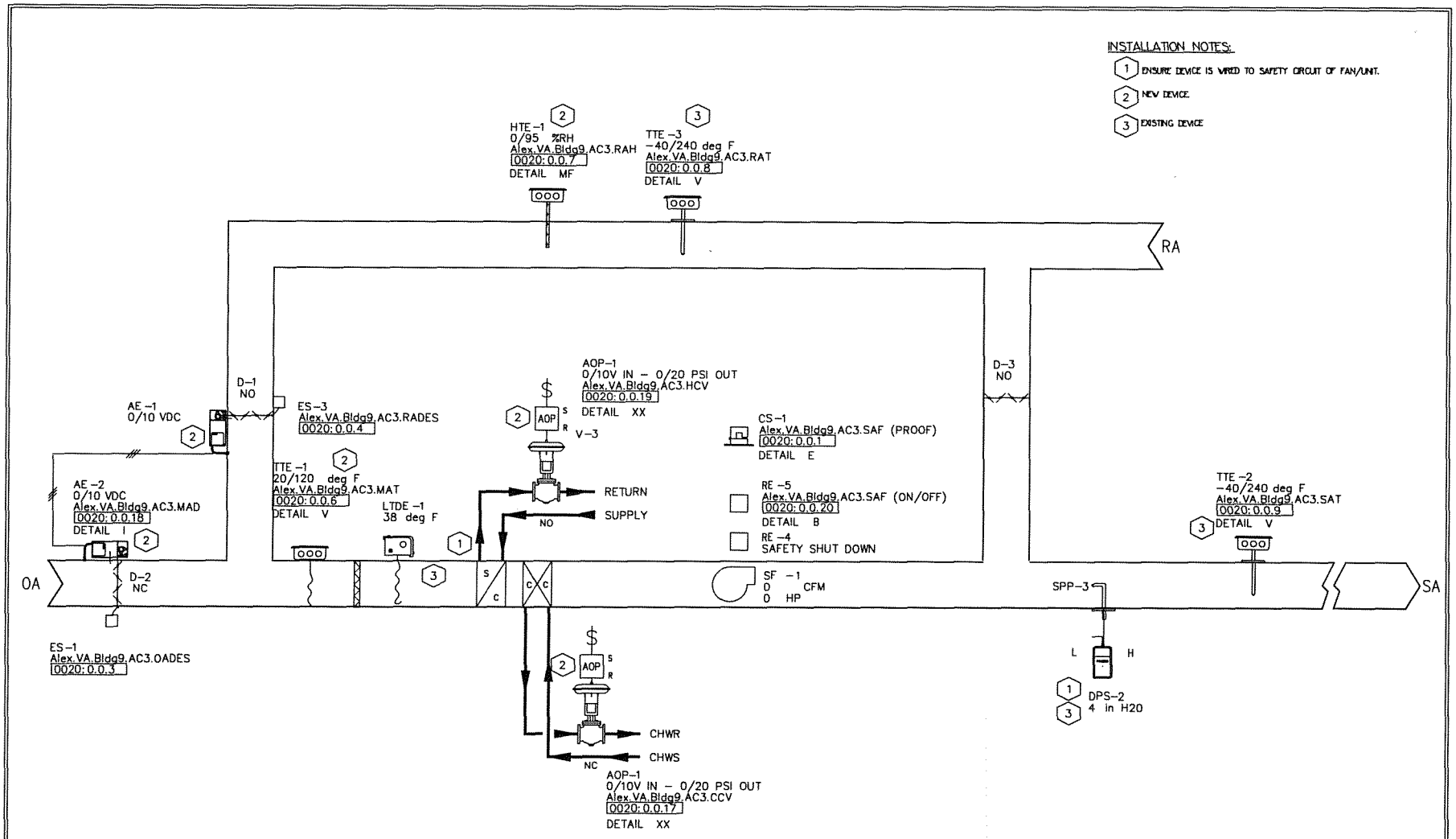

STATIC PRESSURE CONTROLLED BY PNEUMATIC DAMPER, NOT UNDER SIEMENS CONTROL

REF#	FIELD PANEL NAME	FIELD PANEL NODE NAME
0020	Alex.VA.Bldg9AC3_7005	Alex.VA.Bldg9AC3

REVISION HISTORY

1	4/30/2012	DMP	AS BUILT DRAWING

SIEMENS

SIEMENS INDUSTRIES INC.
SBT

104 ANNONCE STREET
LAFAYETTE, LA 70507
U.S.A.
Phone: 337-233-7431
Fax: 337-233-7518

VA MEDICAL CTR RETRO
ALEXANDRIA, LA

ENGINEER	DRAFTER	CHECKED BY	INITIAL RELEASE	LAST EDIT DATE
			05/01/11	04/30/12

BLDG 9: AC-3

44OP-081912

902

© COPYRIGHT 1994-12 SIEMENS INDUSTRIES INC. All Rights Reserved

C:\JOBS\JOBS\ALEXJOBS\VA-ALEXANDRIA(DORY'SVERSION-40111)\MDT\BLDG 9 AC-3.DWG

Control Device	Qty	Product Number	Manufacturer	Document Number	Description
Field Mounted Devices					
AE 1-2	2	GCA161.1U	SIEMENS	154001	MOD(V) SR,24V, MED.
AFS 2-3	2	ZZZ	N/A	N/A	N/A
AOP 1	1	545-113	SIEMENS	149 277	AOP -TRANSDUCER(SHORT BRACKET)
CS 1	1	H609	VERIS	1006cut016	Current Switch,Split-Core,Adj,N.O.,120V
D					SEE DAMPER SUBMITTAL
DPS 2	1	141-0575	SIEMENS	155 052	AIR FLOW SWITCH.05/12 MAN REST
DPT 1	1	141-0574	SIEMENS	155 052	AIR FLOW SWITCH .05-1.0 WC
DPTE 2	1	2641005WD11T1C	SETRA	0608cut003	DP TRAN AIR,1%,5"
ES 1	1	PK-1200	REED	0401cut001	DAMPER END SW,BLADE ACTUATED
ES 3	1	PK-1200	REED	0401cut001	DAMPER END SW,BLADE ACTUATED
HTE 1	1	QFM2101	SIEMENS	149991	SENSOR (DUCT) RH: 4-20MA
LTDE 1	1	134-1504	SIEMENS	155 016	T'STAT, LOW TEMP,15/55,MANUAL
RE 1-2	2	RIBU1C	FUNCTIONAL DEVICES	1208cut013	RIB 120VAC 24VAC/DC SPDT
RE 4-5	2	RIBU1C	FUNCTIONAL DEVICES	1208cut013	RIB 120VAC 24VAC/DC SPDT
SF 1	1	N/A	N/A	N/A	N/A
SPP 1-4	4	269-062	SIEMENS	N/A	PR269 ACCESSORY, SENSING TUBE
TTE 1	1	544-342-24	SIEMENS	149261	FLEX AVER SNSR, PT 1K OHM, 24FT PROBE
TTE 2-3	2	544-339-18	SIEMENS	149261	DCT PT SNSR, PT 1K OHM, (375), 18" PROBE
V					SEE VALVE SUBMITTAL

The variable volume air handling unit consists of a mixed air section with outdoor air and return air dampers, pre-filter, steam coil, chilled water cooling coil and supply fan with variable frequency drive. The unit is DDC controlled using electric actuation.

The air handling unit is scheduled for automatic operation on a time of day basis for Occupied and Unoccupied modes. Within the Occupied mode, the system can enter the Warm-Up mode when the space temperature is below set point or the Cool-Down mode when the space temperature is above set point. The system stays in the Warm-Up or Cool-Down mode until the mode set point is satisfied. Within the Unoccupied mode, Night Heating is available when the space temperature drops below 65 degrees F (18 degrees C). The latest start time is the scheduled occupancy for the space.

The air handling unit operates in Warm-Up, Cool-Down, Occupied, Unoccupied, Night Heating and Safety modes as follows (All suggested set points and settings are adjustable.):

Warm-Up
The supply fan starts. The mixing dampers are positioned for 100% return air and the cooling coil valve remains closed. The heating coil valve modulates to maintain the supply air temperature set point. If time reaches the latest start time during the Warm-Up mode, the outdoor air damper opens to its minimum position. The system is prevented from entering the Warm-Up mode more than once per day.

Cool-Down
The supply fan starts and the heating coil valve remains closed. The cooling coil valve and the mixing dampers modulate to maintain the supply air temperature set point. When the outdoor air dry bulb temperature is above the economizer changeover value, the mixing dampers are positioned for 100% return air. If time reaches the latest start time during the Cool-Down mode, the outdoor air damper opens to its minimum position or is controlled in economizer operation. The system is prevented from entering the Cool-Down mode more than once per day.

Occupied
The fan starts or continues to run and the unit is controlled as follows:

When the outside air dry bulb temperature is below the economizer changeover value, the heating coil valve, cooling coil valve and mixed air dampers modulate in sequence without overlap to maintain the supply air temperature set point with a low limit of 48 degrees F (9 degrees C) at the mixed air sensor. The mixing dampers ramp open slowly to minimize overshooting.

When the outside air dry bulb temperature is above the economizer changeover value, the mixing dampers are placed in the minimum outdoor air position. The heating coil valve and cooling coil valve modulate in sequence without overlap to maintain the supply air temperature set point.

Unoccupied (Normal Off)
The supply fan stops, the cooling coil valve closes and the mixing dampers close to the outdoor air. If the OAT is less than 45 degrees F (7 degrees C), the heating coil valve modulates to maintain the unoccupied supply air set point. If the OAT is 45 degrees F (7 degrees C) or above, the heating coil valve closes.

Night Heating
The supply fan is on with the heating coil valve open to maintain a minimum space temperature of 65 degrees F (18 degrees C). The mixing dampers remain closed to the outdoor air and the cooling coil valve remains closed.

Static Pressure Control
The supply fan variable frequency drive modulates to maintain a constant duct static pressure of 1.5 inches of water as sensed at least two-thirds of the way downstream of the supply fan in the longest or most critical duct. Upon initial startup of the air handling system, the supply fan speed slowly ramps to the desired static pressure set point. Upon shutdown of the air handling system, the supply fan variable frequency drive stops and the speed signal goes to zero speed.

Safety
Discharge high static cutout, smoke detectors in the supply and return air streams and supply fan VFD fault alarms de-energize the supply fan upon activation. When the OAT is less than 45 degrees F (7 degrees C), the heating coil valve modulates to maintain the mixed air temperature at 45 degrees F (7 degrees C). When the OAT is 45 degrees F (7 degrees C) or above, the heating coil valve closes. All other dampers and valves position to their normal position after the fan is de-energized.

A low temperature detector in the discharge of the heating coil de-energizes the supply and return fans when temperatures below 38 degrees F (3 degrees C) are sensed. The heating coil valve modulates to maintain the mixed air

REVISION HISTORY

1	4/30/2012	DMP	AS BUILT DRAWING

SIEMENS

SIEMENS INDUSTRIES INC.
SBT

104 ANNONCE STREET
LAFAYETTE, LA 70507
U.S.A.
PHONE: 337-233-7431
FAX: 337-233-7518

VA MEDICAL CTR RETRO
ALEXANDRIA, LA

ENGINEER	DRAFTER	CHECKED BY	INITIAL RELEASE	LAST EDIT DATE
				04/25/12

BLDG 9: AC-3 BOM & SEQ

440P-081912

902A

© COPYRIGHT 1984-2012 SIEMENS INDUSTRIES INC. ALL RIGHTS RESERVED

C:\JOBS\JOBS\ALEXJOBS\VA-ALEXANDRIA(DORY'SVERSION-40111)\MDT\BLDG 9 AC-3-K00.dwg

temperature at 45 degrees F (7 degrees C). All other dampers and valves position to their normal position after the fans are de-energized.

A current switch is installed on the load side of the supply fan VFD. The DDC system uses the switch to confirm the fan is in the desired state (i.e. on or off) and generates an alarm if status deviates from DDC start/stop control. The DDC system generates a VFD trouble alarm independent from the fan status.

REVISION HISTORY			
1	4/30/2012	DMP	AS BUILT DRAWING

SIEMENS

SIEMENS INDUSTRIES INC.
SBT

104 ANNONCE STREET
LAFAYETTE, LA 70507
U.S.A.
PHONE: 337-233-7431
FAX: 337-233-7518

VA MEDICAL CTR RETRO
ALEXANDRIA, LA

ENGINEER	DRAFTER	CHECKED BY	INITIAL RELEASE	LAST EDIT DATE
				04/25/12

BLDG 9: AC-3 BOM & SEQ

44OP-081912

902B

© COPYRIGHT 1994-2012 SIEMENS INDUSTRIES INC. ALL RIGHTS RESERVED

C:\JOBS\JOBS\ALEXJOBS\VA-ALEXANDRIA(DORY'SVERSION-40111)\MDT\BLDG 9 AC-3-K01.dwg

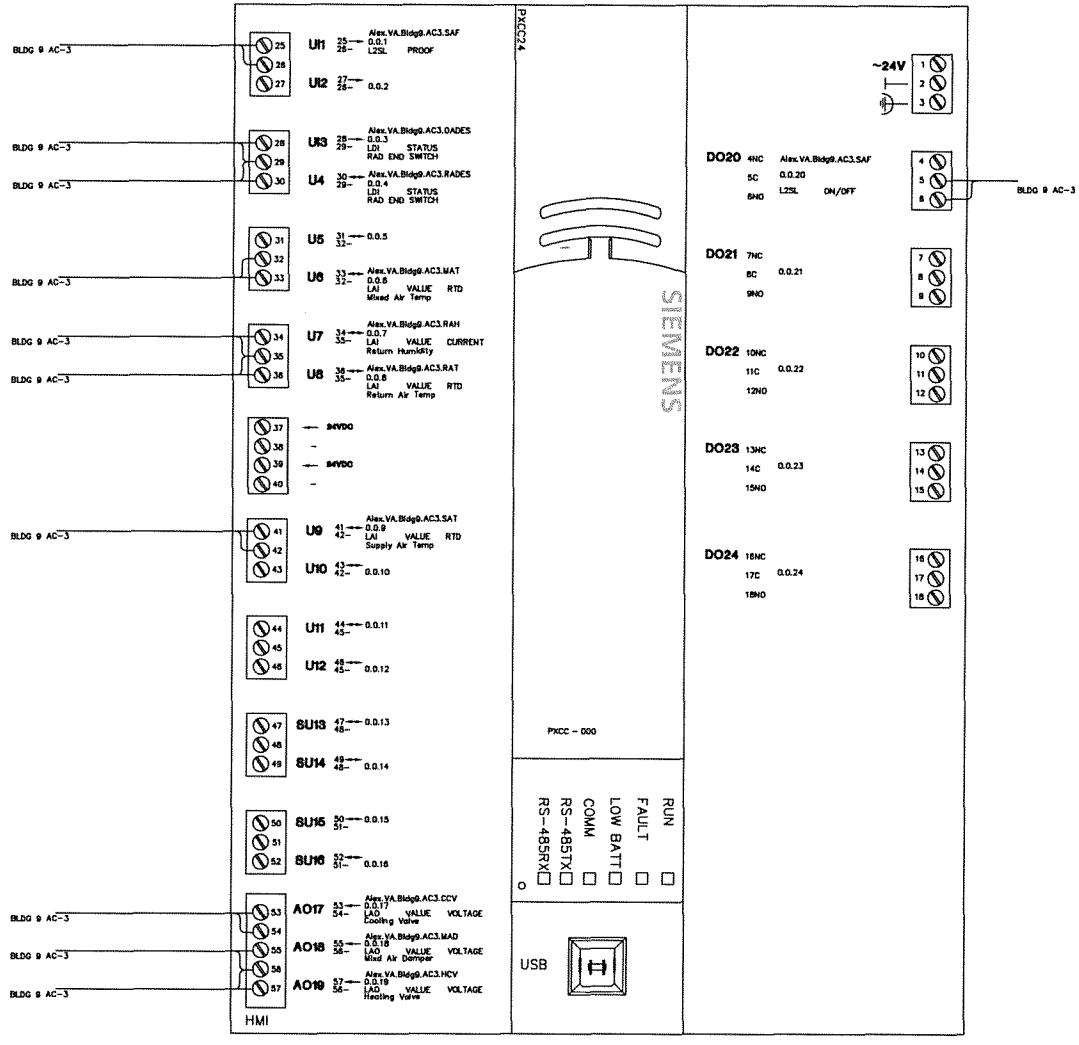

REVISION HISTORY

1	4/30/2012	DMP	AS BUILT DRAWING

SIEMENS

SIEMENS INDUSTRIES INC.
SBT

104 ANNONCE STREET
LAFAYETTE, LA 70507
U.S.A.
Phone: 337-233-7431
Fax: 337-233-7518

VA MEDICAL CTR RETRO
ALEXANDRIA, LA

ENGINEER	DRAFTER	CHECKED BY	INITIAL RELEASE	LAST EDIT DATE
			05/01/11	04/25/12

Bldg 9: AC-3

44OP-081912
0

902C

© COPYRIGHT 2004-12 SIEMENS INDUSTRIES INC. All Rights Reserved

C:\JOBS\JOBS\ALEXJOBS\VA-ALEXANDRIA(DORY'SVERSION-40111)\MDT\ALEX.VA.BLDG9AC3_7005.DWG

INSTALLATION NOTES:

1. SEE PUMP MOTOR STARTER WIRING DETAIL ON DRAWING ? CSR MOUNTED AT STARTER.

XFMR-1
100 VA
LOCATED @ FIELD PANEL

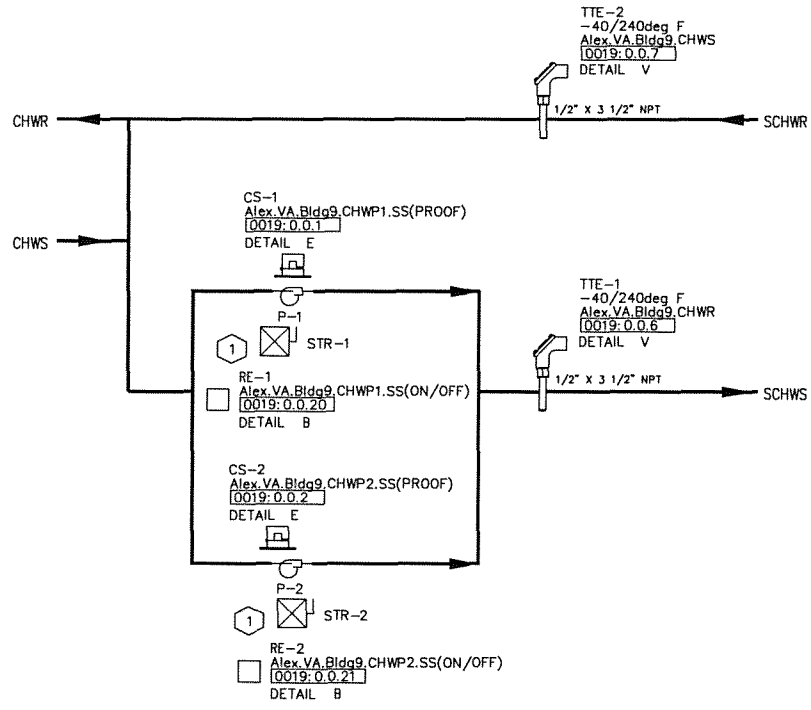

REF #	FIELD PANEL NAME	FIELD PANEL NODE NAME
0019	Alex.VA.Bldg9Plant_7009	Alex.VA.Bldg9Plant

REVISION HISTORY

1	4/30/2012	DMP	AS BUILT DRAWING

SIEMENS

SIEMENS INDUSTRIES INC.
SBT

104 ANNONCE STREET
LAFAYETTE, LA 70507
U.S.A.
Phone: 337-233-7431
Fax: 337-233-7518

VA MEDICAL CTR RETRO
ALEXANDRIA, LA

ENGINEER	DRAFTER	CHECKED BY	INITIAL RELEASE	LAST EDIT DATE
			05/01/11	04/25/12

BLDG 9: CHWPs

440P-081912

903

© COPYRIGHT 1994-12 SIEMENS INDUSTRIES INC. All Rights Reserved

C:\JOBS\JOBS\ALEXJOBS\VA-ALEXANDRIA(DORY'SVERSION-40111)\MDT\BLDG 9 CWP.DWG

Control Device	Qty	Product Number	Manufacturer	Document Number	Description
Field Mounted Devices					
CS 1-2	2	H906	VERIS	1006cut005	Current Switch,Split-Core,Adj,N.C.
P 1	1	N/A	N/A	N/A	N/A
P 2	1	N/A	N/A	N/A	N/A
RE 1-2	2	RIBU1C	FUNCTIONAL DEVICES	1208cut013	RIB 120VAC 24VAC/DC SPDT
STR 1	1	N/A	N/A	N/A	N/A
STR 2	1	N/A	N/A	N/A	N/A
TTE 1-2	2	544-577-25	SIEMENS	149261	IMMWELL SNSR, PT 1K OHM, (375),2.5" LGTH
XFMR 1	1	A7F30008355	N/A	N/A	N/A

REVISION HISTORY

1	4/30/2012	DMP	AS BUILT DRAWING

SIEMENS

SIEMENS INDUSTRIES INC.
SBT

104 ANNONCE STREET
LAFAYETTE, LA 70507
U.S.A.
PHONE: 337-233-7431
FAX: 337-233-7518

VA MEDICAL CTR RETRO
ALEXANDRIA, LA

ENGINEER	DRAFTER	CHECKED BY	INITIAL RELEASE	LAST EDIT DATE
				05/12/11

BLDG 9: CHWPs

440P-081912
0

903A

© COPYRIGHT 1994-2011 SIEMENS INDUSTRIES INC. ALL RIGHTS RESERVED

C:\Jobs\Jobs\AlexJobs\VA-Alexandria(Dory'sVersion-40111)\440P-081912\MDT\BLDG 9 CWP-K00.dwg

INSTALLATION NOTES:

1 ALL DEVICES EXISTING. WILL WIRE EXISTING DEVICES TO NEW SIEMENS CTRL PNL.

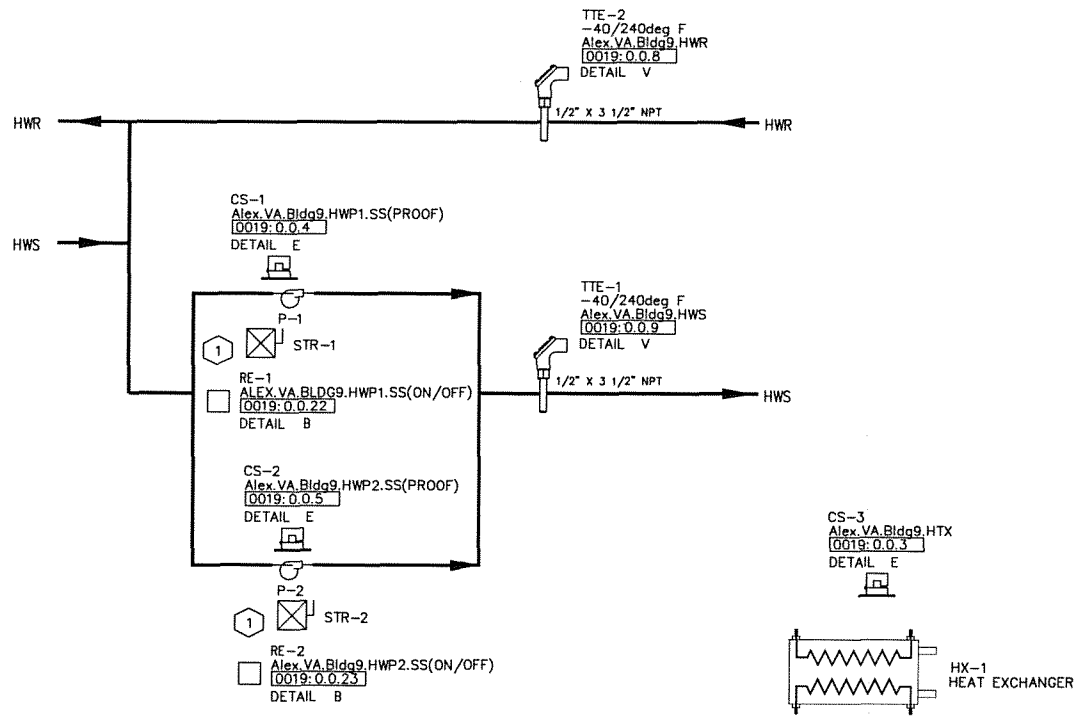

REF#	FIELD PANEL NAME	FIELD PANEL NODE NAME
0019	Alex.VA.Bldg9Plant_7009	Alex.VA.Bldg9Plant

REVISION HISTORY

1	4/30/2012	DMP	AS BUILT DRAWING

SIEMENS

SIEMENS INDUSTRIES INC.
SBT

104 ANNONCE STREET
LAFAYETTE, LA 70507
U.S.A.
Phone: 337-233-7431
Fax: 337-233-7518

VA MEDICAL CTR RETRO
ALEXANDRIA, LA

ENGINEER	DRAFTER	CHECKED BY	INITIAL RELEASE	LAST EDIT DATE
			05/01/11	04/25/12

BLDG 9: HWPs

440P-081912

904

© COPYRIGHT 1994-12 SIEMENS INDUSTRIES INC. All Rights Reserved

C:\JOBS\JOBS\ALEXJOBS\VA-ALEXANDRIA(DORY'SVERSION-40111)\MDT\BLDG 9 HWPS.DWG

Control Device	Qty	Product Number	Manufacturer	Document Number	Description
Field Mounted Devices					
CS 1-3	3	H906	VERIS	1006cut005	Current Switch,Split-Core,Adj,N.C.
P 1	1	N/A	N/A	N/A	N/A
P 2	1	N/A	N/A	N/A	N/A
RE 1-2	2	RIBU1C	FUNCTIONAL DEVICES	1208cut013	RIB 120VAC 24VAC/DC SPDT
STR 1	1	N/A	N/A	N/A	N/A
STR 2	1	N/A	N/A	N/A	N/A
TTE 1-2	2	544-577-25	SIEMENS	149261	IMMWELL SNSR, PT 1K OHM, (375),2.5" LGTH

The secondary hot water system consists of hot water pumps with individual variable frequency drives. The system is DDC controlled with electric actuation.

The system operates as follows (All suggested set points and settings are adjustable.):

Secondary Hot Water Pump Alternation
Secondary hot water pumps alternate to equalize runtime. Selection of the lead pump is evaluated on a weekly basis. The pump with the least runtime is the lead pump. The pump with the most runtime is the lag pump.

Secondary Hot Water Pump Control
When the hot water system is on (indicated by a hot water pump being on), the lead secondary hot water pump starts. The variable frequency drive modulates pump speed to maintain system differential pressure of 20 PSI as sensed near the end of the secondary piping run. If the system differential pressure is below set point and the lead pump is at 100% speed for a time interval of 15 minutes, the lag pump starts. With both pumps on, the variable frequency drives are modulated in unison to maintain system differential pressure. If the system differential is at set point and both pumps are on and at 45% speed for a time interval of 15 minutes the lag pump is stopped.

The DDC system uses current switches to confirm the lead pump is in the desired state (i.e. on or off) and generates an alarm if status deviates from DDC start/stop control. If the lead pump goes into alarm, the lag pump starts.

REVISION HISTORY

1	4/30/2012	DMP	AS BUILT DRAWING

SIEMENS
SIEMENS INDUSTRIES INC.
SBT
104 ANNONCE STREET
LAFAYETTE, LA 70507
U.S.A.
PHONE: 337-233-7431
FAX: 337-233-7518

VA MEDICAL CTR RETRO
ALEXANDRIA, LA

ENGINEER	DRAFTER	CHECKED BY	INITIAL RELEASE	LAST EDIT DATE
				04/25/12

BLDG 9: HWPs BOM

440P-081912

904A

© COPYRIGHT 1994-2012 SIEMENS INDUSTRIES INC. ALL RIGHTS RESERVED

C:\JOBS\JOBS\ALEXJOBS\VA-ALEXANDRIA(DORYSVERSION-40111)\MDT\BLDG 9 HWPs-K00.dwg

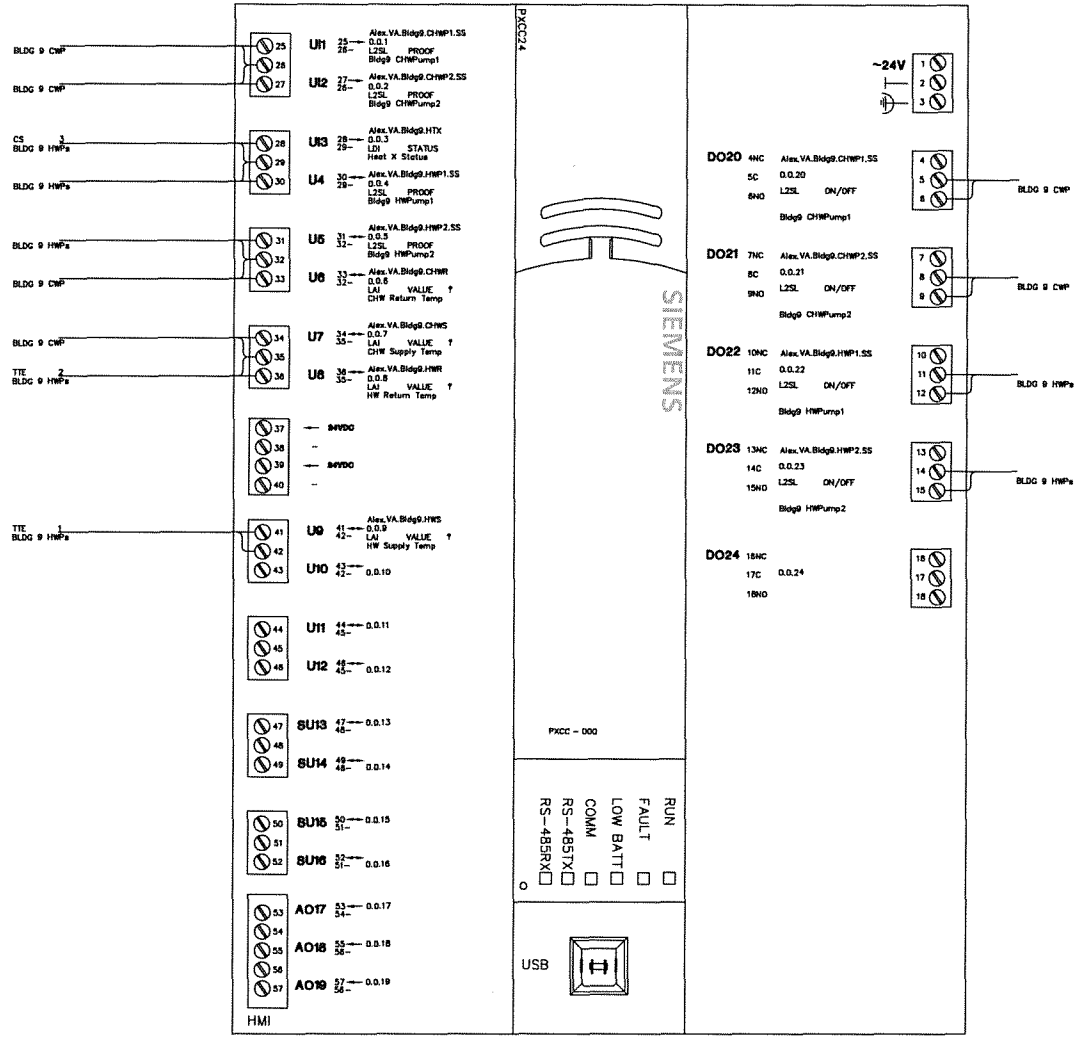

REVISION HISTORY

1	4/30/2012	DMP	AS BUILT DRAWING

SIEMENS

SIEMENS INDUSTRIES INC.
SBT

104 ANNONCE STREET
LAFAYETTE, LA 70507
U.S.A.
Phone: 337-233-7431
Fax: 337-233-7518

VA MEDICAL CTR RETRO
ALEXANDRIA, LA

ENGINEER	DRAFTER	CHECKED BY	INITIAL RELEASE	LAST EDIT DATE
			05/01/11	04/25/12

Bldg 9: Plant

440P-081912

904B

© COPYRIGHT 1994-12 SIEMENS INDUSTRIES INC. All Rights Reserved

C:\JOBS\JOBS\ALEXJOBS\VA-ALEXANDRIA(DORY'SVERSION-40111)\MDT\ALEX.VA.BLDG9PLANT_7009.DWG