Copyright 2015 National Fire Protection Association (NFPA). Licensed, by agreement, for individual use and download on October 23, 2015 to VETERANS AFFAIRS. No other reproduction or transmission in any form permitted without written permission of NFPA. For inquires or to report unauthorized use, contact licensing@nfpa.org.

# NFPA® 25

# Standard for the Inspection, Testing, and Maintenance of Water-Based Fire Protection Systems

## 2014 Edition

Authentic Document
Customer ID
4451761
NFPA®
Click To Verify

NFPA, 1 Batterymarch Park, Quincy, MA 02169-7471
An International Codes and Standards Organization

Copyright 2015 National Fire Protection Association (NFPA). Licensed, by agreement, for individual use and download on October 23, 2015 to VETERANS AFFAIRS. No other reproduction or transmission in any form permitted without written permission of NFPA. For inquires or to report unauthorized use, contact licensing@nfpa.org.

## IMPORTANT NOTICES AND DISCLAIMERS CONCERNING NFPA® DOCUMENTS
## NOTICE AND DISCLAIMER OF LIABILITY CONCERNING THE USE OF NFPA DOCUMENTS

NFPA® codes, standards, recommended practices, and guides ("NFPA Documents"), of which the document contained herein is one, are developed through a consensus standards development process approved by the American National Standards Institute. This process brings together volunteers representing varied viewpoints and interests to achieve consensus on fire and other safety issues. While the NFPA administers the process and establishes rules to promote fairness in the development of consensus, it does not independently test, evaluate, or verify the accuracy of any information or the soundness of any judgments contained in NFPA Documents.

The NFPA disclaims liability for any personal injury, property or other damages of any nature whatsoever, whether special, indirect, consequential or compensatory, directly or indirectly resulting from the publication, use of, or reliance on NFPA Documents. The NFPA also makes no guaranty or warranty as to the accuracy or completeness of any information published herein.

In issuing and making NFPA Documents available, the NFPA is not undertaking to render professional or other services for or on behalf of any person or entity. Nor is the NFPA undertaking to perform any duty owed by any person or entity to someone else. Anyone using this document should rely on his or her own independent judgment or, as appropriate, seek the advice of a competent professional in determining the exercise of reasonable care in any given circumstances.

The NFPA has no power, nor does it undertake, to police or enforce compliance with the contents of NFPA Documents. Nor does the NFPA list, certify, test, or inspect products, designs, or installations for compliance with this document. Any certification or other statement of compliance with the requirements of this document shall not be attributable to the NFPA and is solely the responsibility of the certifier or maker of the statement.

### REMINDER: UPDATING OF NFPA DOCUMENTS

Users of NFPA codes, standards, recommended practices, and guides ("NFPA Documents") should be aware that NFPA Documents may be amended from time to time through the issuance of Tentative Interim Amendments or corrected by Errata. An official NFPA Document at any point in time consists of the current edition of the document together with any Tentative Interim Amendment and any Errata then in effect.

In order to determine whether an NFPA Document has been amended through the issuance of Tentative Interim Amendments or corrected by Errata, visit the Document Information Pages on NFPA's website. The Document Information Pages provide up-to-date, document specific information including any issued Tentative Interim Amendments and Errata.

To access the Document Information Page for a specific NFPA Document go to http://www.nfpa.org/document for a list of NFPA Documents, and click on the appropriate Document number (e.g., NFPA 101). In addition to posting all existing Tentative Interim Amendments and Errata, the Document Information Page also includes the option to sign-up for an "Alert" feature to receive an email notification when new updates and other information are posted regarding the document.

ISBN: 978-145590708-3 (Print)
ISBN: 978-145590733-5 (PDF)

Copyright 2015 National Fire Protection Association (NFPA). Licensed, by agreement, for individual use and download on October 23, 2015 to VETERANS AFFAIRS. No other reproduction or transmission in any form permitted without written permission of NFPA. For inquires or to report unauthorized use, contact licensing@nfpa.org.

# IMPORTANT NOTICES AND DISCLAIMERS CONCERNING NFPA® DOCUMENTS

## ADDITIONAL NOTICES AND DISCLAIMERS

### Updating of NFPA Documents

Users of NFPA codes, standards, recommended practices, and guides ("NFPA Documents") should be aware that these documents may be superseded at any time by the issuance of new editions or may be amended from time to time through the issuance of Tentative Interim Amendments. An official NFPA Document at any point in time consists of the current edition of the document together with any Tentative Interim Amendments and any Errata then in effect. In order to determine whether a given document is the current edition and whether it has been amended through the issuance of Tentative Interim Amendments or corrected through the issuance of Errata, consult appropriate NFPA publications such as the National Fire Codes® Subscription Service, visit the NFPA website at www.nfpa.org, or contact the NFPA at the address listed below.

### Interpretations of NFPA Documents

A statement, written or oral, that is not processed in accordance with Section 6 of the Regulations Governing Committee Projects shall not be considered the official position of NFPA or any of its Committees and shall not be considered to be, nor be relied upon as, a Formal Interpretation.

### Patents

The NFPA does not take any position with respect to the validity of any patent rights referenced in, related to, or asserted in connection with an NFPA Document. The users of NFPA Documents bear the sole responsibility for determining the validity of any such patent rights, as well as the risk of infringement of such rights, and the NFPA disclaims liability for the infringement of any patent resulting from the use of or reliance on NFPA Documents.

NFPA adheres to the policy of the American National Standards Institute (ANSI) regarding the inclusion of patents in American National Standards ("the ANSI Patent Policy"), and hereby gives the following notice pursuant to that policy:

> **NOTICE:** The user's attention is called to the possibility that compliance with an NFPA Document may require use of an invention covered by patent rights. NFPA takes no position as to the validity of any such patent rights or as to whether such patent rights constitute or include essential patent claims under the ANSI Patent Policy. If, in connection with the ANSI Patent Policy, a patent holder has filed a statement of willingness to grant licenses under these rights on reasonable and nondiscriminatory terms and conditions to applicants desiring to obtain such a license, copies of such filed statements can be obtained, on request, from NFPA. For further information, contact the NFPA at the address listed below.

### Law and Regulations

Users of NFPA Documents should consult applicable federal, state, and local laws and regulations. NFPA does not, by the publication of its codes, standards, recommended practices, and guides, intend to urge action that is not in compliance with applicable laws, and these documents may not be construed as doing so.

### Copyrights

NFPA Documents are copyrighted. They are made available for a wide variety of both public and private uses. These include both use, by reference, in laws and regulations, and use in private self-regulation, standardization, and the promotion of safe practices and methods. By making these documents available for use and adoption by public authorities and private users, the NFPA does not waive any rights in copyright to these documents.

Use of NFPA Documents for regulatory purposes should be accomplished through adoption by reference. The term "adoption by reference" means the citing of title, edition, and publishing information only. Any deletions, additions, and changes desired by the adopting authority should be noted separately in the adopting instrument. In order to assist NFPA in following the uses made of its documents, adopting authorities are requested to notify the NFPA (Attention: Secretary, Standards Council) in writing of such use. For technical assistance and questions concerning adoption of NFPA Documents, contact NFPA at the address below.

### For Further Information

All questions or other communications relating to NFPA Documents and all requests for information on NFPA procedures governing its codes and standards development process, including information on the procedures for requesting Formal Interpretations, for proposing Tentative Interim Amendments, and for proposing revisions to NFPA documents during regular revision cycles, should be sent to NFPA headquarters, addressed to the attention of the Secretary, Standards Council, NFPA, 1 Batterymarch Park, P.O. Box 9101, Quincy, MA 02269-9101; email: stds_admin@nfpa.org

For more information about NFPA, visit the NFPA website at www.nfpa.org.

Copyright 2015 National Fire Protection Association (NFPA). Licensed, by agreement, for individual use and download on October 23, 2015 to VETERANS AFFAIRS. No other reproduction or transmission in any form permitted without written permission of NFPA. For inquires or to report unauthorized use, contact licensing@nfpa.org.



Copyright © 2013 National Fire Protection Association®. All Rights Reserved.

**NFPA® 25**

**Standard for the**

# Inspection, Testing, and Maintenance of Water-Based Fire Protection Systems

**2014 Edition**

This edition of NFPA 25, *Standard for the Inspection, Testing, and Maintenance of Water-Based Fire Protection Systems,* was prepared by the Technical Committee on Inspection, Testing, and Maintenance of Water-Based Systems and acted on by NFPA at its June Association Technical Meeting held June 10–13, 2013, in Chicago, IL. It was issued by the Standards Council on August 1, 2013, with an effective date of August 21, 2013, and supersedes all previous editions.

This edition of NFPA 25 was approved as an American National Standard on August 21, 2013.

## Origin and Development of NFPA 25

The first edition of NFPA 25, in 1992, was a collection of inspection, testing, and maintenance provisions that helped ensure the successful operation of water-based fire protection systems. NFPA 25 was developed as an extension of existing documents such as NFPA 13A, *Recommended Practice for the Inspection, Testing, and Maintenance of Sprinkler Systems,* and NFPA 14A, *Recommended Practice for the Inspection, Testing, and Maintenance of Standpipe and Hose Systems,* which have successfully assisted authorities having jurisdiction and property owners with routine inspections of sprinkler systems and standpipes. These documents have since been withdrawn from the NFPA standards system. NFPA 25 became the main document governing sprinkler systems as well as related systems, including underground piping, fire pumps, storage tanks, water spray systems, and foam-water sprinkler systems.

This document provides instruction on how to conduct inspection, testing, and maintenance activities. It also stipulates how often such activities are required to be completed. Requirements are provided for impairment procedures, notification processes, and system restoration. This type of information, where incorporated into a building maintenance program, enhances the demonstrated favorable experience of all water-based fire protection systems.

The 1995 edition incorporated several improvements that reflected the initial experience with the standard. A new chapter was added that addressed obstructions in pipe as well as appropriate corrective actions.

The 1998 edition refined testing requirements and frequencies and provided additional guidance for preplanned impairment programs. The document scope was expanded to include marine systems.

The 2002 edition continued to refine testing frequencies for waterflow devices and evaluation of the annual fire pump test data. This edition also included additional information regarding evaluation and test methods for microbiologically influenced corrosion (MIC).

In the 2008 edition a section permitting performance-based testing was added, providing guidance on alternative means for determining testing frequencies based on system/component failure rates. Component replacement testing tables were introduced in this edition to provide guidance for the appropriate tests to be performed following replacement of system components. Inspection, testing, and maintenance requirements for water mist systems were extracted from NFPA 750 and were inserted into a new chapter. This action consolidated inspection, testing, and maintenance requirements for all water-based fire protection systems into one document.

The 2011 edition further updated testing frequencies based on a growing database of inspection, testing, and maintenance records. In two new annexes information was provided for classification of needed repairs and hazard evaluation. The 2011 edition also added new definitions differentiating the levels of deficiency for determining the priority of repair.

NFPA and National Fire Protection Association are registered trademarks of the National Fire Protection Association, Quincy, Massachusetts 02169.

Copyright 2015 National Fire Protection Association (NFPA). Licensed, by agreement, for individual use and download on October 23, 2015 to VETERANS AFFAIRS. No other reproduction or transmission in any form permitted without written permission of NFPA. For inquires or to report unauthorized use, contact licensing@nfpa.org.



The 2014 edition of NFPA 25 has many significant changes with many specific to the chapter on fire pumps. The operating test requirements were rewritten to consider a baseline weekly test for all pumps with a series of exceptions that would allow for a modified testing frequency. New language was added to address confirmation of pressure recordings and a new fuel quality test for diesel-driven pumps.

Definitions were added for the various frequencies of inspection, testing, and maintenance (ITM) tasks to create a "window" for completion of the task. The concept of internal inspection has been modified to an internal assessment concept, where a performance-based assessment frequency is explicitly addressed. The scope of the Technical Committee on Inspection, Testing, and -Based Systems was updated to specifically address water mist systems. The water mist system was modified such that the extract tags from NFPA 750 have been removed, since the material in this chapter is now in the jurisdiction of NFPA 25.

A new chapter was added to address NFPA 13D systems that are installed outside of one- and two-family homes. The requirements for inspecting antifreeze systems have been updated to include the latest information from the Fire Protection Research Foundation testing on standard spray sprinklers. The table providing examples of classifications for deficiencies and impairments has been relocated from Annex E to Annex A and is attached to the definition of *Deficiency*.

Copyright 2015 National Fire Protection Association (NFPA). Licensed, by agreement, for individual use and download on October 23, 2015 to VETERANS AFFAIRS. No other reproduction or transmission in any form permitted without written permission of NFPA. For inquires or to report unauthorized use, contact licensing@nfpa.org.



## Technical Committee on Inspection, Testing, and Maintenance of Water-Based Systems

**William E. Koffel,** *Chair*
Koffel Associates, Inc., MD [SE]

**Clement J. Adams,** Chubb Group of Insurance Companies, PA [I]
**Gary S. Andress,** Liberty Mutual Property, MA [I]
**Kerry M. Bell,** UL LLC, IL [RT]
**Rick Berwick,** Classic Fire Protection Inc., Canada [IM]
Rep. Canadian Automatic Sprinkler Association
**Michael J. Bosma,** The Viking Corporation, MI [M]
Rep. National Fire Sprinkler Association
**John K. Bouchard,** Chartis Insurance, MA [I]
**Matthew G. Drysdale,** E. I. duPont de Nemours & Company, Inc., DE [U]
Rep. NFPA Industrial Fire Protection Section
**Joshua W. Elvove,** U.S. General Services Administration, CO [U]
**Gary R. Field,** Automatic Protection Systems Corporation, OK [IM]
Rep. National Association of Fire Equipment Distributors
**Russell P. Fleming,** National Fire Sprinkler Association, Inc., NY [IM]
**David B. Fuller,** FM Global, MA [I]
**Greg Garber,** Pittsburg Tank & Tower Inc., VA [M]
**Roland J. Huggins,** American Fire Sprinkler Association, Inc., TX [IM]
**Charles W. Ketner,** National Automatic Sprinkler Fitters LU 669, MD [L]
Rep. United Assn. of Journeymen & Apprentices of the Plumbing & Pipe Fitting Industry
**John Lake,** City of Gainesville, FL [E]
**Peter A. Larrimer,** U.S. Department of Veterans Affairs, PA [U]
**Russell B. Leavitt,** Telgian Corporation, AZ [U]
Rep. The Home Depot
**Kenneth W. Linder,** Swiss Re, CT [I]
**Brock Mitchell,** Extended Stay Hotels, NC [U]
**John D. Munno,** Arthur J. Gallagher Risk Management Services, Inc., OK [U]
Rep. Edison Electric Institute
**Top Myers,** Myers Risk Services, Inc., PA [SE]
**Gayle Pennel,** Aon Fire Protection Engineering, IL [I]
Rep. TC on Fire Pumps
**Peter Placidus Petrus,** Indonesian Fire & Rescue Foundation, Indonesia [E]
**Richard M. Ray,** Cybor Fire Protection Company, IL [IM]
Rep. Illinois Fire Prevention Association
**John F. Saidi,** USDOE Stanford Site Office, CA [U]
**J. William Sheppard,** Sheppard & Associates, LLC, MI [SE]
**Gregory R. Stein,** Tank Industry Consultants, IN [SE]
**Darrell W. Underwood,** Underwood Fire Equipment, Inc., MI [IM]
**Terry L. Victor,** Tyco/SimplexGrinnell, MD [M]
**John Whitney,** Clarke Fire Protection Products, Inc., OH [M]

### Alternates

**Erik H. Anderson,** Koffel Associates, Inc., MD [SE]
(Alt. to W. E. Koffel)
**David L. Asplund,** Reliable Automatic Sprinkler Company, Inc., SC [M]
(Alt. to M. J. Bosma)
**David R. Baron,** Global Fire Protection Company, IL [IM]
(Alt. to R. M. Ray)
**Gregory A. Bartels,** Sprinkler Fitters LU 669-JATC, MD [L]
(Alt. to C. W. Ketner)
**Tracey D. Bellamy,** Telgian Corporation, GA [U]
(Alt. to R. B. Leavitt)
**Patrick Jon Brown,** Tank Industry Consultants, IN [SE]
(Alt. to G. R. Stein)
**Bruce H. Clarke,** XL Global Asset Protection, LLC, NC [I]
(Alt. to K. W. Linder)
**James M. Fantauzzi,** North East Fire Protection Systems Inc., NY [IM]
(Alt. to R. J. Huggins)
**Gordon Farrell,** Tyco Fire Protection Products, RI [M]
(Alt. to T. L. Victor)
**Larry Keeping,** Professional Loss Control, Canada [SE]
(Alt. to J. W. Sheppard)
**Thomas W. LaCorte,** Chubb Group of Insurance Companies, NJ [I]
(Alt. to C. J. Adams)
**George E. Laverick,** UL LLC, IL [RT]
(Alt. to K. M. Bell)
**Wilton Marburger,** Myers Risk Services, Inc., PA [SE]
(Alt. to T. Myers)
**Clayton Norred, Jr.,** Norred Fire Systems, LLC, LA [IM]
(Alt. to G. R. Field)
**Matthew Osburn,** Canadian Automatic Sprinkler Association, Canada [IM]
(Alt. to R. Berwick)
**Damon T. Pietraz,** Underwood Fire Equipment, Inc., MI [IM]
(Alt. to D. W. Underwood)
**Robert B. Popa,** Farmington Fire Department, NM [E]
(Voting Alt. to Farmington F.D. Rep.)
**Ronald Rispoli,** Entergy Corporation, AR [U]
(Alt. to J. D. Munno)
**George W. Stanley,** Wiginton Fire Protection Engineering, Inc., FL [IM]
(Alt. to R. P. Fleming)
**Ralph Tiede,** Liberty Mutual Property, MA [I]
(Alt. to G. S. Andress)
**Allen M. Tsui,** Lawrence Berkeley National Laboratory, CA [U]
(Alt. to J. F. Saidi)

Copyright 2015 National Fire Protection Association (NFPA). Licensed, by agreement, for individual use and download on October 23, 2015 to VETERANS AFFAIRS. No other reproduction or transmission in any form permitted without written permission of NFPA. For inquires or to report unauthorized use, contact licensing@nfpa.org.



**Nonvoting**

**Cecil Bilbo, Jr.,** Academy of Fire Sprinkler Technology, Inc., IL [SE]
**Robert G. Caputo,** Fire & Life Safety America, CA [IM]
Rep. TC on Sprinkler System Installation Criteria
**Rohit Khanna,** U.S. Consumer Product Safety Commission, MD [C]
**Thomas F. Norton,** Norel Service Company, Inc., MA [IM]

**Matthew J. Klaus,** NFPA Staff Liaison

*This list represents the membership at the time the Committee was balloted on the final text of this edition. Since that time, changes in the membership may have occurred. A key to classifications is found at the back of the document.*

NOTE: Membership on a committee shall not in and of itself constitute an endorsement of the Association or any document developed by the committee on which the member serves.

**Committee Scope:** This Committee shall have primary responsibility for documents on inspection, testing, and maintenance of systems utilizing water as a method of extinguishment. These include sprinkler systems (excluding sprinkler systems installed in one- and two-family dwellings and manufactured homes), standpipe and hose systems, fire service piping and appurtenances, fire pumps, water storage tanks, fixed water spray systems, water mist systems, foam-water systems, valves, and allied equipment. This Committee shall also develop procedures for the conduct and reporting of routine system impairments.

Copyright 2015 National Fire Protection Association (NFPA). Licensed, by agreement, for individual use and download on October 23, 2015 to VETERANS AFFAIRS. No other reproduction or transmission in any form permitted without written permission of NFPA. For inquires or to report unauthorized use, contact licensing@nfpa.org.



## Contents


**Chapter 1 Administration** ..... 25– 7
1.1 Scope ..... 25– 7
1.2 Purpose ..... 25– 7
1.3 Application ..... 25– 7
1.4 Units ..... 25– 7

**Chapter 2 Referenced Publications** ..... 25– 7
2.1 General ..... 25– 7
2.2 NFPA Publications ..... 25– 8
2.3 Other Publications ..... 25– 8
2.4 References for Extracts in Mandatory Sections ..... 25– 8

**Chapter 3 Definitions** ..... 25– 8
3.1 General ..... 25– 8
3.2 NFPA Official Definitions ..... 25– 8
3.3 General Definitions ..... 25– 9
3.4 Deluge Foam-Water Sprinkler and Foam-Water Spray Systems Definitions ..... 25– 12
3.5 Valve Definitions ..... 25– 12
3.6 Water-Based Fire Protection System Definitions ..... 25– 12
3.7 ITM Task Frequencies ..... 25– 13

**Chapter 4 General Requirements** ..... 25– 13
4.1 Responsibility of Property Owner or Designated Representative ..... 25– 13
4.2 Manufacturer's Corrective Action ..... 25– 14
4.3 Records ..... 25– 14
4.4 Water Supply Status ..... 25– 14
4.5 Inspection ..... 25– 14
4.6 Testing ..... 25– 14
4.7 Performance-Based Programs ..... 25– 14
4.8 Maintenance ..... 25– 14
4.9 Safety ..... 25– 15

**Chapter 5 Sprinkler Systems** ..... 25– 15
5.1 General ..... 25– 15
5.2 Inspection ..... 25– 15
5.3 Testing ..... 25– 17
5.4 Maintenance ..... 25– 19
5.5 Component Action Requirements ..... 25– 19

**Chapter 6 Standpipe and Hose Systems** ..... 25– 21
6.1 General ..... 25– 21
6.2 Inspection ..... 25– 21
6.3 Testing ..... 25– 23
6.4 Maintenance ..... 25– 23
6.5 Component Action Requirements ..... 25– 23

**Chapter 7 Private Fire Service Mains** ..... 25– 24
7.1 General ..... 25– 24
7.2 Inspection and Corrective Action ..... 25– 25
7.3 Testing ..... 25– 25
7.4 Maintenance ..... 25– 26
7.5 Component Action Requirements ..... 25– 26

**Chapter 8 Fire Pumps** ..... 25– 27
8.1 General ..... 25– 27
8.2 Inspection ..... 25– 30
8.3 Testing ..... 25– 30
8.4 Reports ..... 25– 33
8.5 Maintenance ..... 25– 33
8.6 Component Replacement Testing Requirements ..... 25– 33

**Chapter 9 Water Storage Tanks** ..... 25– 36
9.1 General ..... 25– 36
9.2 Inspection ..... 25– 36
9.3 Testing ..... 25– 38
9.4 Maintenance ..... 25– 38
9.5 Automatic Tank Fill Valves ..... 25– 38
9.6 Component Action Requirements ..... 25– 38

**Chapter 10 Water Spray Fixed Systems** ..... 25– 39
10.1 General ..... 25– 39
10.2 Inspection and Maintenance Procedures ..... 25– 39
10.3 Operational Tests ..... 25– 42
10.4 Ultra-High-Speed Water Spray System (UHSWSS) Operational Tests ..... 25– 42
10.5 Component Action Requirements ..... 25– 43

**Chapter 11 Foam-Water Sprinkler Systems** ..... 25– 43
11.1 General ..... 25– 43
11.2 Inspection ..... 25– 45
11.3 Operational Tests ..... 25– 46
11.4 Maintenance ..... 25– 47
11.5 Component Action Requirements ..... 25– 48

**Chapter 12 Water Mist Systems** ..... 25– 50
12.1 Inspection and Testing. ..... 25– 50
12.2 Maintenance. ..... 25– 53
12.3 Training ..... 25– 53

**Chapter 13 Valves, Valve Components, and Trim** ..... 25– 53
13.1 General ..... 25– 53
13.2 General Provisions ..... 25– 55
13.3 Control Valves in Water-Based Fire Protection Systems ..... 25– 55
13.4 System Valves ..... 25– 56
13.5 Pressure-Reducing Valves and Relief Valves ..... 25– 59
13.6 Backflow Prevention Assemblies ..... 25– 60
13.7 Fire Department Connections ..... 25– 60
13.8 Component Testing Requirements ..... 25– 60

Copyright 2015 National Fire Protection Association (NFPA). Licensed, by agreement, for individual use and download on October 23, 2015 to VETERANS AFFAIRS. No other reproduction or transmission in any form permitted without written permission of NFPA. For inquires or to report unauthorized use, contact licensing@nfpa.org.



**Chapter 14 Internal Piping Condition and Obstruction Investigation** ..... **25–** 63
14.1 General ..... **25–** 63
14.2 Assessment of Internal Condition of Piping. ..... **25–** 63
14.3 Obstruction Investigation and Prevention ..... **25–** 63
14.4 Ice Obstruction ..... **25–** 63

**Chapter 15 Impairments** ..... **25–** 63
15.1 General ..... **25–** 63
15.2 Impairment Coordinator ..... **25–** 64
15.3 Tag Impairment System ..... **25–** 64
15.4 Impaired Equipment ..... **25–** 64
15.5 Preplanned Impairment Programs ..... **25–** 64
15.6 Emergency Impairments ..... **25–** 64
15.7 Restoring Systems to Service ..... **25–** 64

**Chapter 16 Special Requirements from Other NFPA Documents** ..... **25–** 64
16.1 General ..... **25–** 64
16.2 Small Residential Board and Care Occupancies ..... **25–** 64

**Annex A Explanatory Material** ..... **25–** 65

**Annex B Forms for Inspection, Testing, and Maintenance** ..... **25–**112

**Annex C Possible Causes of Pump Troubles** ..... **25–**112

**Annex D Obstruction Investigation** ..... **25–**115

**Annex E Hazard Evaluation Form** ..... **25–**123

**Annex F Informational References** ..... **25–**127

**Index** ..... **25–**129

Copyright 2015 National Fire Protection Association (NFPA). Licensed, by agreement, for individual use and download on October 23, 2015 to VETERANS AFFAIRS. No other reproduction or transmission in any form permitted without written permission of NFPA. For inquires or to report unauthorized use, contact licensing@nfpa.org.



# NFPA 25

## Standard for the

# Inspection, Testing, and Maintenance of Water-Based Fire Protection Systems

## 2014 Edition

***IMPORTANT NOTE: This NFPA document is made available for use subject to important notices and legal disclaimers. These notices and disclaimers appear in all publications containing this document and may be found under the heading "Important Notices and Disclaimers Concerning NFPA Documents." They can also be obtained on request from NFPA or viewed at www.nfpa.org/disclaimers.***

NOTICE: An asterisk (*) following the number or letter designating a paragraph indicates that explanatory material on the paragraph can be found in Annex A.

Changes other than editorial are indicated by a vertical rule beside the paragraph, table, or figure in which the change occurred. These rules are included as an aid to the user in identifying changes from the previous edition. Where one or more complete paragraphs have been deleted, the deletion is indicated by a bullet (•) between the paragraphs that remain.

A reference in brackets [ ] following a section or paragraph indicates material that has been extracted from another NFPA document. As an aid to the user, the complete title and edition of the source documents for extracts in mandatory sections of the document are given in Chapter 2 and those for extracts in informational sections are given in Annex F. Extracted text may be edited for consistency and style and may include the revision of internal paragraph references and other references as appropriate. Requests for interpretations or revisions of extracted text shall be sent to the technical committee responsible for the source document.

Information on referenced publications can be found in Chapter 2 and Annex F.

## Chapter 1 Administration

**1.1 Scope.** This document establishes the minimum requirements for the periodic inspection, testing, and maintenance of water-based fire protection systems and the actions to undertake when changes in occupancy, use, process, materials, hazard, or water supply that potentially impact the performance of the water-based system are planned or identified.

**1.1.1 Coordination with *NFPA 72* Testing Requirements.** This standard does not address all of the inspection, testing, and maintenance of the electrical components of the automatic fire detection equipment used to activate preaction and deluge systems that are addressed by *NFPA 72, National Fire Alarm and Signaling Code*.

**1.1.1.1** The inspection, testing, and maintenance required by this standard and *NFPA 72, National Fire Alarm and Signaling Code*, shall be coordinated so that the system operates as intended.

**1.1.1.2*** All inspections, testing, and maintenance required by *NFPA 72* shall conform to *NFPA 72*, and all inspections, testing, and maintenance required by this standard shall conform to this standard.

**1.1.2 Types of Systems.**

**1.1.2.1** The types of systems addressed by this standard include, but are not limited to, sprinkler, standpipe and hose, fixed water spray, private fire hydrants, water mist, and foam water.

**1.1.2.2** Water supplies that are part of these systems, such as private fire service mains and appurtenances, fire pumps and water storage tanks, and valves that control system flow, are also included in this standard.

**1.1.3*** This standard addresses the operating condition of fire protection systems as well as impairment handling and reporting and applies to fire protection systems that have been properly installed in accordance with generally accepted practice.

**1.1.3.1*** This standard does not require the inspector to verify the adequacy of the design of the system.

**1.1.4*** Corrective action needed to ensure that a system operates in a satisfactory manner shall be in accordance with this standard unless this standard specifically refers to an appropriate installation standard.

**1.1.5** This standard shall not apply to sprinkler systems designed, installed, and maintained in accordance with NFPA 13D, *Standard for the Installation of Sprinkler Systems in One- and Two-Family Dwellings and Manufactured Homes*.

**1.2* Purpose.**

**1.2.1** The purpose of this document is to provide requirements that ensure a reasonable degree of protection for life and property from fire through minimum inspection, testing, and maintenance methods for water-based fire protection systems.

**1.2.2** In those cases where it is determined that an existing situation involves a distinct hazard to life or property, the authority having jurisdiction shall be permitted to require inspection, testing, and maintenance methods in excess of those required by the standard.

**1.3* Application.**

**1.3.1** It is not the intent of this document to limit or restrict the use of other inspection, testing, or maintenance programs that provide an equivalent level of system integrity and performance to that detailed in this document.

**1.3.2** The authority having jurisdiction shall be consulted and approval obtained for such alternative programs.

**1.4* Units.** Metric units of measurement in this standard are in accordance with the modernized metric system known as the International System of Units (SI).

**1.4.1** If a value for measurement as given in this standard is followed by an equivalent value in other units, the first stated shall be regarded as the requirement. A given equivalent value shall be considered to be approximate.

**1.4.2** SI units have been converted by multiplying the quantity by the conversion factor and then rounding the result to the appropriate number of significant digits. Where nominal or trade sizes exist, the nominal dimension has been recognized in each unit.

## Chapter 2 Referenced Publications

**2.1 General.** The documents or portions thereof listed in this chapter are referenced within this standard and shall be considered part of the requirements of this document.

Copyright 2015 National Fire Protection Association (NFPA). Licensed, by agreement, for individual use and download on October 23, 2015 to VETERANS AFFAIRS. No other reproduction or transmission in any form permitted without written permission of NFPA. For inquires or to report unauthorized use, contact licensing@nfpa.org.



**2.2 NFPA Publications.** National Fire Protection Association, 1 Batterymarch Park, Quincy, MA 02169-7471.

NFPA 11, *Standard for Low-, Medium-, and High-Expansion Foam,* 2010 edition.

NFPA 13, *Standard for the Installation of Sprinkler Systems,* 2013 edition.

NFPA 13D, *Standard for the Installation of Sprinkler Systems in One- and Two-Family Dwellings and Manufactured Homes,* 2013 edition.

NFPA 14, *Standard for the Installation of Standpipe and Hose Systems,* 2013 edition.

NFPA 15, *Standard for Water Spray Fixed Systems for Fire Protection,* 2012 edition.

NFPA 16, *Standard for the Installation of Foam-Water Sprinkler and Foam-Water Spray Systems,* 2011 edition.

NFPA 20, *Standard for the Installation of Stationary Pumps for Fire Protection,* 2013 edition.

NFPA 22, *Standard for Water Tanks for Private Fire Protection,* 2013 edition.

NFPA 24, *Standard for the Installation of Private Fire Service Mains and Their Appurtenances,* 2013 edition.

*NFPA 72®, National Fire Alarm and Signaling Code,* 2013 edition.

NFPA *101®, Life Safety Code®,* 2012 edition.

NFPA 110, *Standard for Emergency and Standby Power Systems,* 2013 edition.

NFPA 307, *Standard for the Construction and Fire Protection of Marine Terminals, Piers, and Wharves,* 2011 edition.

NFPA 409, *Standard on Aircraft Hangars,* 2011 edition.

NFPA 1962, *Standard for the Care, Use, Inspection, Service Testing, and Replacement of Fire Hose, Couplings, Nozzles, and Fire Hose Appliances,* 2013 edition.

**2.3 Other Publications.**

**2.3.1 ASTM Publications.** ASTM International, 100 Barr Harbor Drive, P.O. Box C700, West Conshohocken, PA 19428-2959.

ASTM D 975-11b, *Standard Specification for Diesel Fuel Oils,* 2011.

ASTM D 3359, *Standard Test Methods for Measuring Adhesion by Tape Test,* 2008.

ASTM D 6751-11b, *Standard Specification for Biodiesel Fuel Blend Stock (B100) for Middle Distillate Fuels,* 2011.

ASTM D 7462-11, *Standard Test Method for Oxidation Stability of Biodiesel (B100) and Blends of Biodiesel with Middle Distillate Petroleum Fuel (accelerated Method),* 2011.

**2.3.2 HI Publications.** Hydraulic Institute, 6 Campus Drive, First Floor North, Parsippany, NJ 07054-4406.

HI 3.6, *Rotary Pump Tests,* 2010..

**2.3.3 Other Publications.**

*Merriam-Webster's Collegiate Dictionary,* 11th edition, Merriam-Webster, Inc., Springfield, MA, 2003.

**2.4 References for Extracts in Mandatory Sections.**

NFPA 11, *Standard for Low-, Medium-, and High-Expansion Foam,* 2010 edition.

NFPA 13, *Standard for the Installation of Sprinkler Systems,* 2013 edition.

NFPA 14, *Standard for the Installation of Standpipe and Hose Systems,* 2013 edition.

NFPA 15, *Standard for Water Spray Fixed Systems for Fire Protection,* 2012 edition.

NFPA 16, *Standard for the Installation of Foam-Water Sprinkler and Foam-Water Spray Systems,* 2011 edition.

NFPA 20, *Standard for the Installation of Stationary Pumps for Fire Protection,* 2013 edition.

NFPA 24, *Standard for the Installation of Private Fire Service Mains and Their Appurtenances,* 2013 edition.

NFPA 96, *Standard for Ventilation Control and Fire Protection of Commercial Cooking Operations,* 2014 edition.

NFPA *101®, Life Safety Code®,* 2012 edition.

NFPA 110, *Standard for Emergency and Standby Power Systems,* 2013 edition.

NFPA 750, *Standard on Water Mist Fire Protection Systems,* 2010 edition.

NFPA 820, *Standard for Fire Protection in Wastewater Treatment and Collection Facilities,* 2012 edition.

NFPA 1141, *Standard for Fire Protection Infrastructure for Land Development in Wildland, Rural, and Suburban Areas,* 2012 edition.

NFPA 1911, *Standard for the Inspection, Maintenance, Testing, and Retirement of In-Service Automotive Fire Apparatus,* 2012 edition.

## Chapter 3 Definitions

**3.1 General.** The definitions contained in this chapter shall apply to the terms used in this standard. Where terms are not defined in this chapter or within another chapter, they shall be defined using their ordinarily accepted meanings within the context in which they are used. *Merriam-Webster's Collegiate Dictionary,* 11th edition, shall be the source for the ordinarily accepted meaning.

**3.2 NFPA Official Definitions.**

**3.2.1* Approved.** Acceptable to the authority having jurisdiction.

**3.2.2* Authority Having Jurisdiction (AHJ).** An organization, office, or individual responsible for enforcing the requirements of a code or standard, or for approving equipment, materials, an installation, or a procedure.

**3.2.3* Listed.** Equipment, materials, or services included in a list published by an organization that is acceptable to the authority having jurisdiction and concerned with evaluation of products or services, that maintains periodic inspection of production of listed equipment or materials or periodic evaluation of services, and whose listing states that either the equipment, material, or service meets appropriate designated standards or has been tested and found suitable for a specified purpose.

**3.2.4 Shall.** Indicates a mandatory requirement.

**3.2.5 Should.** Indicates a recommendation or that which is advised but not required.

**3.2.6 Standard.** A document, the main text of which contains only mandatory provisions using the word "shall" to indicate requirements and which is in a form generally suitable for mandatory reference by another standard or code or for adoption into law. Nonmandatory provisions are not to be considered a part of the requirements of a standard and shall be located in an appendix, annex, footnote, informational note, or other means as permitted in the *Manual of Style for NFPA Technical Committee Documents.*

Copyright 2015 National Fire Protection Association (NFPA). Licensed, by agreement, for individual use and download on October 23, 2015 to VETERANS AFFAIRS. No other reproduction or transmission in any form permitted without written permission of NFPA. For inquires or to report unauthorized use, contact licensing@nfpa.org.



**3.3 General Definitions.**

**3.3.1 Adjust.** To maintain or regulate, within prescribed limits, by setting the operating characteristics to specified parameters. [**1911,** 2012]

**3.3.2* Alarm Receiving Facility.** The place where alarm or supervisory signals are received.

**3.3.3* Automatic Detection Equipment.** Equipment that automatically detects heat, flame, products of combustion, flammable gases, or other conditions likely to produce fire or explosion and cause other automatic actuation of alarm and protection equipment.

**3.3.4* Automatic Operation.** Operation without human intervention.

**3.3.5 Automatic Transfer Switch.** Self-acting equipment for transferring the connected load from one power source to another power source. [**110,** 2013]

**3.3.6 Clean.** To remove dirt, scale, and debris.

**3.3.7* Deficiency.** For the purposes of inspection, testing, and maintenance of water-based fire protection systems, a condition that will or has the potential to adversely impact the performance of a system or portion thereof but does not rise to the level of an impairment.

**3.3.7.1** ***Critical Deficiency.*** A deficiency that, if not corrected, can have a material effect on the ability of the fire protection system or unit to function as intended in a fire event.

**3.3.7.2** ***Noncritical Deficiency.*** A deficiency that does not have a material effect on the ability of the fire protection system or unit to function in a fire event, but correction is needed to meet the requirements of this standard or for the proper inspection, testing, and maintenance of the system or unit.

**3.3.8 Discharge Device.** A device designed to discharge water or foam-water solution in a predetermined, fixed, or adjustable pattern. Examples include, but are not limited to, sprinklers, spray nozzles, and hose nozzles. [**16,** 2011]

**3.3.9 Double Check Valve Assembly (DCVA).** This assembly consists of two internally loaded check valves, either spring-loaded or internally weighted, installed as a unit between two tightly closing resilient-seated shutoff valves as an assembly, and fittings with properly located resilient-seated test cocks.

**3.3.10 Drain.**

**3.3.10.1** ***Main Drain.*** The primary drain connection located on the system riser.

**3.3.10.2*** ***Sectional Drain.*** A drain located beyond a sectional control valve that drains only a portion of the system.

**3.3.11 Fire Department Connection.** A connection through which the fire department can pump supplemental water into the sprinkler system, standpipe, or other system furnishing water for fire extinguishment to supplement existing water supplies.

**3.3.12* Fire Hydrant.** A valved connection on a water supply system having one or more outlets and that is used to supply hose and fire department pumpers with water. [**1141,** 2012]

**3.3.12.1*** ***Dry Barrel Hydrant (Frostproof Hydrant).*** A type of hydrant with the main control valve below the frost line between the footpiece and the barrel.

**3.3.12.2*** ***Monitor Nozzle Hydrant.*** A hydrant equipped with a monitor nozzle capable of delivering more than 250 gpm (946 L/min).

**3.3.12.3*** ***Wall Hydrant.*** A hydrant mounted on the outside of a wall of a building, fed from interior piping, and equipped with control valves located inside the building that normally are key-operated from the building's exterior.

**3.3.12.4*** ***Wet Barrel Hydrant.*** A type of hydrant that sometimes is used where there is no danger of freezing weather. Each outlet on a wet barrel hydrant is provided with a valved outlet threaded for fire hose. [**24,** 2013]

**3.3.13* Foam Concentrate.** A concentrated liquid foaming agent as received from the manufacturer. [**11,** 2010]

**3.3.14 [Foam] Discharge Device.** A device designed to discharge water or foam-water solution in a predetermined, fixed, or adjustable pattern. Examples include, but are not limited to, sprinklers, spray nozzles, and hose nozzles. [**16,** 2011]

**3.3.15 Hose Connection.** A combination of equipment provided for connection of a hose to the standpipe system that includes a hose valve with a threaded outlet. [**14,** 2013]

**3.3.16* Hose House.** An enclosure located over or adjacent to a hydrant or other water supply designed to contain the necessary hose nozzles, hose wrenches, gaskets, and spanners to be used in fire fighting in conjunction with and to provide aid to the local fire department.

**3.3.17 Hose Nozzle.** A device intended for discharging water for manual suppression or extinguishment of a fire.

**3.3.18 Hose Station.** A combination of a hose rack, hose nozzle, hose, and hose connection. [**14,** 2013]

**3.3.19 Hose Storage Devices.**

**3.3.19.1*** ***Conventional Pin Rack.*** A hose rack where the hose is folded vertically and attached over the pins.

**3.3.19.2*** ***Horizontal Rack.*** A hose rack where the hose is connected to the valve, then stack-folded horizontally to the top of the rack.

**3.3.19.3*** ***Hose Reel.*** A circular device used to store hose.

**3.3.19.4*** ***Semiautomatic Hose Rack Assembly.*** The same as a "conventional" pin rack or hose reel except that, after the valve is opened, a retaining device holds the hose and water until the last few feet are removed.

**3.3.20 Hydrostatic Test.** A test of a closed piping system and its attached appurtenances consisting of subjecting the piping to an increased internal pressure for a specified period of duration to verify system integrity and leak rates. [**24,** 2013]

**3.3.21* Impairment.** A condition where a fire protection system or unit or portion thereof is out of order, and the condition can result in the fire protection system or unit not functioning in a fire event.

**3.3.21.1*** ***Emergency Impairment.*** A condition where a water-based fire protection system or portion thereof is out of order due to an unplanned occurrence, or the impairment is found while performing inspection testing or maintenance activities.

**3.3.21.2** ***Preplanned Impairment.*** A condition where a water-based fire protection system or a portion thereof is out of service due to work planned in advance, such as revisions to the water supply or sprinkler system piping.

Copyright 2015 National Fire Protection Association (NFPA). Licensed, by agreement, for individual use and download on October 23, 2015 to VETERANS AFFAIRS. No other reproduction or transmission in any form permitted without written permission of NFPA. For inquires or to report unauthorized use, contact licensing@nfpa.org.



**3.3.22 Inspect.** See 3.3.23, *Inspection.*

**3.3.23 Inspection.** A visual examination of a system or portion thereof to verify that it appears to be in operating condition and is free of physical damage. [**820,** 2012]

**3.3.24* Inspection, Testing, and Maintenance Service.** A service program provided by a qualified contractor or qualified property owner's representative in which all components unique to the property's systems are inspected and tested at the required times and necessary maintenance is provided.

**3.3.25 Maintenance.** In water-based fire protection systems, work performed to keep equipment operable or to make repairs.

**3.3.26 Manual Operation.** Operation of a system or its components through human action.

**3.3.27 Nozzle.**

**3.3.27.1*** ***Monitor Nozzle.*** A permanently mounted device specifically designed with a high flow rate to provide a far-reaching stream for locations where large amounts of water need to be available without the delay of laying hose lines.

**3.3.27.2*** ***Water Spray Nozzle.*** An open or automatic water discharge device that, when discharging water under pressure, will distribute the water in a specific, directional pattern.

**3.3.28 Orifice Plate Proportioning.** This system utilizes an orifice plate(s) through which passes a specific amount of foam concentrate at a specific pressure drop across the orifice plate(s).

**3.3.29 Performance-Based Program.** Methods and frequencies that have been demonstrated to deliver equivalent or superior levels of performance through quantitative performance-based analysis.

**3.3.30* Pressure-Regulating Device.** A device designed for the purpose of reducing, regulating, controlling, or restricting water pressure. [**14,** 2013]

**3.3.31 Pressure-Restricting Device.** A valve or device designed for the purpose of reducing the downstream water pressure under flowing (residual) conditions only. [**14,** 2013]

**3.3.32* Pressure Vacuum Vent.** A venting device mounted on atmospheric foam concentrate storage vessels to allow for concentrate expansion and contraction and for tank breathing during concentrate discharge or filling.

**3.3.33* Proportioner.**

**3.3.33.1*** ***Bladder Tank Proportioner.*** A system that is similar to a standard pressure proportioner, except the foam concentrate is contained inside a diaphragm bag that is contained inside a pressure vessel.

**3.3.33.2*** ***In-Line Balanced Pressure Proportioner.*** A system that is similar to a standard balanced pressure system, except the pumped concentrate pressure is maintained at a fixed preset value.

**3.3.33.3*** ***Line Proportioner.*** A system that uses a venturi pickup-type device where water passing through the unit creates a vacuum, thereby allowing foam concentrate to be picked up from an atmospheric storage container.

**3.3.33.4*** ***Standard Balanced Pressure Proportioner.*** A system that utilizes a foam concentrate pump where foam concentrate is drawn from an atmospheric storage tank, is pressurized by the pump, and passes back through a diaphragm balancing valve to the storage tank.

**3.3.33.5*** ***Standard Pressure Proportioner.*** A system that uses a pressure vessel containing foam concentrate where water is supplied to the proportioner, which directs an amount of the supply downward onto the contained concentrate, thereby pressurizing the tank.

**3.3.34 Qualified.** A competent and capable person or company that has met the requirements and training for a given field acceptable to the AHJ. [**96,** 2014]

**3.3.35 Rebuild.** To restore working condition by replacement or repair of worn or damaged parts.

**3.3.36 Reduced-Pressure Principle Backflow Prevention Assembly (RPBA).** Two independently acting check valves together with a hydraulically operating, mechanically independent pressure differential relief valve located between the check valves, along with two resilient-seated shutoff valves, all as an assembly, and equipped with properly located test cocks.

**3.3.37 Remove.** To physically take away or eliminate.

**3.3.38 Repair.** Restore to sound working condition or to fix damage.

**3.3.39 Replace.** To remove a component and install a new or equivalent component.

**3.3.40 Sprinkler.**

**3.3.40.1** ***Installation Orientation.*** The following sprinklers are defined according to orientation.

**3.3.40.1.1** ***Concealed Sprinkler.*** A recessed sprinkler with cover plate. [**13,** 2013]

**3.3.40.1.2** ***Flush Sprinkler.*** A sprinkler in which all or part of the body, including the shank thread, is mounted above the lower plane of the ceiling. [**13,** 2013]

**3.3.40.1.3** ***Pendent Sprinkler.*** A sprinkler designed to be installed in such a way that the water stream is directed downward against the deflector. [**13,** 2013]

**3.3.40.1.4** ***Recessed Sprinkler.*** A sprinkler in which all or part of the body, other than the shank thread, is mounted within a recessed housing. [**13,** 2013]

**3.3.40.1.5** ***Sidewall Sprinkler.*** A sprinkler having special deflectors that are designed to discharge most of the water away from the nearby wall in a pattern resembling one-quarter of a sphere, with a small portion of the discharge directed at the wall behind the sprinkler. [**13,** 2013]

**3.3.40.1.6** ***Upright Sprinkler.*** A sprinkler designed to be installed in such a way that the water spray is directed upwards against the deflector. [**13,** 2013]

**3.3.40.2*** ***Control Mode Specific Application (CMSA) Sprinkler.*** A type of spray sprinkler that is capable of producing characteristic large water droplets and that is listed for its capability to provide fire control of specific high-challenge fire hazards. [**13,** 2013]

**3.3.40.3** ***Corrosion-Resistant Sprinkler.*** A sprinkler fabricated with corrosion-resistant material, or with special coatings or platings, to be used in an atmosphere that would normally corrode sprinklers. [**13,** 2013]

Copyright 2015 National Fire Protection Association (NFPA). Licensed, by agreement, for individual use and download on October 23, 2015 to VETERANS AFFAIRS. No other reproduction or transmission in any form permitted without written permission of NFPA. For inquires or to report unauthorized use, contact licensing@nfpa.org.



**3.3.40.4** ***Dry Sprinkler.*** A sprinkler secured in an extension nipple that has a seal at the inlet end to prevent water from entering the nipple until the sprinkler operates. [**13,** 2013]

**3.3.40.5** ***Early Suppression Fast-Response (ESFR) Sprinkler.*** A type of fast-response sprinkler that has a thermal element with an RTI of 50 (meters-seconds)$^{1/2}$ or less and is listed for its capability to provide fire suppression of specific high-challenge fire hazards. [**13,** 2013]

**3.3.40.6** ***Extended Coverage Sprinkler.*** A type of spray sprinkler with maximum coverage areas as specified in Sections 8.8 and 8.9 of NFPA 13, *Standard for the Installation of Sprinkler Systems.* [**13,** 2013]

**3.3.40.7** ***Nozzles.*** A device for use in applications requiring special water discharge patterns, directional spray, or other unusual discharge characteristics. [**13,** 2013]

**3.3.40.8** ***Old-Style/Conventional Sprinkler.*** A sprinkler that directs from 40 percent to 60 percent of the total water initially in a downward direction and that is designed to be installed with the deflector either upright or pendent. [**13,** 2013]

**3.3.40.9** ***Open Sprinkler.*** A sprinkler that does not have actuators or heat-responsive elements. [**13,** 2013]

**3.3.40.10** ***Ornamental/Decorative Sprinkler.*** A sprinkler that has been painted or plated by the manufacturer. [**13,** 2013]

**3.3.40.11** ***Quick-Response Early Suppression (QRES) Sprinkler.*** A type of quick-response sprinkler that has a thermal element with an RTI of 50 (meter-seconds)$^{1/2}$ or less and is listed for its capability to provide fire suppression of specific fire hazards. [**13,** 2013]

**3.3.40.12** ***Quick-Response Extended Coverage Sprinkler.*** A type of quick-response sprinkler that has a thermal element with an RTI of 50 (meter-seconds)$^{1/2}$ or less and complies with the extended protection areas defined in Chapter 8 of NFPA 13, *Standard for the Installation of Sprinkler Systems.* [**13,** 2013]

**3.3.40.13** ***Quick-Response (QR) Sprinkler.*** A type of spray sprinkler that has a thermal element with an RTI of 50 (meter-seconds)$^{1/2}$ or less and is listed as a quick-response sprinkler for its intended use. [**13,** 2013]

**3.3.40.14** ***Residential Sprinkler.*** A type of fast-response sprinkler having a thermal element with an RTI of 50 (meters-seconds)$^{1/2}$ or less, that has been specifically investigated for its ability to enhance survivability in the room of fire origin, and that is listed for use in the protection of dwelling units. [**13,** 2013]

**3.3.40.15** ***Special Sprinkler.*** A sprinkler that has been tested and listed as prescribed in 8.4.8 of NFPA 13, *Standard for the Installation of Sprinkler Systems.* [**13,** 2013]

**3.3.40.16** ***Spray Sprinkler.*** A type of sprinkler listed for its capability to provide fire control for a wide range of fire hazards. [**13,** 2013]

**3.3.40.17** ***Standard Spray Sprinkler.*** A spray sprinkler with maximum coverage areas as specified in Sections 8.6 and 8.7 of NFPA 13, *Standard for the Installation of Sprinkler Systems.* [**13,** 2013]

**3.3.41* Standpipe System.** An arrangement of piping, valves, hose connections, and allied equipment installed in a building or structure, with the hose connections located in such a manner that water can be discharged in streams or spray patterns through attached hose and nozzles, for the purpose of extinguishing a fire, thereby protecting a building or structure and its contents in addition to protecting the occupants. [**14,** 2013]

**3.3.41.1** ***Automatic Standpipe System.*** A standpipe system that is attached to a water supply capable of supplying the system demand and that requires no action other than opening a hose valve to provide water at hose connections.

**3.3.41.2** ***Dry Standpipe.*** A standpipe system designed to have piping contain water only when the system is being utilized.

**3.3.41.3** ***Manual Standpipe.*** Standpipe system that relies exclusively on the fire department connection to supply the system demand.

**3.3.41.4** ***Wet Standpipe System.*** A standpipe system having piping containing water at all times. [**14,** 2013]

**3.3.42 Semiautomatic Dry Standpipe System.** A standpipe system permanently attached to a water supply that is capable of supplying the system demand at all times arranged through the use of a device such as a deluge valve and that requires activation of a remote control device to provide water at hose connections. [**14,** 2013]

**3.3.43 Standpipe System Classes.**

**3.3.43.1** ***Class I System.*** A system that provides 2½ in. (65 mm) hose connections to supply water for use by fire departments. [**14,** 2013]

**3.3.43.2** ***Class II System.*** A system that provides 1½ in. (40 mm) hose stations to supply water for use primarily by trained personnel or by the fire department during initial response. [**14,** 2013]

**3.3.43.3** ***Class III System.*** A system that provides 1½ in. (40 mm) hose stations to supply water for use by trained personnel and 2½ in. (65 mm) hose connections to supply a larger volume of water for use by fire departments. [**14,** 2013]

**3.3.44* Strainer.** A device capable of removing from the water all solids of sufficient size that are obstructing water spray nozzles.

**3.3.45 Supervision.** In water-based fire protection systems, a means of monitoring system status and indicating abnormal conditions.

**3.3.46 Test.** The operation of a device to verify that it is functioning correctly, or the measurement of a system characteristic to determine if it meets requirements.

**3.3.47* Testing.** A procedure used to determine the operational status of a component or system by conducting periodic physical checks, such as waterflow tests, fire pump tests, alarm tests, and trip tests of dry pipe, deluge, or preaction valves.

**3.3.48 Valve Status Test.** Flowing water to verify that valves for a portion of the system are not closed.

**3.3.49* Valve Status Test Connection.** A point in the system where water is discharged for purposes of performing a valve status test.

**3.3.50* Water Spray.** Water in a form having a predetermined pattern, particle size, velocity, and density discharge from specially designed nozzles or devices. [**15,** 2012]

**3.3.51 Water Supply.** A source of water that provides the flows [gal/min (L/min)] and pressures [psi (bar)] required by the water-based fire protection system.

Copyright 2015 National Fire Protection Association (NFPA). Licensed, by agreement, for individual use and download on October 23, 2015 to VETERANS AFFAIRS. No other reproduction or transmission in any form permitted without written permission of NFPA. For inquires or to report unauthorized use, contact licensing@nfpa.org.



**3.3.52 Waterflow Alarm Device.** An attachment to a water-based fire protection system that detects and signals a predetermined waterflow.

**3.4 Deluge Foam-Water Sprinkler and Foam-Water Spray Systems Definitions.**

**3.4.1 Foam-Water Spray System.** A special system that is pipe-connected to a source of foam concentrate and to a water supply. The system is equipped with foam-water spray nozzles for extinguishing agent discharge (foam followed by water or in reverse order) and for distribution over the area to be protected. System operation arrangements parallel those for foam-water sprinkler systems as described in the definition of Foam-Water Sprinkler System. [**16,** 2011]

**3.4.2 Foam-Water Sprinkler System.** A special system that is pipe-connected to a source of foam concentrate and to a water supply. The system is equipped with appropriate discharge devices for extinguishing agent discharge and for distribution over the area to be protected. The piping system is connected to the water supply through a control valve that usually is actuated by operation of automatic detection equipment that is installed in the same areas as the sprinklers. When this valve opens, water flows into the piping system, foam concentrate is injected into the water, and the resulting foam solution discharging through the discharge devices generates and distributes foam. Upon exhaustion of the foam concentrate supply, water discharge follows and continues until shut off manually. Systems can be used for discharge of water first, followed by discharge of foam for a specified period, and then followed by water until manually shut off. Existing deluge sprinkler systems that have been converted to the use of aqueous film-forming foam or film-forming fluoroprotein foam are classified as foam-water sprinkler systems. [**16,** 2011]

**3.5 Valve Definitions.**

**3.5.1* Control Valve.** A valve controlling flow to water-based fire protection systems.

**3.5.2* Deluge Valve.** A water supply control valve intended to be operated by actuation of an automatic detection system that is installed in the same area as the discharge devices.

**3.5.3 Hose Valve.** The valve to an individual hose connection. [**14,** 2013]

**3.5.4 Pressure Control Valve.** A pilot-operated pressure-reducing valve designed for the purpose of reducing the downstream water pressure to a specific value under both flowing (residual) and nonflowing (static) conditions. [**14,** 2013]

**3.5.5 Pressure-Reducing Valve.** A valve designed for the purpose of reducing the downstream water pressure under both flowing (residual) and nonflowing (static) conditions. [**14,** 2013]

**3.5.5.1*** ***Master Pressure-Reducing Valve.*** A pressure-reducing valve installed to regulate pressures in an entire fire protection system and/or standpipe system zone.

**3.5.6 [Pressure] Relief Valve.** A device that allows the diversion of liquid to limit excess pressure in a system. [**20,** 2013]

**3.5.6.1** ***Circulation Relief Valve.*** A valve used to cool a pump by discharging a small quantity of water. This valve is separate from and independent of the main relief valve. [**20,** 2013]

**3.6 Water-Based Fire Protection System Definitions.**

**3.6.1 Combined Standpipe and Sprinkler System.** A system where the water piping services both 2½ in. (65 mm) outlets for fire department use and outlets for automatic sprinklers.

**3.6.2 Fire Pump.** A pump that is a provider of liquid flow and pressure dedicated to fire protection. [**20,** 2013]

**3.6.3* Private Fire Service Main.** Private fire service main, as used in this standard, is that pipe and its appurtenances on private property (1) between a source of water and the base of the system riser for water-based fire protection systems, (2) between a source of water and inlets to foam-making systems, (3) between a source of water and the base elbow of private hydrants or monitor nozzles, and (4) used as fire pump suction and discharge piping, (5) beginning at the inlet side of the check valve on a gravity or pressure tank. [**24,** 2013]

**3.6.4* Sprinkler System.** A system that consists of an integrated network of piping designed in accordance with fire protection engineering standards that includes a water supply source, a water control valve, a waterflow alarm, and a drain and is commonly activated by heat from a fire, discharging water over the fire area. The portion of the sprinkler system above ground is a network of specifically sized or hydraulically designed piping installed in a building, structure, or area, generally overhead, and to which sprinklers are attached in a systematic pattern. The system is commonly activated by heat from a fire and discharges water over the fire area. [**13,** 2013]

**3.6.4.1** ***Antifreeze Sprinkler System.*** A wet pipe system using automatic sprinklers that contains a liquid solution to prevent freezing of the system, intended to discharge the solution upon sprinkler operation, followed immediately by water from a water supply. [**13,** 2013]

**3.6.4.1.1** ***Premixed Antifreeze Solution.*** A mixture of an antifreeze material with water that is prepared and factory-mixed by the manufacturer with a quality control procedure in place that ensures that the antifreeze solution remains homogeneous and that the concentration is as specified. [**13,** 2013]

**3.6.4.2** ***Deluge Sprinkler System.*** A sprinkler system employing open sprinklers or nozzles that are attached to a piping system that is connected to a water supply through a valve that is opened by the operation of a detection system installed in the same areas as the sprinklers or the nozzles. When this valve opens, water flows into the piping system and discharges from all sprinklers or nozzles attached thereto. [**13,** 2013]

**3.6.4.3** ***Dry Pipe Sprinkler System.*** A sprinkler system employing automatic sprinklers that are attached to a piping system containing air or nitrogen under pressure, the release of which (as from the opening of a sprinkler) permits the water pressure to open a valve known as a dry pipe valve, and the water then flows into the piping system and out the opened sprinklers. [**13,** 2013]

**3.6.4.4** ***Marine System.*** A sprinkler system installed on a ship, boat, or other floating structure that takes its supply from the water on which the vessel floats.

**3.6.4.5** ***Preaction Sprinkler System.*** A sprinkler system employing automatic sprinklers that are attached to a piping system that contains air that might or might not be under pressure, with a supplemental detection system installed in the same areas as the sprinklers. [**13,** 2013]

Copyright 2015 National Fire Protection Association (NFPA). Licensed, by agreement, for individual use and download on October 23, 2015 to VETERANS AFFAIRS. No other reproduction or transmission in any form permitted without written permission of NFPA. For inquires or to report unauthorized use, contact licensing@nfpa.org.



**3.6.4.6*** ***Wet Pipe Sprinkler System.*** A sprinkler system employing automatic sprinklers attached to a piping system containing water and connected to a water supply so that water discharges immediately from sprinklers opened by heat from a fire. [**13,** 2013]

**3.6.5 Water Mist System.** A distribution system connected to a water supply or water and atomizing media supplies that is equipped with one or more nozzles capable of delivering water mist intended to control, suppress, or extinguish fires and that has been demonstrated to meet the performance requirements of its listing and [the applicable] standard. [**750,** 2010]

**3.6.6* Water Spray System.** An automatic or manually actuated fixed pipe system connected to a water supply and equipped with water spray nozzles designed to provide a specific water discharge and distribution over the protected surfaces or area. [**15,** 2012]

**3.6.6.1** ***Ultra High-Speed Water Spray System.*** A type of automatic water spray system where water spray is rapidly applied to protect specific hazards where deflagrations are anticipated. [**15,** 2012]

**3.6.7 Water Tank.** A tank supplying water for water-based fire protection systems.

**3.7 ITM Task Frequencies.**

**3.7.1* Frequency.** Minimum and maximum time between events.

**3.7.1.1** ***Daily Frequency.*** Occurring every day.

**3.7.1.2** ***Weekly Frequency.*** Occurring once per calendar week.

**3.7.1.3** ***Monthly Frequency.*** Occurring once per calendar month.

**3.7.1.4** ***Quarterly Frequency.*** Occurring four times per year with a minimum of 2 months and a maximum of 4 months.

**3.7.1.5** ***Semiannual Frequency.*** Occurring twice per year with a minimum of 4 months and a maximum of 8 months.

**3.7.1.6** ***Annual Frequency.*** Occurring once per year with a minimum of 9 months and a maximum of 15 months.

**3.7.1.7** ***Three Years Frequency.*** Occurring once every 36 months with a minimum of 30 months and a maximum of 40 months.

**3.7.1.8** ***Five Years Frequency.*** Occurring once every 60 months with a minimum of 54 months and a maximum of 66 months.

## Chapter 4 General Requirements

**4.1 Responsibility of Property Owner or Designated Representative.**

**4.1.1* Responsibility for Inspection, Testing, Maintenance, and Impairment.** The property owner or designated representative shall be responsible for properly maintaining a water-based fire protection system.

**4.1.1.1*** Inspection, testing, maintenance, and impairment procedures shall be implemented in accordance with those established in this document and in accordance with the manufacturer's instructions.

**4.1.1.2** Inspection, testing, and maintenance shall be performed by qualified personnel.

**4.1.1.3*** Where the property owner or designated representative is not the occupant, the property owner or designated representative shall be permitted to delegate the authority for inspecting, testing, maintenance, and the managing of impairments of the fire protection system to a designated representative.

**4.1.1.4** Where a designated representative has received the authority for inspecting, testing, maintenance, and the managing of impairments, the designated representative shall comply with the requirements identified for the property owner or designated representative throughout this standard.

**4.1.2* Freeze Protection.** The property owner or designated representative shall ensure that water-filled piping is maintained at a minimum temperature of 40°F (4°C) unless an approved antifreeze solution is utilized.

**4.1.2.1** All areas of the building containing water-filled piping that does not have another means of freeze protection shall be maintained at a minimum temperature of 40°F (4°C).

**4.1.2.2** Aboveground water-filled pipes that pass through open areas, cold rooms, passageways, or other areas exposed to temperatures below 40°F (4°C), protected against freezing by insulating coverings, frostproof casings, listed heat tracing systems, or other reliable means, shall be maintained at temperatures between 40°F (4°C) and 120°F (48.9°C).

**4.1.2.3** Where other approved means of freeze protection for water-filled piping as described in 4.1.2.2 are utilized, they shall be inspected, tested, and maintained in accordance with this standard.

**4.1.3* Accessibility.** The property owner or designated representative shall provide ready accessibility to components of water-based fire protection systems that require inspection, testing, and maintenance.

**4.1.4 Notification of System Shutdown or Testing.** The property owner or designated representative shall notify the authority having jurisdiction, the fire department, if required, and the alarm-receiving facility before testing or shutting down a system or its supply.

**4.1.4.1** The notification of system shutdown or test shall include the purpose for the shutdown or test, the system or component involved, the estimated time of shutdown or test, and the expected duration of the shutdown or test.

**4.1.4.2** The authority having jurisdiction, the fire department, and the alarm-receiving facility shall be notified when the system, supply, or component is returned to service or when the test is complete.

**4.1.5* Corrections and Repairs.**

**4.1.5.1*** The property owner or designated representative shall correct or repair deficiencies or impairments that are found during the inspection, test, and maintenance required by this standard.

**4.1.5.2** Corrections and repairs shall be performed by qualified maintenance personnel or a qualified contractor.

**4.1.6* Changes in Occupancy, Use, Process, or Materials.** The property owner or designated representative shall not make changes in the occupancy, the use or process, or the materials used or stored in the building without evaluation of the fire

Copyright 2015 National Fire Protection Association (NFPA). Licensed, by agreement, for individual use and download on October 23, 2015 to VETERANS AFFAIRS. No other reproduction or transmission in any form permitted without written permission of NFPA. For inquires or to report unauthorized use, contact licensing@nfpa.org.



protection systems for their capability to protect the new occupancy, use, or materials.

**4.1.6.1** The evaluation required by 4.1.6 shall not be considered part of the normal inspection, testing, and maintenance required by this standard.

**4.1.6.2** The evaluation shall consider factors that include, but are not limited to, the following:

(1) Occupancy changes such as converting office or production space into warehousing
(2) Process or material changes such as metal stamping to molded plastics
(3) Building revisions such as relocated walls, added mezzanines, and ceilings added below sprinklers
(4) Removal of heating systems in spaces with piping subject to freezing

**4.1.7* Addressing Changes in Hazard.**

**4.1.7.1** Where changes in the occupancy, hazard, water supply, storage commodity, storage arrangement, building modification, or other condition that affects the installation criteria of the system are identified, the property owner or designated representative shall promptly take steps to evaluate the adequacy of the installed system in order to protect the building or hazard in question.

**4.1.7.2** Where the evaluation reveals that the installed system is inadequate to protect the building or hazard in question, the property owner or designated representative shall make the required corrections.

**4.1.7.3** Corrections shall be approved.

**4.1.8 Valve Location.** The location of shutoff valves shall be identified at the system riser or other approved locations.

**4.1.9 Information Sign.**

**4.1.9.1** A permanently marked metal or rigid plastic information sign shall be placed at the system control riser supplying an antifreeze loop, dry system, preaction system, or auxiliary system control valve.

**4.1.9.2** Each sign shall be secured with a corrosion-resistant wire, chain, or other approved means and shall indicate at least the following information:

(1) Location of the area served by the system
(2) Location of auxiliary drains and low-point drains for dry pipe and preaction systems
(3) The presence and location of antifreeze or other auxiliary systems
(4) The presence and location(s) of heat tape

**4.1.10 Impairments.**

**4.1.10.1** Where an impairment to a water-based fire protection system occurs or is identified during inspection, testing, or maintenance activities, the procedures outlined in Chapter 15 shall be followed, including the attachment of a tag to the impaired system.

**4.1.10.2** Where a water-based fire protection system is returned to service following an impairment, the system shall be verified to be working properly by means of an appropriate inspection or test as described in the table "Summary of Component Replacement [Action] Requirements" in the applicable chapters of this document.

**4.2 Manufacturer's Corrective Action.** Manufacturers shall be permitted to make modifications to their own listed product in the field with listed devices that restore the original performance as intended by the listing, where acceptable to the authority having jurisdiction.

**4.3 Records.**

**4.3.1*** Records shall be made for all inspections, tests, and maintenance of the system and its components and shall be made available to the authority having jurisdiction upon request.

**4.3.1.1*** Records shall be permitted to be stored and accessed electronically.

**4.3.2** Records shall indicate the following:

(1) The procedure/activity performed (e.g., inspection, test, or maintenance)
(2) The organization that performed the activity
(3) The required frequency of the activity
(4) The results and date of the activity
(5) The name and contact information of the qualified contractor or owner, including lead person for activity

**4.3.3*** Records shall be maintained by the property owner.

**4.3.4** As-built system installation drawings, hydraulic calculations, original acceptance test records, and device manufacturer's data sheets shall be retained for the life of the system.

**4.3.5** Subsequent records shall be retained for a period of 1 year after the next inspection, test, or maintenance of that type required by the standard.

**4.4 Water Supply Status.** During inspection, testing, and maintenance, water supplies, including fire pumps, shall remain in service unless under constant attendance by qualified personnel or unless impairment procedures in Chapter 15 are followed.

**4.5* Inspection.** System components shall be inspected at intervals specified in the appropriate chapters.

**4.6 Testing.**

**4.6.1** All components and systems shall be tested to verify that they function as intended.

**4.6.2** The frequency of tests shall be in accordance with this standard.

**4.6.3** Fire protection system components shall be restored to full operational condition following testing, including reinstallation of plugs and caps for auxiliary drains and test valves.

**4.6.4*** Test results shall be compared with those of the original acceptance test (if available) and with the most recent test results.

**4.6.5*** When a component or subsystem is adjusted, repaired, reconditioned, or replaced, it shall be tested in accordance with the original acceptance test required for that subsystem or the requirements where specified by the standard.

**4.6.6* Automated Testing. (Reserved)**

**4.7* Performance-Based Programs.** As an alternative means of compliance and where approved by the authority having jurisdiction, components and systems shall be permitted to be inspected, tested, and maintained under a performance-based program.

**4.8* Maintenance.** Maintenance shall be performed to keep the system equipment operable or to make repairs.

Copyright 2015 National Fire Protection Association (NFPA). Licensed, by agreement, for individual use and download on October 23, 2015 to VETERANS AFFAIRS. No other reproduction or transmission in any form permitted without written permission of NFPA. For inquires or to report unauthorized use, contact licensing@nfpa.org.



**4.9 Safety.**

**4.9.1 General.** Inspection, testing, and maintenance activities shall be conducted in accordance with applicable safety regulations.

**4.9.2 Confined Spaces.** Legally required precautions shall be taken prior to entering confined spaces such as tanks, valve pits, or trenches.

**4.9.3 Fall Protection.** Legally required equipment shall be worn or used to prevent injury from falls to personnel.

**4.9.4 Hazards.** Precautions shall be taken to address any hazards, such as protection against drowning where working on the top of a filled embankment or a supported, rubberized fabric tank, or over open water or other liquids.

**4.9.5* Hazardous Materials.**

**4.9.5.1** Legally required equipment shall be used where working in an environment with hazardous materials present.

**4.9.5.2** The property owner or designated representative shall advise anyone performing inspection, testing, and maintenance on any system under the scope of this document, with regard to hazardous materials stored on the premises.

**4.9.6* Electrical Safety.** Legally required precautions shall be taken when testing or maintaining electric controllers for motor-driven fire pumps.

## Chapter 5 Sprinkler Systems

**5.1 General.**

**5.1.1 Minimum Requirements.**

**5.1.1.1** This chapter shall provide the minimum requirements for the routine inspection, testing, and maintenance of sprinkler systems.

**5.1.1.2** Table 5.1.1.2 shall be used to determine the minimum required frequencies for inspection, testing, and maintenance.

**5.1.2 Valves and Connections.** Valves and fire department connections shall be inspected, tested, and maintained in accordance with Chapter 13.

**5.1.3 Obstruction Investigations.** The procedures outlined in Chapter 14 shall be followed where there is a need to conduct an obstruction investigation.

**5.1.4 Impairments.** The procedures outlined in Chapter 15 shall be followed where an impairment to protection occurs.

**5.1.5 Hose Connections.** Hose connections shall be inspected, tested, and maintained in accordance with Chapters 6 and 13.

**5.2* Inspection.**

**5.2.1 Sprinklers.**

**5.2.1.1*** Sprinklers shall be inspected from the floor level annually.

**5.2.1.1.1*** Sprinklers shall not show signs of leakage; shall be free of corrosion, foreign materials, paint, and physical damage; and shall be installed in the correct orientation (e.g., upright, pendent, or sidewall).

**5.2.1.1.2** Any sprinkler that shows signs of any of the following shall be replaced:

(1) Leakage
(2)*Corrosion
(3) Physical damage
(4) Loss of fluid in the glass bulb heat-responsive element
(5)*Loading
(6) Painting unless painted by the sprinkler manufacturer

**5.2.1.1.3*** Any sprinkler that has been installed in the incorrect orientation shall be corrected by repositioning the branchline, drop, or sprig, or shall be replaced.

**5.2.1.1.4*** Sprinklers installed in concealed spaces such as above suspended ceilings shall not require inspection.

**5.2.1.1.5** Sprinklers installed in areas that are inaccessible for safety considerations due to process operations shall be inspected during each scheduled shutdown.

**5.2.1.1.6** Escutcheons and coverplates for recessed, flush, and concealed sprinklers shall be replaced if found missing during the inspection.

**5.2.1.1.7** Escutcheons for pendent sprinklers that are not recessed, flush, or concealed shall not be required to be replaced if found missing during the inspection.

**5.2.1.2*** The minimum clearance to storage as described in 5.2.1.2.1 through 5.2.1.2.6 shall be maintained below all sprinkler deflectors.

**5.2.1.2.1*** Unless greater distances are required by 5.2.1.2.2, 5.2.1.2.3, or 5.2.1.2.4, or lesser distances are permitted by 5.2.1.2.6, clearance between the deflector and the top of storage shall be 18 in. (457 mm) or greater.

**5.2.1.2.2** Where standards other than NFPA 13, *Standard for the Installation of Sprinkler Systems*, specify greater clearance to storage minimums, they shall be followed.

**5.2.1.2.3*** Clearance between the deflector and the top of storage shall be 36 in. (914 mm) or greater for special sprinklers.

**5.2.1.2.4** Clearance from the top of storage to sprinkler deflectors shall be 36 in. (914 mm) or greater where rubber tires are stored.

**5.2.1.2.5** In-rack sprinklers shall not be required to meet the obstruction criteria and clearance from storage requirements.

**5.2.1.2.6*** Clearance between the deflector and the top of storage shall be permitted to be less than 18 in. (457 mm) where shown to be permitted by the installation standard.

**5.2.1.3*** Storage closer to the sprinkler deflector than permitted by the clearance rules of the installation standard described in 5.2.1.2.1 through 5.2.1.2.4 shall be corrected.

**5.2.1.4** The supply of spare sprinklers shall be inspected annually for the following:

(1) The correct number and type of sprinklers as required by 5.4.1.5
(2) A sprinkler wrench for each type of sprinkler as required by 5.4.1.5.5
(3) The list of spare sprinklers as required by 5.4.1.5.6

Copyright 2015 National Fire Protection Association (NFPA). Licensed, by agreement, for individual use and download on October 23, 2015 to VETERANS AFFAIRS. No other reproduction or transmission in any form permitted without written permission of NFPA. For inquires or to report unauthorized use, contact licensing@nfpa.org.



**Table 5.1.1.2 Summary of Sprinkler System Inspection, Testing, and Maintenance**

| Item | Frequency | Reference |
|---|---|---|
| **Inspection** | | |
| Gauges (dry, preaction, and deluge systems) | Weekly/quarterly | 5.2.4.2, 5.2.4.3, 5.2.4.4 |
| Control valves | | Table 13.1.1.2 |
| Waterflow alarm devices | Quarterly | 5.2.5 |
| Valve supervisory signal devices | Quarterly | 5.2.5 |
| Supervisory signal devices (except valve supervisory switches) | Quarterly | 5.2.5 |
| Gauges (wet pipe systems) | Quarterly | 5.2.4.1 |
| Hydraulic nameplate | Quarterly | 5.2.6 |
| Buildings | Annually (prior to freezing weather) | 4.1.1.1 |
| Hanger/seismic bracing | Annually | 5.2.3 |
| Pipe and fittings | Annually | 5.2.2 |
| Sprinklers | Annually | 5.2.1 |
| Spare sprinklers | Annually | 5.2.1.4 |
| Information sign | Annually | 5.2.8 |
| Fire department connections | | Table 13.1.1.2 |
| Valves (all types) | | Table 13.1.1.2 |
| Obstruction, internal inspection of piping | 5 years | 14.2 |
| Heat trace | Per manufacturer's requirements | 5.2.7 |
| **Test** | | |
| Waterflow alarm devices | | |
| Mechanical devices | Quarterly | 5.3.3.1 |
| Vane and pressure switch–type devices | Semiannually | 5.3.3.2 |
| Valve supervisory signal devices | | Table 13.1.1.2 |
| Supervisory signal devices (except valve supervisory switches) | | Table 13.1.1.2 |
| Main drain | | Table 13.1.1.2 |
| Antifreeze solution | Annually | 5.3.4 |
| Gauges | 5 years | 5.3.2 |
| Sprinklers (extra-high or greater temperature solder type) | 5 years | 5.3.1.1.1.4 |
| Sprinklers (fast-response) | At 20 years and every 10 years thereafter | 5.3.1.1.1.3 |
| Sprinklers | At 50 years and every 10 years thereafter | 5.3.1.1.1 |
| Sprinklers | At 75 years and every 5 years thereafter | 5.3.1.1.1.5 |
| Sprinklers (dry) | At 10 years and every 10 years thereafter | 5.3.1.1.1.6 |
| Sprinklers (in harsh environments) | 5 years | 5.3.1.1.2 |
| Valves (all types) | | Table 13.1.1.2 |
| Valve status test | | 13.3.1.2.1 |
| **Maintenance** | | |
| Valves (all types) | | Table 13.1.1.2 |
| Low-point drains (dry pipe system) | | 13.4.4.3.2 |
| Sprinklers and automatic spray nozzles protecting commercial cooking equipment and ventilation systems | Annually | 5.4.1.9 |
| **Investigation** | | |
| Obstruction | | 14.3 |

Copyright 2015 National Fire Protection Association (NFPA). Licensed, by agreement, for individual use and download on October 23, 2015 to VETERANS AFFAIRS. No other reproduction or transmission in any form permitted without written permission of NFPA. For inquires or to report unauthorized use, contact licensing@nfpa.org.



**5.2.2* Pipe and Fittings.** Sprinkler pipe and fittings shall be inspected annually from the floor level.

**5.2.2.1*** Pipe and fittings shall be in good condition and free of mechanical damage, leakage, and corrosion.

**5.2.2.2** Sprinkler piping shall not be subjected to external loads by materials either resting on the pipe or hung from the pipe.

**5.2.2.3*** Pipe and fittings installed in concealed spaces such as above suspended ceilings shall not require inspection.

**5.2.2.4** Pipe and fittings installed in areas that are inaccessible for safety considerations due to process operations shall be inspected during each scheduled shutdown.

**5.2.3* Hangers and Seismic Braces.** Sprinkler pipe hangers and seismic braces shall be inspected annually from the floor level.

**5.2.3.1** Hangers and seismic braces shall not be damaged, loose, or unattached.

**5.2.3.2** Hangers and seismic braces that are damaged, loose, or unattached shall be replaced or refastened.

**5.2.3.3*** Hangers and seismic braces installed in concealed spaces such as above suspended ceilings shall not require inspection.

**5.2.3.4** Hangers and seismic bracing installed in areas that are inaccessible for safety considerations due to process operations shall be inspected during each scheduled shutdown.

**5.2.4 Gauges.**

**5.2.4.1*** Gauges on wet pipe and deluge sprinkler systems shall be inspected quarterly to ensure that they are in good condition and that normal water supply pressure is being maintained.

**5.2.4.2** Gauges on dry and preaction systems shall be inspected weekly to ensure that normal air or nitrogen and water pressures are being maintained.

**5.2.4.3** Where air pressure supervision is connected to a constantly attended location, gauges shall be inspected monthly.

**5.2.4.4*** For dry pipe or preaction systems protecting freezers with two air pressure gauges on the air line(s) between the compressor and the dry pipe or preaction valve, the air pressure gauge near the compressor shall be compared weekly to the pressure gauge above the dry pipe or preaction valve.

**5.2.4.4.1** When the gauge near the compressor is reading higher than the gauge near the dry pipe valve, the air line in service shall be taken out of service, and the alternate air line opened to equalize the pressure.

**5.2.4.4.2** The air line taken out of service shall be internally inspected, shall have all ice blockage removed, and shall be reassembled for use as a future alternate air line.

**5.2.5 Waterflow Alarm and Supervisory Signal Initiating Device.** Waterflow alarm and supervisory signal initiating devices shall be inspected quarterly to verify that they are free of physical damage.

**5.2.6* Hydraulic Design Information Sign.** The hydraulic design information sign shall be inspected quarterly to verify that it is provided, attached securely to the sprinkler riser, and is legible.

**5.2.6.1** A hydraulic design information sign that is missing or illegible shall be replaced.

**5.2.6.2** A pipe schedule system shall have a hydraulic design information sign that reads "Pipe Schedule System."

**5.2.7 Heat Tracing.** Heat tracing shall be inspected and maintained in accordance with manufacturer's requirements.

**5.2.8 Information Sign.** The information sign required by 4.1.9 shall be inspected annually to verify that it is provided, securely attached, and legible.

**5.2.9* General Information Sign.** The general information sign required by NFPA 13 shall be inspected annually to verify that it is provided, securely attached, and legible.

**5.3 Testing.**

**5.3.1* Sprinklers.**

**5.3.1.1*** Where required by this section, sample sprinklers shall be submitted to a recognized testing laboratory acceptable to the authority having jurisdiction for field service testing.

**5.3.1.1.1** Where sprinklers have been in service for 50 years, they shall be replaced or representative samples from one or more sample areas shall be tested.

**5.3.1.1.1.1** Test procedures shall be repeated at 10-year intervals.

**5.3.1.1.1.2** Sprinklers manufactured prior to 1920 shall be replaced.

**5.3.1.1.1.3*** Sprinklers manufactured using fast-response elements that have been in service for 20 years shall be replaced or representative samples shall be tested and then retested at 10-year intervals.

**5.3.1.1.1.4*** Representative samples of solder-type sprinklers with a temperature classification of extra high [325°F (163°C)] or greater that are exposed to semicontinuous to continuous maximum allowable ambient temperature conditions shall be tested at 5-year intervals.

**5.3.1.1.1.5** Where sprinklers have been in service for 75 years, they shall be replaced or representative samples from one or more sample areas shall be submitted to a recognized testing laboratory acceptable to the authority having jurisdiction for field service testing and repeated at 5-year intervals.

**5.3.1.1.1.6*** Dry sprinklers that have been in service for 10 years shall be replaced or representative samples shall be tested and then retested at 10-year intervals.

**5.3.1.1.2*** Where sprinklers are subjected to harsh environments, including corrosive atmospheres and corrosive water supplies, on a 5-year basis, either sprinklers shall be replaced or representative sprinkler samples shall be tested.

**5.3.1.1.3** Where historical data indicate, longer intervals between testing shall be permitted.

**5.3.1.2*** A representative sample of sprinklers for testing per 5.3.1.1.1 shall consist of a minimum of not less than four sprinklers or 1 percent of the number of sprinklers per individual sprinkler sample, whichever is greater.

Copyright 2015 National Fire Protection Association (NFPA). Licensed, by agreement, for individual use and download on October 23, 2015 to VETERANS AFFAIRS. No other reproduction or transmission in any form permitted without written permission of NFPA. For inquires or to report unauthorized use, contact licensing@nfpa.org.



**5.3.1.3** Where one sprinkler within a representative sample fails to meet the test requirement, all sprinklers within the area represented by that sample shall be replaced.

**5.3.1.3.1** Manufacturers shall be permitted to make modifications to their own sprinklers in the field with listed devices that restore the original performance as intended by the listing, where acceptable to the authority having jurisdiction.

**5.3.2* Gauges.**

**5.3.2.1** Gauges shall be replaced every 5 years or tested every 5 years by comparison with a calibrated gauge.

**5.3.2.2** Gauges not accurate to within 3 percent of the full scale shall be recalibrated or replaced.

**5.3.2.3** Where multiple system risers are supplied by a common water supply source with gauges located at the same elevation, and the gauges for all systems read within 3 percent of the other(s), only one gauge shall be required to be tested to determine if replacement is required.

**5.3.3 Waterflow Alarm Devices.**

**5.3.3.1** Mechanical waterflow alarm devices including, but not limited to, water motor gongs, shall be tested quarterly.

**5.3.3.2*** Vane-type and pressure switch–type waterflow alarm devices shall be tested semiannually.

**5.3.3.3** Testing waterflow alarm devices on wet pipe systems shall be accomplished by opening the inspector's test connection.

**5.3.3.3.1** Where freezing weather conditions or other circumstances prohibit use of the inspector's test connection, the bypass connection shall be permitted to be used.

**5.3.3.4** Fire pumps shall not be taken out of service during testing unless constantly attended by qualified personnel or all impairment procedures contained in Chapter 15 are followed.

**5.3.3.5*** Testing waterflow alarm devices on dry pipe, preaction, or deluge systems shall be accomplished by using the bypass connection.

**5.3.4* Antifreeze Systems.** Annually, before the onset of freezing weather, the antifreeze solution shall be tested using the following procedure:

(1) Using installation records, maintenance records, information from the owner, chemical tests, or other reliable sources of information, the type of antifreeze in the system shall be determined.
   (a) If the type of antifreeze is found to be a type that is no longer permitted, the system shall be drained completely and replaced with an acceptable solution.
   (b) If the type of antifreeze cannot be reliably determined, the system shall be drained completely and replaced with an acceptable solution.
(2) If the antifreeze is not replaced in accordance with step 1, test samples shall be taken at the top of each system and at the bottom of each system.
   (a) If the most remote portion of the system is not near the top or the bottom of the system, an additional sample shall be taken at the most remote portion.
   (b) If the connection to the water supply piping is not near the top or the bottom of the system, an additional sample shall be taken at the connection to the water supply.
(3) The specific gravity of each solution shall be checked using a hydrometer with a suitable scale or a refractometer having a scale calibrated for the antifreeze solution.
(4) If any of the samples exhibits a concentration in excess of what is permitted by NFPA 25, the system shall be emptied and refilled with a new acceptable solution. If a concentration greater than what is currently permitted by NFPA 25 was necessary to keep the fluid from freezing, alternate methods of preventing the pipe from freezing shall be employed.
(5) If any of the samples exhibits a concentration lower than what is necessary to keep the fluid from freezing, the system shall be emptied and refilled with a new acceptable solution.

**5.3.4.1** The use of antifreeze solutions shall be in conformity with state and local health regulations.

**5.3.4.1.1*** Listed CPVC sprinkler pipe and fittings shall be protected from freezing with glycerine only.

**5.3.4.1.1.1** The use of diethylene, ethylene, or propylene glycols shall be specifically prohibited.

**5.3.4.2** Except as permitted by 5.3.4.2.1 and 5.3.4.2.2, all antifreeze systems shall utilize listed antifreeze solutions.

**5.3.4.2.1*** For systems installed prior to September 30, 2012, listed antifreeze solutions shall not be required until September 30, 2022, where all of the following conditions are met:

(1)*The concentration of the antifreeze solution shall be limited to 50 percent glycerine by volume or 40 percent propylene glycol by volume.
(2) Newly introduced solutions shall be factory premixed antifreeze solutions (chemically pure or United States Pharmacopeia 96.5 percent).
(3)*Antifreeze systems with concentrations in excess of 30 percent propylene glycol and 38 percent glycerine shall be permitted based upon an approved deterministic risk assessment prepared by a qualified person approved by the authority having jurisdiction.

**5.3.4.2.2** Premixed antifreeze solutions of propylene glycol exceeding 30 percent concentration by volume shall be permitted for use with ESFR sprinklers where the ESFR sprinklers are listed for such use in a specific application.

**5.3.4.3** The antifreeze solution shall be tested at its most remote portion and where it interfaces with the wet pipe system.

**5.3.4.4** When antifreeze systems have a capacity larger than 150 gal (568 L), tests at one additional point for every 100 gal (379 L) shall be made.

**5.3.4.4.1** If the results indicate an incorrect freeze point at any point in the system, the system shall be drained and refilled with new premixed antifreeze.

**5.3.4.4.2** For premixed solutions, the manufacturer's instructions shall be permitted to be used with regard to the number of test points and refill procedure.

Copyright 2015 National Fire Protection Association (NFPA). Licensed, by agreement, for individual use and download on October 23, 2015 to VETERANS AFFAIRS. No other reproduction or transmission in any form permitted without written permission of NFPA. For inquires or to report unauthorized use, contact licensing@nfpa.org.



**5.4 Maintenance.**

**5.4.1 Sprinklers.**

**5.4.1.1** Where a sprinkler has been removed for any reason, it shall not be reinstalled.

**5.4.1.2*** Replacement sprinklers shall have the proper characteristics for the application intended, which include the following:

(1) Style
(2) Orifice size and K-factor
(3) Temperature rating
(4) Coating, if any
(5) Deflector type (e.g., upright, pendent, sidewall)
(6) Design requirements

**5.4.1.2.1*** Spray sprinklers shall be permitted to replace old-style sprinklers.

**5.4.1.2.2** Replacement sprinklers for piers and wharves shall comply with NFPA 307, *Standard for the Construction and Fire Protection of Marine Terminals, Piers, and Wharves.*

**5.4.1.3** Only new, listed sprinklers shall be used to replace existing sprinklers.

**5.4.1.4*** Special and quick-response sprinklers as defined by NFPA 13, *Standard for the Installation of Sprinkler Systems*, shall be replaced with sprinklers of the same orifice, size, temperature range and thermal response characteristics, and K-factor.

**5.4.1.5*** A supply of at least six spare sprinklers shall be maintained on the premises so that any sprinklers that have operated or been damaged in any way can be promptly replaced.

**5.4.1.5.1** The sprinklers shall correspond to the types and temperature ratings of the sprinklers in the property.

**5.4.1.5.2** The sprinklers shall be kept in a cabinet located where the temperature in which they are subjected will at no time exceed 100°F (38°C).

**5.4.1.5.3** Where dry sprinklers of different lengths are installed, spare dry sprinklers shall not be required, provided that a means of returning the system to service is furnished.

**5.4.1.5.4** The stock of spare sprinklers shall include all types and ratings installed and shall be as follows:

(1) For protected facilities having under 300 sprinklers — no fewer than 6 sprinklers
(2) For protected facilities having 300 to 1000 sprinklers — no fewer than 12 sprinklers
(3) For protected facilities having over 1000 sprinklers — no fewer than 24 sprinklers

**5.4.1.5.5*** One sprinkler wrench as specified by the sprinkler manufacturer shall be provided in the cabinet for each type of sprinkler installed to be used for the removal and installation of sprinklers in the system.

**5.4.1.5.6** A list of the sprinklers installed in the property shall be posted in the sprinkler cabinet.

**5.4.1.5.6.1*** The list shall include the following:

(1) Sprinkler identification number (SIN) if equipped; or the manufacturer, model, orifice, deflector type, thermal sensitivity, and pressure rating
(2) General description
(3) Quantity of each type to be contained in the cabinet
(4) Issue or revision date of the list

**5.4.1.6*** Sprinklers shall not be altered in any respect or have any type of ornamentation, paint, or coatings applied after shipment from the place of manufacture.

**5.4.1.7** Sprinklers and automatic spray nozzles used for protecting commercial-type cooking equipment and ventilating systems shall be replaced annually.

**5.4.1.7.1** Where automatic bulb-type sprinklers or spray nozzles are used and annual examination shows no buildup of grease or other material on the sprinklers or spray nozzles, such sprinklers and spray nozzles shall not be required to be replaced.

**5.4.1.8 Protective Coverings.**

**5.4.1.8.1*** Sprinklers protecting spray areas and mixing rooms in resin application areas installed with protective coverings shall continue to be protected against overspray residue so that they will operate in the event of fire.

**5.4.1.8.2** Sprinklers installed as described in 5.4.1.8.1 shall be protected using cellophane bags having a thickness of 0.003 in. (0.076 mm) or less or thin paper bags.

**5.4.1.8.3** Coverings shall be replaced periodically so that heavy deposits of residue do not accumulate.

**5.4.2* Dry Pipe Systems.** Dry pipe systems shall be kept dry at all times.

**5.4.2.1** During nonfreezing weather, a dry pipe system shall be permitted to be left wet if the only other option is to remove the system from service while waiting for parts or during repair activities.

**5.4.2.2** Refrigerated spaces or other areas within the building interior where temperatures are maintained at or below 40°F (4.0°C) shall not be permitted to be left wet.

**5.4.2.3** Air driers shall be maintained in accordance with the manufacturer's instructions.

**5.4.2.4** Compressors used in conjunction with dry pipe sprinkler systems shall be maintained in accordance with the manufacturer's instructions.

**5.4.3* Marine Systems.** Sprinkler systems that are normally maintained using fresh water as a source shall be drained and refilled, then drained and refilled again with fresh water following the introduction of raw water into the system.

**5.5 Component Action Requirements.**

**5.5.1** Whenever a component in a sprinkler system is adjusted, repaired, reconditioned, or replaced, the actions required in Table 5.5.1 shall be performed.

**5.5.2** Where the original installation standard is different from the cited standard, the use of the appropriate installing standard shall be permitted.

**5.5.3** These actions shall not require a design review, which is outside the scope of this standard.

Copyright 2015 National Fire Protection Association (NFPA). Licensed, by agreement, for individual use and download on October 23, 2015 to VETERANS AFFAIRS. No other reproduction or transmission in any form permitted without written permission of NFPA. For inquires or to report unauthorized use, contact licensing@nfpa.org.



**Table 5.5.1 Summary of Component Replacement Action Requirements**

| Component | Adjust | Repair/ Recondition | Replace | Required Action |
|---|---|---|---|---|
| **Water Delivery Components** | | | | |
| Pipe and fittings affecting less than 20 sprinklers | X | X | X | Inspect for leaks at system working pressure |
| Pipe and fittings affecting more than 20 sprinklers | X | X | X | Hydrostatic test in conformance with NFPA 13, *Standard for the Installation of Sprinkler Systems* |
| Sprinklers, less than 20 | X | | X | Inspect for leaks at system working pressure |
| Sprinklers, more than 20 | X | | X | Hydrostatic test in conformance with NFPA 13 |
| Fire department connections | X | X | X | See Chapter 13 |
| Antifreeze solution | X | | X | Inspect freezing point of solution<br>Inspect for leaks at system working pressure |
| **Alarm and Supervisory Components** | | | | |
| Vane-type waterflow | X | X | X | Operational test using inspector's test connection |
| Pressure switch–type waterflow | X | X | X | Operational test using the inspector's test connection or alarm bypass test valve |
| Water motor gong | X | X | X | Operational test using inspector's test connection |
| High and low air pressure switch | X | X | X | Operational test of high and low settings |
| Valve supervisory signal initiating device | X | X | X | Test for conformance with NFPA 13 and/or *NFPA 72, National Fire Alarm and Signaling Code* |
| Detection system (for deluge or preaction system) | X | X | X | Operational test for conformance with NFPA 13 and/or *NFPA 72* |
| **Status-Indicating Components** | | | | |
| Gauges | | | X | Verify at 0 bar (0 psi) and system working pressure |
| **Testing and Maintenance Components** | | | | |
| Air compressor | X | X | X | Operational test for conformance with NFPA 13 |
| Automatic air maintenance device | X | X | X | Operational test for conformance with NFPA 13 |
| Main drain | X | X | X | Main drain test |
| Auxiliary drains | X | X | X | Inspect for leaks at system working pressure; main drain test |
| Inspector's test connection | X | X | X | Inspect for leaks at system working pressure; main drain test |
| **Structural Components** | | | | |
| Hanger/seismic bracing | X | X | X | Inspect for conformance with NFPA 13 |
| Pipe stands | X | X | X | Inspect for conformance with NFPA 13 |
| **Informational Components** | | | | |
| Identification signs | X | X | X | Inspect for conformance with NFPA 13 and this standard |
| Hydraulic design information sign | X | X | X | Inspect for conformance with NFPA 13 and this standard |
| General information sign | X | X | X | Inspect for conformance with this standard |

Copyright 2015 National Fire Protection Association (NFPA). Licensed, by agreement, for individual use and download on October 23, 2015 to VETERANS AFFAIRS. No other reproduction or transmission in any form permitted without written permission of NFPA. For inquires or to report unauthorized use, contact licensing@nfpa.org.



## Chapter 6 Standpipe and Hose Systems

**6.1 General.**

**6.1.1 Minimum Requirements.**

**6.1.1.1** This chapter shall provide the minimum requirements for the routine inspection, testing, and maintenance of standpipe and hose systems.

**6.1.1.2** Table 6.1.1.2 shall be used to determine the minimum required frequencies for inspection, testing, and maintenance.

**6.1.2** Table 6.1.2 shall be used for the inspection, testing, and maintenance of all classes of standpipe and hose systems.

**6.1.3** Checkpoints and corrective actions outlined in Table 6.1.2 shall be followed to determine that components are free of corrosion, foreign material, physical damage, tampering, or other conditions that adversely affect system operation.

**6.1.4** Valves and fire department connections shall be inspected, tested, and maintained in accordance with Chapter 13.

**6.1.5** The procedures outlined in Chapter 14 shall be followed where there is a need to conduct an obstruction investigation.

**6.1.6** Where the inspection, testing, and maintenance of standpipe and hose systems results or involves a system that is out of service, the impairment procedures outlined in Chapter 15 shall be followed.

**6.1.7** Where approved by the authority having jurisdiction, existing hose shall be permitted to be removed and shall not be recorded as a deficiency.

**6.2 Inspection.**

**6.2.1 Components.** Components of standpipe and hose systems shall be visually inspected annually or as specified in Table 6.1.1.2.

**6.2.2 Gauges.**

**6.2.2.1** Gauges on automatic wet and semiautomatic dry standpipe systems shall be inspected quarterly to ensure that they are in good condition and that normal water supply pressure is being maintained.

**Table 6.1.1.2 Summary of Standpipe and Hose Systems Inspection, Testing, and Maintenance**

| Item | Frequency | Reference |
|---|---|---|
| **Inspection** | | |
| Control valves | | Table 13.1.1.2 |
| Pressure-regulating devices | | Table 13.1.1.2 |
| Piping | Annually | 6.2.1 |
| Hose connections | | Table 13.1.1.2 ] |
| Cabinet | Annually | NFPA 1962 |
| Gauges | Weekly/quarterly | 6.2.2 |
| Hose | Annually | NFPA 1962 |
| Hose storage device | Annually | NFPA 1962 |
| Hose nozzle | Annually and after each use | NFPA 1962 |
| Hydraulic design information sign | Annually | 6.2.3 |
| Hose valves | | Table 13.1.1.2 |
| Hose connection | | Table 13.1.1.2 |
| **Test** | | |
| Waterflow alarm devices | | Table 13.1.1.2 |
| Valve supervisory devices | | Table 13.1.1.2 |
| Supervisory signal devices (except valve supervisory switches) | | Table 13.1.1.2 |
| Hose storage device | Annually | NFPA 1962 |
| Hose | 5 years/3 years | NFPA 1962 |
| Pressure control valve | | Table 13.1.1.2 |
| Pressure-reducing valve | | Table 13.1.1.2 |
| Hydrostatic test | 5 years | 6.3.2 |
| Flow test | 5 years | 6.3.1 |
| Main drain test | | Table 13.1.1.2 |
| Hose valves | | Table 13.1.1.2 |
| Hose connections | | Table 13.1.1.2 |
| Valve status test | | 13.3.1.2.1 |
| **Maintenance** | | |
| Hose connections | Annually | Table 6.1.2 |
| Valves (all types) | Annually/as needed | Table 13.1.1.2 |
| Hose valves | | Table 13.1.1.2 |

Copyright 2015 National Fire Protection Association (NFPA). Licensed, by agreement, for individual use and download on October 23, 2015 to VETERANS AFFAIRS. No other reproduction or transmission in any form permitted without written permission of NFPA. For inquires or to report unauthorized use, contact licensing@nfpa.org.



**Table 6.1.2 Standpipe and Hose Systems**

| Component/Checkpoint | Corrective Action |
|---|---|
| **Hose Connections** | |
| Cap missing | Replace |
| Fire hose connection damaged | Repair |
| Valve handles missing | Replace |
| Cap gaskets missing or deteriorated | Replace |
| Valve leaking | Close or repair |
| Visible obstructions | Remove |
| Restricting device missing | Replace |
| Manual, semiautomatic, or dry standpipe — valve does not operate smoothly | Lubricate or repair |
| **Piping** | |
| Damaged piping | Repair |
| Control valves damaged | Repair or replace |
| Missing or damaged pipe support device | Repair or replace |
| Damaged supervisory signal initiating device | Repair or replace |
| **Hose** | |
| Inspect | Remove and inspect the hose, including gaskets, and rerack or rereel at intervals in accordance with NFPA 1962, *Standard for the Care, Use, Inspection, Service Testing, and Replacement of Fire Hose, Couplings, Nozzles, and Fire Hose Appliances* |
| Mildew, cuts, abrasions, and deterioration evident | Replace with listed lined, jacketed hose |
| Coupling damaged | Replace or repair |
| Gaskets missing or deteriorated | Replace |
| Incompatible threads on coupling | Replace or provide thread adapter |
| Hose not connected to hose rack nipple or valve | Connect |
| Hose test outdated | Retest or replace in accordance with NFPA 1962 |
| **Hose Nozzle** | |
| Hose nozzle missing | Replace with listed nozzle |
| Gasket missing or deteriorated | Replace |
| Obstructions | Remove |
| Nozzle does not operate smoothly | Repair or replace |
| **Hose Storage Device** | |
| Difficult to operate | Repair or replace |
| Damaged | Repair or replace |
| Obstruction | Remove |
| Hose improperly racked or rolled | Remove |
| Nozzle clip in place and nozzle correctly contained? | Replace if necessary |
| If enclosed in cabinet, will hose rack swing out at least 90 degrees? | Repair or remove any obstructions |
| **Cabinet** | |
| Inspect overall condition for corroded or damaged parts | Repair or replace parts; replace entire cabinet if necessary |
| Difficult to open | Repair |
| Cabinet door will not open fully | Repair or move obstructions |
| Door glazing cracked or broken | Replace |
| If cabinet is break-glass type, is lock functioning properly? | Repair or replace |
| Glass break device missing or not attached | Replace or attach |
| Not properly identified as containing fire equipment | Provide identification |
| Visible obstructions | Remove |
| All valves, hose, nozzles, fire extinguisher, etc., easily accessible | Remove any material not related |

Copyright 2015 National Fire Protection Association (NFPA). Licensed, by agreement, for individual use and download on October 23, 2015 to VETERANS AFFAIRS. No other reproduction or transmission in any form permitted without written permission of NFPA. For inquires or to report unauthorized use, contact licensing@nfpa.org.



**6.2.2.2** Gauges on automatic dry standpipe systems shall be inspected weekly to ensure that normal air or nitrogen and water pressure are being maintained.

**6.2.2.3** Where air pressure supervision is connected to a constantly attended location, gauges shall be inspected monthly.

**6.2.3* Hydraulic Design Information Sign.** The hydraulic design information sign for standpipe systems shall be inspected annually to verify that it is provided, attached securely, and legible.

**6.2.3.1** A hydraulic design information sign that is missing or illegible shall be replaced.

**6.2.3.2** A standpipe system that was not sized by hydraulic design shall have a hydraulic design information sign that reads "Pipe Schedule System."

**6.3 Testing.** Where water damage is a possibility, an air test shall be conducted on the system at 25 psi (1.7 bar) prior to introducing water to the system.

**6.3.1 Flow Tests.**

**6.3.1.1*** A flow test shall be conducted every 5 years on all Class I and Class III standpipe systems to verify that the required flow and pressure are available at the hydraulically most remote hose valve outlet(s) while flowing the standpipe system demand.

**6.3.1.1.1** Where a flow test of the hydraulically most remote outlet(s) is not practical, the authority having jurisdiction shall be consulted for the appropriate location for the test.

**6.3.1.2*** The standpipe system demand shall include 500 gpm (1892 L/min) for the first standpipe and 250 gpm (946 L/min) for each additional standpipe until the total system demand is simultaneously flowing.

**6.3.1.2.1*** The 250 gpm (946 L/min) required from each additional standpipe shall be allowed to be flowed from the most convenient hose valve on that standpipe.

**6.3.1.2.2*** Where the 250 gpm (946 L/min) cannot be flowed from each additional standpipe, the authority having jurisdiction shall determine where the additional flow can be taken.

**6.3.1.3** The standpipe system demand shall be based on the design criteria in effect at the time of the installation.

**6.3.1.3.1** Where the standpipe system demand cannot be determined, the authority having jurisdiction shall determine the standpipe system demand.

**6.3.1.3.2** The actual test method(s) and performance criteria shall be discussed in advance with the authority having jurisdiction.

**6.3.1.4** Standpipes, sprinkler connections to standpipes, or hose stations equipped with pressure-reducing valves or pressure-regulating valves shall have these valves inspected, tested, and maintained in accordance with the requirements of Chapter 13.

**6.3.1.5** A main drain test shall be performed on all standpipe systems with automatic water supplies in accordance with the requirements of Chapter 13.

**6.3.1.5.1** The test shall be performed at the low point drain for each standpipe or the main drain test connection where the supply main enters the building (when provided).

**6.3.1.5.2** Pressure gauges shall be provided for the test and shall be maintained in accordance with 5.3.2.

**6.3.2 Hydrostatic Tests.**

**6.3.2.1*** Hydrostatic tests of not less than 200 psi (13.8 bar) pressure for 2 hours, or at 50 psi (3.4 bar) in excess of the maximum pressure, where maximum pressure is in excess of 150 psi (10.3 bar), shall be conducted every 5 years on manual standpipe systems and semiautomatic dry standpipe systems, including piping in the fire department connection.

**6.3.2.1.1** Manual wet standpipes that are part of a combined sprinkler/standpipe system shall not be required to be tested in accordance with 6.3.2.1.

**6.3.2.2** The hydrostatic test pressure shall be measured at the low elevation point of the individual system or zone being tested.

**6.3.2.2.1** The inside standpipe piping shall show no leakage.

**6.3.3 Waterflow Alarm and Supervisory Alarm Devices.**

**6.3.3.1** Where provided, waterflow alarm and supervisory alarm devices shall be tested in accordance with 13.2.6 and 13.3.3.5.

**6.3.3.2** Where freezing conditions necessitate a delay in testing, tests shall be performed as soon as weather allows.

**6.3.4* Gauges.**

**6.3.4.1** Gauges shall be replaced every 5 years or tested every 5 years by comparison with a calibrated gauge.

**6.3.4.2** Gauges not accurate to within 3 percent of the full scale shall be recalibrated or replaced.

**6.4 Maintenance.**

**6.4.1** Maintenance and repairs shall be in accordance with 6.1.3 and Table 6.1.2.

**6.4.2** Equipment that does not pass the inspection or testing requirements shall be repaired and tested again or replaced.

**6.5 Component Action Requirements.**

**6.5.1** Whenever components in standpipe and hose systems are adjusted, repaired, reconditioned, or replaced, the actions required in Table 6.5.1 shall be performed.

**6.5.2** Where the original installation standard is different from the cited standard, the use of the appropriate installing standard shall be permitted.

**6.5.3** These actions shall not require a design review, which is outside the scope of this standard.

Copyright 2015 National Fire Protection Association (NFPA). Licensed, by agreement, for individual use and download on October 23, 2015 to VETERANS AFFAIRS. No other reproduction or transmission in any form permitted without written permission of NFPA. For inquires or to report unauthorized use, contact licensing@nfpa.org.



**Table 6.5.1 Summary of Component Replacement Action Requirements**

| Component | Adjust | Repair | Replace | Required Action |
|---|---|---|---|---|
| **Water Delivery Components** | | | | |
| Control valves | X | X | X | See Chapter 13 |
| Hose valve pressure-regulating devices | X | X | X | See Chapter 13 |
| System pressure-regulating devices | X | X | X | See Chapter 13 |
| Piping | X | X | X | Hydrostatic test in conformance with NFPA 14, *Standard for the Installation of Standpipe and Hose Systems* |
| Fire hose | | | X | No action required |
| Fire hose | | X | | Perform hydrostatic test in accordance with NFPA 1962 |
| Hose valve | X | X | X | See Chapter 13 |
| Fire department connections | X | X | X | See Chapter 13 |
| Backflow prevention device | X | X | X | See Chapter 13 |
| **Alarm and Supervisory Components** | | | | |
| Vane-type waterflow | X | X | X | Operational test using inspector's test connection |
| Pressure switch–type waterflow | X | X | X | Operational test using inspector's test connection |
| Water motor gong | X | X | X | Operational test using inspector's test connection |
| Valve supervisory device | X | X | X | Operational test for receipt of alarms and verification of conformance with NFPA 14 and/or NFPA 72, *National Fire Alarm and Signaling Code* |
| **Status-Indicating Components** | | | | |
| Gauges | | | X | Verify at 0 psi (0 bar) and system working pressure |
| **System Housing and Protection Components** | | | | |
| Cabinet | X | X | X | Verify compliance with NFPA 14 |
| Hose storage rack | X | X | X | Verify compliance with NFPA 14 |
| **Testing and Maintenance Components** | | | | |
| Drain riser | X | X | X | Inspect for leaks while flowing from connection above the repair |
| Auxiliary drains | X | X | X | Inspect for leaks at system working pressure |
| Main drain | X | X | X | Inspect for leaks and residual pressure during main drain test |
| **Structural Components** | | | | |
| Hanger/seismic bracing | X | X | X | Verify conformance with NFPA 14 |
| Pipe stands | X | X | X | Verify conformance with NFPA 14 |
| **Informational Components** | | | | |
| Identification signs | X | X | X | Verify conformance with NFPA 14 |
| Hydraulic placards | X | X | X | Verify conformance with NFPA 14 |

## Chapter 7 Private Fire Service Mains

### 7.1 General.

#### 7.1.1 Minimum Requirements.

**7.1.1.1** This chapter shall provide the minimum requirements for the routine inspection, testing, and maintenance of private fire service mains and their appurtenances.

**7.1.1.2** Table 7.1.1.2 shall be used to determine the minimum required frequencies for inspection, testing, and maintenance.

**7.1.2 Valves and Connections.** Valves and fire department connections shall be inspected, tested, and maintained in accordance with Chapter 13.

**7.1.3 Obstruction Investigations.** The procedures outlined in Chapter 14 shall be followed where there is a need to conduct an obstruction investigation.

Copyright 2015 National Fire Protection Association (NFPA). Licensed, by agreement, for individual use and download on October 23, 2015 to VETERANS AFFAIRS. No other reproduction or transmission in any form permitted without written permission of NFPA. For inquires or to report unauthorized use, contact licensing@nfpa.org.



**Table 7.1.1.2 Summary of Private Fire Service Main Inspection, Testing, and Maintenance**

| Item | Frequency | Reference |
|---|---|---|
| **Inspection** | | |
| Hose houses | Quarterly | 7.2.2.7 |
| Hydrants (dry barrel and wall) | Annually and after each operation | 7.2.2.4 |
| Monitor nozzles | Semiannually | 7.2.2.6 |
| Hydrants (wet barrel) | Annually and after each operation | 7.2.2.5 |
| Mainline strainers | Annually and after each significant flow | 7.2.2.3 |
| Piping (exposed) | Annually | 7.2.2.1 |
| Piping (underground) | See 7.2.2.2 | 7.2.2.2 |
| **Test** | | |
| Monitor nozzles | Flow, annually (range and operation) | 7.3.3 |
| Hydrants | Flow, annually | 7.3.2 |
| Piping (exposed and underground) (flow test) | 5 years | 7.3.1 |
| Valve status test | | 13.3.1.2.1 |
| **Maintenance** | | |
| Mainline strainers | Annually and after each operation | 7.2.2.3 |
| Hose houses | Annually | 7.2.2.7 |
| Hydrants | Annually | 7.4.2 |
| Monitor nozzles | Annually | 7.4.3 |

**7.1.4 Fire Hose.** Fire hose shall be maintained in accordance with NFPA 1962, *Standard for the Care, Use, Inspection, Service Testing, and Replacement of Fire Hose, Couplings, Nozzles, and Fire Hose Appliances.*

**7.1.5 Impairments.** The procedures outlined in Chapter 15 shall be followed wherever such an impairment to protection occurs.

**7.2 Inspection and Corrective Action.**

**7.2.1 General.** Private fire service mains and their appurtenances shall be inspected at the intervals specified in Table 7.1.1.2.

**7.2.2* Procedures.** All procedures shall be carried out in accordance with the manufacturer's instructions, where applicable.

**7.2.2.1 Exposed Piping.**

**7.2.2.1.1** Exposed piping shall be inspected annually.

**7.2.2.1.2** Piping shall be inspected, and the necessary corrective action shall be taken as specified in Table 7.2.2.1.2.

**Table 7.2.2.1.2 Exposed Piping**

| Condition | Corrective Action |
|---|---|
| Leaks | Repair |
| Physical damage | Repair or replace |
| Corrosion | Clean or replace and coat with corrosion protection |
| Restraint methods | Repair or replace |

**7.2.2.1.3** Piping installed in areas that are inaccessible for safety considerations due to process operations shall be inspected during each scheduled shutdown.

**7.2.2.2* Underground Piping.**

**7.2.2.3* Mainline Strainers.** Mainline strainers shall be inspected and cleaned after each system flow exceeding that of a nominal 2 in. (50 mm) orifice and shall be removed and inspected annually for failing, damaged, and corroded parts, with the necessary corrective action taken as specified in Table 7.2.2.3.

**Table 7.2.2.3 Mainline Strainers**

| Condition | Corrective Action |
|---|---|
| Plugging or fouling | Clean |
| Corrosion | Replace or repair |

**7.2.2.4 Dry Barrel and Wall Hydrants.** Dry barrel and wall hydrants shall be inspected annually and after each operation, with the necessary corrective action taken as specified in Table 7.2.2.4.

**7.2.2.5 Wet Barrel Hydrants.** Wet barrel hydrants shall be inspected annually and after each operation, with the necessary corrective action taken as specified in Table 7.2.2.5.

**7.2.2.6 Monitor Nozzles.** Monitor nozzles shall be inspected semiannually, with the necessary corrective action taken as specified in Table 7.2.2.6.

**7.2.2.7 Hose Houses.** Hose houses shall be inspected quarterly, with the necessary corrective action taken as specified in Table 7.2.2.7.

**7.3 Testing.**

**7.3.1* Underground and Exposed Piping Flow Tests.** Underground and exposed piping serving hydrants shall be flow tested at minimum 5-year intervals.

Copyright 2015 National Fire Protection Association (NFPA). Licensed, by agreement, for individual use and download on October 23, 2015 to VETERANS AFFAIRS. No other reproduction or transmission in any form permitted without written permission of NFPA. For inquires or to report unauthorized use, contact licensing@nfpa.org.



**Table 7.2.2.4 Dry Barrel and Wall Hydrants**

| Condition | Corrective Action |
|---|---|
| Inaccessible | Make accessible |
| Barrel contains water or ice (presence of water or ice could indicate a faulty drain, a leaky hydrant valve, or high groundwater table) | Repair and drain; for high groundwater it could be necessary to plug the drain and pump out the barrel after each use |
| Improper drainage from barrel | Repair drain |
| Leaks in outlets or at top of hydrant | Repair or replace gaskets, packing, or parts as necessary |
| Cracks in hydrant barrel | Repair or replace |
| Tightness of outlet caps | Lubricate if necessary; tighten if necessary |
| Worn outlet threads | Repair or replace |
| Worn hydrant operating nut | Repair or replace |
| Availability of operating wrench | Make sure wrench is available |

**Table 7.2.2.5 Wet Barrel Hydrants**

| Condition | Corrective Action |
|---|---|
| Inaccessible | Make accessible |
| Leaks in outlets or at top of hydrant | Repair or replace gaskets, packing, or parts as necessary |
| Cracks in hydrant barrel | Repair or replace |
| Tightness of outlet caps | Lubricate if necessary; tighten if necessary |
| Worn outlet threads | Repair or replace |
| Worn hydrant operating nut | Repair or replace |
| Availability of operating wrench | Make sure wrench is available |

**Table 7.2.2.6 Monitor Nozzles**

| Condition | Corrective Action |
|---|---|
| Leakage | Repair |
| Physical damage | Repair or replace |
| Corrosion | Clean or replace, and lubricate or protect as necessary |

**Table 7.2.2.7 Hose Houses**

| Condition | Corrective Action |
|---|---|
| Inaccessible | Make accessible |
| Physical damage | Repair or replace |
| Missing equipment | Replace equipment |

**7.3.1.1** Any flow test results that indicate deterioration of available waterflow and pressure shall be investigated to the complete satisfaction of the authority having jurisdiction to ensure that the required flow and pressure are available for fire protection.

**7.3.1.2** Where underground piping supplies individual fire sprinkler, standpipe, water spray, or foam-water sprinkler systems and there are no means to conduct full flow tests, tests generating the maximum available flows shall be permitted.

**7.3.2 Hydrants.** Hydrants shall be tested annually to ensure proper functioning.

**7.3.2.1** Each hydrant shall be opened fully and water flowed until all foreign material has cleared.

**7.3.2.2** Flow shall be maintained for not less than 1 minute.

**7.3.2.3** After operation, dry barrel and wall hydrants shall be observed for proper drainage from the barrel.

**7.3.2.4** Full drainage shall take no longer than 60 minutes.

**7.3.2.5** Where soil conditions or other factors are such that the hydrant barrel does not drain within 60 minutes, or where the groundwater level is above that of the hydrant drain, the hydrant drain shall be plugged and the water in the barrel shall be pumped out.

**7.3.2.6** Dry barrel hydrants that are located in areas subject to freezing weather and that have plugged drains shall be identified clearly as needing pumping after operation.

**7.3.3 Monitor Nozzles.**

**7.3.3.1** Monitor nozzles that are mounted on hydrants shall be tested as specified in 7.3.2.

**7.3.3.2** All monitor nozzles shall be oscillated and moved throughout their full range annually to ensure proper operability.

**7.4 Maintenance.**

**7.4.1 General.** All equipment shall be maintained in proper working condition, consistent with the manufacturer's recommendations.

**7.4.2 Hydrants.**

**7.4.2.1** Hydrants shall be lubricated annually to ensure that all stems, caps, plugs, and threads are in proper operating condition.

**7.4.2.2*** Hydrants shall be kept free of snow, ice, or other materials and protected against mechanical damage so that free access is ensured.

**7.4.3 Monitor Nozzles.** Monitor nozzles shall be lubricated annually to ensure proper operating condition.

**7.5 Component Action Requirements.**

**7.5.1** Whenever a component in a private fire service system is adjusted, repaired, reconditioned, or replaced, the action required in Table 7.5.1 shall be performed.

**7.5.2** Where the original installation standard is different from the cited standard, the use of the appropriate installing standard shall be permitted.

**7.5.3*** Where a main drain is not provided, other equivalent means of flow testing shall be permitted.

**7.5.4** The actions of 7.5.1 shall not require a design review, which is outside the scope of this standard.

Copyright 2015 National Fire Protection Association (NFPA). Licensed, by agreement, for individual use and download on October 23, 2015 to VETERANS AFFAIRS. No other reproduction or transmission in any form permitted without written permission of NFPA. For inquires or to report unauthorized use, contact licensing@nfpa.org.



**Table 7.5.1 Summary of Component Replacement Action Requirements**

| Component | Adjust | Repair/ Recondition | Replace | Test Criteria |
|---|---|---|---|---|
| **Water Delivery Components** | | | | |
| Pipe and fittings (exposed) | X | X | X | Hydrostatic test in conformance with NFPA 24, *Standard for the Installation of Private Fire Service Mains and Their Appurtenances* |
| Pipe and fittings (underground) | | | | Flush in conformance with NFPA 24 or NFPA 20, as appropriate |
| Hydrants | X | X | X | Hydrostatic test in conformance with NFPA 24<br>Waterflow in conformance with NFPA 24<br>Inspect for proper drainage |
| Monitor nozzles | X | X | X | Hydrostatic test in conformance with NFPA 24<br>Flush in conformance with NFPA 24 |
| Mainline strainers | X | X | X | Flow test downstream of strainer |
| Fire department connection | X | X | X | See Chapter 13 |
| **Alarm and Supervisory Components** | | | | |
| Valve supervisory device | X | X | X | Operational test for conformance with NFPA 24 and/or *NFPA 72, National Fire Alarm and Signaling Code* |
| **System-Indicating Components** | | | | |
| Gauges | | | X | Verify at 0 psi (0 bar) and system working pressure |
| **System Housing and Protection Components** | | | | |
| Hose houses | X | X | X | Verify integrity of hose house and hose house components |
| Hose | | X | | Repair and test hose in accordance with NFPA 1962 |
| Hose | | | X | No action required |
| **Structural Components** | | | | |
| Thrust blocks | X | X | X | Test at system working pressure |
| Tie rods | X | X | X | Test at system working pressure |
| Retainer glands | X | X | X | Test at system working pressure |
| **Informational Components** | | | | |
| Identification signs | X | X | X | Verify conformance with NFPA 24 |

## Chapter 8 Fire Pumps

**8.1* General.**

**8.1.1 Minimum Requirements.**

**8.1.1.1** This chapter shall provide the minimum requirements for the routine inspection, testing, and maintenance of fire pump assemblies.

**8.1.1.2** Table 8.1.1.2 shall be used to determine the minimum required frequencies for inspection, testing, and maintenance.

**8.1.2 Alternative Inspection, Testing, and Maintenance Procedures.** In the absence of manufacturer's recommendations for preventive maintenance, Table 8.1.2 shall be used for alternative requirements.

**8.1.3 Valves and Connections.** Valves and fire department connections shall be inspected, tested, and maintained in accordance with Chapter 13.

**8.1.4 Obstruction Investigations.** The procedures outlined in Chapter 14 shall be followed where there is a need to conduct an obstruction investigation.

**8.1.5* Auxiliary Equipment.** The pump assembly auxiliary equipment shall include the following:

(1) Pump accessories as follows:
   (a) Pump shaft coupling
   (b) Automatic air release valve
   (c) Pressure gauges
   (d) Circulation relief valve (not used in conjunction with diesel engine drive with heat exchanger)

Copyright 2015 National Fire Protection Association (NFPA). Licensed, by agreement, for individual use and download on October 23, 2015 to VETERANS AFFAIRS. No other reproduction or transmission in any form permitted without written permission of NFPA. For inquires or to report unauthorized use, contact licensing@nfpa.org.



**Table 8.1.2 Alternative Fire Pump Inspection, Testing, and Maintenance Procedures**

| Complete as Applicable | Visual Inspection | Inspect | Change | Clean | Test | Frequency |
|---|---|---|---|---|---|---|
| **Pump System** | | | | | | |
| Pump bearings | | X | | | | Annually |
| Lubricate pump bearings | | | X | | | As needed |
| Inspect pump shaft end play | | X | | | | Annually |
| Inspect accuracy of pressure gauges and sensors | | X | X | | | Annually (replace or recalibrate when 5% out of calibration) |
| Inspect pump coupling alignment | | X | | | | Annually |
| Wet pit suction screens | | X | | X | | After each pump operation |
| **Mechanical Transmission** | | | | | | |
| Lubricate coupling | | | X | | | Annually |
| Lubricate right-angle gear drive | | | X | | | Annually |
| **Electrical System** | | | | | | |
| Exercise isolating switch and circuit breaker | | | | | X | Monthly |
| Trip circuit breaker (if mechanism provided) | | | | | X | Annually |
| Operate manual starting means (electrical) | | | | | X | Semiannually |
| Inspect and operate emergency manual starting means (without power) | X | | | | X | Annually |
| Tighten electrical connections as necessary | | X | | | | Annually |
| Lubricate mechanical moving parts (excluding starters and relays) | | X | | | | Annually |
| Calibrate pressure switch settings | | X | | | | Annually |
| Grease motor bearings | | X | | | | Annually |
| | | | X | | | Annually or as needed |
| Voltmeter and ammeter for accuracy (5%) | | X | | | | Annually |
| Any corrosion on printed circuit boards (PCBs) | X | | | | | Annually |
| Any cracked cable/wire insulation | X | | | | | Annually |
| Any leaks in plumbing parts | X | | | | | Annually |
| Any signs of water on electrical parts | X | | | | | Annually |
| **Diesel Engine System** | | | | | | |
| *Fuel* | | | | | | |
| Tank level | X | X | | | | Weekly |
| Tank float switch | X | | | | X | Weekly |
| Solenoid valve operation | X | | | | X | Weekly |
| Strainer, filter, or dirt leg, or combination thereof | | | | X | | Quarterly |
| Water and foreign material in tank | | | | X | | Annually |
| Water in system | | X | | X | | Weekly |
| Flexible hoses and connectors | X | | | | | Weekly |
| Tank vents and overflow piping unobstructed | | X | | | X | Annually |
| Piping | X | | | | | Annually |
| *Lubrication system* | | | | | | |
| Oil level | X | X | | | | Weekly |
| Oil change | | | X | | | 50 hours or annually |
| Oil filter(s) | | | X | | | 50 hours or annually |
| Lube oil heater | | X | | | | Weekly |
| Crankcase breather | X | | X | X | | Quarterly |

Copyright 2015 National Fire Protection Association (NFPA). Licensed, by agreement, for individual use and download on October 23, 2015 to VETERANS AFFAIRS. No other reproduction or transmission in any form permitted without written permission of NFPA. For inquires or to report unauthorized use, contact licensing@nfpa.org.



**Table 8.1.2** *Continued*

| Complete as Applicable | Visual Inspection | Inspect | Change | Clean | Test | Frequency |
|---|---|---|---|---|---|---|
| *Cooling system* | | | | | | |
| Level | X | X | | | | Weekly |
| Antifreeze protection level | | | | | X | Semiannually |
| Antifreeze | | X | | | | Annually |
| Adequate cooling water to heat exchanger | | X | | | | Weekly |
| Rod out heat exchanger | | | | X | | Annually |
| Water pump(s) | X | | | | | Weekly |
| Condition of flexible hoses and connections | X | X | | | | Weekly |
| Jacket water heater | | X | | | | Weekly |
| Inspect duct work, clean louvers (combustion air) | X | X | X | | | Annually |
| Water strainer | | | | X | | Quarterly |
| *Exhaust system* | | | | | | |
| Leakage | X | X | | | | Weekly |
| Drain condensate trap | | X | | | | Weekly |
| Insulation and fire hazards | X | | | | | Quarterly |
| Excessive back pressure | | | | | X | Annually |
| Exhaust system hangers and supports | X | | | | | Annually |
| Flexible exhaust section | X | | | | | Semiannually |
| *Battery system* | | | | | | |
| Electrolyte level | | X | | | | Weekly |
| Terminals clean and tight | X | X | | | | Quarterly |
| Case exterior clean and dry | X | X | | | | Monthly |
| Specific gravity or state of charge | | | | | X | Monthly |
| Charger and charge rate | X | | | | | Monthly |
| Equalize charge | | X | | | | Monthly |
| Clean terminals | | | | X | | Annually |
| Cranking voltage exceeds 9 volts on a 12 volt system or 18 volts on a 24 volt system | | X | | | | Weekly |
| *Electrical system* | | | | | | |
| General inspection | X | | | | | Weekly |
| Tighten control and power wiring connections | | X | | | | Annually |
| Wire chafing where subject to movement | X | X | | | | Quarterly |
| Operation of safeties and alarms | | X | | | X | Semiannually |
| Boxes, panels, and cabinets | | | | X | | Semiannually |
| Circuit breakers or fuses | X | X | | | | Monthly |
| Circuit breakers or fuses | | | X | | | Biennially |
| Voltmeter and ammeter for accuracy (5%) | | X | | | | Annually |
| Any corrosion on printed circuit boards (PCBs) | X | | | | | Annually |
| Any cracked cable/wire insulation | X | | | | | Annually |
| Any leaks in plumbing parts | X | | | | | Annually |
| Any signs of water on electrical parts | X | | | | | Annually |

(2) Pump test device(s)
(3) Pump relief valve and piping (where maximum pump discharge pressure exceeds the rating of the system components or the driver is of variable speed)
(4) Alarm sensors and indicators
(5) Right-angle gear sets (for engine-driven vertical shaft turbine pumps)
(6) Pressure maintenance (jockey) pump and accessories

**8.1.6 Water Supply to Pump Suction.**

**8.1.6.1** The suction supply for the fire pump shall provide the required flow at a gauge pressure of 0 psi (0 bar) or higher at the pump suction flange to meet the system demand.

**8.1.6.2** Those installations for which NFPA 20, *Standard for the Installation of Stationary Pumps for Fire Protection*, permitted negative suction gauge pressures at the time of pump installation, where the system demand still can be met by the pump and water supply, shall be considered to be in compliance with 8.1.6.

**8.1.7 Energy Source.** The energy sources for the pump driver shall supply the necessary brake horsepower of the driver so that the pump meets system demand.

**8.1.8 Driver.** The pump driver shall not overload beyond its rating (including any service factor allowance) when delivering the necessary brake horsepower.

Copyright 2015 National Fire Protection Association (NFPA). Licensed, by agreement, for individual use and download on October 23, 2015 to VETERANS AFFAIRS. No other reproduction or transmission in any form permitted without written permission of NFPA. For inquires or to report unauthorized use, contact licensing@nfpa.org.



**Table 8.1.1.2 Summary of Fire Pump Inspection, Testing, and Maintenance**

| Item | Frequency | Reference |
|---|---|---|
| **Inspection** | | |
| Pump house, heating ventilating louvers | Weekly | 8.2.2(1) |
| Fire pump system | Weekly | 8.2.2 |
| **Test** | | |
| Pump operation | | |
| No-flow condition | | 8.3.1 |
| Diesel engine–driven fire pump | Weekly | |
| Electric motor–driven fire pump | See 8.3.1.2 | |
| Flow condition | Annually | 8.3.3 |
| Fire pump alarm signals | Annually | 8.3.3.5 |
| **Maintenance** | | |
| Hydraulic | Annually | 8.5 |
| Mechanical transmission | Annually | 8.5 |
| Electrical system | Varies | 8.5 |
| Controller, various components | Varies | 8.5 |
| Motor | Annually | 8.5 |
| Diesel engine system, various components | Varies | 8.5 |

**8.1.9* Controller.** Automatic and manual controllers for applying the energy source to the driver shall be capable of providing this operation for the type of pump used.

**8.1.10 Impairments.** The procedures outlined in Chapter 15 shall be followed where an impairment to protection occurs.

**8.2 Inspection.**

**8.2.1** The purpose of inspection shall be to verify that the pump assembly appears to be in operating condition and is free from physical damage.

**8.2.2*** The pertinent visual observations specified in the following checklists shall be performed weekly:

(1) Pump house conditions as follows:
  (a) Heat is adequate, not less than 40°F (4°C) for pump room with diesel engine–driven pumps with engine heaters.
  (b) Heat is adequate, not less than 70°F (21°C) for pump room with diesel engine–driven pumps without engine heaters.
  (c) Ventilating louvers are free to operate.

(2) Pump system conditions as follows:
  (a) Pump suction and discharge and bypass valves are fully open.
  (b) Piping is free of leaks.
  (c) Suction line pressure gauge reading is within acceptable range.
  (d) System line pressure gauge reading is within acceptable range.
  (e) Suction reservoir has the required water level.
  (f) Wet pit suction screens are unobstructed and in place.
  (g) Waterflow test valves are in the closed position.

(3) Electrical system conditions as follows:
  (a) Controller pilot light (power on) is illuminated.
  (b) Transfer switch normal pilot light is illuminated.
  (c) Isolating switch is closed — standby (emergency) source.
  (d) Reverse phase alarm pilot light is off, or normal phase rotation pilot light is on.
  (e) Oil level in vertical motor sight glass is within acceptable range.
  (f) Power to pressure maintenance (jockey) pump is provided.

(4) Diesel engine system conditions as follows:
  (a) Fuel tank is at least two-thirds full.
  (b) Controller selector switch is in auto position.
  (c) Batteries' (2) voltage readings are within acceptable range.
  (d) Batteries' (2) charging current readings are within acceptable range.
  (e) Batteries' (2) pilot lights are on or battery failure (2) pilot lights are off.
  (f) All alarm pilot lights are off.
  (g) Engine running time meter is reading.
  (h) Oil level in right angle gear drive is within acceptable range.
  (i) Crankcase oil level is within acceptable range.
  (j) Cooling water level is within acceptable range.
  (k) Electrolyte level in batteries is within acceptable range.
  (l) Battery terminals are free from corrosion.
  (m) Water-jacket heater is operating.

(5) *Steam system conditions: Steam pressure gauge reading is within acceptable range.

**8.3* Testing.**

**8.3.1 Frequency.**

**8.3.1.1*** A non-flow test shall be conducted for diesel engine–driven fire pumps without recirculating water back to the pump suction on a test frequency in accordance with 8.3.1.1.1 or 8.3.1.1.2.

**8.3.1.1.1** Except as permitted in 8.3.1.1.2, a weekly test frequency shall be required.

**8.3.1.1.2*** The test frequency shall be permitted to be established by an approved risk analysis.

Copyright 2015 National Fire Protection Association (NFPA). Licensed, by agreement, for individual use and download on October 23, 2015 to VETERANS AFFAIRS. No other reproduction or transmission in any form permitted without written permission of NFPA. For inquires or to report unauthorized use, contact licensing@nfpa.org.



**8.3.1.2*** A non-flow test shall be conducted for electric motor–driven fire pumps without recirculating water back to the pump suction on a test frequency in accordance with 8.3.1.2.1, 8.3.1.2.2, 8.3.1.2.3, or 8.3.1.2.4.

**8.3.1.2.1** Except as permitted in 8.3.1.2.2 and 8.3.1.2.3, a weekly test frequency shall be required for the following electric fire pumps:

(1) Fire pumps that serve fire protection systems in high rise buildings that are beyond the pumping capacity of the fire department
(2) Fire pumps with limited service controllers
(3) Vertical turbine fire pumps
(4) Fire pumps taking suction from ground level tanks or a water source that does not provide sufficient pressure to be of material value without the pump

**8.3.1.2.2** A monthly test frequency shall be permitted for electric fire pumps not identified in 8.3.1.2.1.

**8.3.1.2.3*** A monthly test frequency shall be permitted for electric fire pump systems having a redundant fire pump.

**8.3.1.2.4*** The test frequency shall be permitted to be established by an approved risk analysis.

**8.3.2 No-Flow Condition.**

**8.3.2.1** A test of fire pump assemblies shall be conducted without flowing water.

**8.3.2.2** The test shall be conducted by starting the pump automatically.

**8.3.2.3** The electric pump shall run a minimum of 10 minutes.

**8.3.2.4** The diesel pump shall run a minimum of 30 minutes.

**8.3.2.5** A valve installed to open as a safety feature shall be permitted to discharge water.

**8.3.2.6** An automatic timer that meets 8.3.2.6.1 through 8.3.2.6.3 shall be permitted to be substituted for the starting procedure.

**8.3.2.6.1** A solenoid valve drain on the pressure control line shall be the initiating means for a pressure-actuated controller.

**8.3.2.6.2** In a pressure-actuated controller, performance of this program timer shall be recorded as a pressure drop indication on the pressure recorder.

**8.3.2.6.3** In a non-pressure-actuated controller, the test shall be permitted to be initiated by means other than a solenoid valve.

**8.3.2.7** Qualified personnel shall be in attendance whenever the pump is in operation.

**8.3.2.7.1*** The use of the automatic timer allowed in 8.3.2.6 shall not eliminate the requirement of 8.3.2.7 to have qualified personnel present during test.

**8.3.2.8** The pertinent visual observations or adjustments specified in the following checklists shall be conducted while the pump is idle:

(1) Record the system suction and discharge pressure gauge readings
(2) For pumps that use electronic pressure sensors to control the fire pump operation, record the current pressure and the highest and the lowest pressure shown on the fire pump controller event log
(3) If the highest or lowest pressure is outside of the expected range, record all information from the event log that helps identify the abnormality

**8.3.2.9*** The pertinent visual observations or adjustments specified in the following checklists shall be conducted while the pump is running:

(1) Pump system procedure as follows:
  (a) Record the pump starting pressure from the pressure switch or pressure transducer
  (b) Record the system suction and discharge pressure gauge readings
  (c) Inspect the pump packing glands for slight discharge
  (d) Adjust gland nuts if necessary
  (e) Inspect for unusual noise or vibration
  (f) Inspect packing boxes, bearings, or pump casing for overheating
  (g) Record pressure switch or pressure transducer reading and compare to the pump discharge gauge
  (h) For pumps that use electronic pressure sensors to control the fire pump operation, record the current pressure and the highest and the lowest pressure shown on the fire pump controller event log
  (i) For electric motor and radiator cooled diesel pumps, check the circulation relief valve for operation to discharge water
(2) Electrical system procedure as follows:
  (a) Observe the time for motor to accelerate to full speed
  (b) Record the time controller is on first step (for reduced voltage or reduced current starting)
  (c) Record the time pump runs after starting (for automatic stop controllers)
(3) Diesel engine system procedure as follows:
  (a) Observe the time for engine to crank
  (b) Observe the time for engine to reach running speed
  (c) Observe the engine oil pressure gauge, speed indicator, water, and oil temperature indicators periodically while engine is running
  (d) Record any abnormalities
  (e) Inspect the heat exchanger for cooling waterflow
(4) Steam system procedure as follows:
  (a) Record the steam pressure gauge reading
  (b) Observe the time for turbine to reach running speed

**8.3.3 Annual Flow Testing.**

**8.3.3.1*** An annual test of each pump assembly shall be conducted by qualified personnel under no-flow (churn), rated flow, and 150 percent of the pump rated capacity flow of the fire pump by controlling the quantity of water discharged through approved test devices.

**8.3.3.1.1** If available suction supplies do not allow flowing of 150 percent of the rated pump capacity, the fire pump shall be tested to the maximum allowable discharge.

**8.3.3.1.2*** The annual test shall be conducted as described in 8.3.3.1.2.1, 8.3.3.1.2.2, or 8.3.3.1.2.3.

**8.3.3.1.2.1 Use of Pump Discharge via Hose Streams.**

**(A)** Pump suction and discharge pressures and the flow measurements of each hose stream shall determine the total pump output.

Copyright 2015 National Fire Protection Association (NFPA). Licensed, by agreement, for individual use and download on October 23, 2015 to VETERANS AFFAIRS. No other reproduction or transmission in any form permitted without written permission of NFPA. For inquires or to report unauthorized use, contact licensing@nfpa.org.



**(B)** Care shall be taken to prevent water damage by verifying there is adequate drainage for the high pressure water discharge from hoses.

**8.3.3.1.2.2 Use of Pump Discharge via Bypass Flowmeter to Drain or Suction Reservoir.** Pump suction and discharge pressures and the flowmeter measurements shall determine the total pump output.

**8.3.3.1.2.3 Use of Pump Discharge via Bypass Flowmeter to Pump Suction (Closed-Loop Metering).**

**(A)** Pump suction and discharge pressures and the flowmeter measurements shall determine the total pump output.

**(B)** When testing includes recirculating water back to the fire pump suction, the temperature of the recirculating water shall be monitored to verify that it remains below temperatures that could result in equipment damage as defined by the pump and engine manufacturers.

**8.3.3.1.3** Where the annual test is conducted periodically in accordance with 8.3.3.1.2.3, a test shall be conducted every 3 years in accordance with 8.3.3.1.2.1 or 8.3.3.1.2.2 in lieu of the method described in 8.3.3.1.2.3.

**8.3.3.1.4** Where 8.3.3.1.2.2 or 8.3.3.1.2.3 is used, the flowmeter shall be adjusted immediately prior to conducting the test in accordance with the manufacturer's instructions.

**8.3.3.1.4.1** If the test results are not consistent with the previous annual test, 8.3.3.1.2.1 shall be used.

**8.3.3.1.4.2** If testing in accordance with 8.3.3.1.2.1 is not possible, a flowmeter calibration shall be performed and the test shall be repeated.

**8.3.3.2** The pertinent visual observations, measurements, and adjustments specified in the following checklists shall be conducted annually while the pump is running and flowing water under the specified output condition:

(1) At no-flow condition (churn) as follows:
   (a) Inspect the circulation relief valve for operation to discharge water
   (b) Inspect the pressure relief valve (if installed) for proper operation
(2) At each flow condition as follows:
   (a) Record the electric motor voltage and current (all lines)
   (b) Record the pump speed in rpm
   (c) Record the simultaneous (approximately) readings of pump suction and discharge pressures and pump discharge flow
(3)*For electric motor–driven pumps, do not shut down the pump until it has run for 10 minutes
(4) For diesel motor–driven pumps, do not shut down the pump until it has run for 30 minutes

**8.3.3.3*** For installations having a pressure relief valve, the operation of the relief valve shall be closely observed during each flow condition to determine whether the pump discharge pressure exceeds the normal operating pressure of the system components.

**8.3.3.3.1*** The pressure relief valve shall also be observed during each flow condition to determine whether the pressure relief valve closes at the proper pressure.

**8.3.3.3.2** The pressure relief valve shall be closed during flow conditions if necessary to achieve minimum rated characteristics for the pump and reset to normal position at the conclusion of the pump test.

**8.3.3.3.2.1** When it is necessary to close the relief valve to achieve minimum rated characteristics for the pump, the pump discharge control valve shall be closed if the pump churn pressure exceeds the system rated pressure.

**8.3.3.3.3** When pressure relief valves are piped back to the fire pump suction, the temperature of the recirculating water shall be monitored to verify that it remains below temperatures that could result in equipment damage as defined by the pump and engine manufacturers.

**8.3.3.4** For installations having an automatic transfer switch, the following test shall be performed to ensure that the overcurrent protective devices (i.e., fuses or circuit breakers) do not open:

(1) Simulate a power failure condition while the pump is operating at peak load
(2) Verify that the transfer switch transfers power to the alternate power source
(3) Verify that the pump continues to perform at peak horsepower load on the alternate power source for 10 minutes for an alternate utility or 30 minutes if the alternate power source is a standby generator set
(4) Remove the power failure condition and verify that, after a time delay, the pump is reconnected to the normal power source

**8.3.3.5*** Alarm conditions shall be simulated by activating alarm circuits at alarm sensor locations, and all such local or remote alarm indicating devices (visual and audible) shall be observed for operation.

**8.3.3.6* Safety.** Section 4.9 shall be followed for safety requirements while working near electric motor–driven fire pumps.

**8.3.3.7* Suction Screens.** After the waterflow portions of the annual test or fire protection system activations, the suction screens shall be inspected and cleared of any debris or obstructions.

**8.3.3.8*** Where engines utilize electronic fuel management control systems, the backup electronic control module (ECM) and the primary and redundant sensors for the ECM shall be tested annually.

**8.3.4 Diesel Fuel Testing and Maintenance.**

**8.3.4.1** Diesel fuel shall be tested for degradation no less than annually.

**8.3.4.1.1*** Fuel degradation testing shall comply with ASTM D 975-11b, *Standard Specification for Diesel Fuel Oils,* or ASTM D 6751-11b, *Standard Specification for Biodiesel Fuel Blend Stock (B100) for Middle Distillate Fuels,* as approved by the engine manufacturer, using ASTM D 7462-11, *Standard Test Method for Oxidation Stability of Biodiesel (B100) and Blends of Biodiesel with Middle Distillate Petroleum Fuel (Accelerated Method).*

**8.3.4.2*** If diesel fuel is found to be deficient in the testing required in 8.3.4.1.1, the fuel shall be reconditioned or replaced, the supply tank shall be cleaned internally, and the engine fuel filter(s) shall be changed.

**8.3.4.2.1** After the restoration of the fuel and tank in 8.3.4.2, the fuel shall be retested every 6 months until experience indicates the fuel can be stored for a minimum of 1 year without degradation beyond that allowed in 8.3.4.1.1.

Copyright 2015 National Fire Protection Association (NFPA). Licensed, by agreement, for individual use and download on October 23, 2015 to VETERANS AFFAIRS. No other reproduction or transmission in any form permitted without written permission of NFPA. For inquires or to report unauthorized use, contact licensing@nfpa.org.



**8.3.4.3** When provided, active fuel maintenance systems shall be listed for fire pump service.

**8.3.4.3.1** Maintenance of active fuel maintenance systems shall be in accordance with the manufacturer's recommendations.

**8.3.4.3.2** Maintenance of active fuel maintenance systems shall be performed at a minimum annual frequency for any portion of the system that the manufacturer does not provide a recommended maintenance frequency.

**8.3.4.3.3** Fuel additives shall be used and maintained in accordance with the active fuel maintenance system manufacturer's recommendations.

**8.3.5 Positive Displacement Pumps. [20:14.2.6.4.3]**

**8.3.5.1** Except as provided in 8.3.5.1 through 8.3.5.7, positive displacement pumps shall be tested in accordance with 8.3.1 through 8.3.3.

**8.3.5.2** The pump flow for positive displacement pumps shall be tested and determined to meet the specified rated performance criteria where only one performance point is required to establish positive displacement pump acceptability. [**20:**14.2.6.4.3.1]

**8.3.5.3** The pump flow test for positive displacement pumps shall be accomplished using a flowmeter or orifice plate installed in a test loop back to the supply tank, to the inlet side of a positive displacement water pump, or to drain. [**20:**14.2.6.4.3.2]

**8.3.5.4** The flowmeter reading or discharge pressure shall be recorded and shall be in accordance with the pump manufacturer's flow performance data. [**20:**14.2.6.4.3.3]

**8.3.5.5** If orifice plates are used, the orifice size and corresponding discharge pressure to be maintained on the upstream side of the orifice plate shall be made available to the authority having jurisdiction. [**20:**14.2.6.4.3.4]

**8.3.5.6** Flow rates shall be as specified while operating at the system design pressure. Tests shall be performed in accordance with HI 3.6, *Rotary Pump Tests*. [**20:**14.2.6.4.3.5]

**8.3.5.7** Positive displacement pumps intended to pump liquids other than water shall be permitted to be tested with water; however, the pump performance will be affected, and manufacturer's calculations shall be provided showing the difference in viscosity between water and the system liquid. [**20:**14.2.6.4.3.6]

**8.3.6 Other Tests.**

**8.3.6.1** Engine generator sets supplying emergency or standby power to fire pump assemblies shall be tested routinely in accordance with NFPA 110, *Standard for Emergency and Standby Power Systems*.

**8.3.6.2** Automatic transfer switches shall be tested routinely and exercised in accordance with NFPA 110.

**8.3.6.3** Tests of appropriate environmental pump room space conditions (e.g., heating, ventilation, illumination) shall be made to ensure proper manual or automatic operation of the associated equipment.

**8.3.6.4*** Parallel and angular alignment of the pump and driver shall be inspected during the annual test, and any misalignment shall be corrected.

**8.3.7 Test Results and Evaluation.**

**8.3.7.1* Interpretation.**

**8.3.7.1.1** The interpretation of the test results shall be the basis for determining performance of the pump assembly.

**8.3.7.1.2** Qualified individuals shall interpret the test results.

**8.3.7.2 Engine Speed.**

**8.3.7.2.1** Theoretical factors for correction to the rated speed shall be applied where determining the compliance of the pump per the test.

**8.3.7.2.2** Increasing the engine speed beyond the rated speed of the pump at rated condition shall not be permitted as a method for meeting the rated pump performance.

**8.3.7.3** The fire pump assembly shall be considered acceptable if either of the following conditions is shown during the test:

(1)*The test is no less than 95 percent of the pressure at rated flow and rated speed of the initial unadjusted field acceptance test curve, provided that the original acceptance test curve matches the original certified pump curve by using theoretical factors.
(2) The fire pump is no less than 95 percent of the performance characteristics as indicated on the pump nameplate.

**8.3.7.4*** Degradation in excess of 5 percent of the pressure of the initial unadjusted acceptance test curve or nameplate shall require an investigation to reveal the cause of degraded performance.

**8.3.7.5** Current and voltage readings whose product does not exceed the product of the rated voltage and rated full-load current multiplied by the permitted motor service factor shall be considered acceptable.

**8.3.7.6** Voltage readings at the motor within 5 percent below or 10 percent above the rated (i.e., nameplate) voltage shall be considered acceptable.

**8.3.7.7** The pump performance shall be evaluated using the unadjusted flow rates and pressures to ensure the pump can supply the system demand as supplied by the owner.

**8.4 Reports.**

**8.4.1** Any abnormality observed during inspection or testing shall be reported promptly to the property owner or designated representative.

**8.4.2** Test results and any documented performance issues shall be recorded and retained for comparison purposes in accordance with Section 4.3.

**8.4.3** All time delay intervals associated with the pump's starting, stopping, and energy source transfer shall be recorded.

**8.5 Maintenance.**

**8.5.1*** A preventive maintenance program shall be established on all components of the pump assembly in accordance with the manufacturer's recommendations or Table 8.1.2.

**8.5.2** Records shall be maintained on all work performed on the pump, driver, controller, and auxiliary equipment.

**8.5.3** The preventive maintenance program shall be initiated immediately after the pump assembly has passed acceptance tests.

**8.6 Component Replacement Testing Requirements.**

**8.6.1** Whenever a component in a fire pump is adjusted, repaired, rebuilt, or replaced, the tests required to restore the system to service shall be performed in accordance with Table 8.6.1.

Copyright 2015 National Fire Protection Association (NFPA). Licensed, by agreement, for individual use and download on October 23, 2015 to VETERANS AFFAIRS. No other reproduction or transmission in any form permitted without written permission of NFPA. For inquires or to report unauthorized use, contact licensing@nfpa.org.



**Table 8.6.1 Summary of Component Replacement Testing Requirements**

| Component | Adjust | Repair | Rebuild | Replace | Test Criteria |
|---|---|---|---|---|---|
| **Fire Pump System** | | | | | |
| Entire pump assembly | | | | X | Perform acceptance test in accordance with NFPA 20, *Standard for the Installation of Stationary Pumps for Fire Protection* |
| Impeller/rotating assembly | | X | | X | Perform acceptance test in accordance with NFPA 20 |
| Casing | | X | | X | Perform acceptance test in accordance with NFPA 20 with alignment inspection |
| Bearings | | | | X | Perform annual test in accordance with 8.3.3 |
| Sleeves | | | | X | Perform annual test in accordance with 8.3.3 |
| Wear rings | | | | X | Perform annual test in accordance with 8.3.3 |
| Main shaft | | X | | X | Perform annual test in accordance with 8.3.3 |
| Packing | X | | | X | Perform test in accordance with 8.3.2 |
| **Mechanical Transmission** | | | | | |
| Gear right angle drives | | X | X | X | Perform acceptance test in accordance with NFPA 20 |
| Drive coupling | X | X | X | X | Perform test in accordance with 8.3.3 with alignment inspection (ROC 112] |
| **Electrical System/Controller** | | | | | |
| Entire controller | | | | X | Perform acceptance test in accordance with NFPA 20 |
| Electronic component or module that can prevent the controller from starting or running | | | X | X | Perform acceptance test in accordance with NFPA 20 |
| Electronic component or module that will not prevent the controller from starting or running | | | X | X | Perform weekly test in accordance with NFPA 25 |
| Plumbing part | | | | X | Perform weekly test in accordance with NFPA 25 |
| Isolating switch | | | | X | Perform test in accordance with 8.3.2 and exercise six times |
| Circuit breaker | X | | | | Perform six momentary starts in accordance with NFPA 20 |
| Circuit breaker | | | | X | Perform a 1-hour full-load current test in accordance with 8.3.3, including six starts at peak load |
| Electrical connections | X | | | | Perform test in accordance with 8.3.2 |
| Main contactor | | X | | X | Perform test in accordance with 8.3.3 with six starts |
| Power monitor | | | | X | Perform six operations of the circuit breaker/isolation switch disconnect (cycle the power on/off) |
| Start relay | | | | X | Perform test in accordance with 8.3.2 with six starts |
| Pressure switch | X | | | X | Perform test in accordance with 8.3.2 and exercise six times automatically |
| Pressure transducer | X | | | X | Perform six automatic no-load starts |
| Manual start or stop switch | | | | X | Perform six operations under load |
| Transfer switch — load carrying parts | | X | X | X | Perform a 1-hour full-load current test, six starts at peak horsepower load, and transfer from normal power to emergency power and back one time |
| Transfer switch — no-load parts | | X | X | X | Perform six no-load operations of transfer of power |

Copyright 2015 National Fire Protection Association (NFPA). Licensed, by agreement, for individual use and download on October 23, 2015 to VETERANS AFFAIRS. No other reproduction or transmission in any form permitted without written permission of NFPA. For inquires or to report unauthorized use, contact licensing@nfpa.org.



**Table 8.6.1** *Continued*

| Component | Adjust | Repair | Rebuild | Replace | Test Criteria |
|---|---|---|---|---|---|
| **Electric Motor Driver** | | | | | |
| Electric motor | | X | X | X | Perform acceptance test in accordance with 8.3.3, including alignment tests |
| Motor bearings | | | | X | Perform annual test in accordance with 8.3.3 |
| Incoming power conductors | | | | X | Perform a 1-hour full-load current test including six starts at peak load |
| **Diesel Engine Driver** | | | | | |
| Entire engine | | | X | X | Perform acceptance test in accordance with NFPA 20 |
| Fuel transfer pump | X | | X | X | Perform test in accordance with 8.3.2 |
| Fuel injector pump or ECM | X | | | X | Perform test in accordance with 8.3.3 |
| Fuel system filter | | X | | X | Perform test in accordance with 8.3.2 |
| Combustion air intake system | | X | | X | Perform test in accordance with 8.3.2 |
| Fuel tank | | X | | X | Perform test in accordance with 8.3.2 |
| Cooling system | | X | X | X | Perform test in accordance with 8.3.3 |
| Batteries | | X | | X | Perform start/stop sequence in accordance with NFPA 25 |
| Battery charger | | X | | X | Perform test in accordance with 8.3.2 |
| Electric system | | X | | X | Perform test in accordance with 8.3.2 |
| Lubrication filter/oil service | | X | | X | Perform test in accordance with 8.3.2 |
| **Steam Turbines** | | | | | |
| Steam turbine | | X | | X | Perform acceptance test in accordance with NFPA 20 |
| Steam regulator or source upgrade | | X | | X | Perform acceptance test in accordance with NFPA 20 |
| **Positive Displacement Pumps** | | | | | |
| Entire pump | | | | X | Perform acceptance test in accordance with NFPA 20 |
| Rotors | | | | X | Perform annual test in accordance with 8.3.3 |
| Plungers | | | | X | Perform annual test in accordance with 8.3.3 |
| Shaft | | | | X | Perform annual test in accordance with 8.3.3 |
| Driver | | X | X | X | Perform acceptance test in accordance with NFPA 20 |
| Bearings | | | | X | Perform annual test in accordance with 8.3.3 |
| Seals | | | | X | Perform test in accordance with 8.3.2 |
| **Pump House and Miscellaneous Components** | | | | | |
| Baseplate | | X | | | Perform test in accordance with 8.3.2 with alignment inspection |
| Baseplate | | | | X | Perform test in accordance with 8.3.3 with alignment inspection |
| Foundation | | X | X | X | Perform test in accordance with 8.3.2 with alignment inspection |
| Suction/discharge pipe | | X | | X | Perform visual inspection in accordance with 8.2.2 |
| Suction/discharge fittings | | X | | X | Perform visual inspection in accordance with 8.2.2 |
| Suction/discharge valves | | X | X | X | Perform operational test in accordance with 13.3.3.1 |

Copyright 2015 National Fire Protection Association (NFPA). Licensed, by agreement, for individual use and download on October 23, 2015 to VETERANS AFFAIRS. No other reproduction or transmission in any form permitted without written permission of NFPA. For inquires or to report unauthorized use, contact licensing@nfpa.org.



**8.6.2** NFPA 20 shall be consulted for the minimum requirements for design, installation, and acceptance testing.

**8.6.3** Replacement parts shall be provided that will maintain the listing for the fire pump component assembly whenever possible.

**8.6.3.1** If the part is no longer available from the original equipment manufacturer, then an approved like part shall be permitted to be used.

## Chapter 9 Water Storage Tanks

**9.1* General.**

**9.1.1 Minimum Requirements.**

**9.1.1.1** This chapter shall provide the minimum requirements for the routine inspection, testing, and maintenance of water storage tanks dedicated to fire protection use.

**9.1.1.2** Table 9.1.1.2 shall be used to determine the minimum required frequencies for inspection, testing, and maintenance.

**9.1.2 Valves and Connections.** Valves and fire department connections shall be inspected, tested, and maintained in accordance with Chapter 13.

**9.1.3 Obstruction Investigations.** The procedures outlined in Chapter 14 shall be followed where there is a need to conduct an obstruction investigation.

**9.1.4 Impairments.** The procedures outlined in Chapter 15 shall be followed where an impairment to protection occurs.

**9.2 Inspection.**

**9.2.1 Water Level.**

**9.2.1.1*** The water level in tanks equipped with supervised water level alarms that are connected to a constantly attended location shall be inspected quarterly.

**9.2.1.2** The water level in tanks not equipped with supervised water level alarms connected to a constantly attended location shall be inspected monthly.

**9.2.2 Air Pressure.**

**9.2.2.1** The air pressure in pressure tanks that have their air pressure source supervised in accordance with *NFPA 72, National Fire Alarm and Signaling Code*, shall be inspected quarterly.

**9.2.2.2** The air pressure in pressure tanks with a nonsupervised air pressure source shall be inspected monthly.

**9.2.3 Heating System.**

**9.2.3.1** Tank heating systems installed on tanks equipped with supervised low water temperature alarms that are connected to a constantly attended location shall be inspected weekly.

**9.2.3.2** Tank heating systems without a supervised low temperature alarm connected to a constantly attended location shall be inspected daily during the heating season.

**9.2.4 Water Temperature.**

**9.2.4.1** The temperature of water in tanks shall not be less than 40°F (4.0°C).

**9.2.4.2** The temperature of water in tanks with low temperature alarms connected to a constantly attended location shall be inspected and recorded monthly during the heating season when the mean temperature is less than 40°F (4.0°C).

**9.2.4.3** The temperature of water in tanks without low temperature alarms connected to a constantly attended location shall be inspected and recorded weekly during the heating season when the mean temperature is less than 40°F (4.0°C).

**9.2.5 Exterior Inspection.**

**9.2.5.1*** The exterior of the tank, supporting structure, vents, foundation, and catwalks or ladders, where provided, shall be inspected quarterly for signs of obvious damage or weakening.

**9.2.5.2** The area surrounding the tank and supporting structure, where provided, shall be inspected quarterly to ensure that the following conditions are met:

(1) The area is free of combustible storage, trash, debris, brush, or material that could present a fire exposure hazard.
(2) The area is free of the accumulation of material on or near parts that could result in accelerated corrosion or rot.
(3) The tank and support are free of ice buildup.
(4) The exterior sides and top of embankments supporting coated fabric tanks are free of erosion.

**9.2.5.3** Expansion joints, where provided, shall be inspected annually for leaks and cracks.

**9.2.5.4** The hoops and grillage of wooden tanks shall be inspected annually.

**9.2.5.5** Exterior painted, coated, or insulated surfaces of the tank and supporting structure, where provided, shall be inspected annually for signs of degradation.

**9.2.6 Interior Inspection.**

**9.2.6.1 Frequency.**

**9.2.6.1.1*** The interior of steel tanks without corrosion protection shall be inspected every 3 years.

**9.2.6.1.2*** The interior of all other types of tanks shall be inspected every 5 years.

**9.2.6.2** Where interior inspection is made by means of underwater evaluation, silt shall first be removed from the tank floor.

**9.2.6.3** The tank interior shall be inspected for signs of pitting, corrosion, spalling, rot, other forms of deterioration, waste materials and debris, aquatic growth, and local or general failure of interior coating.

**9.2.6.4** Steel tanks exhibiting signs of interior pitting, corrosion, or failure of coating shall be tested in accordance with 9.2.7.

**9.2.6.5*** Tanks on ring-type foundations with sand in the middle shall be inspected for evidence of voids beneath the floor.

**9.2.6.6** The heating system and components including piping shall be inspected.

**9.2.6.7** The anti-vortex plate shall be inspected for deterioration or blockage.

Copyright 2015 National Fire Protection Association (NFPA). Licensed, by agreement, for individual use and download on October 23, 2015 to VETERANS AFFAIRS. No other reproduction or transmission in any form permitted without written permission of NFPA. For inquires or to report unauthorized use, contact licensing@nfpa.org.



**Table 9.1.1.2 Summary of Water Storage Tank Inspection, Testing, and Maintenance**

| Item | Frequency | Reference |
|---|---|---|
| **Inspection** | | |
| Water temperature — low temperature alarms connected to constantly attended location | Monthly | 9.2.4.2 |
| Water temperature — low temperature alarms not connected to constantly attended location | Weekly | 9.2.4.3 |
| Heating system — tanks with supervised low temperature alarms connected to constantly attended location | Weekly* | 9.2.3.1 |
| Heating system — tanks without supervised low temperature alarms connected to constantly attended location | Daily* | 9.2.3.2 |
| Control valves | | Table 13.1.1.2 |
| Water level — tanks equipped with supervised water level alarms connected to constantly attended location | Quarterly | 9.2.1.1 |
| Water level — tanks without supervised water level alarms connected to constantly attended location | Monthly | 9.2.1.2 |
| Air pressure — tanks that have their air pressure source supervised | Quarterly | 9.2.2.1 |
| Air pressure — tanks without their air pressure source supervised | Monthly | 9.2.2.2 |
| Tank — exterior | Quarterly | 9.2.5.1 |
| Support structure | Quarterly | 9.2.5.1 |
| Catwalks and ladders | Quarterly | 9.2.5.1 |
| Surrounding area | Quarterly | 9.2.5.2 |
| Hoops and grillage | Annually | 9.2.5.4 |
| Painted/coated surfaces | Annually | 9.2.5.5 |
| Expansion joints | Annually | 9.2.5.3 |
| Interior — tanks without corrosion protection | 3 years | 9.2.6.1.1 |
| Interior — all other tanks | 5 years | 9.2.6.1.2 |
| Temperature alarms — connected to constantly attended location | Monthly* | 9.2.4.2 |
| Temperature alarms — not connected to constantly attended location | Weekly* | 9.2.4.3 |
| Check valves | | Table 13.1.1.2 |
| **Test** | | |
| Tank heating system | Prior to heating season | 9.3.2 |
| Low water temperature alarms | Monthly* | 9.3.3 |
| High temperature limit switches | Monthly* | 9.3.4 |
| Water level alarms | Semiannually | 9.3.5 |
| Level indicators | 5 years | 9.3.1 |
| Pressure gauges | 5 years | 9.3.6 |
| Valve status test | | 13.3.1.2.2.1 |
| **Maintenance** | | |
| Water level | — | 9.4.2 |
| Control valves | — | Table 13.1.1.2 |
| Embankment-supported coated fabric (ESCF) | — | 9.4.6 |
| Check valves | — | 13.4.2.2 |

*Cold weather/heating season only.

**9.2.7 Tests During Interior Inspection.** Where a drained interior inspection of a steel tank is required by 9.2.6.4, the following tests shall be conducted:

(1) Evaluation of tank coatings shall be made in accordance with the adhesion test of ASTM D 3359, *Standard Test Methods for Measuring Adhesion by Tape Test*, generally referred to as the "cross-hatch test."

(2) Dry film thickness measurements shall be taken at random locations to determine the overall coating thickness.

(3) Nondestructive ultrasonic readings shall be taken to evaluate the wall thickness where there is evidence of pitting or corrosion.

(4) Interior surfaces shall be spot wet-sponge tested to detect pinholes, cracks, or other compromises in the coating.

Copyright 2015 National Fire Protection Association (NFPA). Licensed, by agreement, for individual use and download on October 23, 2015 to VETERANS AFFAIRS. No other reproduction or transmission in any form permitted without written permission of NFPA. For inquires or to report unauthorized use, contact licensing@nfpa.org.



Special attention shall be given to sharp edges such as ladder rungs, nuts, and bolts.

(5) Tank bottoms shall be tested for metal loss and/or rust on the underside by use of ultrasonic testing where there is evidence of pitting or corrosion. Removal, visual inspection, and replacement of random floor coupons shall be an acceptable alternative to ultrasonic testing.

(6) Tanks with flat bottoms shall be vacuum-box tested at bottom seams in accordance with test procedures found in NFPA 22, *Standard for Water Tanks for Private Fire Protection.*

**9.3 Testing.**

**9.3.1*** Level indicators shall be tested every 5 years for accuracy and freedom of movement.

**9.3.2** The tank heating system, where provided, shall be tested prior to the heating season to make certain it is in the proper working order.

**9.3.3** Low water temperature signals, where provided, shall be tested monthly (cold weather only).

**9.3.4*** High water temperature limit switches on tank heating systems, where provided, shall be tested monthly whenever the heating system is in service.

**9.3.5*** High and low water level signals shall be tested semiannually.

**9.3.6* Pressure Gauges.**

**9.3.6.1** Pressure gauges shall be tested every 5 years with a calibrated gauge in accordance with the manufacturer's instructions.

**9.3.6.2** Gauges not accurate to within 3 percent of the scale of the gauge being tested shall be recalibrated or replaced.

**9.4 Maintenance.**

**9.4.1** Voids discovered beneath the floors of tanks shall be filled by pumping in grout or accessing the sand and replenishing.

**9.4.2** The tank shall be maintained full or at the designed water level.

**9.4.3** The hatch covers in the roofs and the door at the top of the frostproof casing shall always be kept securely fastened with substantial catches as a protection against freezing and windstorm damage.

**9.4.4** No waste materials, such as boards, paint cans, trim, or loose material, shall be left in the tank or on the surface of the tank.

**9.4.5** Silt shall be removed during interior inspections or more frequently as needed to avoid accumulation to the level of the tank outlet.

**9.4.6 Maintenance of Embankment-Supported Coated Fabric (ESCF) Suction Tanks.**

**9.4.6.1** The maintenance of ESCF tanks shall be completed in accordance with this section and the tank manufacturer's instructions.

**9.4.6.2** The exposed surfaces of ESCF tanks shall be cleaned and painted every 2 years or in accordance with the manufacturer's instructions.

**9.5 Automatic Tank Fill Valves.**

**9.5.1 Inspection.**

**9.5.1.1** Automatic tank fill valves shall be inspected in accordance with Table 9.5.1.1.

**Table 9.5.1.1 Summary of Automatic Tank Fill Valve Inspection and Testing**

| Item | Frequency | Reference |
|---|---|---|
| **Inspection** | | |
| Strainers, filters, orifices (inspect/clean) | 5 years | 13.4.1.2 |
| Enclosure (during cold weather) | Daily/weekly | 13.4.3.1.1 |
| Exterior | Monthly | 13.4.3.1.6 |
| Interior | Annually/5 years | 13.4.3.1.7 |
| **Test** | | |
| Automatic tank fill valve | Annually | |

**9.5.1.1.1** OS&Y isolation valves that are a part of the automatic fill valves shall be inspected in accordance with Chapter 13.

**9.5.1.2** Valves secured with locks or electrically supervised in accordance with applicable NFPA standards shall be inspected monthly.

**9.5.1.3** The enclosure shall be inspected to verify that it is heated and secured.

**9.5.2 Maintenance.**

**9.5.2.1** Maintenance of all automatic tank fill valves shall be conducted by a qualified person following the manufacturer's instructions in accordance with the procedure and policies of the authority having jurisdiction.

**9.5.2.2** Rubber parts shall be replaced in accordance with the frequency required by the authority having jurisdiction and the manufacturer's instructions.

**9.5.2.3** Strainers shall be cleaned quarterly.

**9.5.3 Testing.** All automatic tank fill valves shall be tested yearly in accordance with the following:

(1) The valve shall be actuated automatically by lowering the water level in the tank.

(2) The refill rate shall be measured and recorded.

**9.6 Component Action Requirements.**

**9.6.1** Whenever a component in a water storage tank is adjusted, repaired, reconditioned, or replaced, the action required in Table 9.6.1 shall be performed.

**9.6.2** Where the original installation standard is different from the cited standard, the use of the appropriate installing standard shall be permitted.

**9.6.3** These actions shall not require a design review, which is outside the scope of this standard.

Copyright 2015 National Fire Protection Association (NFPA). Licensed, by agreement, for individual use and download on October 23, 2015 to VETERANS AFFAIRS. No other reproduction or transmission in any form permitted without written permission of NFPA. For inquires or to report unauthorized use, contact licensing@nfpa.org.



**Table 9.6.1 Summary of Component Replacement Action Requirements**

| Component | Adjust | Repair/ Recondition | Replace | Test Criteria |
|---|---|---|---|---|
| **Tank Components** | | | | |
| Tank interior | | X | X | Remove debris<br>Verify integrity in conformance with NFPA 22, *Standard for Water Tanks for Private Fire Protection* |
| Tank exterior | | X | X | Verify integrity in conformance with NFPA 22 |
| Support structure | | X | X | Verify integrity in conformance with NFPA 22 |
| Heating system | X | X | X | Verify heating system is in conformance with NFPA 22 |
| Catwalks and ladders | X | X | X | Verify integrity in conformance with NFPA 22 |
| Hoops and grillage | X | X | X | Verify integrity in conformance with NFPA 22 |
| Expansion joints | X | X | X | Verify integrity in conformance with NFPA 22 |
| Overflow piping | X | X | X | Verify integrity in conformance with NFPA 22 |
| Insulation | | X | X | Verify integrity in conformance with NFPA 22 |
| **Alarm and Supervisory Components** | | | | |
| High and low water level | X | X | X | Operational test for conformance with NFPA 22 and/or *NFPA 72*, *National Fire Alarm and Signaling Code*, and the design water levels |
| Water temperature | X | X | X | Operational test for conformance with NFPA 22 and/or *NFPA 72* |
| Enclosure temperature | X | X | X | Operational test for conformance with NFPA 22 and/or *NFPA 72* |
| Valve supervision | X | X | X | Operational test for conformance with NFPA 22 and/or *NFPA 72* |
| **Fill and Discharge Components** | | | | |
| Automatic fill valves | | | | See Chapter 13 |
| Valves | X | X | X | See Chapter 13 |
| **Status Indicators** | | | | |
| Level indicators | X | X | X | Verify conformance with NFPA 22 |
| Pressure gauges | | | X | Verify at 0 psi (0 bar) and at system working pressure |

## Chapter 10 Water Spray Fixed Systems

**10.1* General.**

**10.1.1 Minimum Requirements.**

**10.1.1.1** This chapter shall provide the minimum requirements for the routine inspection, testing, and maintenance of water spray protection from fixed nozzle systems only.

**10.1.1.2** Table 10.1.1.2 shall be used to determine the minimum required frequencies for inspection, testing, and maintenance.

**10.1.2 Water Spray Protection.** This chapter shall not cover water spray protection from portable nozzles, sprinkler systems, monitor nozzles, or other means of application.

**10.1.3* Design and Installation.** NFPA 15, *Standard for Water Spray Fixed Systems for Fire Protection*, shall be consulted to determine the requirements for design and installation, including acceptance testing.

**10.1.4 Obstruction Investigations.** The procedures outlined in Chapter 14 shall be followed where there is a need to conduct an obstruction investigation.

**10.1.5 Valves and Connections.** Valves and fire department connections shall be inspected, tested, and maintained in accordance with Chapter 13.

**10.1.6* Impairments.** The procedures outlined in Chapter 15 shall be followed where an impairment to protection occurs.

**10.1.6.1** When a water spray fixed system or any portion thereof is out of service for any reason, notice shall be given to facility management, the local fire department, the on-site fire brigade, and other authorities having jurisdiction, as applicable.

**10.1.6.2** A sign shall be posted at each fire department connection or system control valve indicating which portion of the system is out of service.

**10.2 Inspection and Maintenance Procedures.**

**10.2.1 Components.** The components described in this section shall be inspected and maintained at the frequency specified in Table 10.1.1.2 and in accordance with this standard and the manufacturer's instructions.

**10.2.1.1** Items in areas that are inaccessible for safety considerations due to factors such as continuous process operations and energized electrical equipment shall be inspected during each scheduled shutdown but not more than every 18 months.

Copyright 2015 National Fire Protection Association (NFPA). Licensed, by agreement, for individual use and download on October 23, 2015 to VETERANS AFFAIRS. No other reproduction or transmission in any form permitted without written permission of NFPA. For inquires or to report unauthorized use, contact licensing@nfpa.org.



**Table 10.1.1.2 Summary of Water Spray Fixed System Inspection, Testing, and Maintenance**

| Item | Frequency | Reference |
|---|---|---|
| **Inspection** | | |
| Backflow preventer | | Chapter 13 |
| Check valves | | Chapter 13 |
| Control valves | Weekly (sealed) | Chapter 13 |
| Control valves | Monthly (locked, supervised) | Chapter 13 |
| Deluge valve | | 10.2.2, Chapter 13 |
| Detection systems | | *NFPA 72, National Fire Alarm and Signaling Code* |
| Detector check valves | | Chapter 13 |
| Drainage | Quarterly | 10.2.8 |
| Electric motor | | 10.2.9, Chapter 8 |
| Engine drive | | 10.2.9, Chapter 8 |
| Fire pump | | 10.2.9, Chapter 8 |
| Fittings | Quarterly | 10.2.4, 10.2.4.1 |
| Fittings (rubber-gasketed) | Quarterly | 10.2.4.1, A.10.2.4.1 |
| Gravity tanks | | 10.2.10, Chapter 9 |
| Hangers | Annually and after each system activation | 10.2.4.2 |
| Heat (deluge valve house) | Daily/weekly | 10.2.1.5, Chapter 13 |
| Nozzles | Annually and after each system activation | 10.2.1.1, 10.2.1.2, 10.2.1.6, 10.2.5.1, 10.2.5.2 |
| Pipe | Annually and after each system activation | 10.2.1.1, 10.2.1.2, 10.2.4, 10.2.4.1 |
| Pressure tank | | 10.2.10, Chapter 9 |
| Steam driver | | 10.2.9, Chapter 8 |
| Strainers | Manufacturer's instruction | 10.2.7 |
| Suction tanks | | 10.2.10, Chapter 9 |
| Supports | Quarterly | 10.2.1.1, 10.2.1.2, 10.2.4.2 |
| Water supply piping | | 10.2.6.1, 10.2.6.2 |
| UHSWSS — detectors | Monthly | 10.4.2 |
| UHSWSS — controllers | Each shift | 10.4.3 |
| UHSWSS — valves | Each shift | 10.4.4 |
| **Operational Test** | | |
| Backflow preventer | | Chapter 13 |
| Check valves | | Chapter 13 |
| Control valves | Annually | 13.3.3.1 |
| Deluge valve | | 10.2.2, Chapter 13 |
| Detection systems | | *NFPA 72* |
| Detector check valve | | Chapter 13 |
| Electric motor | | 10.2.9, Chapter 8 |
| Engine drive | | 10.2.9, Chapter 8 |
| Fire pump | | 10.2.9, Chapter 8 |
| Flushing | Annually | 10.2.1.3, Section 10.3 (flushing of connection to riser, part of annual test) |
| Gravity tanks | | 10.2.10, Chapter 9 |
| Main drain test | Annually | 13.3.3.4 |
| Manual release | Annually | 10.2.1.3, 10.3.6 |
| Nozzles | Annually | 10.2.1.3, 10.2.1.6, Section 10.3 |
| Pressure tank | | Section 10.2, Chapter 9 |
| Steam driver | | 10.2.9, Chapter 8 |
| Strainers | Annually | 10.2.1.3, 10.2.1.7, 10.2.7 |
| Suction tanks | | 10.2.10, Chapter 9 |
| Waterflow alarm | Quarterly | Chapter 5 |
| Water spray system test | Annually | Section 10.3, Chapter 13 |
| Water supply flow test | | 7.3.1 |
| UHSWSS | Annually | Section 10.4 |
| Valve status test | | 13.3.1.2.1 |
| **Maintenance** | | |
| Backflow preventer | | Chapter 13 |
| Check valves | | Chapter 13 |

Copyright 2015 National Fire Protection Association (NFPA). Licensed, by agreement, for individual use and download on October 23, 2015 to VETERANS AFFAIRS. No other reproduction or transmission in any form permitted without written permission of NFPA. For inquires or to report unauthorized use, contact licensing@nfpa.org.



**Table 10.1.1.2** *Continued*

| Item | Frequency | Reference |
|---|---|---|
| Control valves | Annually | 10.2.1.4, Chapter 13 |
| Deluge valve | | 10.2.2, Chapter 13 |
| Detection systems | | *NFPA 72* |
| Detector check valve | | Chapter 13 |
| Electric motor | | 10.2.9, Chapter 8 |
| Engine drive | | 10.2.9, Chapter 8 |
| Fire pump | | 10.2.9, Chapter 8 |
| Gravity tanks | | 10.2.10, Chapter 9 |
| Pressure tank | | 10.2.6, Chapter 9 |
| Steam driver | | 10.2.9, Chapter 8 |
| Strainers | Annually | 10.2.1.4, 10.2.1.6, 10.2.7 |
| Strainers (baskets/screen) | 5 years | 10.2.1.4, 10.2.1.7, A.10.2.7 |
| Suction tanks | | 10.2.10, Chapter 9 |
| Water spray system | Annually | 10.2.1.4, Chapter 13 |

**10.2.1.2** Inspections shall not be required for items in areas with no provision for access and that are not subject to the conditions noted in 10.2.4.1, 10.2.4.2, and 10.2.5.1.

**10.2.1.3** Items in areas that are inaccessible for safety considerations shall be tested at longer intervals in accordance with 13.4.3.2.2.4.

**10.2.1.4** Other maintenance intervals shall be permitted, depending on the results of the visual inspection and operating tests.

**10.2.1.5** Deluge valve enclosures shall be inspected in accordance with the provisions of Chapter 13.

**10.2.1.6** Nozzle strainers shall be removed, inspected, and cleaned during the flushing procedure for the mainline strainer.

**10.2.1.7** Mainline strainers shall be removed and inspected every 5 years for damaged and corroded parts.

**10.2.2 Deluge Valves.** Deluge valves shall be inspected, tested, and maintained in accordance with Chapter 13.

**10.2.3 Automatic Detection Equipment.**

**10.2.3.1** Automatic detection equipment shall be inspected, tested, and maintained in accordance with *NFPA 72, National Fire Alarm and Signaling Code*.

**10.2.3.2** Automatic fire detection equipment not covered by *NFPA 72* shall be inspected, tested, and maintained to ensure that the detectors are in place, securely fastened, and protected from corrosion, weather, and mechanical damage and that the communication wiring, control panels, or tubing system is functional.

**10.2.4* System Components.** System piping, fittings, hangers, and supports shall be inspected and maintained to ensure continuity of water delivery to the spray nozzles at full waterflow and design pressure.

**10.2.4.1* Piping and Fittings.** System piping and fittings shall be inspected for the following:

(1) Mechanical damage (e.g., broken piping or cracked fittings)
(2) External conditions (e.g., missing or damaged paint or coatings, rust, and corrosion)
(3) Misalignment or trapped sections
(4) Low-point drains (automatic or manual)
(5) Location of rubber-gasketed fittings

**10.2.4.2* Hangers and Supports.** Hangers and supports shall be inspected for the following and repaired or replaced as necessary:

(1) Condition (e.g., missing or damaged paint or coating, rust, and corrosion)
(2) Secure attachment to structural supports and piping
(3) Damaged or missing hangers

**10.2.5* Water Spray Nozzles.**

**10.2.5.1** Water spray nozzles shall be inspected and maintained to ensure that they are in place, continue to be aimed or pointed in the direction intended, and are free from external loading and corrosion.

**10.2.5.2** Where caps or plugs are required, the inspection shall confirm they are in place and free to operate as intended.

**10.2.5.3** Misaligned water spray nozzles shall be adjusted (aimed) by visual means, and the discharge patterns shall be inspected at the next scheduled flow test.

**10.2.6 Water Supply.**

**10.2.6.1** The dependability of the water supply shall be ensured by regular inspection and maintenance, whether furnished by a municipal source, on-site storage tanks, a fire pump, or private underground piping systems.

**10.2.6.2*** Water supply piping shall be maintained free of internal obstructions.

**10.2.7* Strainers.**

**10.2.7.1** Mainline strainers (basket or screen) shall be flushed until clear after each operation or flow test.

**10.2.7.2** Individual water spray nozzle strainers shall be removed, cleaned, and inspected after each operation or flow test.

Copyright 2015 National Fire Protection Association (NFPA). Licensed, by agreement, for individual use and download on October 23, 2015 to VETERANS AFFAIRS. No other reproduction or transmission in any form permitted without written permission of NFPA. For inquires or to report unauthorized use, contact licensing@nfpa.org.



**10.2.7.3** All strainers shall be inspected and cleaned in accordance with the manufacturer's instructions.

**10.2.7.4** Damaged or corroded parts shall be replaced or repaired.

**10.2.8 Drainage.** The area beneath and surrounding a water spray fixed system shall be inspected visually on a quarterly basis to ensure that drainage facilities, such as trap sumps and drainage trenches, are not blocked and retention embankments or dikes are in good repair.

**10.2.9 Fire Pumps.** Chapter 8 shall be followed for inspection and maintenance requirements.

**10.2.10 Water Tanks (Gravity, Pressure, or Suction Tanks, or Reservoirs).** Chapter 9 shall be followed for inspection and maintenance requirements.

**10.3 Operational Tests.**

**10.3.1 Performance.**

**10.3.1.1** Frequency of system tests shall be in accordance with Table 10.1.1.2.

**10.3.1.2** Water spray fixed systems shall be serviced in accordance with this standard and with the manufacturer's instructions.

**10.3.2* Test Preparation.** Precautions shall be taken to prevent damage to property during the test.

**10.3.3 Operational Test Performance.** Operational tests shall be conducted to ensure that the water spray fixed systems respond as designed, both automatically and manually.

**10.3.3.1* Response Time.**

**10.3.3.1.1** Under test conditions, the heat detection systems, where exposed to a heat test source, shall operate within 40 seconds.

**10.3.3.1.2** Under test conditions, the flammable gas detection system, where exposed to a standard test gas concentration, shall operate within the time frame specified in the system design.

**10.3.3.1.3** These response times shall be recorded.

**10.3.3.2 Discharge Time.** The time lapse between operation of detection systems and water delivery time to the protected area shall be recorded.

**10.3.3.3* Discharge Patterns.**

**10.3.3.3.1*** The water discharge patterns from all of the open spray nozzles shall be observed to ensure that patterns are not impeded by plugged nozzles, to ensure that nozzles are correctly positioned, and to ensure that obstructions do not prevent discharge patterns from wetting surfaces to be protected.

**10.3.3.3.1.1** Where the nature of the protected property is such that water cannot be discharged, the nozzles shall be inspected for proper orientation and the system tested with air to ensure that the nozzles are not obstructed.

**10.3.3.3.2** Where obstructions occur, the piping and nozzles shall be cleaned and the system retested.

**10.3.3.4 Pressure Readings.**

**10.3.3.4.1** Pressure readings shall be recorded at the hydraulically most remote nozzle to ensure the waterflow has not been impeded by partially closed valves or by plugged strainers or piping.

**10.3.3.4.2** A second pressure reading shall be recorded at the deluge valve to ensure the water supply is adequate.

**10.3.3.4.3** Readings shall be compared to the hydraulic design pressures to ensure the original system design requirements are met and the water supply is adequate to meet the design requirements.

**10.3.3.4.3.1** Where the hydraulically most remote nozzle is inaccessible, nozzles shall be permitted to be checked visually without taking a pressure reading on the most remote nozzle.

**10.3.3.4.3.2** Where the reading taken at the riser indicates that the water supply has deteriorated, a gauge shall be placed on the hydraulically most remote nozzle and the results compared with the required design pressure.

**10.3.4 Multiple Systems.** The maximum number of systems expected to operate in case of fire shall be tested simultaneously to inspect the adequacy of the water supply.

**10.3.5 Manual Operation.** Manual actuation devices shall be operated annually.

**10.3.6 Return to Service.** After the full flow test, the water spray system shall be maintained and returned to service in accordance with the manufacturer's instructions.

**10.3.6.1 Low Point Drains.**

**10.3.6.1.1** To prevent freezing and corrosion, all low point drains in aboveground piping shall be opened, the pipe drained, and the valves closed and plugs replaced.

**10.3.6.1.2** Where weep holes are provided in lieu of low-point drains, they shall be inspected to ensure they are clear and unobstructed.

**10.4 Ultra-High-Speed Water Spray System (UHSWSS) Operational Tests.**

**10.4.1** A full operational test, including measurements of response time, shall be conducted at intervals not exceeding 1 year.

**10.4.1.1** Systems out of service shall be tested before being placed back in service.

**10.4.2** All detectors shall be tested and inspected monthly for physical damage and accumulation of deposits on the lenses of optical detectors.

**10.4.3** Controllers shall be inspected for faults at the start of each working shift.

**10.4.4 Valves.**

**10.4.4.1** Valves on the water supply line shall be inspected at the start of each working shift to verify they are open.

**10.4.4.2** Valves secured in the open position with a locking device or monitored by a signaling device that sounds a trouble signal at the deluge system control panel or other central location shall not require inspection.

**10.4.5 Response Time.**

**10.4.5.1** The response time shall be verified during the operational test.

**10.4.5.2** The response time shall be in accordance with the requirements of the system but not more than 100 milliseconds.

Copyright 2015 National Fire Protection Association (NFPA). Licensed, by agreement, for individual use and download on October 23, 2015 to VETERANS AFFAIRS. No other reproduction or transmission in any form permitted without written permission of NFPA. For inquires or to report unauthorized use, contact licensing@nfpa.org.



**10.5 Component Action Requirements.**

**10.5.1** Whenever a component in a water spray fixed system is adjusted, repaired, reconditioned, or replaced, the action required in Table 10.5.1 shall be performed.

**10.5.2** Where the original installation standard is different from the cited standard, the use of the appropriate installing standard shall be permitted.

**10.5.3** The actions of 10.5.1 shall not require a design review, which is outside the scope of this standard.

## Chapter 11 Foam-Water Sprinkler Systems

**11.1 General.**

**11.1.1 Minimum Requirements.**

**11.1.1.1** This chapter shall provide the minimum requirements for the routine inspection, testing, and maintenance of foam-water systems.

**11.1.1.2** Table 11.1.1.2 shall be used to determine the minimum required frequencies for inspection, testing, and maintenance.

**Table 10.5.1 Summary of Component Replacement Action Requirements**

| Component | Adjust | Repair/ Recondition | Replace | Required Action |
|---|---|---|---|---|
| **Water Delivery Components** | | | | |
| Pipe and fittings | X | X | X | Operational flow test |
| Nozzles | X | X | X | Operational flow test |
| Manual release | X | X | X | (1) Operational test<br>(2) Check for leaks at system working pressure<br>(3) Test all alarms |
| Fire department connections | | | | See Chapter 13 |
| **Alarm and Supervisory Components** | | | | |
| Pressure switch–type waterflow | X | X | X | Operational test using inspector's test connection |
| Water motor gong | X | X | X | Operational test using inspector's test connection |
| Valve supervisory device | X | X | X | Test for conformance with NFPA 15, *Standard for Water Spray Fixed Systems for Fire Protection*, and/or *NFPA 72, National Fire Alarm and Signaling Code* |
| Detection system | X | X | X | Operational test for conformance with NFPA 15 and/or *NFPA 72* |
| **Status-Indicating Components** | | | | |
| Gauges | | | X | Verify at 0 psi (0 bar) and system working pressure |
| **Testing and Maintenance Components** | | | | |
| Main drain | X | X | X | Full flow main drain test |
| Auxiliary drains | X | X | X | (1) Inspect for leaks at system working pressure<br>(2) Main drain test |
| **Structural Components** | | | | |
| Hanger/seismic bracing | X | X | X | Inspect for conformance with NFPA 15 and/or NFPA 13, *Standard for the Installation of Sprinkler Systems* |
| Pipe stands | X | X | X | Inspect for conformance with NFPA 15 and/or NFPA 13 |
| **Informational Components** | | | | |
| Identification signs | X | X | X | Inspect for conformance with NFPA 15 |

Copyright 2015 National Fire Protection Association (NFPA). Licensed, by agreement, for individual use and download on October 23, 2015 to VETERANS AFFAIRS. No other reproduction or transmission in any form permitted without written permission of NFPA. For inquires or to report unauthorized use, contact licensing@nfpa.org.



**Table 11.1.1.2 Summary of Foam-Water Sprinkler System Inspection, Testing, and Maintenance**

| System/Component | Frequency | Reference |
|---|---|---|
| **Inspection** | | |
| Discharge device location (sprinkler) | Annually | 11.2.5 |
| Discharge device location (spray nozzle) | Monthly | 11.2.5 |
| Discharge device position (sprinkler) | Annually | 11.2.5 |
| Discharge device position (spray nozzle) | Monthly | 11.2.5 |
| Foam concentrate strainer(s) | Quarterly | 11.2.7.2 |
| Drainage in system area | Quarterly | 11.2.8 |
| Proportioning system(s) — all | Monthly | 11.2.9 |
| Pipe corrosion | Annually | 11.2.3 |
| Pipe damage | Annually | 11.2.3 |
| Fittings corrosion | Annually | 11.2.3 |
| Fittings damage | Annually | 11.2.3 |
| Hangers/supports | Annually | 11.2.4 |
| Waterflow devices | Quarterly | 11.2.1 |
| Water supply tank(s) | | Chapter 9 |
| Fire pump(s) | | Chapter 8 |
| Water supply piping | | 11.2.6.1 |
| Control valve(s) | Weekly/monthly | — |
| Deluge/preaction valve(s) | | 11.2.1, Chapter 13 |
| Detection system | See *NFPA 72, National Fire Alarm and Signaling Code* | 11.2.2 |
| **Test** | | |
| Discharge device location | Annually | 11.3.2.6 |
| Discharge device position | Annually | 11.3.2.6 |
| Discharge device obstruction | Annually | 11.3.2.6 |
| Foam concentrate strainer(s) | Annually | 11.2.7.2 |
| Proportioning system(s) — all | Annually | 11.2.9 |
| Complete foam-water system(s) | Annually | 11.3.3 |
| Foam-water solution | Annually | 11.3.5 |
| Manual actuation device(s) | Annually | 11.3.4 |
| Backflow preventer(s) | Annually | Chapter 13 |
| Fire pump(s) | See Chapter 8 | — |
| Waterflow devices | Quarterly/semiannually | 11.3.1.3 |
| Water supply piping | Annually | Chapter 10 |
| Control valve(s) | See Chapter 13 | — |
| Strainer(s) — mainline | See Chapter 10 | 11.2.7.1 |
| Deluge/preaction valve(s) | See Chapter 13 | 11.2.1 |
| Detection system | See *NFPA 72* | 11.2.2 |
| Backflow preventer(s) | See Chapter 13 | — |
| Water supply tank(s) | See Chapter 9 | — |
| Water supply flow test | 5 years | 7.3.1 |
| Valve status test | | 13.3.1.2.1 |
| **Maintenance** | | |
| Foam concentrate pump operation | Monthly | 11.4.6.1, 11.4.7.1 |
| Foam concentrate strainer(s) | Quarterly | Section 11.4 |
| Foam concentrate samples | Annually | 11.2.10 |
| Proportioning system(s) standard pressure type | | |
| Ball drip (automatic type) drain valves | 5 years | 11.4.3.1 |
| Foam concentrate tank — drain and flush | 10 years | 11.4.3.2 |
| Corrosion and hydrostatic test | 10 years | 11.4.3.3 |
| Bladder tank type | | |
| Sight glass | 10 years | 11.4.4.1 |
| Foam concentrate tank — hydrostatic test | 10 years | 11.4.4.2 |
| Line type | | |
| Foam concentrate tank — corrosion and pickup pipes | 10 years | 11.4.5.1 |
| Foam concentrate tank — drain and flush | 10 years | 11.4.5.2 |

Copyright 2015 National Fire Protection Association (NFPA). Licensed, by agreement, for individual use and download on October 23, 2015 to VETERANS AFFAIRS. No other reproduction or transmission in any form permitted without written permission of NFPA. For inquires or to report unauthorized use, contact licensing@nfpa.org.



**Table 11.1.1.2** ***Continued***

| System/Component | Frequency | Reference |
|---|---|---|
| Standard balanced pressure type | | |
| Foam concentrate pump(s) | 5 years *(see Note)* | 11.4.6.2 |
| Balancing valve diaphragm | 5 years | 11.4.6.3 |
| Foam concentrate tank | 10 years | 11.4.6.4 |
| In-line balanced pressure type | | |
| Foam concentrate pump(s) | 5 years *(see Note)* | 11.4.7.2 |
| Balancing valve diaphragm | 5 years | 11.4.7.3 |
| Foam concentrate tank | 10 years | 11.4.7.4 |
| Pressure vacuum vents | 5 years | 11.4.8 |
| Water supply tank(s) | See Chapter 9 | — |
| Fire pump(s) | See Chapter 8 | — |
| Water supply | Annually | 11.2.6.1 |
| Backflow preventer(s) | See Chapter 13 | — |
| Detector check valve(s) | See Chapter 13 | — |
| Check valve(s) | See Chapter 13 | — |
| Control valve(s) | See Chapter 13 | — |
| Deluge/preaction valves | See Chapter 13 | 11.2.1 |
| Strainer(s) — mainline | See Chapter 10 | — |
| Detection system | See *NFPA 72* | 11.2.2 |

Note: Also refer to manufacturer's instructions and frequency. Maintenance intervals other than preventive maintenance are not provided, as they depend on the results of the visual inspections and operational tests. For foam-water systems in aircraft hangars, refer to the inspection, test, and maintenance requirements of NFPA 409, *Standard on Aircraft Hangars*, Table 11.1.1.

**11.1.2 Other System Components.** Fire pumps, water storage tanks, and valves common to other types of water-based fire protection systems shall be inspected, tested, and maintained in accordance with Chapters 8, 9, and 13, respectively, and as specified in Table 11.1.1.2.

**11.1.3 Foam-Water Systems.**

**11.1.3.1** This section shall apply to foam-water systems as specified in NFPA 16, *Standard for the Installation of Foam-Water Sprinkler and Foam-Water Spray Systems.*

**11.1.3.2** This section shall not include systems detailed in NFPA 11, *Standard for Low-, Medium-, and High-Expansion Foam.*

**11.1.4 Foam-Water System.**

**11.1.4.1** If during routine inspection and testing the foam-water system is determined to have been altered or replaced (e.g., equipment replaced, relocated, or foam concentrate replaced), it shall be determined whether the design intent has been altered and whether the system operates properly.

**11.1.4.1.1** Mechanical waterflow devices, including but not limited to water motor gongs, shall be tested quarterly.

**11.1.4.1.2** Valve-type and pressure switch–type waterflow devices shall be tested semiannually.

**11.1.4.1.3** Waterflow devices shall be inspected quarterly to verify that they are free of physical damage.

**11.1.4.2** The inspection shall verify that all components, including foam concentrate discharge devices and proportioning equipment, are installed in accordance with their listing.

**11.1.5 Obstruction Investigations.** The procedures outlined in Chapter 14 shall be followed where there is a need to conduct an obstruction investigation.

**11.1.6 Impairments.** The procedures outlined in Chapter 15 shall be followed where an impairment to protection occurs.

**11.2 Inspection.** Systems shall be inspected in accordance with the frequency specified in Table 11.1.1.2.

**11.2.1 Deluge Valves.** Deluge valves shall be inspected in accordance with the provisions of Chapter 13.

**11.2.2 Automatic Detection Equipment.** Automatic detection equipment shall be inspected, tested, and maintained in accordance with *NFPA 72*, *National Fire Alarm and Signaling Code*, to ensure that the detectors are in place, securely fastened, and protected from corrosion, weather, and mechanical damage and that the communication wiring, control panels, or pneumatic tubing system is functional.

**11.2.3 System Piping and Fittings.** System piping and fittings shall be inspected for the following:

(1) Mechanical damage (e.g., broken piping or cracked fittings)
(2) External conditions (e.g., missing or damaged paint or coatings, rust, and corrosion)
(3) Misalignment or trapped sections
(4) Low-point drains (automatic or manual)
(5) Location and condition of rubber-gasketed fittings

**11.2.4 Hangers and Supports.** Hangers and supports shall be inspected for the following and repaired or replaced as necessary:

(1) Condition (e.g., missing or damaged paint or coating, rust, and corrosion)
(2) Secure attachment to structural supports and piping
(3) Damaged or missing hangers

**11.2.5* Foam-Water Discharge Devices.**

**11.2.5.1** Foam-water discharge devices shall be inspected visually and maintained to ensure that they are in place, continue

Copyright 2015 National Fire Protection Association (NFPA). Licensed, by agreement, for individual use and download on October 23, 2015 to VETERANS AFFAIRS. No other reproduction or transmission in any form permitted without written permission of NFPA. For inquires or to report unauthorized use, contact licensing@nfpa.org.



to be aimed or pointed in the direction intended in the system design, and are free from external loading and corrosion.

**11.2.5.2** Where caps or plugs are required, the inspection shall confirm they are in place and free to operate as intended.

**11.2.5.3** Misaligned discharge devices shall be adjusted (aimed) by visual means, and the discharge patterns shall be inspected at the next scheduled flow test.

**11.2.5.4*** Inspection shall verify that unlisted combinations of discharge devices and foam concentrate have not been substituted.

**11.2.6 Water Supply.**

**11.2.6.1** The dependability of the water supply shall be ensured by regular inspection and maintenance, whether furnished by a municipal source, on-site storage tanks, a fire pump, or private underground piping systems.

**11.2.6.2*** Water supply piping shall be maintained free of internal obstructions.

**11.2.7 Strainers.**

**11.2.7.1** Mainline and individual discharge device strainers (basket or screen) shall be inspected in accordance with the provisions of Chapter 10.

**11.2.7.2** Foam concentrate strainers shall be inspected visually to ensure the blow-down valve is closed and plugged.

**11.2.7.3** Baskets or screens shall be removed and inspected after each operation or flow test.

**11.2.8 Drainage.** The area beneath and surrounding a foam-water spray system shall be inspected to ensure that drainage facilities, such as trap sumps and drainage trenches, are not blocked and retention embankments or dikes are in good repair.

**11.2.9* Proportioning Systems.**

**11.2.9.1** The components of the various proportioning systems described in 11.2.9 shall be inspected in accordance with the frequency specified in Table 11.1.1.2.

**11.2.9.2** Valves specified to be inspected shall be permitted to be open or closed, depending on specific functions within each foam-water system.

**11.2.9.3** The position (open or closed) of valves shall be verified in accordance with specified operating conditions.

**11.2.9.4*** Inspection of the concentrate tank shall include verification that the quantity of foam concentrate satisfies the requirements of the original design.

**11.2.9.5** Additional inspection requirements shall be performed as detailed for the proportioning systems specified in 11.2.9.

**11.2.9.5.1 Standard Pressure Proportioner.**

**11.2.9.5.1.1*** The pressure shall be removed before the inspection to prevent injury.

**11.2.9.5.1.2** The inspection shall verify the following:

(1) Ball drip valves (automatic drains) are free and opened.
(2) External corrosion on foam concentrate storage tanks is not present.

**11.2.9.5.2 Bladder Tank Proportioner.**

**11.2.9.5.2.1*** The pressure shall be removed before the inspection to prevent injury.

**11.2.9.5.2.2** The inspection shall include the following:

(1) Water control valves to foam concentrate tank
(2) An inspection for external corrosion on foam concentrate storage tanks
(3) An inspection for the presence of foam in the water surrounding the bladder (annual)

**11.2.9.5.3 Line Proportioner.** The inspection shall include the following:

(1)*Strainers
(2)*Verification that pressure vacuum vent is operating freely
(3) An inspection for external corrosion on foam concentrate storage tanks

**11.2.9.5.4 Standard Balanced Pressure Proportioner.** The inspection shall include the following:

(1)*Strainers
(2)*Verification that pressure vacuum vent is operating freely
(3) Verification that gauges are in good operating condition
(4) Verification that sensing line valves are open
(5) Verification that power is available to foam liquid pump

**11.2.9.5.5 In-Line Balanced Pressure Proportioner.** The inspection shall include the following:

(1)*Strainers
(2)*Verification that pressure vacuum vent is operating freely
(3) Verification that gauges are in good working condition
(4) Verification that sensing line valves at pump unit and individual proportioner stations are open
(5) Verification that power is available to foam liquid pump

**11.2.9.5.6 Orifice Plate Proportioner.** The inspection shall include the following:

(1)*Strainers
(2)*Verification that pressure vacuum vent is operating freely
(3) Verification that gauges are in good working condition
(4) Verification that power is available to foam liquid pump

**11.2.10 Foam Concentrate Samples.** Samples shall be submitted in accordance with the manufacturer's recommended sampling procedures.

**11.3* Operational Tests.** Frequency of system tests shall be in accordance with Table 11.1.1.2.

**11.3.1* Test Preparation.** Precautions shall be taken to prevent damage to property during the test.

**11.3.1.1** Mechanical waterflow devices, including but not limited to water motor gongs, shall be tested quarterly.

**11.3.1.2** Vane-type and pressure switch–type waterflow devices shall be tested semiannually.

**11.3.1.3 Waterflow Devices.** Waterflow devices shall be inspected quarterly to verify that they are free of physical damage.

**11.3.2* Operational Test Performance.**

**11.3.2.1** Operational tests shall be conducted to ensure that the foam-water system(s) responds as designed, both automatically and manually.

Copyright 2015 National Fire Protection Association (NFPA). Licensed, by agreement, for individual use and download on October 23, 2015 to VETERANS AFFAIRS. No other reproduction or transmission in any form permitted without written permission of NFPA. For inquires or to report unauthorized use, contact licensing@nfpa.org.



**11.3.2.2** The test procedures shall simulate anticipated emergency events so the response of the foam-water system(s) can be evaluated.

**11.3.2.3** Where discharge from the system discharge devices would create a hazardous condition or conflict with local requirements, an approved alternate method to achieve full flow conditions shall be permitted.

**11.3.2.4 Response Time.** Under test conditions, the automatic fire detection systems, when exposed to a test source, shall operate within the requirements of *NFPA 72, National Fire Alarm and Signaling Code*, for the type of detector provided, and the response time shall be recorded.

**11.3.2.5 Discharge Time.** The time lapse between operation of detection systems and water delivery time to the protected area shall be recorded for open discharge devices.

**11.3.2.6 Discharge Patterns.**

**11.3.2.6.1** The discharge patterns from all of the open spray devices shall be observed to ensure that patterns are not impeded by plugged discharge devices and to ensure that discharge devices are correctly positioned and that obstructions do not prevent discharge patterns from covering surfaces to be protected.

**11.3.2.6.2** Where obstructions occur, the piping and discharge devices shall be cleaned and the system retested.

**11.3.2.6.3** Discharge devices shall be permitted to be of different orifice sizes and types.

**11.3.2.7* Pressure Readings.**

**11.3.2.7.1** Pressure readings shall be recorded at the highest, most remote discharge device.

**11.3.2.7.2** A second pressure reading shall be recorded at the main control valve.

**11.3.2.7.3** Readings shall be compared to the hydraulic design pressures to ensure the original system design requirements are met.

**11.3.3 Multiple Systems.** The maximum number of systems expected to operate in case of fire shall be tested simultaneously to inspect the adequacy of the water supply and concentrate pump.

**11.3.4 Manual Actuation Devices.** Manual actuation devices shall be tested annually.

**11.3.5 Concentration Testing.**

**11.3.5.1** During the full flow foam test, a foam sample shall be taken.

**11.3.5.2** The foam sample shall be inspected by refractometric or other methods to verify concentration of the solution.

**11.3.5.3** Concentration shall be within 10 percent of the acceptance test results but in no case more than 10 percent below minimum design standards.

**11.3.6 Return to Service.** After the full flow test, the foam-water system shall be returned to service and the foam concentrate tank shall be replenished to design level.

**11.4* Maintenance.**

**11.4.1** Maintenance of foam-water systems shall be in accordance with the requirements of those chapters covering the specific component parts.

**11.4.2 Foam Components.** Maintenance of specific foam components shall be in accordance with 11.4.3 through 11.4.7.

**11.4.3 Standard Pressure Proportioner.**

**11.4.3.1** The ball drip (automatic-type) drain valves shall be disassembled, cleaned, and reassembled.

**11.4.3.2*** The foam liquid storage tank shall be drained of foam liquid and flushed.

**11.4.3.3** Foam liquid shall be permitted to be salvaged and reused.

**11.4.3.4** The foam liquid tank shall be inspected for internal and external corrosion and hydrostatically tested to the specified working pressure.

**11.4.4 Bladder Tank Proportioner.**

**11.4.4.1** Sight glass, where provided, shall be removed and cleaned.

**11.4.4.2*** The foam concentrate tank shall be hydrostatically tested to the specified working pressure.

**11.4.5 Line Proportioner.**

**11.4.5.1** The foam concentrate tank shall be inspected for internal corrosion.

**11.4.5.2** Pickup pipes inside the tank shall be inspected for corrosion, separation, or plugging.

**11.4.5.3** The foam concentrate tank shall be drained and flushed.

**11.4.5.4** Foam concentrate shall be permitted to be salvaged and reused.

**11.4.6 Standard Balanced Pressure Proportioner.**

**11.4.6.1 Pump Operation.**

**11.4.6.1.1** The foam concentrate pump shall be operated.

**11.4.6.1.2** Foam concentrate shall be circulated back to the tank.

**11.4.6.2 Servicing.** Foam pumps, drive train, and drivers shall be serviced in accordance with the manufacturer's instructions and frequency but not at intervals of more than 5 years.

**11.4.6.3 Flushing.** The diaphragm balancing valve shall be flushed through the diaphragm section with water or foam concentrate until fluid appears clear or new.

**11.4.6.4 Corrosion and Sediment.**

**11.4.6.4.1** The foam concentrate tank shall be inspected internally for corrosion and sediment.

**11.4.6.4.2** Excessive sediment shall require draining and flushing of the tank.

**11.4.7 In-Line Balanced Pressure Proportioner.**

**11.4.7.1 Pump Operation.**

**11.4.7.1.1** The foam concentrate pump shall be operated.

**11.4.7.1.2** Foam concentrate shall be circulated back to the tank.

**11.4.7.2 Servicing.** Foam pumps, drive train, and drivers shall be serviced in accordance with the manufacturer's instructions and frequency but not at intervals of more than 5 years.

Copyright 2015 National Fire Protection Association (NFPA). Licensed, by agreement, for individual use and download on October 23, 2015 to VETERANS AFFAIRS. No other reproduction or transmission in any form permitted without written permission of NFPA. For inquires or to report unauthorized use, contact licensing@nfpa.org.



**11.4.7.3 Flushing.** The diaphragm balancing valve shall be flushed through the diaphragm section with water or foam concentrate until fluid appears clear or new.

**11.4.7.4 Corrosion and Sediment.**

**11.4.7.4.1** The foam concentrate tank shall be inspected internally for corrosion and sediment.

**11.4.7.4.2** Excessive sediment shall require draining and flushing of the tank.

**11.4.8 Pressure Vacuum Vents.** The procedures specified in 11.4.8.1 through 11.4.8.13 shall be performed on pressure vacuum vents every 5 years.

**11.4.8.1** The vent shall be removed from the expansion dome.

**11.4.8.2** The vent shall be inspected to ensure that the opening is not blocked and that dirt or other foreign objects do not enter the tank.

**11.4.8.3** The vent bonnet shall be removed.

**11.4.8.4** The vacuum valve and pressure valve shall be lifted out.

**11.4.8.5** The vent body shall be flushed internally, and the vacuum valve and the pressure valve shall be washed thoroughly.

**11.4.8.6** The vent shall be inspected to ensure that the screen is not clogged, and the use of any hard, pointed objects to clear the screen shall be avoided.

**11.4.8.7** If the liquid has become excessively gummy or solidified, the vent body and parts shall be soaked in hot soapy water.

**11.4.8.8** The vent body shall be turned upside down and drained thoroughly.

**11.4.8.9** Parts shall be dried by placing them in a warm and dry area or by using an air hose.

**11.4.8.10** Parts shall be sprayed with a light Teflon® coating, and the vent shall be reassembled.

**11.4.8.11** The use of any type of oil for lubrication purposes shall not be permitted.

**11.4.8.12** The vent bonnet shall be replaced, and the vent shall be turned upside down slowly a few times to ensure proper freedom of the movable parts.

**11.4.8.13** The vent shall be attached to the liquid storage tank expansion dome.

**11.5 Component Action Requirements.**

**11.5.1** Whenever a component in a foam-water sprinkler system is adjusted, repaired, reconditioned, or replaced, the action required in Table 11.5.1 shall be performed.

**11.5.2** Where the original installation standard is different from the cited standard, the use of the appropriate installing standard shall be permitted.

**11.5.3** The actions of 11.5.1 and 11.5.2 shall not require a design review, which is outside the scope of this standard.

Copyright 2015 National Fire Protection Association (NFPA). Licensed, by agreement, for individual use and download on October 23, 2015 to VETERANS AFFAIRS. No other reproduction or transmission in any form permitted without written permission of NFPA. For inquires or to report unauthorized use, contact licensing@nfpa.org.



**Table 11.5.1 Summary of Component Replacement Action Requirements**

| Component | Adjust | Repair/ Recondition | Replace | Required Action |
|---|---|---|---|---|
| **Water Delivery Components** | | | | |
| Pipe and fittings on open head system | X | X | X | Operational flow test |
| Pipe and fittings on closed head system | X | X | X | Hydrostatic test in conformance with NFPA 16, *Standard for the Installation of Foam-Water Sprinkler and Foam-Water Spray Systems* |
| Discharge devices | X | | X | (1) Inspect for leaks at system working pressure<br>(2) Inspect for impairments at orifice |
| Fire department connections | X | X | X | See Chapter 13 |
| Manual release | X | X | X | (1) Operational test<br>(2) Inspect for leaks at system working pressure<br>(3) Test all alarms |
| **Foam Components** | | | | |
| Foam concentrate strainer(s) | | | | See Chapter 13 |
| Proportioning system(s) | X | X | X | Conduct flow test and inspect proportioning by refractometer test or equivalent |
| Water supply tank(s) | | | | See Chapter 9 |
| Foam concentrate | X | | X | Submit 1 pint (473 mL) sample for laboratory analysis for conformance with manufacturer's specifications |
| Foam concentrate pump | | | | See Chapter 8 |
| Ball drip (automatic-type) drain valves | | | | See Chapter 13 |
| Foam concentrate tank | X | X | X | Inspect for condition; repair as appropriate |
| Bladder tank | X | X | X | Inspect water jacket for presence of foam concentrate |
| **Alarm and Supervisory Components** | | | | |
| Vane-type waterflow | X | X | X | Operational test using inspector's test connection |
| Pressure switch–type waterflow | X | X | X | Operational test using inspector's test connection |
| Water motor gong | | | X | Operational test using inspector's test connection |
| Valve supervisory device | | | X | Test for conformance with NFPA 16 and/or *NFPA 72, National Fire Alarm and Signaling Code* |
| Detection system | X | X | X | Operational test for conformance with NFPA 16 and/or *NFPA 72* |
| **Status-Indicating Components** | | | | |
| Gauges | | | X | Verify at 0 psi (0 bar) and system working pressure |
| **Testing and Maintenance Components** | | | | |
| Main drain | X | X | X | Full flow main drain test |
| Auxiliary drains | X | X | X | Inspect for leaks at system working pressure |
| Inspector's test connection | X | X | X | Inspect for leaks at system working pressure |
| **Structural Components** | | | | |
| Hanger/seismic bracing | X | X | X | Inspect for conformance with NFPA 16 and/or NFPA 13, *Standard for the Installation of Sprinkler Systems* |
| Pipe stands | X | X | X | Inspect for conformance with NFPA 16 and/or NFPA 13 |
| **Informational Components** | | | | |
| Valve signs | X | X | X | Inspect for conformance with NFPA 16 and/or NFPA 13 |
| Hydraulic placards | X | X | X | Inspect for conformance with NFPA 16 and/or NFPA 13 |

Copyright 2015 National Fire Protection Association (NFPA). Licensed, by agreement, for individual use and download on October 23, 2015 to VETERANS AFFAIRS. No other reproduction or transmission in any form permitted without written permission of NFPA. For inquires or to report unauthorized use, contact licensing@nfpa.org.



## Chapter 12 Water Mist Systems

**12.1 Inspection and Testing.**

**12.1.1 Components and Systems.**

**12.1.1.1** All components and systems shall be inspected and tested to verify that they function as intended.

**12.1.1.2** Water mist systems that are equipped with an additive system shall be tested with the specific additive system engaged or used during the acceptance testing.

**12.1.2 Requirements.** The components of typical water mist systems to be inspected and tested are provided in Table 12.1.2.

**12.1.2.1** Water mist nozzles shall be inspected from the floor level annually.

**12.1.2.1.1** Any water mist nozzle that shows signs of any of the following shall be replaced:

(1) Leakage
(2) Corrosion
(3) Physical damage
(4) Loss of fluid in the glass bulb heat responsive element
(5)*Loading
(6) Painting, unless painted by the water mist nozzle manufacturer

**12.1.2.1.2** Any water mist nozzle that has been installed in the incorrect orientation shall be corrected by repositioning the branch line, drop, or sprig, or shall be replaced.

**12.1.2.1.3** Water mist nozzles with glass bulbs shall be replaced if the bulbs are empty of fluid.

**12.1.2.1.4** Water mist nozzles installed in concealed spaces such as above suspended ceilings shall not require inspection.

**12.1.2.1.5** Water mist nozzles installed in areas that are inaccessible for safety considerations due to process operations shall be inspected during each scheduled shutdown.

**12.1.2.1.6** Stock, furnishings, or equipment closer to the water mist nozzle than permitted by the clearance specified in the manufacturer's installation instructions shall be corrected.

**12.1.2.2** The supply of spare automatic water mist nozzles shall be inspected annually for the correct number and type of water mist nozzles as required by NFPA 750.

**12.1.2.3*** Where required by this section, sample automatic water mist nozzles shall be submitted to a recognized testing laboratory acceptable to the authority having jurisdiction for functional testing.

**12.1.2.3.1** Automatic water mist nozzles that have been in service for 20 years shall be replaced, or representative samples shall be tested and then retested at 10-year intervals.

**12.1.2.3.2*** Where water mist nozzles are subjected to harsh environments, including corrosive atmospheres and corrosive water supplies, they shall be either replaced or representative samples tested on a 5-year basis.

**12.1.2.4*** A representative sample of water mist nozzles for testing per 12.1.2.3 shall consist of a minimum of four water mist nozzles or 1 percent of the number of water mist nozzles per individual water mist nozzle sample, whichever is greater.

**12.1.2.4.1** Where one water mist nozzle within a representative sample fails to meet the test requirement, all water mist nozzles within the area represented by that sample shall be replaced.

**Table 12.1.2 Mist Systems**

| Item | Task | Weekly | Monthly | Quarterly | Semi-annually | Annually | Other |
|---|---|---|---|---|---|---|---|
| Water supply (general) | Inspect source pressure. | | | X | X* | X | |
| | Inspect source quality (*first year). | | | | | | |
| | Test source pressure, flow, quantity, duration. | | | | | X | |
| Water storage tanks | Inspect water level (unsupervised). | | X | | | | |
| | Inspect water level (supervised). | | | X | | | |
| | Confirm sight glass valves are open. | | X | | | | |
| | Inspect tank gauges, pressure. | | | X | | | |
| | Inspect all valves, appurtenances. | | | | X | | |
| | Drain tank, inspect interior, and refill. | | | | | X | |
| | Inspect tank condition (corrosion). | | | | | X | |
| | Inspect water quality. | | | | | X | |
| | Inspect water temperature. | | | | | | Extreme weather |
| Water storage cylinder (high pressure) | Inspect water level (load cells). | | | | X | | |
| | Inspect water level (unsupervised). | | | X | | | |
| | Inspect support frame/restraints. | | | | | X | |
| | Inspect vent plugs at refilling. | | | | | X | |
| | Inspect cylinder pressure on discharge. | | | | | X | |
| | Inspect filters on refill connection. | | | | | X | |

Copyright 2015 National Fire Protection Association (NFPA). Licensed, by agreement, for individual use and download on October 23, 2015 to VETERANS AFFAIRS. No other reproduction or transmission in any form permitted without written permission of NFPA. For inquires or to report unauthorized use, contact licensing@nfpa.org.



**Table 12.1.2** *Continued*

| Item | Task | Weekly | Monthly | Quarterly | Semi-annually | Annually | Other |
|---|---|---|---|---|---|---|---|
| Additive storage cylinders | Inspect general condition, corrosion. | | | X | | | |
| | Inspect quantity of additive agent. | | | | X | | |
| | Test quality of additive agent. | | | | | X | |
| | Test additive injection, full discharge test. | | | | | X | |
| Water recirculation tank | Inspect water level (unsupervised). | | X | | | | |
| | Inspect water level (supervised). | | | X | | | |
| | Inspect supports, attachments. | | | | | X | |
| | Test low water level alarm. | | | | | X | |
| | Inspect water quality, drain, flush, and refill. | | | | | X | |
| | Test operation of float-operated valve. | | | | | X | |
| | Test pressure at outlet during discharge. | | | | | X | |
| | Test backflow prevention device (if present). | | | | | X | |
| | Inspect and clean filters, strainers, cyclone separator. | | | | | X | |
| Compressed gas cylinders | Inspect support frame and cylinder restraints. | | | X | | | |
| | Inspect cylinder pressure (unsupervised). | | X | | | | |
| | Inspect cylinder pressure (supervised). | | | X | | | |
| | Confirm cylinder control valve is open. | | X | | | | |
| | Inspect cylinder capacity and pressure rating. | | | | | X | |
| | Inspect cylinder compliance specification. | | | | | X | |
| | Confirm compressed gas meets specifications (moisture, cylinder pressure). | | | | | X | |
| | Hydrostatic test cylinders. | | | | | | 5–12 years |
| Plant air, compressors, and receivers | Inspect air pressure (unsupervised). | X | | | | | |
| | Inspect air pressure (supervised). | | X | | | | |
| | Start compressor. | X | | | | | |
| | Check compressor/receiver capacity, changes. | | | | X | | |
| | Inspect compressed air moisture content. | | | | | X | |
| | Clean filters, moisture traps. | | | | X | | |
| | Test full capacity, duration, and any changes in other demands. | | | | | X | |

*(continues)*

Copyright 2015 National Fire Protection Association (NFPA). Licensed, by agreement, for individual use and download on October 23, 2015 to VETERANS AFFAIRS. No other reproduction or transmission in any form permitted without written permission of NFPA. For inquires or to report unauthorized use, contact licensing@nfpa.org.



**Table 12.1.2** ***Continued***

| Item | Task | Weekly | Monthly | Quarterly | Semi-annually | Annually | Other |
|---|---|---|---|---|---|---|---|
| Pumps and drivers | Inspection, testing, and maintenance in accordance with the requirements of NFPA 20, *Standard for the Installation of Stationary Pumps for Fire Protection*, and NFPA 25. | X | X | X | X | X | |
| Standby pump | Inspect and empty the moisture trap, oil injection (pneumatic). | | X | | | | |
| | Inspect compressed gas supply, inlet air pressure. | | X | | | | |
| | Inspect outlet water (standby) pressure. | | X | | | | |
| | Test start/stop pressure settings for standby pressure. | | | X | | | |
| Pneumatic valves | Inspect cylinder valves, master release valves. | | X | | | | |
| | Inspect all tubing associated with release valves. | | | X | | | |
| | Test solenoid release of master release valve. | | | | X | | |
| | Test manual release of master release valve. | | | | | X | |
| | Test operation of slave valves. | | | | | X | |
| | Reset all pneumatic cylinder release valves. | | | | | X | |
| | Test on-off cycling of valves intended to cycle. | | | | | X | |
| System control valves | Inspection, testing, and maintenance in accordance with the requirements of NFPA 25. | X | X | X | X | X | |
| Control equipment | Inspection, testing, and maintenance in accordance with the requirements of *NFPA 72, National Fire Alarm and Signaling Code.* | | | | | | |
| Water mist system piping and nozzles | Inspection, testing, and maintenance in accordance with NFPA 25. Inspect sample of nozzle screens and strainers *(see 10.5.1.4 of NFPA 750, Standard on Water Mist Fire Protection Systems).* | X | X | X | X | X | After discharge |
| Enclosure features, interlocks | Inspect enclosure integrity. | | | | X | | |
| Ventilation | Test interlocked systems (e.g., ventilation shutdown). | | | | | X | |
| | Test shutdown of fuel/lubrication systems. | | | | | X | |

Copyright 2015 National Fire Protection Association (NFPA). Licensed, by agreement, for individual use and download on October 23, 2015 to VETERANS AFFAIRS. No other reproduction or transmission in any form permitted without written permission of NFPA. For inquires or to report unauthorized use, contact licensing@nfpa.org.



**12.2 Maintenance.**

**12.2.1 General.**

**12.2.1.1** Maintenance shall be performed to keep the system equipment operable or to make repairs.

**12.2.1.1.1** Mechanical waterflow devices, including but not limited to water motor gongs, shall be tested quarterly.

**12.2.1.1.2** Vane-type and pressure switch–type waterflow devices shall be tested semiannually.

**12.2.1.1.3** Waterflow devices shall be inspected quarterly to verify that they are free of physical damage.

**12.2.1.1.4** Where required by the manufacturer, maintenance shall be performed on devices not described in this standard.

**12.2.1.2** As-built system installation drawings, original acceptance test records, and device manufacturer's maintenance bulletins shall be retained to assist in the proper care of the system and its components.

**12.2.1.3** Replacement components shall be in accordance with the manufacturer's specifications and the original system design.

**12.2.1.4** Spare components shall be accessible and shall be stored in a manner to prevent damage or contamination.

**12.2.1.5*** After each system operation, a representative sample of operated water mist nozzles in the activated zone shall be inspected.

**12.2.1.6** After each system operation due to fire, the system filters and strainers shall be cleaned or replaced.

**12.2.1.7** Where applicable to the type of water mist system, scheduled maintenance shall be performed as outlined in Table 12.2.1.7.

**Table 12.2.1.7 Maintenance Frequencies**

| Item | Activity | Frequency |
|---|---|---|
| Water tank | Drain and refill | Annually |
| System | Flushing | Annually |
| Strainers and filters | Clean or replace as required | After system operation |

**12.2.2 Water Mist Nozzles.**

**12.2.2.1*** Replacement water mist nozzles shall have the proper characteristics for the application intended, including the nozzle model and temperature rating.

**12.2.2.2** Only new water mist nozzles shall be used to replace existing water mist nozzles.

**12.2.2.3*** A supply of spare water mist nozzles (never fewer than three) shall be maintained on the premises so that any water mist nozzles that have operated or been damaged in any way can be promptly replaced.

**12.2.2.3.1** The water mist nozzles shall correspond to the manufacturer(s), models, and temperature ratings of the water mist nozzles in the property.

**12.2.2.3.2** The automatic water mist nozzles shall be kept in a cabinet located where the temperature will at no time exceed 100°F (38°C).

**12.2.2.3.3** The stock of spare thermally activated nozzles shall include all types and ratings installed and shall be as follows:

(1) For systems having fewer than 50 nozzles, not fewer than 3 nozzles
(2) For systems having 50 to 300 nozzles, not fewer than 6 nozzles
(3) For systems having 301 to 1000 nozzles, not fewer than 12 nozzles
(4) For systems having over 1000 nozzles, not fewer than 24 nozzles

**12.2.2.4*** Where required by the manufacturer, a special water mist nozzle wrench shall be provided and kept in the cabinet to be used for the removal and installation of nozzles.

**12.2.2.4.1** One water mist nozzle wrench shall be provided for each type of nozzle installed.

**12.2.2.5 Protective Coverings.**

**12.2.2.5.1** Water mist nozzles protecting spray areas and mixing rooms in resin application areas installed with protective coverings shall continue to be protected against overspray residue so that they will operate in the event of fire.

**12.2.2.5.2*** Water mist nozzles installed as described in 12.2.2.5.1 shall be protected using cellophane bags having a thickness of 0.003 in. (0.076 mm) or less or thin paper bags.

**12.2.2.5.3** Coverings shall be replaced periodically so that heavy deposits of residue do not accumulate.

**12.2.2.6** Water mist nozzles shall not be altered in any respect or have any type of ornamentation, paint, or coatings applied after shipment from the manufacturer.

**12.2.2.7** Automatic water mist nozzles used for protecting commercial-type cooking equipment and ventilating systems shall be replaced annually.

**12.2.2.7.1** Where automatic water mist nozzles are used and annual examination shows no buildup of grease or other material on the nozzles, the nozzles shall not be required to be replaced.

**12.3 Training.**

**12.3.1** All persons who might be expected to inspect, test, maintain, or operate water mist systems shall be trained thoroughly in the functions they are expected to perform.

**12.3.2** Refresher training shall be provided as recommended by the manufacturer or by the authority having jurisdiction.

## Chapter 13 Valves, Valve Components, and Trim

**13.1* General.**

**13.1.1 Minimum Requirements.**

**13.1.1.1** This chapter shall provide the minimum requirements for the routine inspection, testing, and maintenance of valves, valve components, and trim.

**13.1.1.2** Table 13.1.1.2 shall be used to determine the minimum required frequencies for inspection, testing, and maintenance.

Copyright 2015 National Fire Protection Association (NFPA). Licensed, by agreement, for individual use and download on October 23, 2015 to VETERANS AFFAIRS. No other reproduction or transmission in any form permitted without written permission of NFPA. For inquires or to report unauthorized use, contact licensing@nfpa.org.



**Table 13.1.1.2 Summary of Valves, Valve Components, and Trim Inspection, Testing, and Maintenance**

| Item | Frequency | Reference |
|---|---|---|
| **Inspection** | | |
| *Control Valves* | | |
| Sealed | Weekly | 13.3.2.1 |
| Locked or electrically supervised | Monthly | 13.3.2.1.1 |
| *Valve Supervisory Signal Initiating Device* | Quarterly | 13.3.2.1.2 |
| *Alarm Valves* | | |
| Exterior | Monthly | 13.4.1.1 |
| Interior | 5 years | 13.4.1.2 |
| Strainers, filters, orifices | 5 years | 13.4.1.2 |
| *Check Valves* | | |
| Interior | 5 years | 13.4.2.1 |
| *Preaction/Deluge Valves* | | |
| Enclosure (during cold weather) | Daily/weekly | 13.4.3.1 |
| Exterior | Monthly | 13.4.3.1.6 |
| Interior | Annually/5 years | 13.4.3.1.7 |
| Strainers, filters, orifices | 5 years | 13.4.3.1.8 |
| *Dry Pipe Valves/ Quick-Opening Devices* | | |
| Gauges | Weekly/monthly | 13.4.4.1.2.4, 13.4.4.1.2.5 |
| Enclosure (during cold weather) | Daily/weekly | 13.4.4.1.1 |
| Exterior | Monthly | 13.4.4.1.4 |
| Interior | Annually | 13.4.4.1.5 |
| Strainers, filters, orifices | 5 years | 13.4.4.1.6 |
| *Pressure-Reducing and Relief Valves* | | |
| Sprinkler systems | Quarterly | 13.5.1.1 |
| Hose connections | Annually | 13.5.2.1 |
| Hose racks | Annually | 13.5.3.1 |
| Fire pumps | | |
| Casing relief valves | Weekly | 13.5.7.1, 13.5.7.1.1 |
| Pressure-relief valves | Weekly | 13.5.7.2, 13.5.7.2.1 |
| *Backflow Prevention Assemblies* | | |
| Reduced pressure | Weekly/monthly | 13.6.1 |
| Reduced-pressure detectors | Weekly/monthly | 13.6.1 |
| *Fire Department Connections* | Quarterly | 13.7.1 |
| **Testing** | | |
| *Main Drains* | Annually/quarterly | 13.2.5, 13.2.5.1, 13.3.3.4 |
| *Gauges* | 5 years | 13.2.7.2 |
| *Waterflow Alarms* | Quarterly/semiannually | 13.2.6 |
| *Control Valves* | | |
| Position | Annually | 13.3.3.1 |
| Operation | Annually | 13.3.3.1 |
| Supervisory | Semiannually | 13.3.3.5 |
| *Preaction/Deluge Valves* | | |
| Priming water | Quarterly | 13.4.3.2.1 |
| Low air pressure alarms | Quarterly/annually | 13.4.3.2.13, 13.4.3.2.14 |
| Full flow | Annually | 13.4.3.2.2 |
| Air leakage | 3 years | 13.4.3.2.6 |

Copyright 2015 National Fire Protection Association (NFPA). Licensed, by agreement, for individual use and download on October 23, 2015 to VETERANS AFFAIRS. No other reproduction or transmission in any form permitted without written permission of NFPA. For inquires or to report unauthorized use, contact licensing@nfpa.org.



**Table 13.1.1.2** ***Continued***

| Item | Frequency | Reference |
|---|---|---|
| *Dry Pipe Valves/ Quick-Opening Devices* | | |
| Air leakage | 3 years | 13.4.4.2.9 |
| Priming water | Quarterly | 13.4.4.2.1 |
| Low air pressure alarm | Quarterly | 13.4.4.2.6 |
| Quick-opening devices | Quarterly | 13.4.4.2.4 |
| Trip test | Annually | 13.4.4.2.2 |
| Full flow trip test | 3 years | 13.4.4.2.2.2 |
| *Pressure-Reducing and Relief Valves* | | |
| Sprinkler systems | 5 years | 13.5.1.2 |
| Circulation relief | Annually | 13.5.7.1.2 |
| Pressure relief valves | Annually | 13.5.7.2.2 |
| Hose connections | 5 years | 13.5.2.2 |
| Hose racks | 5 years | 13.5.3.2 |
| *Backflow Prevention Assemblies* | Annually | 13.6.2 |
| **Maintenance** | | |
| *Control Valves* | Annually | 13.3.4 |
| *Preaction/Deluge Valves* | Annually | 13.4.3.3.2 |
| *Dry Pipe Valves/ Quick-Opening Devices* | Annually | 13.4.4.3 |

**13.2 General Provisions.**

**13.2.1** The property owner or designated representative shall have manufacturers' literature available to provide specific instructions for inspecting, testing, and maintaining the valves and associated equipment.

**13.2.2** All pertinent personnel, departments, authorities having jurisdiction, or agencies shall be notified that testing or maintenance of the valve and associated alarms is to be conducted.

**13.2.3*** All system valves shall be protected from physical damage and shall be accessible.

**13.2.4** Before opening a test or drain valve, it shall be verified that adequate provisions have been made for drainage.

**13.2.5* Main Drain Test.** A main drain test shall be conducted annually for each water supply lead-in to a building water-based fire protection system to determine whether there has been a change in the condition of the water supply.

**13.2.5.1** Where the lead-in to a building supplies a header or manifold serving multiple systems, a single main drain test shall be permitted.

**13.2.5.2** In systems where the sole water supply is through a backflow preventer and/or pressure-reducing valves, the main drain test of at least one system downstream of the device shall be conducted on a quarterly basis.

**13.2.5.3** When there is a 10 percent reduction in full flow pressure when compared to the original acceptance test or previously performed tests, the cause of the reduction shall be identified and corrected if necessary.

**13.2.6 Alarm Devices.**

**13.2.6.1** Mechanical waterflow alarm devices, including but not limited to water motor gongs, shall be tested quarterly.

**13.2.6.2** Vane-type and pressure switch–type waterflow devices shall be tested semiannually.

**13.2.7 Gauges.**

**13.2.7.1** Gauges shall be inspected monthly to verify that they are in good condition and that normal pressure is being maintained.

**13.2.7.1.1** Where other sections of this standard have different frequency requirements for specific gauges, those requirements shall be used.

**13.2.7.2** Gauges shall be replaced every 5 years or tested every 5 years by comparison with a calibrated gauge.

**13.2.7.3** Gauges not accurate to within 3 percent of the full scale shall be recalibrated or replaced.

**13.2.8 Records.** Records shall be maintained in accordance with Section 4.3.

**13.3 Control Valves in Water-Based Fire Protection Systems.**

**13.3.1*** Each control valve shall be identified and have a sign indicating the system or portion of the system it controls.

**13.3.1.1** Systems that have more than one control valve that must be closed to work on a system shall have a sign on each affected valve referring to the existence and location of other valves.

**13.3.1.2*** When a normally open valve is closed, the procedures established in Chapter 15 shall be followed.

**13.3.1.2.1** When the valve is returned to service, a valve status test (either main or sectional drain, as appropriate) shall be conducted to determine that the valve is not closed.

**13.3.1.3** Each normally open valve shall be secured by means of a seal or a lock or shall be electrically supervised in accordance with the applicable NFPA standards.

Copyright 2015 National Fire Protection Association (NFPA). Licensed, by agreement, for individual use and download on October 23, 2015 to VETERANS AFFAIRS. No other reproduction or transmission in any form permitted without written permission of NFPA. For inquires or to report unauthorized use, contact licensing@nfpa.org.



**13.3.1.4** Normally closed valves shall be secured by means of a seal or shall be electrically supervised in accordance with the applicable NFPA standard.

**13.3.1.5** Sealing or electrical supervision shall not be required for hose valves.

**13.3.2 Inspection.**

**13.3.2.1** All valves shall be inspected weekly.

**13.3.2.1.1** Valves secured with locks or supervised in accordance with applicable NFPA standards shall be permitted to be inspected monthly.

**13.3.2.1.2** Control valve supervisory alarm devices shall be inspected quarterly to verify that they are free of physical damage.

**13.3.2.1.3** After any alterations or repairs, an inspection shall be made by the property owner or designated representative to ensure that the system is in service and all valves are in the normal position and properly sealed, locked, or electrically supervised.

**13.3.2.2*** The valve inspection shall verify that the valves are in the following condition:

(1) In the normal open or closed position
(2)*Sealed, locked, or supervised
(3) Accessible
(4) Post indicator valves (PIVs) are provided with correct wrenches
(5) Free from external leaks
(6) Provided with applicable identification

**13.3.3 Testing.**

**13.3.3.1** Each control valve shall be operated annually through its full range and returned to its normal position.

**13.3.3.2*** Post indicator valves shall be opened until spring or torsion is felt in the rod, indicating that the rod has not become detached from the valve.

**13.3.3.2.1** This test shall be conducted every time the valve is closed.

**13.3.3.3** Post indicator and outside screw and yoke valves shall be backed a one-quarter turn from the fully open position to prevent jamming.

**13.3.3.4** A main drain test shall be conducted any time the control valve is closed and reopened at system riser.

**13.3.3.5* Supervisory Switches.**

**13.3.3.5.1** Valve supervisory switches shall be tested semiannually.

**13.3.3.5.2** A distinctive signal shall indicate movement from the valve's normal position during either the first two revolutions of a hand wheel or when the stem of the valve has moved one-fifth of the distance from its normal position.

**13.3.3.5.3** The signal shall not be restored at any valve position except the normal position.

**13.3.4 Maintenance.**

**13.3.4.1** The operating stems of outside screw and yoke valves shall be lubricated annually.

**13.3.4.2** The valve then shall be completely closed and reopened to test its operation and distribute the lubricant.

**13.4 System Valves.**

**13.4.1 Inspection of Alarm Valves.** Alarm valves shall be inspected as described in 13.4.1.1 and 13.4.1.2.

**13.4.1.1*** Alarm valves and system riser check valves shall be externally inspected monthly and shall verify the following:

(1) The gauges indicate normal supply water pressure is being maintained.
(2) The valve is free of physical damage.
(3) All valves are in the appropriate open or closed position.
(4) The retarding chamber or alarm drains are not leaking.

**13.4.1.2*** Alarm valves and their associated strainers, filters, and restriction orifices shall be inspected internally every 5 years unless tests indicate a greater frequency is necessary.

**13.4.1.3 Maintenance.**

**13.4.1.3.1** Internal components shall be cleaned/repaired as necessary in accordance with the manufacturer's instructions.

**13.4.1.3.2** The system shall be returned to service in accordance with the manufacturer's instructions.

**13.4.2 Check Valves.**

**13.4.2.1 Inspection.** Valves shall be inspected internally every 5 years to verify that all components operate correctly, move freely, and are in good condition.

**13.4.2.2 Maintenance.** Internal components shall be cleaned, repaired, or replaced as necessary in accordance with the manufacturer's instructions.

**13.4.3 Preaction Valves and Deluge Valves.**

**13.4.3.1 Inspection.**

**13.4.3.1.1** Valve enclosures for preaction and deluge valves subject to freezing shall be inspected daily during cold weather to verify a minimum temperature of 40°F (4.0°C).

**13.4.3.1.1.1** Valve enclosures equipped with low temperature alarms shall be inspected weekly.

**13.4.3.1.2** Low temperature alarms, if installed in valve enclosures, shall be inspected annually at the beginning of the heating season to verify that they are free of physical damage.

**13.4.3.1.3** Gauges shall be inspected weekly.

**13.4.3.1.3.1** The gauge on the supply side of the preaction or deluge valve shall indicate that the normal supply water pressure is being maintained.

**13.4.3.1.4** The gauge monitoring the preaction system supervisory air pressure, if provided, shall be inspected monthly to verify that it indicates that normal pressure is being maintained.

**13.4.3.1.5** The gauge monitoring the detection system pressure, if provided, shall be tested monthly to verify that it indicates that normal pressure is being maintained.

**13.4.3.1.6** The preaction or deluge valve shall be externally inspected monthly to verify the following:

(1) The valve is free from physical damage.
(2) All trim valves are in the appropriate open or closed position.
(3) The valve seat is not leaking.
(4) Electrical components are in service.

Copyright 2015 National Fire Protection Association (NFPA). Licensed, by agreement, for individual use and download on October 23, 2015 to VETERANS AFFAIRS. No other reproduction or transmission in any form permitted without written permission of NFPA. For inquires or to report unauthorized use, contact licensing@nfpa.org.



**13.4.3.1.7** The interior of the preaction or deluge valve and the condition of detection devices shall be inspected annually when the trip test is conducted.

**13.4.3.1.7.1** Internal inspection of valves that can be reset without removal of a faceplate shall be permitted to be conducted every 5 years.

**13.4.3.1.8** Strainers, filters, restricted orifices, and diaphragm chambers shall be inspected internally every 5 years unless tests indicate a greater frequency is necessary.

**13.4.3.2 Testing.**

**13.4.3.2.1*** The priming water level in supervised preaction systems shall be tested quarterly for compliance with the manufacturer's instructions.

**13.4.3.2.2*** Each deluge valve shall be trip tested annually at full flow in warm weather and in accordance with the manufacturer's instructions.

**13.4.3.2.2.1*** Full flow tests shall incorporate full functionality of the system as a unit, including automatic and manual activation.

**13.4.3.2.2.2** Protection shall be provided for any devices or equipment subject to damage by system discharge during tests.

**13.4.3.2.2.3** Where the nature of the protected property is such that water cannot be discharged for test purposes, the trip test shall be conducted in a manner that does not necessitate discharge in the protected area.

**13.4.3.2.2.4** Where the nature of the protected property is such that water cannot be discharged unless protected equipment is shut down (e.g., energized electrical equipment), a full flow system test shall be conducted at the next scheduled shutdown.

**13.4.3.2.2.5** The full flow test frequency shall not exceed 3 years.

**13.4.3.2.2.6** The water discharge patterns from all of the open spray nozzles or sprinklers shall be observed to ensure that patterns are not impeded by plugged nozzles, that nozzles are correctly positioned, and that obstructions do not prevent discharge patterns from wetting surfaces to be protected.

**(A)** Where the nature of the protected property is such that water cannot be discharged, the nozzles or open sprinklers shall be inspected for correct orientation and the system tested with air to ensure that the nozzles are not obstructed.

**(B)** Where obstructions occur, the piping and sprinklers or nozzles shall be cleaned and the system retested.

**13.4.3.2.3** Except for preaction systems covered by 13.4.3.2.5, every 3 years the preaction valve shall be trip tested with the control valve fully open.

**13.4.3.2.4** During those years when full flow testing in accordance with 13.4.3.2.3 is not required, the preaction valve shall be trip tested with the control valve partially open.

**13.4.3.2.5** Preaction or deluge valves protecting freezers shall be trip tested in a manner that does not introduce moisture into the piping in the freezer.

**13.4.3.2.6** Preaction systems shall be tested once every 3 years for air leakage, using one of the following test methods:

(1) A pressure test at 40 psi (3.2 bar) for 2 hours. The system shall be permitted to lose up to 3 psi (0.2 bar) during the duration of the test. Air leaks shall be addressed if the system loses more than 3 psi (0.2 bar) during this test.
(2) With the system at normal system pressure, shut off the air source (compressor or shop air) for 4 hours. If the low air pressure alarm goes off within this period, the air leaks shall be addressed.

**13.4.3.2.7 Deluge System Pressure Readings.**

**13.4.3.2.7.1** Pressure readings shall be recorded at the hydraulically most remote nozzle or sprinkler.

**13.4.3.2.7.2** A second pressure reading shall be recorded at the deluge valve.

**13.4.3.2.7.3** These readings shall be compared to the hydraulic design pressures to ensure the original system design requirements are met by the water supply.

**13.4.3.2.7.4** Where the hydraulically most remote nozzle or sprinkler is inaccessible, nozzles or sprinklers in other than foam-water systems shall be permitted to be inspected visually without taking a pressure reading on the most remote nozzle or sprinkler.

**13.4.3.2.7.5** Where the reading taken at the riser indicates that the water supply has deteriorated, a gauge shall be placed on the hydraulically most remote nozzle or sprinkler and the results compared with the required design pressure.

**13.4.3.2.8 Multiple Systems.** The maximum number of systems expected to operate in case of fire shall be tested simultaneously to inspect the adequacy of the water supply.

**13.4.3.2.9 Manual Operation.** Manual actuation devices shall be operated annually.

**13.4.3.2.10 Return to Service.** After the full flow test, the system shall be returned to service in accordance with the manufacturer's instructions.

**13.4.3.2.11** Grease or other sealing materials shall not be applied to the seating surfaces of preaction or deluge valves.

**13.4.3.2.12*** Records indicating the date the preaction or deluge valve was last tripped and the tripping time, as well as the individual and organization conducting the test, shall be maintained at a location or in a manner readily available for review by the authority having jurisdiction.

**13.4.3.2.13** Low air pressure alarms, if provided, shall be tested quarterly in accordance with the manufacturer's instructions.

**13.4.3.2.14** Low temperature alarms, if installed in valve enclosures, shall be tested annually at the beginning of the heating season.

**13.4.3.2.15** Automatic air pressure maintenance devices, if provided, shall be tested yearly at the time of the annual preaction or deluge valve trip test, in accordance with the manufacturer's instructions.

**13.4.3.3 Maintenance.**

**13.4.3.3.1** Leaks causing drops in supervisory pressure sufficient to sound warning alarms, and electrical malfunctions causing alarms to sound, shall be located and repaired.

Copyright 2015 National Fire Protection Association (NFPA). Licensed, by agreement, for individual use and download on October 23, 2015 to VETERANS AFFAIRS. No other reproduction or transmission in any form permitted without written permission of NFPA. For inquires or to report unauthorized use, contact licensing@nfpa.org.



**13.4.3.3.2** During the annual trip test, the interior of the preaction or deluge valve shall be cleaned thoroughly and the parts replaced or repaired as necessary.

**13.4.3.3.2.1** Interior cleaning and parts replacement or repair shall be permitted every 5 years for valves that can be reset without removal of a faceplate.

**13.4.3.3.3*** Auxiliary drains in preaction or deluge systems shall be operated after each system operation and before the onset of freezing conditions (and thereafter as needed).

**13.4.3.3.4** Additional maintenance as required by the manufacturer's instructions shall be provided.

**13.4.4 Dry Pipe Valves/Quick-Opening Devices.**

**13.4.4.1 Inspection.**

**13.4.4.1.1** Valve enclosures for preaction and deluge valves subject to freezing shall be inspected daily during cold weather to verify a minimum temperature of 40°F (4°C).

**13.4.4.1.1.1** Valve enclosures equipped with low temperature alarms shall be inspected weekly.

**13.4.4.1.1.2** Low temperature alarms, if installed in valve enclosures, shall be inspected annually at the beginning of the heating season to verify that they are free of physical damage.

**13.4.4.1.2 Gauges.**

**13.4.4.1.2.1** The gauge on the supply side of the dry pipe valve shall indicate that the normal supply water pressure is being maintained.

**13.4.4.1.2.2** The gauge on the system side of the dry pipe valve shall indicate that the proper ratio of air or nitrogen pressure to water supply pressure is being maintained in accordance with the manufacturer's instructions.

**13.4.4.1.2.3*** The gauge on the quick-opening device, if provided, shall indicate the same pressure as the gauge on the system side of the dry pipe valve.

**13.4.4.1.2.4** Gauges on systems with low air or nitrogen pressure alarms shall be inspected monthly.

**13.4.4.1.2.5** Gauges on systems other than those with low air or nitrogen pressure alarms shall be inspected weekly.

**13.4.4.1.3** Systems with auxiliary drains shall require a sign at the dry or preaction valve indicating the number of auxiliary drains and location of each individual drain.

**13.4.4.1.4** The dry pipe valve shall be externally inspected monthly to verify the following:

(1) The valve is free of physical damage.
(2) All trim valves are in the appropriate open or closed position.
(3) The intermediate chamber is not leaking.

**13.4.4.1.5** The interior of the dry pipe valve shall be inspected annually when the trip test is conducted.

**13.4.4.1.6** Strainers, filters, and restricted orifices shall be inspected internally every 5 years unless tests indicate a greater frequency is necessary.

**13.4.4.2 Testing.**

**13.4.4.2.1*** The priming water level shall be tested quarterly.

**13.4.4.2.2*** Each dry pipe valve shall be trip tested annually during warm weather.

**13.4.4.2.2.1** Dry pipe valves protecting freezers shall be trip tested in a manner that does not introduce moisture into the piping in the freezers.

**13.4.4.2.2.2*** Every 3 years and whenever the system is altered, the dry pipe valve shall be trip tested with the control valve fully open and the quick-opening device, if provided, in service.

**13.4.4.2.2.3*** During those years when full flow testing in accordance with 13.4.4.2.2.2 is not required, each dry pipe valve shall be trip tested with the control valve partially open.

**13.4.4.2.2.4** When refilling a dry system, the air supply shall be capable of restoring normal air pressure in the system within 30 minutes.

**13.4.4.2.2.5** The requirements of 13.4.4.2.2.4 shall not apply in refrigerated spaces maintained below 5°F (–15°C), where normal system air pressure shall be permitted to be restored within 60 minutes.

**13.4.4.2.3** Grease or other sealing materials shall not be applied to the seating surfaces of dry pipe valves.

**13.4.4.2.4*** Quick-opening devices, if provided, shall be tested quarterly.

**13.4.4.2.5** A tag or card that shows the date on which the dry pipe valve was last tripped, and the name of the person and organization conducting the test, shall be attached to the valve.

**13.4.4.2.5.1** Separate records of initial air and water pressure, tripping air pressure, and dry pipe valve operating conditions shall be maintained on the premises for comparison with previous test results.

**13.4.4.2.5.2** Records of tripping time shall be maintained for full flow trip tests.

**13.4.4.2.6** Low air pressure alarms, if provided, shall be tested quarterly in accordance with the manufacturer's instructions.

**13.4.4.2.7** Low temperature alarms, if installed in valve enclosures, shall be tested annually at the beginning of the heating season.

**13.4.4.2.8** Automatic air pressure maintenance devices, if provided, shall be tested annually during the dry pipe valve trip test in accordance with the manufacturer's instructions.

**13.4.4.2.9** Dry pipe systems shall be tested once every 3 years for gas leakage, using one of the following test methods:

(1) A gas (air or nitrogen) pressure test at 40 psi (3.2 bar) shall be performed for 2 hours.
    (a) The system shall be permitted to lose up to 3 psi (0.2 bar) during the duration of the test.
    (b) Gas leaks shall be addressed if the system loses more than 3 psi (0.2 bar) during this test.
(2) With the system at normal system pressure, the gas source (nitrogen supply, compressor, or shop air) shall be shut off for 4 hours. If the low pressure alarm goes off within this period, the leaks shall be addressed.

**13.4.4.3 Maintenance.**

**13.4.4.3.1** During the annual trip test, the interior of the dry pipe valve shall be cleaned thoroughly, and parts replaced or repaired as necessary.

Copyright 2015 National Fire Protection Association (NFPA). Licensed, by agreement, for individual use and download on October 23, 2015 to VETERANS AFFAIRS. No other reproduction or transmission in any form permitted without written permission of NFPA. For inquires or to report unauthorized use, contact licensing@nfpa.org.



**13.4.4.3.2*** Auxiliary drains in dry pipe sprinkler systems shall be drained after each operation of the system, before the onset of freezing weather conditions, and thereafter as needed.

**13.5 Pressure-Reducing Valves and Relief Valves.**

**13.5.1 Inspection and Testing of Sprinkler Pressure-Reducing Valves.** Sprinkler pressure-reducing valves shall be inspected and tested as described in 13.5.1.1 and 13.5.1.2.

**13.5.1.1** All valves shall be inspected quarterly to verify that the valves are in the following condition:

(1) In the open position
(2) Not leaking
(3) Maintaining downstream pressures in accordance with the design criteria
(4) In good condition, with handwheels installed and unbroken

**13.5.1.2*** A full flow test shall be conducted on each valve at 5-year intervals and shall be compared to previous test results.

**13.5.1.2.1** Adjustments shall be made in accordance with the manufacturer's instructions.

**13.5.1.3** A partial flow test adequate to move the valve from its seat shall be conducted annually.

**13.5.2 Hose Connection Pressure-Regulating Devices.**

**13.5.2.1** All devices shall be inspected annually to verify the following:

(1) The handwheel is not broken or missing.
(2) The outlet hose threads are not damaged.
(3) No leaks are present.
(4) The hose adapter and the cap are not missing.

**13.5.2.2*** A full flow test shall be conducted on each device at 5-year intervals and shall be compared to previous test results.

**13.5.2.2.1** Adjustments shall be made in accordance with the manufacturer's instructions.

**13.5.2.3** A partial flow test adequate to move the device from its seat shall be conducted annually.

**13.5.3 Hose Rack Assembly Pressure-Regulating Devices.**

**13.5.3.1** All devices shall be inspected annually to verify the following:

(1) The handwheel is not missing or broken.
(2) No leaks are present.

**13.5.3.2** A full flow test shall be conducted on each device at 5-year intervals and compared to previous test results.

**13.5.3.2.1** Adjustments shall be made in accordance with the manufacturer's instructions.

**13.5.3.3** A partial flow test adequate to move the device from its seat shall be conducted annually.

**13.5.4 Master Pressure-Regulating Devices.**

**13.5.4.1*** Devices shall be inspected weekly to verify that the devices are in the following condition:

(1)*The downstream pressures are maintained in accordance with the design criteria.
(2) The supply pressure is in accordance with the design criteria.
(3) The devices are not leaking.
(4) The devices and trim are in good condition.

**13.5.4.2*** A partial flow test adequate to move the valve from its seat shall be conducted quarterly.

**13.5.4.3*** A full flow test shall be conducted on each valve annually and shall be compared to previous test results.

**13.5.4.4** When valve adjustments are necessary, they shall be made in accordance with the manufacturer's instructions.

**13.5.5 Pressure-Reducing Valves.**

**13.5.5.1** All pressure-reducing valves installed on fire protection systems not covered by 13.5.1, 13.5.2, 13.5.3, or 13.5.4 shall be inspected in accordance with 13.5.1.1.

**13.5.5.2** All pressure-reducing valves installed on fire protection systems not covered by 13.5.1, 13.5.2, 13.5.3, or 13.5.4 shall be tested in accordance with 13.5.1.2.

**13.5.6 Hose Valves.**

**13.5.6.1 Inspection.**

**13.5.6.1.1** Hose valves shall be inspected quarterly to verify that the valves are in the following condition:

(1) Hose caps are in place and not damaged.
(2) Hose threads are not damaged.
(3) Valve handles are present and not damaged.
(4) Gaskets are not damaged or showing signs of deterioration.
(5) No leaks are present.
(6) Valves are not obstructed or otherwise not capable of normal operation.

**13.5.6.1.2** Hose valves shall be inspected to ensure that hose caps are in place and not damaged.

**13.5.6.1.3** Hose threads shall be inspected for damage.

**13.5.6.1.4** Valve handles shall be present and not damaged.

**13.5.6.1.5** Gaskets shall be inspected for damage or deterioration.

**13.5.6.1.6** Hose valves shall be inspected for leaks.

**13.5.6.1.7** Hose valves shall be inspected to ensure no obstructions are present.

**13.5.6.1.8** Hose valves shall be inspected to ensure that restricting devices are present.

**13.5.6.2 Testing.**

**13.5.6.2.1*** Class I and Class III standpipe system hose valves shall be tested annually by fully opening and closing the valves.

**13.5.6.2.1.1** Class I and Class III standpipe system hose valves that are difficult to operate or leak shall be repaired or replaced.

**13.5.6.2.2*** Hose valves on hose stations attached to sprinkler systems and Class II standpipe systems shall be tested every 3 years by opening and closing the valves.

**13.5.6.2.2.1** Hose valves on hose stations attached to sprinkler systems and Class II standpipe systems that are difficult to operate or leak shall be repaired or replaced.

**13.5.6.3 Maintenance.** Hose valves that do not operate smoothly or open fully shall be lubricated, repaired, or replaced.

Copyright 2015 National Fire Protection Association (NFPA). Licensed, by agreement, for individual use and download on October 23, 2015 to VETERANS AFFAIRS. No other reproduction or transmission in any form permitted without written permission of NFPA. For inquires or to report unauthorized use, contact licensing@nfpa.org.



**13.5.7 Fire Pump Relief Valves.**

**13.5.7.1 Circulation Relief Valves.**

**13.5.7.1.1** Where installed, circulation relief valves shall be inspected on the same frequency as the no-flow (churn) test.

**13.5.7.1.2** The inspection shall verify that water flows through the valve when the fire pump is operating at shutoff pressure (i.e., churn) to prevent the pump from overheating.

**13.5.7.1.3** On completion of any fire pump test, the closure of the circulation relief valve shall be verified.

**13.5.7.2 Main Pressure Relief Valve.**

**13.5.7.2.1** Where installed, main pressure relief valves shall be inspected during any fire pump test.

**13.5.7.2.2** The inspection shall verify that the pressure downstream of the relief valve fittings in the fire pump discharge piping does not exceed the pressure for which the system components are rated.

**13.5.7.2.3** During the annual fire pump flow test, the pressure relief valve shall be verified to be correctly adjusted and set to relieve at the correct pressure and to close below that pressure setting.

**13.5.8 Maintenance.** All damaged or missing components noted during the inspections specified in 13.5.6.1 through 13.5.6.2.2 shall be repaired or replaced in accordance with the manufacturer's instructions.

**13.6 Backflow Prevention Assemblies.**

**13.6.1 Inspection.** Inspection of backflow prevention assemblies shall be as described in 13.6.1.1 through 13.6.1.4.

**13.6.1.1** The isolation valves on double check assemblies (DCA) and double check detector assemblies (DCDA) shall be inspected weekly to ensure that the valves are in the normal open position.

**13.6.1.1.1** Valves secured with locks or electrically supervised in accordance with applicable NFPA standards shall be inspected monthly.

**13.6.1.2** The isolation valves on reduced-pressure assemblies (RPA) and reduced-pressure detector assemblies (RPDA) shall be inspected weekly to ensure that the valves are in the normal open position.

**13.6.1.2.1** Valves secured with locks or electrically supervised in accordance with applicable NFPA standards shall be inspected monthly.

**13.6.1.2.2*** RPAs and RPDAs shall be inspected weekly to ensure that the differential-sensing valve relief port is not continuously discharging.

**13.6.1.3** After any testing or repair, an inspection by the property owner or designated representative shall be made to ensure that the system is in service and all isolation valves are in the normal open position and properly locked or electrically supervised.

**13.6.1.4*** Backflow prevention assemblies shall be inspected internally every 5 years to verify that all components operate correctly, move freely, and are in good condition.

**13.6.2 Testing.**

**13.6.2.1*** All backflow preventers installed in fire protection system piping shall be exercised annually by conducting a forward flow test at a minimum flow rate of the system demand.

**13.6.2.1.1** Where water rationing is enforced during shortages lasting more than 1 year, an internal inspection of the backflow preventer to ensure the check valves will fully open shall be permitted in lieu of conducting the annual forward flow test.

**13.6.2.1.2** The forward flow test shall not be required where annual fire pump testing causes the system flow rate to flow through the backflow preventer device.

**13.6.2.2** Where hydrants or inside hose stations are located downstream of the backflow preventer, the forward flow test shall include hose stream demand.

**13.6.2.3** Where connections do not permit verification of the forward flow test at the minimum flow rate of system demand, tests shall be conducted at the maximum flow rate possible.

**13.6.3 Maintenance.** Maintenance of all backflow prevention assemblies shall be conducted by a qualified individual following the manufacturer's instructions in accordance with the procedure and policies of the authority having jurisdiction.

**13.7 Fire Department Connections.**

**13.7.1** Fire department connections shall be inspected quarterly to verify the following:

(1) The fire department connections are visible and accessible.
(2) Couplings or swivels are not damaged and rotate smoothly.
(3) Plugs or caps are in place and undamaged.
(4) Gaskets are in place and in good condition.
(5) Identification signs are in place.
(6) The check valve is not leaking.
(7) The automatic drain valve is in place and operating properly.
(8) The fire department connection clapper(s) is in place and operating properly.
(9)*Interior of the connection is inspected for obstructions.

**13.7.2** Components shall be repaired or replaced as necessary in accordance with the manufacturer's instructions.

**13.7.3** Any obstructions that are present shall be removed.

**13.7.4** The piping from the fire department connection to the fire department check valve shall be hydrostatically tested at 150 psi (10 bar) for 2 hours at least once every 5 years.

**13.8 Component Testing Requirements.**

**13.8.1** Whenever a valve, valve component, and/or valve trim is adjusted, repaired, reconditioned, or replaced, the action required in Table 13.8.1 shall be performed.

**13.8.2** Where the original installation standard is different from the cited standard, the use of the appropriate installing standard shall be permitted.

**13.8.3*** These actions shall not require a design review.

Copyright 2015 National Fire Protection Association (NFPA). Licensed, by agreement, for individual use and download on October 23, 2015 to VETERANS AFFAIRS. No other reproduction or transmission in any form permitted without written permission of NFPA. For inquires or to report unauthorized use, contact licensing@nfpa.org.



**Table 13.8.1 Summary of Component Replacement Action Requirements**

| Component | Adjust | Repair/ Recondition | Replace | Inspection, Test, and Maintenance Procedures |
|---|---|---|---|---|
| **Water delivery components** | | | | |
| Post indicator and wall indicator valves | X | X | X | (1) Inspect for leaks at system pressure<br>(2) Perform full operational test conforming to 13.3.3.1<br>(3) Perform spring torsion inspection conforming to 13.3.3.1 and 13.3.3.2<br>(4) Verify target visibility at shut and full open position<br>(5) Test supervisory device<br>(6) Main drain test |
| Control valves other than post indicator and wall indicator valves | X | X | X | (1) Inspect for leaks at system pressure<br>(2) Perform full operational test conforming to 13.3.3.1<br>(3) Perform spring torsion inspection for OS&Y valves conforming to 13.3.3.2<br>(4) Verify supervisory device<br>(5) Main drain test |
| Alarm check valve | X | X | X | (1) Inspect for leaks at system pressure per 13.4.1<br>(2) Test all alarms and supervisory signals affected by the alarm valve<br>(3) Main drain test |
| Dry pipe valve | X | X | X | (1) Inspect for leaks at system pressure<br>(2) Trip test per 13.4.4.2<br>(3) Inspect condition of valve seat<br>(4) Test all dry pipe system alarms and supervisory signals<br>(5) Main drain test |
| Deluge/preaction valve | X | X | X | (1) Inspect for leaks at system pressure per 13.4.3<br>(2) Trip test<br>(3) Inspect condition of valve seat<br>(4) Test all deluge/preaction system alarms and supervisory signals<br>(5) Main drain test |
| Quick-opening device | X | X | X | (1) Inspect for leaks at system pressure per 13.4.4.2.2<br>(2) Trip test<br>(3) Main drain test |
| Pressure-regulating device — hose valves | X | X | X | (1) Inspect for leaks at system pressure per 13.5.1<br>(2) Full flow test<br>(3) Main drain test (Only when a control valve has been closed) |
| Pressure-regulating devices — other than hose valves | X | X | X | (1) Inspect for leaks at system pressure per Section 13.5<br>(2) Test pressure setting with full flow and without flow<br>(3) Test supervisory device and alarm<br>(4) Main drain test |
| Hose valve | X | X | X | (1) Inspect for leaks at system pressure per 13.5.6<br>(2) Main drain test |

*(continues)*

Copyright 2015 National Fire Protection Association (NFPA). Licensed, by agreement, for individual use and download on October 23, 2015 to VETERANS AFFAIRS. No other reproduction or transmission in any form permitted without written permission of NFPA. For inquires or to report unauthorized use, contact licensing@nfpa.org.



**Table 13.8.1** *Continued*

| Component | Adjust | Repair/ Recondition | Replace | Inspection, Test, and Maintenance Procedures |
|---|---|---|---|---|
| Backflow prevention device | X | X | X | (1) Inspect for leaks at system pressure per Section 13.6<br>(2) Forward flow test per 13.6.2.1<br>(3) Test supervisory device and alarm<br>(4) Main drain test |
| Check valves | X | X | X | (1) Inspect for leaks at system pressure per 13.4.2<br>(2) Inspect for leaking through check valve<br>(3) Main drain test |
| Fire department connection | X | X | | (1) Inspect for leaks at system pressure per Section 13.7<br>(2) Main drain test (Only when a control valve has been closed) |
| Fire department connection — sprinkler system(s) | | | X | (1) Isolate and hydrostatic test for 2 hours at 150 psi (10 bar)<br>(2) Main drain test (Only when a control valve has been closed) |
| Fire department connection — other than sprinkler system(s) | | | X | (1) Isolate and hydrostatic test for 2 hours at 50 psi (3.5 bar) above the normal working pressure [200 psi (14 bar) minimum]<br>(2) Main drain test (Only when a control valve has been closed) |
| Strainers | X | X | X | Inspect and clean in accordance with manufacturer's instructions |
| Main drain valves | X | X | X | Main drain test per 13.2.5 |
| Gauges | | | X | Calibrate per 13.2.7 |
| **Alarm and supervisory components** | | | | |
| Alarm device | X | X | X | Test for conformance with NFPA 13 and/or *NFPA 72* |
| Supervisory device | X | X | X | Test for conformance with NFPA 13 and/or *NFPA 72* |
| **System protection components** | | | | |
| Pressure relief valve — fire pump installation | X | X | X | See 8.3.3.3 and 13.5.7 |
| Pressure relief valve — other than fire pump installation | | | X | Verify relief valve is listed or approved for the application and set to the correct pressure |
| **Informational components** | | | | |
| Identification signs | X | X | X | Inspect for compliance with NFPA 13 and 13.3.1 |

Copyright 2015 National Fire Protection Association (NFPA). Licensed, by agreement, for individual use and download on October 23, 2015 to VETERANS AFFAIRS. No other reproduction or transmission in any form permitted without written permission of NFPA. For inquires or to report unauthorized use, contact licensing@nfpa.org.



## Chapter 14 Internal Piping Condition and Obstruction Investigation

**14.1* General.** This chapter shall provide the minimum requirements for conducting investigations of fire protection system piping for possible sources of materials that could cause pipe blockage.

**14.2 Assessment of Internal Condition of Piping.**

**14.2.1*** An assessment of the internal condition of piping shall be conducted on a frequency determined by 14.2.1.1 or 14.2.1.2 for the purpose of inspecting for the presence of foreign organic and inorganic material.

**14.2.1.1** An assessment of the internal condition of piping shall be conducted at a minimum of every 5 years or in accordance with 14.2.1.2 for the purpose of inspecting for the presence of foreign organic and inorganic material.

**14.2.1.2*** Where an assessment frequency has been established by an approved risk analysis, the assessment shall be performed at a frequency determined by the approved risk analysis.

**14.2.1.3** Tubercules or slime, if found, shall be tested for indications of microbiologically influenced corrosion (MIC).

**14.2.1.4*** If the presence of sufficient foreign organic or inorganic material is found to obstruct pipe or sprinklers, an obstruction investigation shall be conducted as described in Section 14.3.

**14.2.1.5** Nonmetallic pipe shall not be required to comply with Section 14.2.

**14.2.2*** In buildings having multiple wet pipe systems, every other system shall have an assessment of the internal condition of piping as described in 14.2.1.

**14.2.2.1** During the next inspection frequency required by 14.2.1.1 or 14.2.1.2, the alternate systems not assessed during the previous assessment shall be assessed as described in 14.2.1.

**14.2.2.2** If foreign organic and/or inorganic material is found in any system in a building, all systems shall be assessed.

**14.3 Obstruction Investigation and Prevention.**

**14.3.1*** An obstruction investigation shall be conducted for system or yard main piping wherever any of the following conditions exist:

(1) Defective intake for fire pumps taking suction from open bodies of water
(2) The discharge of obstructive material during routine water tests
(3) Foreign materials in fire pumps, in dry pipe valves, or in check valves
(4) Foreign material in water during drain tests or plugging of inspector's test connection(s)
(5) Unknown materials are heard in the system piping during draining, refilling, or otherwise flowing water through the system
(6) Plugged sprinklers
(7) The presence of sufficient foreign organic or inorganic material is found in the pipe
(8) Failure to flush yard piping or surrounding public mains following new installations or repairs
(9) A record of broken public mains in the vicinity
(10) Abnormally frequent false tripping of a dry pipe valve(s)
(11) A system that is returned to service after an extended shutdown (greater than 1 year)
(12) There is reason to believe that the sprinkler system contains sodium silicate or highly corrosive fluxes in copper systems
(13) A system has been supplied with raw water via the fire department connection
(14) Pinhole leaks
(15) A 50 percent increase in the time it takes water to travel to the inspector's test connection from the time the valve trips during a full flow trip test of a dry pipe sprinkler system when compared to the original system acceptance test

**14.3.2*** Systems shall be examined for internal obstructions where conditions exist that could cause obstructed piping.

**14.3.2.1** If the condition has not been corrected or the condition is one that could result in obstruction of the piping despite any previous flushing procedures that have been performed, the system shall be examined for internal obstructions every 5 years.

**14.3.2.2*** Internal examination shall be performed at the following minimum four points:

(1) System valve
(2) Riser
(3) Cross main
(4) Branch line

**14.3.2.3*** Alternative nondestructive examination methods shall be permitted.

**14.3.3*** If an obstruction investigation indicates the presence of sufficient material to obstruct pipe or sprinklers, a complete flushing program shall be conducted by qualified personnel.

**14.3.4** Tubercules or slime, if found during an obstruction investigation, shall be tested for indications of microbiologically influenced corrosion (MIC).

**14.4 Ice Obstruction.** Dry pipe or preaction sprinkler system piping that protects or passes through freezers or cold storage rooms shall be inspected internally on an annual basis for ice obstructions at the point where the piping enters the refrigerated area.

**14.4.1** Alternative nondestructive examinations shall be permitted.

**14.4.2** All penetrations into the cold storage areas shall be inspected and, if an ice obstruction is found, additional pipe shall be examined to ensure no ice blockage exists.

## Chapter 15 Impairments

**15.1 General.**

**15.1.1 Minimum Requirements.**

**15.1.1.1** This chapter shall provide the minimum requirements for a water-based fire protection system impairment program.

**15.1.1.2** Measures shall be taken during the impairment to ensure that increased risks are minimized and the duration of the impairment is limited.

Copyright 2015 National Fire Protection Association (NFPA). Licensed, by agreement, for individual use and download on October 23, 2015 to VETERANS AFFAIRS. No other reproduction or transmission in any form permitted without written permission of NFPA. For inquires or to report unauthorized use, contact licensing@nfpa.org.



**15.2 Impairment Coordinator.**

**15.2.1** The property owner or designated representative shall assign an impairment coordinator to comply with the requirements of this chapter.

**15.2.2** In the absence of a specific designee, the property owner or designated representative shall be considered the impairment coordinator.

**15.2.3** Where the lease, written use agreement, or management contract specifically grants the authority for inspection, testing, and maintenance of the fire protection system(s) to the tenant, management firm, or managing individual, the tenant, management firm, or managing individual shall assign a person as impairment coordinator.

**15.3 Tag Impairment System.**

**15.3.1*** A tag shall be used to indicate that a system, or part thereof, has been removed from service.

**15.3.2*** The tag shall be posted at each fire department connection and the system control valve, and other locations required by the authority having jurisdiction, indicating which system, or part thereof, has been removed from service.

**15.4 Impaired Equipment.**

**15.4.1** The impaired equipment shall be considered to be the water-based fire protection system, or part thereof, that is removed from service.

**15.4.2** The impaired equipment shall include, but shall not be limited to, the following:

(1) Sprinkler systems
(2) Standpipe systems
(3) Fire hose systems
(4) Underground fire service mains
(5) Fire pumps
(6) Water storage tanks
(7) Water spray fixed systems
(8) Foam-water systems
(9) Water mist systems
(10) Fire service control valves

**15.5* Preplanned Impairment Programs.**

**15.5.1** All preplanned impairments shall be authorized by the impairment coordinator.

**15.5.2** Before authorization is given, the impairment coordinator shall be responsible for verifying that the following procedures have been implemented:

(1) The extent and expected duration of the impairment have been determined.
(2) The areas or buildings involved have been inspected and the increased risks determined.
(3) Recommendations to mitigate any increased risks have been submitted to management or the property owner or designated representative.
(4) Where a fire protection system is out of service for more than 10 hours in a 24-hour period, the impairment coordinator shall arrange for one of the following:
   (a) Evacuation of the building or portion of the building affected by the system out of service
   (b)*An approved fire watch
   (c)*Establishment of a temporary water supply
   (d)*Establishment and implementation of an approved program to eliminate potential ignition sources and limit the amount of fuel available to the fire
(5) The fire department has been notified.
(6) The insurance carrier, the alarm company, property owner or designated representative, and other authorities having jurisdiction have been notified.
(7) The supervisors in the areas to be affected have been notified.
(8) A tag impairment system has been implemented. *(See Section 15.3.)*
(9) All necessary tools and materials have been assembled on the impairment site.

**15.6* Emergency Impairments.**

**15.6.1** Emergency impairments shall include, but are not limited to, interruption of water supply, frozen or ruptured piping, and equipment failure, and includes impairments found during inspection, testing, or maintenance activities.

**15.6.2*** The coordinator shall implement the steps outlined in Section 15.5.

**15.7* Restoring Systems to Service.** When all impaired equipment is restored to normal working order, the impairment coordinator shall verify that the following procedures have been implemented:

(1) Any necessary inspections and tests have been conducted to verify that affected systems are operational. The appropriate chapter of this standard shall be consulted for guidance on the type of inspection and test required.
(2) Supervisors have been advised that protection is restored.
(3) The fire department has been advised that protection is restored.
(4) The property owner or designated representative, insurance carrier, alarm company, and other authorities having jurisdiction have been advised that protection is restored.
(5) The impairment tag has been removed.

## Chapter 16 Special Requirements from Other NFPA Documents

**16.1 General.**

**16.1.1 Application.**

**16.1.1.1*** This chapter shall include the inspection, testing, and maintenance requirements for water-based fire protection systems found in other NFPA standards that are different from those included in this standard.

**16.1.1.2*** The requirements of this chapter shall be extracted from the other referenced standards.

**16.1.1.3** Where the requirements of the referenced standard differ from the requirements of this standard, the referenced standard shall take precedence.

**16.1.2 Definitions.** For terms not defined in Chapter 3, the definitions of the reference standard shall apply.

**16.2 Small Residential Board and Care Occupancies.**

**16.2.1** The requirements in this section shall only apply to residential board and care facilities with sprinkler systems installed in accordance with NFPA 13D, *Standard for the Installa-*

Copyright 2015 National Fire Protection Association (NFPA). Licensed, by agreement, for individual use and download on October 23, 2015 to VETERANS AFFAIRS. No other reproduction or transmission in any form permitted without written permission of NFPA. For inquires or to report unauthorized use, contact licensing@nfpa.org.



*tion of Sprinkler Systems in One- and Two-Family Dwellings and Manufactured Homes*, as described in NFPA *101*, *Life Safety Code*.

**16.2.1.1** Systems installed in accordance with NFPA 13D, *Standard for the Installation of Sprinkler Systems in One- and Two-Family Dwellings and Manufactured Homes*, shall be inspected, tested, and maintained in accordance with 33.2.3.5.8.1 through 33.2.3.5.8.15 of NFPA *101*, which reference specific sections of NFPA 25. The frequency of the inspection, test, or maintenance shall be in accordance with [NFPA *101*], whereas the purpose and procedure shall be from NFPA 25. [***101***:33.2.3.5.8]

**16.2.1.1.1** Control valves shall be inspected monthly in accordance with 13.3.2 of NFPA 25. [***101***:33.2.3.5.8.1]

**16.2.1.1.2** Gages shall be inspected monthly in accordance with 13.2.7.1 of NFPA 25. [***101***:33.2.3.5.8.2]

**16.2.1.1.3** Alarm devices shall be inspected quarterly in accordance with 5.2.5 of NFPA 25. [***101***:33.2.3.5.8.3]

**16.2.1.1.4** Alarm devices shall be tested semiannually in accordance with 5.3.3 of NFPA 25. [***101***:33.2.3.5.8.4]

**16.2.1.1.5** Valve supervisory switches shall be tested semiannually in accordance with 13.3.3.5 of NFPA 25. [***101***:33.2.3.5.8.5]

**16.2.1.1.6** Visible sprinklers shall be inspected annually in accordance with 5.2.1 of NFPA 25. [***101***:33.2.3.5.8.6]

**16.2.1.1.7** Visible pipe shall be inspected annually in accordance with 5.2.2 of NFPA 25. [***101***:33.2.3.5.8.7]

**16.2.1.1.8** Visible pipe hangers shall be inspected annually in accordance with 5.2.3 of NFPA 25. [***101***:33.2.3.5.8.8]

**16.2.1.1.9** Buildings shall be inspected annually prior to the onset of freezing weather to ensure that there is adequate heat wherever water-filled piping is run in accordance with 5.2.5 of NFPA 25. [***101***:33.2.3.5.8.9]

**16.2.1.1.10** A representative sample of fast-response sprinklers shall be tested once the sprinklers in the system are 20 years old in accordance with 5.3.1.1.1.3 of NFPA 25. If the sample fails the test, all of the sprinklers represented by that sample shall be replaced. If the sprinklers pass the test, the test shall be repeated every 10 years thereafter. [***101***:33.2.3.5.8.10]

**16.2.1.1.11** A representative sample of dry-pendent sprinklers shall be tested once the sprinklers in the system are 10 years old in accordance with 5.3.1.1.1.6 of NFPA 25. If the sample fails the test, all of the sprinklers represented by that sample shall be replaced. If the sprinklers pass the test, the test shall be repeated every 10 years thereafter. [***101***:33.2.3.5.8.11]

**16.2.1.1.12** Antifreeze solutions shall be tested annually in accordance with 5.3.4 of NFPA 25. [***101***:33.2.3.5.8.12]

**16.2.1.1.13** Control valves shall be operated through their full range and returned to normal annually in accordance with 13.3.3.1 of NFPA 25. [***101***:33.2.3.5.8.13]

**16.2.1.1.14** Operating stems of OS&Y valves shall be lubricated annually in accordance with 13.3.4 of NFPA 25. [***101***:33.2.3.5.8.14]

**16.2.1.1.15** Dry-pipe systems that extend into the unheated portions of the building shall be inspected, tested, and maintained in accordance with 13.4.4 of NFPA 25. [***101***:33.2.3.5.8.15]

## Annex A Explanatory Material

*Annex A is not a part of the requirements of this NFPA document but is included for informational purposes only. This annex contains explanatory material, numbered to correspond with the applicable text paragraphs.*

**A.1.1.1.2** There are times when a single inspection or test can meet the requirements of both NFPA 25 and *NFPA 72* (e.g., operation of a tamper switch). This standard does not necessarily require that two separate inspections or tests be conducted on the same component, provided the inspection or test meets the requirements of both standards and the individual performing the inspection or test is qualified to perform the inspection or test required by both standards.

**A.1.1.3** Generally accepted NFPA installation practices for water-based fire protection systems relevant to this standard are found in the following:

NFPA 13, *Standard for the Installation of Sprinkler Systems*

NFPA 13R, *Standard for the Installation of Sprinkler Systems in Low-Rise Residential Occupancies*

NFPA 14, *Standard for the Installation of Standpipe and Hose Systems*

NFPA 15, *Standard for Water Spray Fixed Systems for Fire Protection*

NFPA 16, *Standard for the Installation of Foam-Water Sprinkler and Foam-Water Spray Systems*

NFPA 20, *Standard for the Installation of Stationary Pumps for Fire Protection*

NFPA 22, *Standard for Water Tanks for Private Fire Protection*

NFPA 24, *Standard for the Installation of Private Fire Service Mains and Their Appurtenances*

NFPA 750, *Standard on Water Mist Fire Protection Systems*

**A.1.1.3.1** The requirement to evaluate the adequacy of the design of the installed system is not a part of the periodic inspection, testing, and maintenance requirements of this standard. However, such evaluation is the responsibility of the property owner or designated representative as indicated in 4.1.6 and 4.1.7.

**A.1.1.4** For systems originally installed in accordance with one of these standards, the repair, replacement, alteration, or extension of such systems should also be performed in accordance with that same standard. When original installations are based on other applicable codes or standards, repair, replacement, alteration, or extension practices should be conducted in accordance with those other applicable codes or standards.

**A.1.2** History has shown that the performance reliability of a water-based fire protection system under fire-related conditions increases where comprehensive inspection, testing, and maintenance procedures are enforced. Diligence during an inspection is important. The inspection, testing, and maintenance of some items in the standard might not be practical or possible, depending on existing conditions. The inspector should use good judgment when making inspections.

**A.1.3** An entire program of quality control includes, but is not limited to, maintenance of equipment, inspection frequency, testing of equipment, on-site fire brigades, loss control provisions, and personnel training. Personnel training can be used as an alternative even if a specific frequency differs from that specified in this standard.

Copyright 2015 National Fire Protection Association (NFPA). Licensed, by agreement, for individual use and download on October 23, 2015 to VETERANS AFFAIRS. No other reproduction or transmission in any form permitted without written permission of NFPA. For inquires or to report unauthorized use, contact licensing@nfpa.org.



**A.1.4** The liter and bar units, which are not part of but are recognized by SI, commonly are used in international fire protection. These units are provided in Table A.1.4 with their conversion factors.

**Table A.1.4 Metric Conversions**

| Name of Unit | Unit Symbol | Conversion Factor |
|---|---|---|
| liter | L | 1 gal = 3.785 L |
| liter per minute per square meter | $L/min \cdot m^2$ | 1 $gpm/ft^2$ = 40.746 $L/min \cdot m^2$ |
| cubic decimeter | $dm^3$ | 1 gal = 3.785 $dm^3$ |
| pascal | Pa | 1 psi = 6894.757 Pa |
| bar | bar | 1 psi = 0.0689 bar |
| bar | bar | 1 bar = $10^5$ Pa |

Note: For additional conversions and information, see IEEE/ASTM-SI-10, *American National Standard for Use of the International System of Units (SI): The Modern Metric System.*

**A.3.2.1 Approved.** The National Fire Protection Association does not approve, inspect, or certify any installations, procedures, equipment, or materials; nor does it approve or evaluate testing laboratories. In determining the acceptability of installations, procedures, equipment, or materials, the authority having jurisdiction may base acceptance on compliance with NFPA or other appropriate standards. In the absence of such standards, said authority may require evidence of proper installation, procedure, or use. The authority having jurisdiction may also refer to the listings or labeling practices of an organization that is concerned with product evaluations and is thus in a position to determine compliance with appropriate standards for the current production of listed items.

**A.3.2.2 Authority Having Jurisdiction (AHJ).** The phrase "authority having jurisdiction," or its acronym AHJ, is used in NFPA documents in a broad manner, since jurisdictions and approval agencies vary, as do their responsibilities. Where public safety is primary, the authority having jurisdiction may be a federal, state, local, or other regional department or individual such as a fire chief; fire marshal; chief of a fire prevention bureau, labor department, or health department; building official; electrical inspector; or others having statutory authority. For insurance purposes, an insurance inspection department, rating bureau, or other insurance company representative may be the authority having jurisdiction. In many circumstances, the property owner or his or her designated agent assumes the role of the authority having jurisdiction; at government installations, the commanding officer or departmental official may be the authority having jurisdiction.

**A.3.2.3 Listed.** The means for identifying listed equipment may vary for each organization concerned with product evaluation; some organizations do not recognize equipment as listed unless it is also labeled. The authority having jurisdiction should utilize the system employed by the listing organization to identify a listed product.

**A.3.3.2 Alarm Receiving Facility.** This can include proprietary supervising stations, central supervising stations, remote supervising stations, or public fire service communications centers.

**A.3.3.3 Automatic Detection Equipment.** Water spray systems can use fixed temperature, rate-of-rise, rate-compensation fixed temperature, optical devices, flammable gas detectors, or products of combustion detectors.

**A.3.3.4 Automatic Operation.** This operation includes, but is not limited to, heat, rate of heat rise, smoke, or pressure change.

**A.3.3.7 Deficiency.** Depending on the nature and significance of the deficiency, it can result in a system impairment. Critical deficiencies will adversely impact performance but without the need for the implementing impairment procedures. Noncritical deficiencies have the potential to impact performance.

Table A.3.3.7 provides examples for classifying conditions needing repair or correction that are identified during the inspection, testing, and maintenance of water-based suppression systems. The conditions are classified as an impairment, critical deficiency, or noncritical deficiency. The table is not all-inclusive but is included to provide guidance in responding to these conditions. For example, an impairment should be addressed promptly by either immediately correcting the condition or implementing the impairment procedures found in Chapter 15. Critical and noncritical deficiencies should be corrected as soon as practical after considering the nature and severity of the risk. It should be noted that many jurisdictions have requirements for the timely correction of impairments and/or deficiencies.

**Table A.3.3.7 Water-Based Fire Protection System Inspection and Testing Findings**

| Item | Finding | Reference | Impairment | Critical Deficiency | Noncritical Deficiency |
|---|---|---|---|---|---|
| **Chapter 5: Sprinkler Systems — Inspection** | | | | | |
| All sprinklers | Leaking — spraying or running water | 5.2.1.1.1 | X | | |
| All sprinklers | Leaking — dripping water | 5.2.1.1.1 | | X | |
| All sprinklers | Foreign material attached or suspended from | 5.2.1.1.1 | X | | |
| All sprinklers | Spray pattern obstructed — less than 18 in. (457 mm) or 36 in. 915 mm) below deflector (stock, furnishings, and equipment), temporary or nonpermanent (signs, banners, decorations, etc.) | 5.2.1.1.1 | | X | |
| All sprinklers | Lightly loaded | 5.2.1.1.1 | | | X |

Copyright 2015 National Fire Protection Association (NFPA). Licensed, by agreement, for individual use and download on October 23, 2015 to VETERANS AFFAIRS. No other reproduction or transmission in any form permitted without written permission of NFPA. For inquires or to report unauthorized use, contact licensing@nfpa.org.



**Table A.3.3.7** ***Continued***

| Item | Finding | Reference | Impairment | Critical Deficiency | Noncritical Deficiency |
|---|---|---|---|---|---|
| Standard-response sprinklers in nonresidential occupancies | One sprinkler and less than 50% of sprinklers in compartment is heavily loaded or corroded; painted operating element, bulb, deflector, or coverplate; improper orientation; glass bulb has lost fluid | 5.2.1.1.1 | | X | |
| Standard-response sprinklers in nonresidential occupancies | Two or more sprinklers in compartment are heavily loaded or corroded; painted operating element, bulb, deflector, or coverplate; improper orientation; glass bulb has lost fluid | 5.2.1.1.1 | X | | |
| Fast-response element, quick-response, residential sprinklers and standard-response in residential occupancies | Any sprinklers, heavily loaded or corroded; painted operating element, bulb, deflector, or coverplate; improper orientation; glass bulb has lost fluid | 5.2.1.1.1 | X | | |
| Coverplates | Concealed sprinkler coverplates caulked or glued to ceiling | 5.2.1.1.1 | X | | |
| Escutcheons and coverplates | Missing recessed or flush escutcheons, concealed coverplate with deflector and operating element in correct position | 5.2.1.1.6 | | | X |
| Escutcheons and coverplates | Missing recessed or flush escutcheons, concealed coverplate with deflector and operating element not in correct position | 5.2.1.1.6 | X | | |
| Escutcheons | Recessed or flush escutcheons caulked or glued to ceiling | 5.2.1.1.1 | | X | |
| Spare sprinkler cabinet | Cabinet missing, temperature over 100°F, not proper number and type, missing wrench for each type | new 5.2.1.3(1), 5.2.1.3(2) | | | X |
| Pipe and fittings | Leaking — slowly dripping and/or moisture on surface | 5.2.2.1 | | X | |
| Pipe and fittings | Leaking — spraying or running water | 5.2.2.1 | X | | |
| Pipe and fittings | Critical mechanical damage | | | X | |
| Hangers and seismic braces | Damaged or loose | 5.2.3.2 | | | X |
| Hangers and seismic braces | Unattached | 5.2.3.2 | | X | |
| Gauges | Poor condition | 5.2.4.1 | | | X |
| Gauges | Not showing normal water/air pressure | 5.2.4.1, 5.2.4.2 | | X | |
| Gauges | Freezer — system pressure lower than compressor | 5.2.4.4 | X | | |
| Alarm devices | Physical damage apparent | 5.2.5 | | | X |
| Hydraulic design information sign | Not attached properly, illegible or missing | 5.2.6 | | | X |
| Information sign | Not attached, illegible or missing | new | | | X |
| Heat tape | Not in accordance with manufacturer's instructions | 5.2.7 | | X | |
| **Chapter 5: Sprinkler Systems — Testing** | | | | | |
| Gauges | Not replaced or calibrated in 5 years, not accurate within 3% of scale | 5.3.2 | | | X |
| Alarm devices | Water motor and gong not functioning | 5.3.3 | | | X |
| Alarm devices | Pressure switch– or vane-type switch not functioning or no alarm | 5.3.3 | | X | |

*(continues)*

Copyright 2015 National Fire Protection Association (NFPA). Licensed, by agreement, for individual use and download on October 23, 2015 to VETERANS AFFAIRS. No other reproduction or transmission in any form permitted without written permission of NFPA. For inquires or to report unauthorized use, contact licensing@nfpa.org.



**Table A.3.3.7** ***Continued***

| Item | Finding | Reference | Impairment | Critical Deficiency | Noncritical Deficiency |
|---|---|---|---|---|---|
| Antifreeze systems | Mixture and concentration does not meet requirements of 5.3.4.2.1 | 5.3.4 | | X | |
| Antifreeze systems | Concentration is inadequate to prevent freezing | Table A.5.3.4.2.1(1) | X | | |
| Main drain | More than 10% drop in full flow pressure | 13.2.5.2 | | X | |
| Assessment of internal condition | Inspection revealed presence of MIC, zebra mussels, rust, and scale | 14.2.1 | | X | |
| **Chapter 6: Standpipe and Hose Systems — Inspection** | | | | | |
| Pipe and fittings | Leaking — slowly dripping and/or moisture on surface | 6.2.1 | | X | |
| Pipe and fittings | Leaking — spraying or running water | 6.2.1 | X | | |
| Pipe and fittings | Critical mechanical damage | 6.2.1 | | X | |
| Hose | Cuts, couplings not of compatible threads | 6.2.1, NFPA 1962 | | X | |
| Hose | Deterioration, no gasket or damaged gaskets | 6.2.1, NFPA 1962 | | X | |
| Hose | Mildew present, corrosion present, hose not connected | 6.2.1, NFPA 1962 | | | X |
| Hose nozzle | Missing, broken parts or thread gasket damaged | 6.2.1, NFPA 1962 | | X | |
| Hose storage | Hose not properly racked or rolled, nozzle clip missing, nozzle not contained, damaged, obstructed | 6.2.1, NFPA 1962 | | X | |
| Cabinet | Corroded or damaged parts, not easy to open, not accessible, not identified, door glazing in poor condition, lock not functioning in break glass type, valve, hose nozzle, fire extinguisher, etc. not readily accessible | 6.2.1, NFPA 1962 | | X | |
| Hydraulic design information sign | Missing | 6.2.3 | | | X |
| **Chapter 6: Standpipe and Hose Systems — Testing** | | | | | |
| Hose storage device | Rack will not swing out of cabinet at least 90 degrees | 6.2.1, NFPA 1962 | | | X |
| Standpipe system | Test results did not provide design pressure at required flow | 6.3.1.1 | | X | |
| Hydrostatic test of manual and semiautomatic dry standpipe systems | Leakage in inside piping | 6.3.2 | | | X |
| Main drain | More than 10% drop in full flow pressure | 6.3.1.5 | | X | |
| Assessment of internal condition | Inspection revealed presence of MIC, zebra mussels, rust, and scale | 14.2.1 | | X | |
| **Chapter 7: Private Fire Service Mains — Inspection** | | | | | |
| Exposed piping | Leaking — slowly dripping, and/or moisture on surface | 7.2.2.1.2 | | X | |
| Exposed piping | Leaking — spraying or running water | 7.2.2.1.2 | X | | |
| Exposed piping | Mechanical damage, corroded, not properly restrained | 7.2.2.1.2 | | X | |
| Mainline strainers | Plugged, fouled | 7.2.2.3 | X | | |
| Mainline strainers | Corroded | 7.2.2.3 | | X | |
| Dry barrel, wet barrel, and wall hydrant | Inaccessible, barrel contains ice, cracks in barrel | 7.2.2.4 | X | | |
| Dry barrel, wet barrel, and wall hydrant | Barrel contains water, improper drainage from barrel, leaks at outlets or top of hydrant | 7.2.2.4 | | X | |
| Dry barrel, wet barrel, and wall hydrant | Tightness of outlets, worn nozzle threads, worn operating nut, missing wrench | 7.2.2.4 | | | X |
| Monitor nozzles | Damaged, corroded, leaking | 7.2.2.6 | | X | |

Copyright 2015 National Fire Protection Association (NFPA). Licensed, by agreement, for individual use and download on October 23, 2015 to VETERANS AFFAIRS. No other reproduction or transmission in any form permitted without written permission of NFPA. For inquires or to report unauthorized use, contact licensing@nfpa.org.



**Table A.3.3.7** ***Continued***

| Item | Finding | Reference | Impairment | Critical Deficiency | Noncritical Deficiency |
|---|---|---|---|---|---|
| Hose/hydrant houses | Inaccessible | 7.2.2.7 | X | | |
| Hose/hydrant houses | Damaged | 7.2.2.7 | | X | |
| Hose/hydrant houses | Not fully equipped | 7.2.2.7 | | | X |
| **Chapter 7: Private Fire Service Mains — Testing** | | | | | |
| Underground and exposed piping | Test results not comparable to previous results | 7.3.1 | | X | |
| Dry barrel and wall hydrant | Hydrant did not flow clear or did not drain within 60 minutes | 7.3.2.1, 7.3.2.4 | | | X |
| Monitor nozzles | Did not flow acceptable amount of water, did not operate throughout their full range | 7.3.3.1 7.3.3.2 | | X | |
| **Chapter 8: Fire Pumps — Inspection** | | | | | |
| Pump house/room | Ventilating louvers not free to operate | 8.2.2 | | X | |
| Pump house/room | Heat not adequate, temperature less than 40°F | 8.2.2(1) | X | | |
| Pump house/room | Heat not adequate, temperature less than 70°F for diesel pumps without engine heaters | 8.2.2(1) | X | | |
| Pump house/room | Heat not adequate, temperature less than 40°F, not as recommended by the engine manufacturer, for diesel pumps with engine heaters | 8.2.2(1) | X | | |
| Pump system | Suction, discharge, or bypass valves not fully open, pipe leaking, suction line and system line pressure not normal, wet pit suction screens obstructed | 8.2.2 | X | | |
| Pump system suction | Reservoir empty | 8.2.2 | X | | |
| Pump system | Suction reservoir does not have required water level, wet pit suction screens missing | 8.2.2 | | X | |
| Pump system | Minor leaking or drips on floor | 8.2.2(2) | | | X |
| Pump system | Suction, discharge, or bypass valves not fully open, major leaking such as spraying or leaking to extent that pump performance might be questioned | 8.2.2(2) | X | | |
| Electrical power to pump system | No electrical power — controller pilot light not illuminated, transfer switch pilot light not illuminated, isolating switch not closed, reverse phase alarm pilot light on or normal phase light is off, oil level in vertical motor sight glass not normal | 8.2.2(3) | X | | |
| Electrical power to pump system | Electrical power is provided — controller pilot light not illuminated, transfer switch pilot light not illuminated, reverse phase alarm pilot light on, normal phase light is not illuminated | 8.2.2(3) | | | X |
| Electrical power to pump system | Circuit breakers and fuses tripped/open | 8.2.2(3) | X | | |
| Diesel engine system | Fuel tank empty | 8.2.2 | X | | |
| Diesel engine system | Alarm pilot lights are on | 8.2.2(4) | | X | |
| Diesel engine system | Battery charging current not normal | 8.2.2(4) | | X | |
| Diesel engine system | Battery failure pilot lights on | 8.2.2(4) | | X | |
| Diesel engine system | Battery pilot lights off | 8.2.2(4) | | X | |
| Diesel engine system | Battery terminals corroded | 8.2.2(4) | | X | |
| Diesel engine system | Battery voltage readings not normal | 8.2.2(4) | | X | |
| Diesel engine system | Controller selector switch not in auto position | 8.2.2(4) | X | | |

*(continues)*

Copyright 2015 National Fire Protection Association (NFPA). Licensed, by agreement, for individual use and download on October 23, 2015 to VETERANS AFFAIRS. No other reproduction or transmission in any form permitted without written permission of NFPA. For inquires or to report unauthorized use, contact licensing@nfpa.org.



**Table A.3.3.7** ***Continued***

| Item | Finding | Reference | Impairment | Critical Deficiency | Noncritical Deficiency |
|---|---|---|---|---|---|
| Diesel engine system | Cooling water level not normal | 8.2.2(4) | | | X |
| Diesel engine system | Cooling water level not visible | 8.2.2(4) | | X | |
| Diesel engine system | Crankcase oil level not normal | 8.2.2(4) | | | X |
| Diesel engine system | Crankcase oil level below low level | 8.2.2(4) | X | | |
| Diesel engine system | Electrolyte level in batteries not normal | 8.2.2(4) | | | X |
| Diesel engine system | Electrolyte level in batteries below top of battery plates | 8.2.2(4) | | X | |
| Diesel engine system | Engine running time meter not reading | 8.2.2(4) | | | X |
| Diesel engine system | Fuel tank less than two-thirds full | 8.2.2(4) | | X | |
| Diesel engine system | Water-jacket heater not operating | 8.2.2(4) | | X | |
| Diesel engine system | Oil level in right angle gear drive not normal (not at level mark but visible in sight glass) | 8.2.2(4) | | | X |
| Diesel engine system | Oil level in right angle gear drive below low level (not visible in sight glass or below one finger knuckle for inspection hole) | 8.2.2(4) | | X | |
| Steam system | Steam pressure gauge reading not normal | 8.2.2 | | X | |
| **Chapter 8: Fire Pumps — Testing** | | | | | |
| Fire pump test | Pump did not start automatically | 8.3.2.2 | X | | |
| | Pump failed to run for 10 minutes | 8.3.2.3 | X | | |
| | Pump failed to run for 30 minutes | 8.3.2.4 | X | | |
| Fire pump test — pump system | System suction and discharge gauge reading, or pump starting pressure not acceptable | 8.3.2.8(1) | | X | |
| Fire pump test — pump system | Pump packing gland discharge not acceptable, unusual noise or vibration, packing boxes, bearings, or pump casing overheating | 8.3.2.8(1) | | X | |
| Fire pump test — electrical motor–driven system | Time for motor to accelerate to full speed, time controller is on first step, or time pump runs after starting not acceptable | 8.3.2.8(2) | X | | |
| Fire pump test — diesel engine–driven system | Time for engine to crank and time for engine to reach running speed not acceptable (engine to reach rated speed within 20 seconds per 11.2.7.1 of NFPA 20, 2013 edition) | 8.3.2.8(3) | | X | |
| Fire pump test — diesel engine–driven system | Low rpm | 8.3.2.8(3) | X | | |
| Fire pump test — diesel engine–driven system | Low oil pressure, high temperature, high cooling water pressure | 8.3.2.8(3) | | X | |
| Fire pump test — diesel engine–driven system | Time for engine to crank and time for engine to reach running speed not acceptable, low rpm, low oil pressure, high temperature, high cooling water pressure | 8.3.2 | | X | |
| Fire pump test — steam system | Gauge reading and time for turbine to reach running speed not acceptable | 8.3.2 | | X | |
| Fire pump test — steam system | Gauge reading and time for turbine to reach running speed not acceptable | 8.3.2.8(4) | X | | |
| Fire pump annual test | Circulation relief valve and/or pressure relief valve did not work properly at churn condition | 8.3.3.2(1) | | X | |
| Fire pump annual test | Pressure relief valve did not work properly at each flow condition | 8.3.3.3 | | X | |

Copyright 2015 National Fire Protection Association (NFPA). Licensed, by agreement, for individual use and download on October 23, 2015 to VETERANS AFFAIRS. No other reproduction or transmission in any form permitted without written permission of NFPA. For inquires or to report unauthorized use, contact licensing@nfpa.org.



**Table A.3.3.7** ***Continued***

| Item | Finding | Reference | Impairment | Critical Deficiency | Noncritical Deficiency |
|---|---|---|---|---|---|
| Fire pump annual test (with transfer switch) | Overcurrent protective devices opened when simulating a power failure condition at peak load, power not transferred to alternate source, pump did not continue to perform at peak load, pump did not reconnect to normal power after removing power failure condition | 8.3.3.4 | X | | |
| Fire pump annual test | Alarms did not properly operate | 8.3.3.5 | | X | |
| Pump house/room | Heating, lighting, ventilating systems did not pass test | 8.3.4.3 | | X | |
| Fire pump annual test | Parallel or angular alignment not correct | 8.3.4.4 | | X | |
| Fire pump annual test | Flow test results not within 5% of acceptance test or nameplate | 8.3.5.4 | | X | |
| Fire pump annual test | Voltage readings at motor not within 5% below or 10% above rated (nameplate) | 8.3.5.6 | | X | |
| Fire pump annual test | Flow test results not within 5% of initial unadjusted acceptance test or nameplate | 8.3.5.4 | | X | |
| **Chapter 9: Water Storage Tanks — Inspection** | | | | | |
| Water level | Water level and/or condition not correct | 9.2.1 | | X | |
| Water level | Tank is empty | 9.2.1 | X | | |
| Air pressure | Air pressure in pressure tanks not correct | 9.2.2 | X | | |
| Heating system | Heating system not operational, water temperature below 40°F | 9.2.3 | | X | |
| Heating system | Water temperature at or below 32°F | 9.2.3 | X | | |
| Exterior | Tank exterior, supporting structure, vents, foundation, catwalks, or ladders where provided damaged | 9.2.5.1 | | | X |
| Exterior | Area around tank has fire exposure hazard in form of combustible storage, trash, debris, brush, or material | 9.2.5.2 | | | X |
| Exterior | Accumulation of material on or near parts that could result in accelerated corrosion or rot | 9.2.5.2 | | | X |
| Exterior | Ice buildup on tank and support | 9.2.5.2 | | X | |
| Exterior | Erosion exists on exterior sides or top of embankments supporting coated fabric tanks | 9.2.5.2 | | | X |
| Exterior | Expansion joints leaking or cracking | 9.2.5.3 | | X | |
| Exterior | Hoops and grilles of wooden tanks in poor condition | 9.2.5.4 | | | X |
| Exterior | Exterior painted, coated, or insulated surfaces of tanks or supporting structure degraded | 9.2.5.5 | | | X |
| Interior (pressure tanks or steel tanks w/o corrosion protection every 3 years, all others every 5 years) | Pitting, corrosion, spalling, rot, other forms of deterioration, waste materials exist, aquatic growth, local or general failure of interior coating | 9.2.6.3 | | | X |
| Interior (pressure tanks or steel tanks w/o corrosion protection every 3 years, all others every 5 years) | Voids beneath floor, with sand in middle of tanks on ring-type foundations | 9.2.6.5 | | | X |
| Interior (pressure tanks or steel tanks w/o corrosion protection every 3 years, all others every 5 years) | Heating system components or piping in poor condition but working | 9.2.6.6 | | | X |

*(continues)*

Copyright 2015 National Fire Protection Association (NFPA). Licensed, by agreement, for individual use and download on October 23, 2015 to VETERANS AFFAIRS. No other reproduction or transmission in any form permitted without written permission of NFPA. For inquires or to report unauthorized use, contact licensing@nfpa.org.



**Table A.3.3.7** ***Continued***

| Item | Finding | Reference | Impairment | Critical Deficiency | Noncritical Deficiency |
|---|---|---|---|---|---|
| Interior (pressure tanks or steel tanks w/o corrosion protection every 3 years, all others every 5 years) | Heating system components or heating system piping in poor condition and not working | 9.2.6.6 | X | | |
| Interior (pressure tanks or steel tanks w/o corrosion protection every 3 years, all others every 5 years) | Blockage of antivortex plate | 9.2.6.7 | X | | |
| Interior (pressure tanks or steel tanks w/o corrosion protection every 3 years, all others every 5 years) | Deterioration of antivortex plate | 9.2.6.7 | | X | |
| **Chapter 9: Water Storage Tanks — Testing** | | | | | |
| Interior testing | Tank coating did not pass adhesion, coating thickness, or wet sponge test | 9.2.7 | | | X |
| Interior testing | Tank walls and bottoms did not pass ultrasonic test | 9.2.7 | | | X |
| Interior testing | Tank bottom seams did not pass vacuum-box test | 9.2.7 | | | X |
| Testing | Level indicator not tested after 5 years, lacked freedom of movement, or not accurate | 9.3.1 | | X | |
| Testing | Low water temperature alarm did not pass test | 9.3.3 | | X | |
| Testing | High water temperature limit switch did not pass test | 9.3.4 | | | X |
| Testing | High and low water level alarms did not pass test | 9.3.5 | | X | |
| Gauges | Not tested in 5 years, not accurate within 3% of scale | 9.3.6 | | | X |
| **Chapter 10: Water Spray Fixed Systems — Inspection** | | | | | |
| Pipe and fittings | Mechanical damage, missing or damaged paint or coating, rusted or corroded, not properly aligned or trapped sections, low point drains not functioning, improper location of rubber-gasketed fittings | 10.2.4.1 | | X | |
| Hangers and seismic braces | Damaged or missing, not securely attached to structural or piping, missing or damaged paint or coating, rusted or corroded | 10.2.4.2 | | X | |
| Water spray nozzles | Discharge devices missing, not properly positioned or pointed in design direction, loaded or corroded | 10.2.5.1 | | X | |
| Water spray nozzles | Missing caps or plugs if required, or not free to operate as intended | 10.2.5.2 | | X | |
| Strainers | Strainer plugged or fouled | 10.2.7 | X | | |
| Strainers | Strainer damaged or corroded | 10.2.7 | | | X |
| Drainage | Trap sumps and drainage trenches blocked, retention embankments or dikes in disrepair | 10.2.8 | | | X |
| Ultra-high-speed | Detectors have physical damage or deposits on lenses of optical detectors | 10.4.2 | | X | |
| Ultra-high-speed | Controllers found to have faults | 10.4.3 | | X | |
| **Chapter 10: Water Spray Fixed Systems — Testing** | | | | | |
| Operational test | Heat detection system did not operate within 40 seconds, flammable gas detection system did not operate within 20 seconds | 10.3.4.1.1 | X | | |

Copyright 2015 National Fire Protection Association (NFPA). Licensed, by agreement, for individual use and download on October 23, 2015 to VETERANS AFFAIRS. No other reproduction or transmission in any form permitted without written permission of NFPA. For inquires or to report unauthorized use, contact licensing@nfpa.org.



**Table A.3.3.7** ***Continued***

| Item | Finding | Reference | Impairment | Critical Deficiency | Noncritical Deficiency |
|---|---|---|---|---|---|
| Operational test | Nozzles plugged | 10.3.4.3.1 | X | | |
| Operational test | Nozzles not correctly positioned | 10.3.4.3.1 | | X | |
| Operational test | Pressure readings not comparable to original design requirements | 10.3.4.4 | | X | |
| Operational test | Manual actuation devices did not work properly | 10.3.6 | X | | |
| Main drain | More than 10% drop in full flow pressure | 10.3.7.1 | | X | |
| Ultra-high-speed operational test | Response time was more than 100 milliseconds | 10.4.5 | X | | |
| Assessment of the internal condition | Inspection revealed presence of MIC, zebra mussels, rust, and scale | 14.2.1 | | X | |
| **Chapter 11: Foam-Water Sprinkler Systems — Inspection** | | | | | |
| Alarm devices | Physical damage apparent | 11.1.3.1.3 | | | X |
| Pipe and fittings | Mechanical damage, missing or damaged paint or coating, rusted or corroded, not properly aligned or trapped sections, low point drains not functioning, improper location or poor condition of rubber-gasketed fittings | 11.2.3 | | X | |
| Hangers and seismic braces | Damaged or missing, not securely attached to structural or piping, missing or damaged paint or coating, rusted or corroded | 11.2.4 | | X | |
| Foam-water discharge devices | Discharge devices missing | 11.2.5.1 | X | | |
| Foam-water discharge devices | Discharge devices not properly positioned or pointed in design direction, loaded or corroded | 11.2.5.1 | | X | |
| Foam-water discharge devices | Not free to operate as intended | 11.2.5.2 | | X | |
| Foam-water discharge devices | Missing caps or plugs if required | 11.2.5.2 | | X | |
| Foam-water discharge devices | Incorrect foam concentrate for application and devices | 11.2.5.4 | | X | |
| Foam concentrate strainers | Blow-down valve open or not plugged | 11.2.7.2 | | X | |
| Drainage | Trap sumps and drainage trenches blocked, retention embankments or dikes in disrepair | 11.2.8 | | | X |
| Proportioning systems (all) | Proportioning system valves not in correct open/closed position in accordance with specified operating conditions | 11.2.9.3 | X | | |
| Proportioning systems (all) | Concentrate tank does not have correct quantity required by original design | 11.2.9.4 | | X | |
| Proportioning systems (all) | Concentrate tank empty | 11.2.9.4 | X | | |
| Standard pressure proportioner | Automatic drains (ball drip valves) not free or open, external corrosion on foam concentrate tanks | 11.2.9.5.1 | | | X |
| Bladder tank proportioner | Water control valve to foam concentrate in "closed" position | 11.2.9.5.2 | X | | |
| Bladder tank proportioner | Foam in water surrounding bladder | 11.2.9.5.2 | X | | |
| Bladder tank proportioner | External corrosion on foam concentrate tank | 11.2.9.5.2 | | | X |
| Line proportioner | Strainer damaged, corroded, pressure vacuum vent not operating freely | 11.2.9.5.3 | | X | |
| Line proportioner | Strainer plugged or fouled | 11.2.9.5.3 | X | | |
| Line proportioner | External corrosion on foam concentrate tank | 11.2.9.5.3 | | | X |
| Standard balanced pressure proportioner | Sensing line valves not open, no power to foam liquid pump | 11.2.9.5.4 | X | | |

*(continues)*

Copyright 2015 National Fire Protection Association (NFPA). Licensed, by agreement, for individual use and download on October 23, 2015 to VETERANS AFFAIRS. No other reproduction or transmission in any form permitted without written permission of NFPA. For inquires or to report unauthorized use, contact licensing@nfpa.org.



**Table A.3.3.7** ***Continued***

| Item | Finding | Reference | Impairment | Critical Deficiency | Noncritical Deficiency |
|---|---|---|---|---|---|
| Standard balanced pressure proportioner | Strainer damaged, corroded, plugged, or fouled, pressure vacuum vent not operating freely, gauges damaged or not showing proper pressures | 11.2.9.5.4 | | X | |
| In-line balanced pressure proportioner | Sensing line valves at pump unit or individual proportioner stations not open, no power to foam liquid pump | 11.2.9.5.5 | X | | |
| In-line balanced pressure proportioner | Strainer damaged, corroded, pressure vacuum vent not operating freely, gauges damaged or not showing proper pressures | 11.2.9.5.5 | | X | |
| In-line balanced pressure proportioner | Strainer plugged or fouled | 11.2.9.5.5 | X | | |
| Orifice plate proportioner | No power to foam liquid pump | 11.2.9.5.6 | X | | |
| Orifice plate proportioner | Strainer damaged, corroded, pressure vacuum vent not operating freely, gauges damaged or not showing proper pressures | 11.2.9.5.6 | | X | |
| Orifice plate proportioner | Strainer plugged or fouled | 11.2.9.5.6 | X | | |
| **Chapter 11: Foam-Water Sprinkler Systems — Testing** | | | | | |
| Alarm devices | Water motor and gong not functioning | 11.1.3.1.1, 11.3.1.1 | | X | |
| Alarm devices | Pressure switch or vane-type switch not functioning or no alarm | 11.1.3.1.2, 11.3.1.2 | | X | |
| Operational test | Fire detection system did not operate within requirements of *NFPA 72* | 11.3.2.4 | | X | |
| Operational test | Nozzles plugged | 11.3.2.6.1 | X | | |
| Operational test | Nozzles not correctly positioned | 11.3.2.6.1 | | X | |
| Operational test | Pressure readings not comparable to original design requirements | 11.3.2.7.3 | | X | |
| Operational test | Manual actuation devices not working properly | 11.3.4 | X | | |
| Operational test | Foam sample failed concentration test | 11.3.5 | X | | |
| Main drain | More than 10% drop in full flow pressure | 13.2.5.2 | | X | |
| Assessment of internal condition | Inspection revealed presence of MIC, zebra mussels, rust, and scale | 14.2.1 | | X | |
| **Chapter 13: Valves, Valve Components, and Trim — Inspection** | | | | | |
| Gauges | Poor condition | 13.2.7.1 | | | X |
| Gauges | Not showing normal water/air pressure | 13.2.7.1 | | X | |
| Control valve | Improper closed position | 13.3.2.2 | X | | |
| Control valve | Improper open position, leaking | 13.3.2.2 | | X | |
| Control valve | Not accessible, no appropriate wrench if required, no identification | 13.3.2.2 | | | X |
| Control valve | Not sealed, locked, or supervised | 13.3.2.2 | | X | |
| Alarm valve | External physical damage, trim valves not in appropriate open or closed position, retard chamber or alarm drain leaking | 13.4.1.1 | | X | |
| Valve enclosure | Upon visual observation, enclosure not maintaining minimum 40°F (4°C) temperature | 13.4.3.1.1, 13.4.4.1.1 | | X | |
| Valve enclosure | Low temperature alarms (if installed) are physically damaged | 13.4.3.1.1, 13.4.4.1.1 | | X | |

Copyright 2015 National Fire Protection Association (NFPA). Licensed, by agreement, for individual use and download on October 23, 2015 to VETERANS AFFAIRS. No other reproduction or transmission in any form permitted without written permission of NFPA. For inquires or to report unauthorized use, contact licensing@nfpa.org.



**Table A.3.3.7** ***Continued***

| Item | Finding | Reference | Impairment | Critical Deficiency | Noncritical Deficiency |
|---|---|---|---|---|---|
| Preaction valve and deluge valve | External physical damage, trim valves not in appropriate open or closed position, valve seat leaking | 13.4.3.1.6 | | X | |
| Preaction valve and deluge valve | Electrical components not in service | 13.4.3.1.6 | X | | |
| Dry pipe valve/quick-opening device | External physical damage, trim valves not in appropriate open or closed position, intermediate chamber leaking | 13.4.4.1.4 | | X | |
| Sprinkler pressure-reducing control valves | Not in open position | 13.5.1.1 | X | | |
| Sprinkler pressure-reducing control valves | Not maintaining downstream pressures in accordance with design criteria | 13.5.1.1 | | X | |
| Sprinkler pressure-reducing control valves | Leaking, valve damaged, hand wheel missing or broken | 13.5.1.1 | | X | |
| Hose connection pressure-reducing valves | Hand wheel broken or missing, hose threads damaged, leaking, reducer missing | 13.5.2.1 | | X | |
| Hose connection pressure-reducing valves | Cap missing | 13.5.2.1 | | | X |
| Hose rack assembly pressure-reducing valve | Hand wheel broken or missing, leaking | 13.5.3.1 | | X | |
| Hose valves | Leaking, visible obstructions, caps, hose threads, valve handle, cap gasket, no restricting device, damaged, or in poor condition | 13.5.6.1 | | X | |
| Hose valves | Hose threads not compatible | 13.5.6.1 | X | | |
| Backflow prevention assemblies | Reduced-pressure assemblies, differential-sensing valve relief port continuously discharging | 13.6.1.2 | | X | |
| Fire department connection | Not accessible, damaged couplings, or clapper not operating properly or missing | 13.7.1 | X | | |
| Fire department connection | Couplings and swivels damaged, do not rotate smoothly, check valve leaking, automatic drain not operating properly or missing | 13.7.1 | | X | |
| Fire department connection | Missing identification sign | 13.7.1 | | | X |
| **Chapter 13: Valves, Valve Components, and Trim — Testing** | | | | | |
| Main drain | More than 10% drop in full flow pressure | 13.2.5.2 | | X | |
| Alarm devices | Water motor and gong not functioning | 13.2.6.1 | | X | |
| Alarm devices | Pressure switch or vane-type switch not functioning, no alarm | 13.2.6.2 | | X | |
| Gauges | Not replaced or calibrated in 5 years, not accurate within 3% of scale | 13.2.7.2, 13.2.7.3 | | | X |
| Control valve | Valve not operating through its full range | 13.3.3.1 | | X | |
| Control valve | No spring or torsion felt in rod when opening post indicator valve | 13.3.3.2 | X | | |
| Supervisory switches | No signal from two revolutions of hand wheel from normal position or when stem has moved one-fifth of distance from normal position, signal restored in position other than normal | 13.3.3.5.2 | | X | |
| Preaction valve | Priming water level not correct | 13.4.3.2.1 | | X | |

*(continues)*

Copyright 2015 National Fire Protection Association (NFPA). Licensed, by agreement, for individual use and download on October 23, 2015 to VETERANS AFFAIRS. No other reproduction or transmission in any form permitted without written permission of NFPA. For inquires or to report unauthorized use, contact licensing@nfpa.org.



**Table A.3.3.7** ***Continued***

| Item | Finding | Reference | Impairment | Critical Deficiency | Noncritical Deficiency |
|---|---|---|---|---|---|
| Preaction valve | Pressure reading at hydraulically most remote nozzle and/or at valve not comparable to original design values | 13.4.4.2.2.2 | | X | |
| Preaction valve | Three-year leakage test failed | 13.4.3.2.6 | | X | |
| Deluge valve | Annual full flow trip test revealed plugged nozzles, manual actuation devices did not operate properly | 13.4.3.2.2.3 | X | | |
| Deluge valve | Pressure reading at hydraulically most remote nozzle and/or at valve not compatible with original design values | 13.4.3.2.2.3 | | X | |
| Preaction valve | Low air pressure switch did not send signal, no alarm | 13.4.3.2.12 | | X | |
| Preaction and deluge valve | Low temperature switch did not send signal, no alarm | 13.4.3.2.13 | | X | |
| Preaction valve | Automatic air maintenance device did not pass test | 13.4.3.2.14 | | | X |
| Dry pipe valve | Priming water level not correct | 13.4.4.2.1 | | X | |
| Dry pipe valve | Test results not comparable with previous results | 13.4.4.2.2 | | X | |
| Quick-opening device | Quick-opening device did not pass test | 13.4.4.2.4 | | X | |
| Dry pipe valve | Low air pressure switch did not send signal, no alarm | 13.4.4.2.6 | | X | |
| Dry pipe valve | Low temperature switch did not send signal, no alarm | 13.4.4.2.7 | | X | |
| Dry pipe valve | Automatic air maintenance device did not pass test | 13.4.4.2.8 | | X | |
| Dry pipe system | Three-year leakage test failed | 13.4.4.2.9 | | X | |
| Sprinkler pressure-reducing control valves | Test results not comparable to previous results | 13.5.1.2 | | X | |
| Hose connection pressure-reducing valves | Test results not comparable to previous results | 13.5.2.2 | | X | |
| Hose rack assembly pressure-reducing valve | Test results not comparable to previous results | 13.5.3.2 | | X | |
| Hose valves (Class I and Class III standpipe system) | Annual test revealed valve leaking or difficult to operate | 13.5.6.2.1.1 | | X | |
| Hose valves (Class II standpipe system) | Test revealed valve leaking or difficult to operate | 13.5.6.2.2, 13.5.6.2.2.1 | | X | |
| Backflow prevention assemblies | Did not pass forward flow test | 13.6.2.1 | X | | |

The table does not take into account every variation of the conditions needing repair or correction. For example, a single lightly painted sprinkler in a large warehouse might be noncritical in its risk while a single painted sprinkler in a battery-charging station might be considered a critical deficiency or perhaps an impairment. In addition, the nature of the hazard or the life safety exposure of the occupancy should be considered when assigning a classification. The table should be used with good judgment and could require input from the authority having jurisdiction.

**A.3.3.10.2 Sectional Drain.** An example of a sectional drain is a drain located beyond a floor control valve on a multistory building.

**A.3.3.12 Fire Hydrant.** See Figure A.3.3.12(a) and Figure A.3.3.12(b).

**A.3.3.12.1 Dry Barrel Hydrant (Frostproof Hydrant).** A drain is located at the bottom of the barrel above the control valve seat for proper drainage after operation to prevent freezing. See Figure A.3.3.12.1.

**A.3.3.12.2 Monitor Nozzle Hydrant.** See Figure A.3.3.12.2.

**A.3.3.12.3 Wall Hydrant.** See Figure A.3.3.12.3.

**A.3.3.12.4 Wet Barrel Hydrant.** See Figure A.3.3.12.4.

**A.3.3.13 Foam Concentrate.** For the purpose of this document, *foam concentrate* and *concentrate* are used interchangeably.

**A.3.3.16 Hose House.** See Figure A.3.3.16(a) through Figure A.3.3.16(c).

**A.3.3.19.1 Conventional Pin Rack.** See Figure A.3.3.19.1.

**A.3.3.19.2 Horizontal Rack.** See Figure A.3.3.19.2.

**A.3.3.19.3 Hose Reel.** See Figure A.3.3.19.3.

**A.3.3.19.4 Semiautomatic Hose Rack Assembly.** See Figure A.3.3.19.4.

Copyright 2015 National Fire Protection Association (NFPA). Licensed, by agreement, for individual use and download on October 23, 2015 to VETERANS AFFAIRS. No other reproduction or transmission in any form permitted without written permission of NFPA. For inquires or to report unauthorized use, contact licensing@nfpa.org.



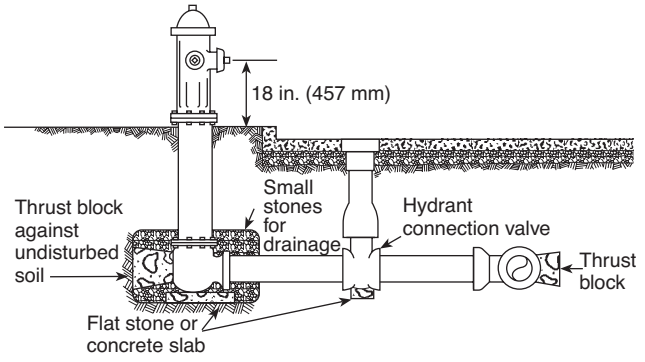


**FIGURE A.3.3.12(a) Typical Fire Hydrant Connection.**

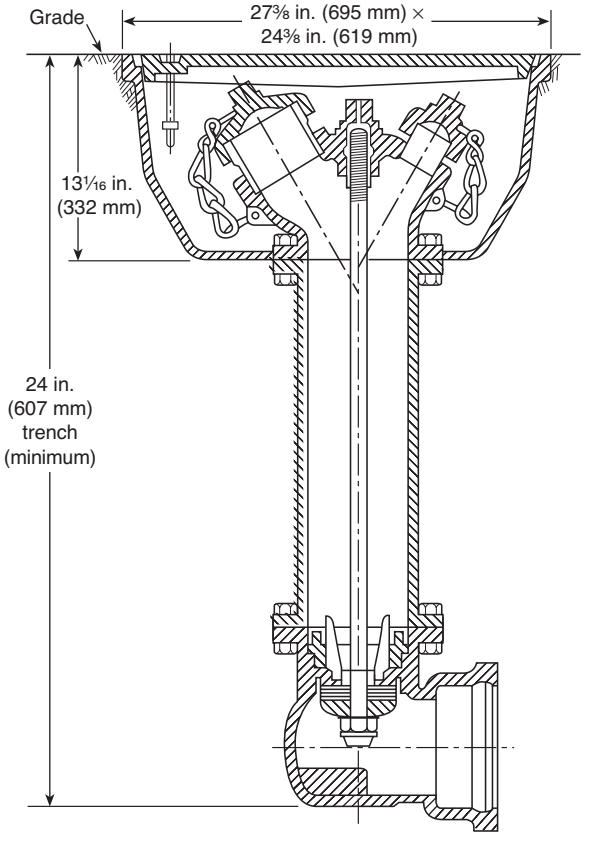


**FIGURE A.3.3.12(b) Flush-Type Hydrant.**

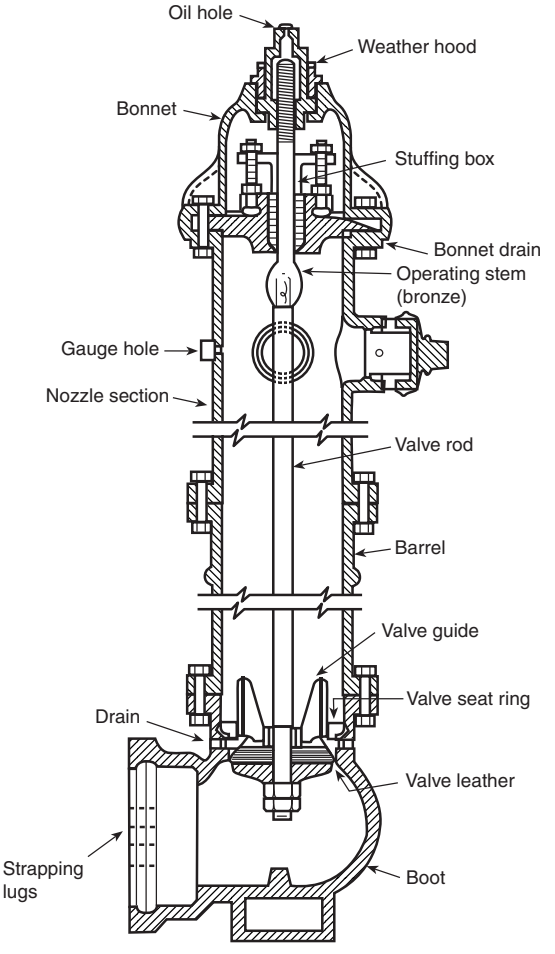


**FIGURE A.3.3.12.1 Dry Barrel Hydrant.**

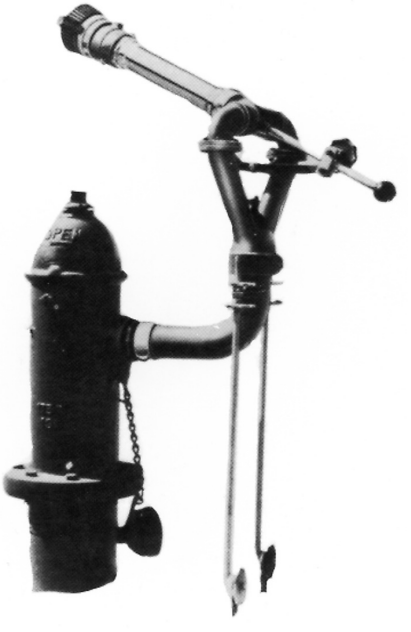

**FIGURE A.3.3.12.2 Hydrant with Monitor Nozzle.**

Copyright 2015 National Fire Protection Association (NFPA). Licensed, by agreement, for individual use and download on October 23, 2015 to VETERANS AFFAIRS. No other reproduction or transmission in any form permitted without written permission of NFPA. For inquires or to report unauthorized use, contact licensing@nfpa.org.



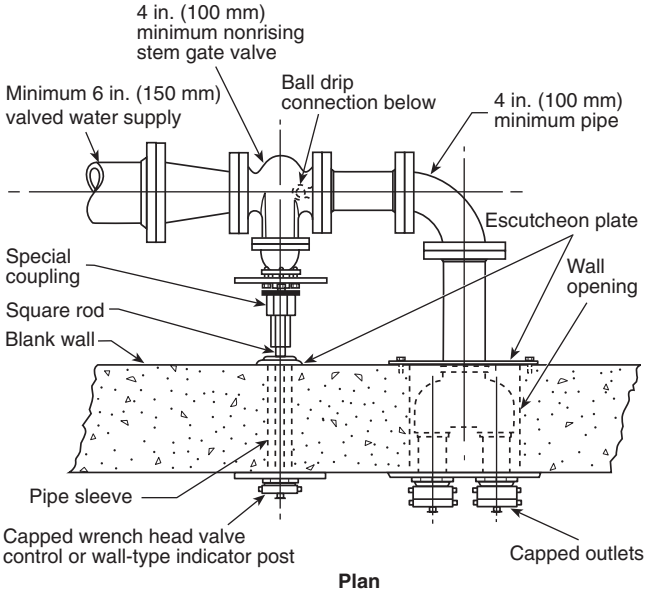


**FIGURE A.3.3.12.3 Wall Hydrant.**

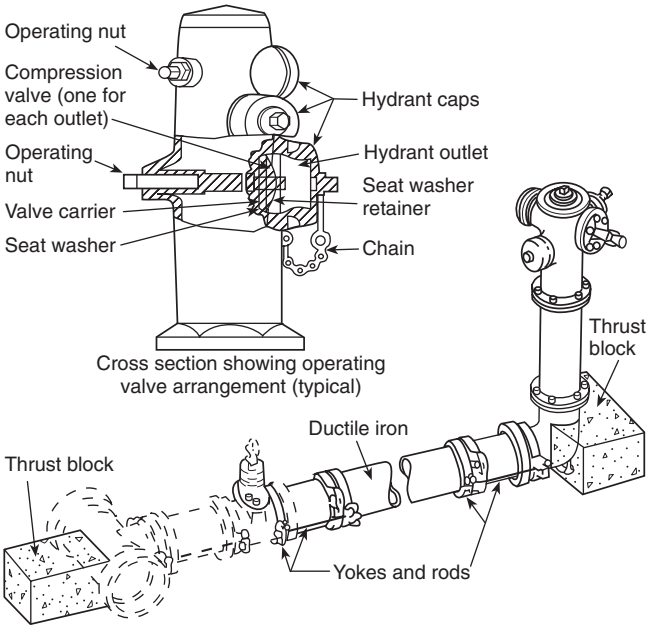


**FIGURE A.3.3.12.4 Wet Barrel Hydrant.** ***(Courtesy of the Los Angeles Department of Water and Power.)***

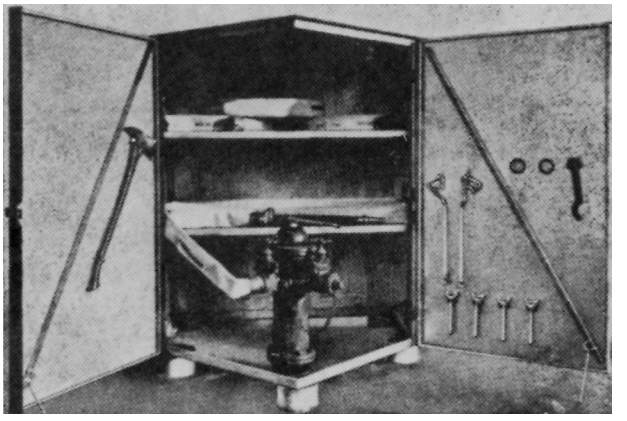

**FIGURE A.3.3.16(a) Hose House of Five-Sided Design for Installation over Private Hydrant.**

**FIGURE A.3.3.16(b) Steel Hose House of Compact Dimensions for Installation over Private Hydrant. House is shown closed; top lifts up, and doors on front side open for complete accessibility.**

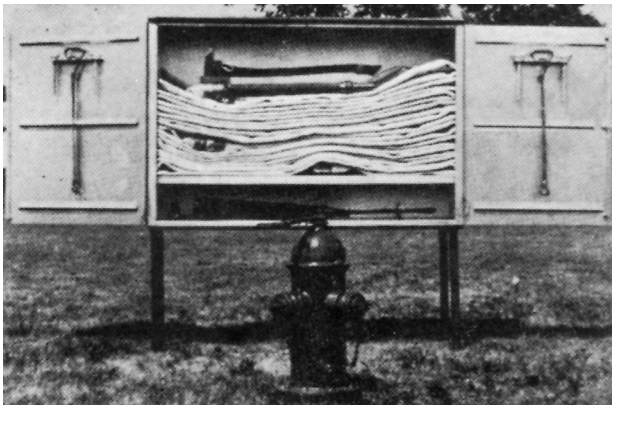

**FIGURE A.3.3.16(c) Hose House That Can Be Installed on Legs, As Pictured, or on Wall Near, but Not Directly over, Private Hydrant.**

Copyright 2015 National Fire Protection Association (NFPA). Licensed, by agreement, for individual use and download on October 23, 2015 to VETERANS AFFAIRS. No other reproduction or transmission in any form permitted without written permission of NFPA. For inquires or to report unauthorized use, contact licensing@nfpa.org.



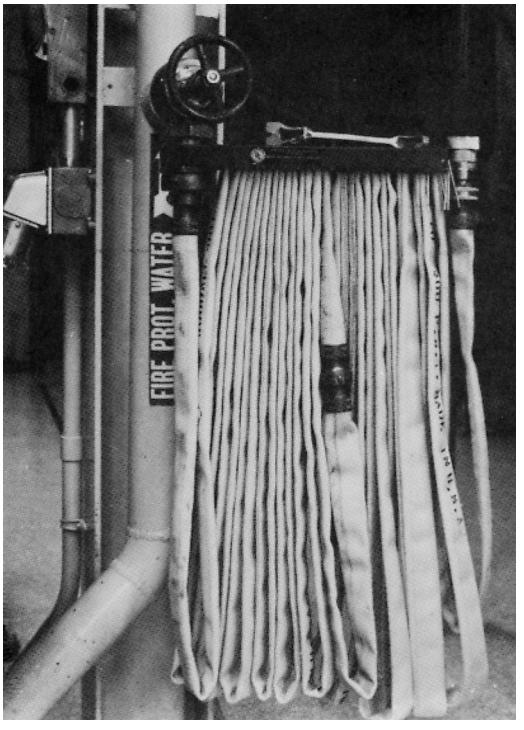


**FIGURE A.3.3.19.1 Conventional Pin Rack.**

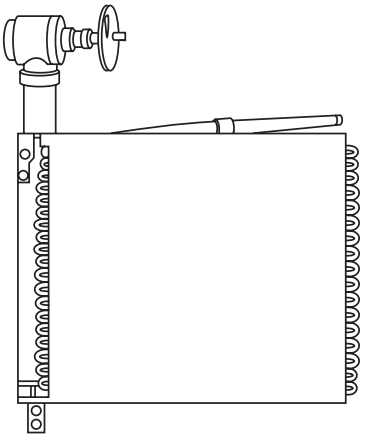

**FIGURE A.3.3.19.2 Horizontal Rack.**

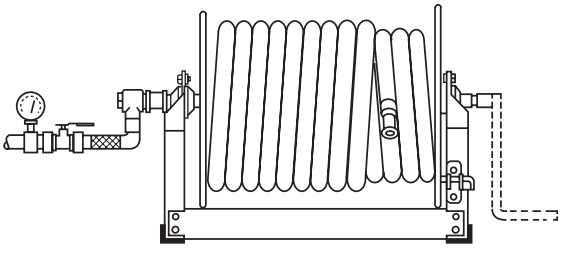

**FIGURE A.3.3.19.3 Constant Flow Hose Reel.**

**FIGURE A.3.3.19.4 Semiautomatic Hose Rack Assembly.**

**A.3.3.21 Impairment.** The use of the phrase *fire protection system or unit* is a broad reference to those terms used in titles of Chapters 5 through 12. Some fire protection features are referred to as systems in the installation standards (e.g., sprinkler, standpipe, water spray, foam-water, and water mist), or are referred to as units (e.g., fire pumps), and others use neither term (e.g., private service fire mains and water tanks). For the purpose of this standard, the term *unit* refers to a fire pump and its connections required by NFPA 20, or a water storage tank and its connections required by NFPA 22, or a private service fire main and its connections required by NFPA 24. The use of the term *unit* in the definitions of impairment, deficiency, critical deficiency, and noncritical deficiency is not referring to an individual component such as a sprinkler, valve, fitting, switch, piece of pipe, and so forth.

Temporarily shutting down a system as part of performing the routine inspection, testing, and maintenance on that system while under constant attendance by qualified personnel, and where the system can be restored to service quickly, should not be considered an impairment. Good judgment should be considered for the hazards presented.

**A.3.3.21.1 Emergency Impairment.** Examples of emergency impairments might include a ruptured pipe, an operated sprinkler, or an interruption of the water supply to the system.

**A.3.3.24 Inspection, Testing, and Maintenance Service.** This program includes logging and retention of relevant records.

**A.3.3.27.1 Monitor Nozzle.** Monitor nozzles can be used to protect large amounts of combustible materials, aircraft, tank farms, and any other special hazard. See Figure A.3.3.27.1(a) and Figure A.3.3.27.1(b).

**A.3.3.27.2 Water Spray Nozzle.** The selection of the type and size of spray nozzles should have been made with proper consideration given to factors such as physical character of the hazard involved, draft or wind conditions, material likely to be burning, and the general purpose of the system.

High velocity spray nozzles, generally used in piped installations, discharge in the form of a spray-filled cone. Low velocity spray nozzles usually deliver a much finer spray in the form of either a spray-filled spheroid or cone. Due to differences in the size of orifices or waterways in the various nozzles and the range of water particle sizes produced by each type, nozzles of one type cannot ordinarily be substituted for those of another type in an individual installation without seriously affecting fire extinguishment. In general, the higher the velocity and

Copyright 2015 National Fire Protection Association (NFPA). Licensed, by agreement, for individual use and download on October 23, 2015 to VETERANS AFFAIRS. No other reproduction or transmission in any form permitted without written permission of NFPA. For inquires or to report unauthorized use, contact licensing@nfpa.org.



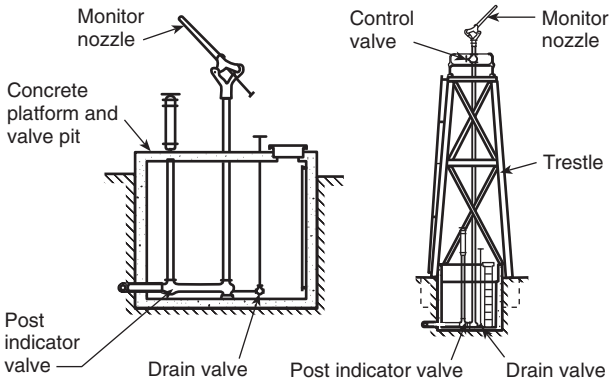


**FIGURE A.3.3.27.1(a) Standard Monitor Nozzles; Gear Control Nozzles Also Are Permitted.**

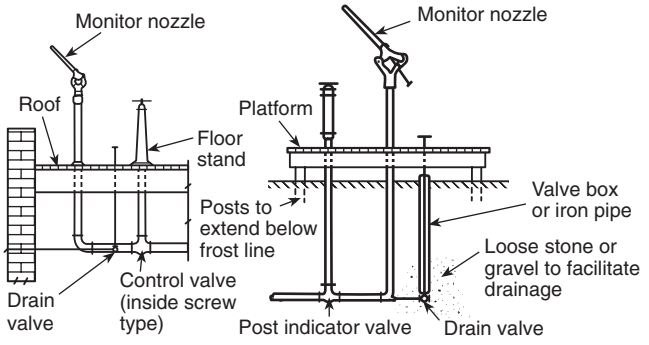


**FIGURE A.3.3.27.1(b) Alternative Arrangement of Standard Monitor Nozzles.**

the coarser the size of the water droplets, the greater the effective "reach" or range of the spray.

Another type of water spray nozzle uses the deflector principle of the standard sprinkler. The angle of the spray discharge cones is governed by the design of the deflector. Some manufacturers make spray nozzles of this type individually automatic by constructing them with heat-responsive elements as used in standard automatic sprinklers.

**A.3.3.30 Pressure-Regulating Device.** Examples include pressure-reducing valves, pressure control valves, and pressure-restricting devices.

**A.3.3.32 Pressure Vacuum Vent.** At rest (static condition), this device is closed to prevent free breathing of the foam concentrate storage tank. See Figure A.3.3.32.

**A.3.3.33 Proportioner.** See Figure A.3.3.33.

**A.3.3.33.1 Bladder Tank Proportioner.** Operation is the same as a standard pressure proportioner, except that, because of the separation of the foam concentrate and water, this system can be used with all foam concentrates, regardless of specific gravity. See Figure A.3.3.33.1.

**A.3.3.33.2 In-Line Balanced Pressure Proportioner.** Balancing of water and liquid takes place at individual proportioners located in the system riser or in segments of multiple systems. See Figure A.3.3.33.2.

**A.3.3.33.3 Line Proportioner.** See Figure A.3.3.33.3.

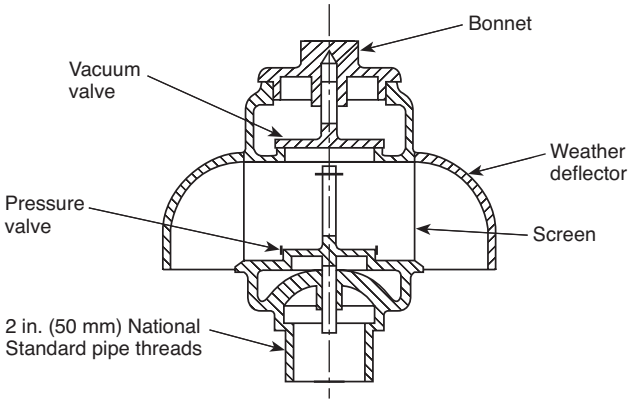


**FIGURE A.3.3.32 Pressure Vacuum Vent.**

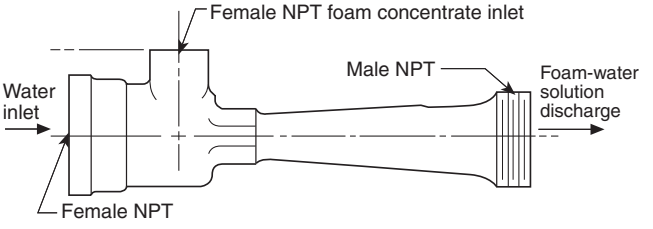


**FIGURE A.3.3.33 Proportioner.**

**A.3.3.33.4 Standard Balanced Pressure Proportioner.** Water and foam concentrate-sensing lines are directed to the balancing valve and maintain the foam liquid at a pressure equal to that of the water pressure. The two equal pressures are fed to the proportioner proper and are mixed at a predetermined rate. See Figure A.3.3.33.4.

**A.3.3.33.5 Standard Pressure Proportioner.** Pressurized concentrate then is forced through an orifice back into the flowing water stream. This type of system is applicable for use with foam concentrates having a specific gravity substantially higher than water. It is not applicable for use with foam concentrates with a specific gravity at or near that of water. See Figure A.3.3.33.5.

**A.3.3.40.2 Control Mode Specific Application (CMSA) Sprinkler.** A large drop sprinkler is a type of CMSA sprinkler that is capable of producing characteristic large water droplets and that is listed for its capability to provide fire control of specific high-challenge fire hazards.

**A.3.3.41 Standpipe System.** This is accomplished by means of connections to water supply systems or by means of pumps, tanks, and other equipment necessary to provide an adequate supply of water to the hose connections.

**A.3.3.44 Strainer.** There are two types of strainers. Pipeline strainers are used in water supply connections. These are capable of removing from the water all solids of sufficient size to obstruct the spray nozzles [⅛ in. (3.2 mm) perforations usually are suitable]. Pipeline strainer designs should incorporate a flushout connection or should be capable of flushing through the main drain.

Individual strainers for spray nozzles, where needed, are capable of removing from the water all solids of sufficient size to obstruct the spray nozzle that they serve.

Copyright 2015 National Fire Protection Association (NFPA). Licensed, by agreement, for individual use and download on October 23, 2015 to VETERANS AFFAIRS. No other reproduction or transmission in any form permitted without written permission of NFPA. For inquires or to report unauthorized use, contact licensing@nfpa.org.



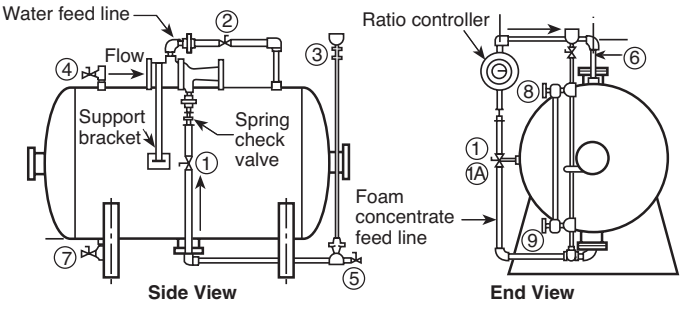


| Valve description | | Normal position | |
|---|---|---|---|
| Valve no. | Description | Manual system | Auto system |
| 1 | Concentrate shutoff | Closed | Closed |
| 1A | Auto. conc. shutoff | N/A | Closed |
| 2 | Water pres. shutoff | Open | Open |
| 3 | Fill cup shutoff | Closed | Closed |
| 4 | Tank water vent | Closed | Closed |
| 5 | Diaph. conc. vent | Closed | Closed |
| 6 | Water fill | Closed | Closed |
| 7 | Concentrate drain/fill | Closed | Closed |
| 8 | Upr. sight gauge (opt.) | Closed | Closed |
| 9 | Lwr. sight gauge (opt.) | Closed | Closed |

**FIGURE A.3.3.33.1 Bladder Tank Proportioner.**

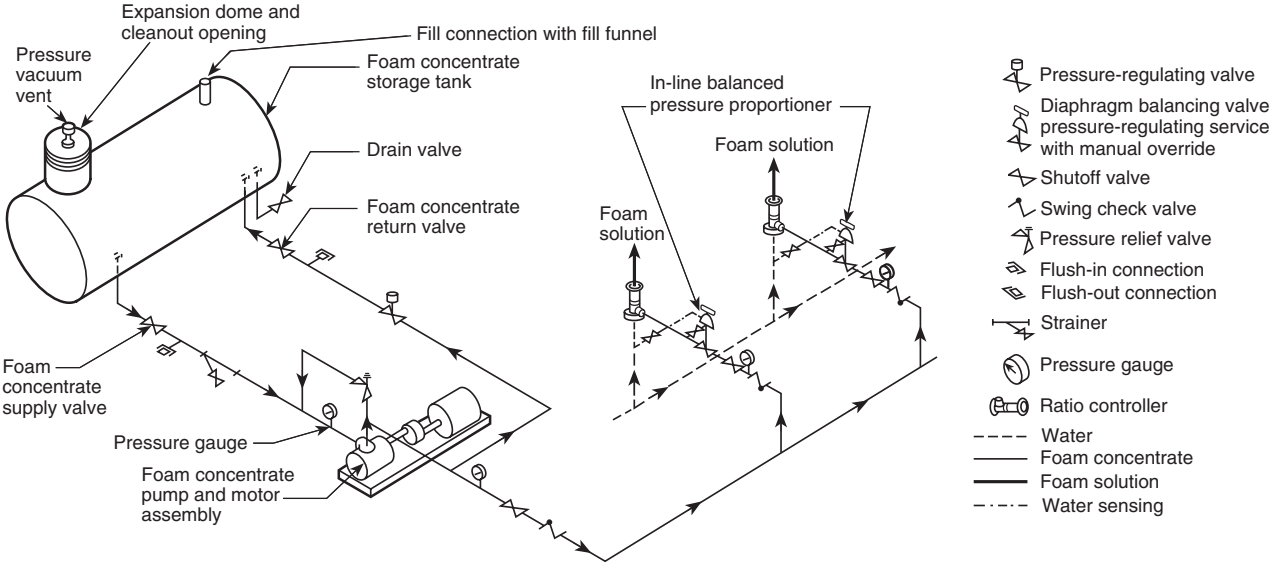


**FIGURE A.3.3.33.2 In-Line Balanced Pressure Proportioner.**

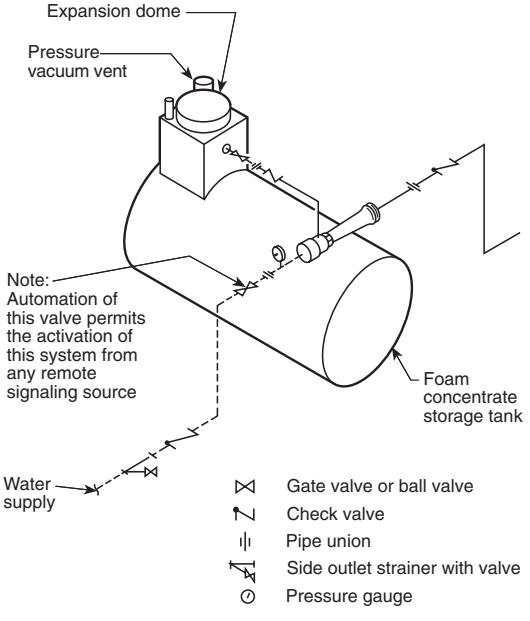


**FIGURE A.3.3.33.3 Line Proportioner.**

**A.3.3.47 Testing.** These tests follow up on the original acceptance test at intervals specified in the appropriate chapter of this standard.

**A.3.3.49 Valve Status Test Connection.** These connections can include the main drain, fire pump test header, backflow preventer forward flow test connection, fire hydrant, and other similar locations. In the absence of the aforementioned devices, an inspector's test connection might be used.

**A.3.3.50 Water Spray.** Water spray fixed systems are usually applied to special fire protection problems, since the protection can be specifically designed to provide for fire control, extinguishment, or exposure protection. Water spray fixed systems are permitted to be independent of, or supplementary to, other forms of protection.

**A.3.5.1 Control Valve.** Experience has shown that closed valves are the primary cause of failure of water-based fire protection systems in protected occupancies. Control valves do not include hose valves, inspector's test valves, drain valves, trim valves for dry pipe, preaction and deluge valves, check valves, or relief valves.

**A.3.5.2 Deluge Valve.** Each deluge valve is intended to be capable of automatic and manual operation.

Copyright 2015 National Fire Protection Association (NFPA). Licensed, by agreement, for individual use and download on October 23, 2015 to VETERANS AFFAIRS. No other reproduction or transmission in any form permitted without written permission of NFPA. For inquires or to report unauthorized use, contact licensing@nfpa.org.



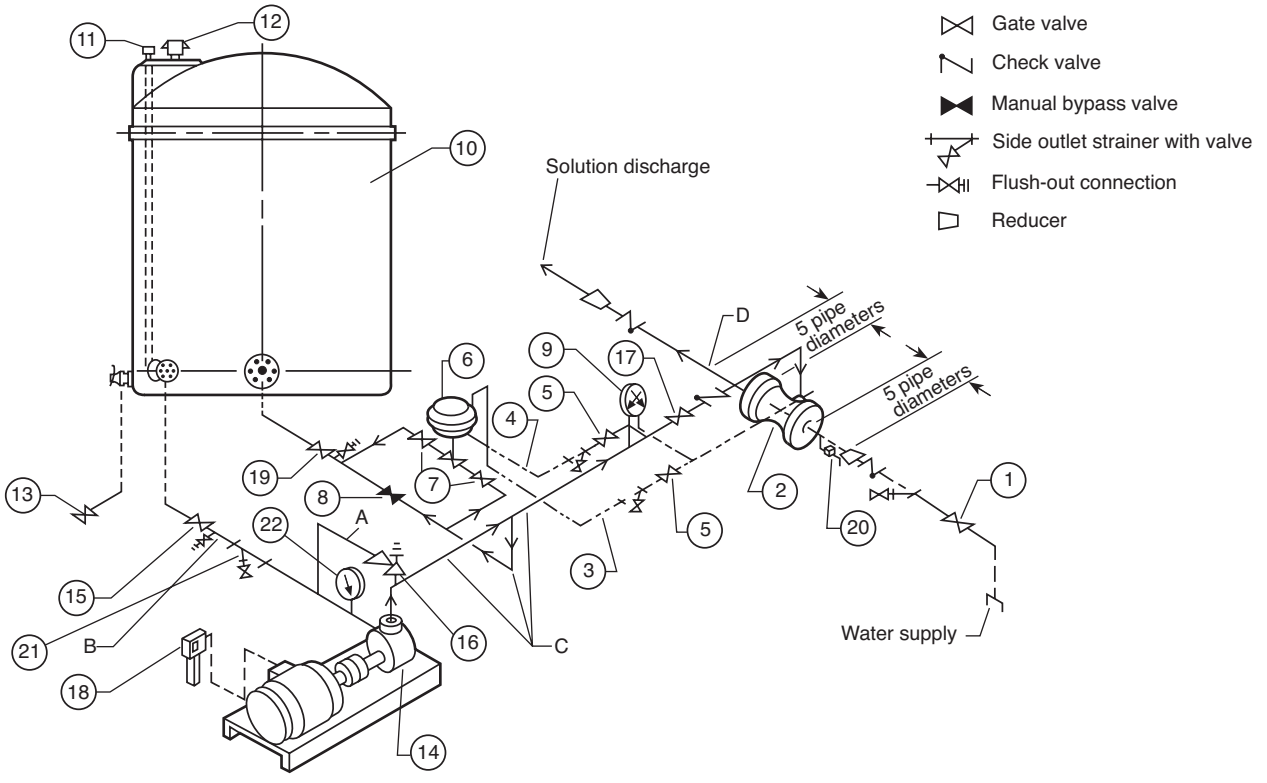


**Legend:**

1 Water supply valve (normally closed)
2 Ratio controller
3 Water balance line — minimum 3⁄16 in. (5 mm) I.D. pipe or tubing recommended
4 Concentrate balance line — minimum 3⁄16 in. (5 mm) I.D. pipe or tubing recommended
5 Sensing line valves (normally open)
6 Diaphragm control valve — automatic pressure balance — must be in vertical position
7 Block valves (normally open)
8 Manual bypass valve (normally open)
9 Water and concentrate pressure gauge (duplex)
10 Foam concentrate storage tank
11 Concentrate storage tank fill connection
12 Pressure vacuum vent
13 Concentrate storage tank drain valve (normally closed)
14 Foam concentrate pump and motor
15 Concentrate pump supply valve (normally open)
16 Pressure relief valve (setting as required by system)
17 Concentrate pump discharge valve (normally open)
18 Electric motor starter and switch
19 Concentrate return line valve (normally open)
20 Ball drip valve — ¾ in. (20 mm) (install in horizontal position)
21 Strainer with valved side outlet
22 Compound gauge

**Operation:**
Start concentrate pump (18). Open water supply valve (1). Open concentrate pump discharge valve (17). Equal gauge readings then maintained at (9) by the automatic valve (6). For manual operation, valves (7) can be closed and equal gauge readings maintained by regulating valve (8) manually.

**System Automation:**
By automating certain valves, the balanced pressure proportioning system can be activated from any remote signaling source.

- Water supply valve (1), normally closed, to be automatically operated;
- Concentrate pump discharge valve (17), normally closed, to be automatically operated;
- Electric motor starter switch (18) to be automatically operated.

**FIGURE A.3.3.33.4 Standard Balanced Pressure Proportioner.**

**A.3.5.5.1 Master Pressure-Reducing Valve.** Master pressure-reducing valves are typically found downstream of a fire pump's discharge.

**A.3.6.3 Private Fire Service Main.** See Figure A.3.6.3.

**A.3.6.4 Sprinkler System.** A sprinkler system is considered to have a single system riser control valve. The design and installation of water supply facilities such as gravity tanks, fire pumps, reservoirs, or pressure tanks are covered by NFPA 20, *Standard for the Installation of Stationary Pumps for Fire Protection,* and NFPA 22, *Standard for Water Tanks for Private Fire Protection.*

**A.3.6.4.6 Wet Pipe Sprinkler System.** Hose connections [1½ in. (40 mm) hose, valves, and nozzles] supplied by sprinkler system piping are considered components of the sprinkler system.

**A.3.6.6 Water Spray System.** Automatic systems can be actuated by separate detection equipment installed in the same area as the water spray nozzles or by the water spray nozzles using an operating element. In some cases, the automatic detector can also be located in another area. [**15:** A.3.3.21]

**A.3.7.1 Frequency.** The frequencies in NFPA 25 are intended to establish an optimal time between tasks that are required by

Copyright 2015 National Fire Protection Association (NFPA). Licensed, by agreement, for individual use and download on October 23, 2015 to VETERANS AFFAIRS. No other reproduction or transmission in any form permitted without written permission of NFPA. For inquires or to report unauthorized use, contact licensing@nfpa.org.



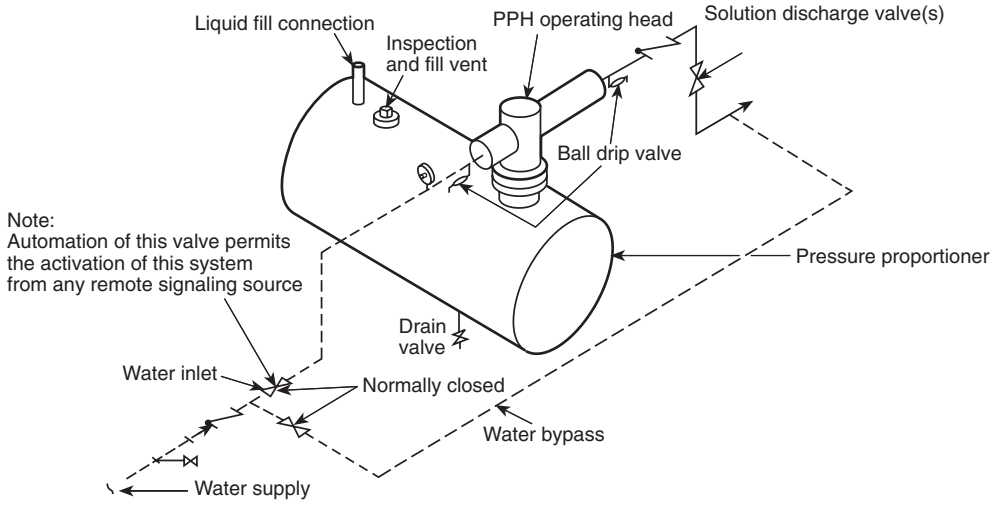


**FIGURE A.3.3.33.5 Standard Pressure Proportioner.**

this document. When scheduling conflicts or other conditions do not allow the tasks to be performed on a strict calendar schedule, it is important that the required task frequencies be identified and complied with according to the variances described in the frequency definitions. When the required task frequencies have not been followed, it should be noted on the inspection report, the task should be performed, and the task frequencies should be followed for all future tasks. The variances should not be used to "skip" tasks or to perform fewer tasks than called for in this document.

**A.4.1.1** Any portion or all of the inspection, testing, and maintenance can be permitted to be contracted with an inspection, testing, and maintenance service.

**A.4.1.1.1** In order to ensure compliance, the owner should verify that windows, skylights, doors, ventilators, other openings and closures, concealed spaces, unused attics, stair towers, roof houses, and low spaces under buildings do not expose water-filled piping to freezing. This should occur prior to the onset of cold weather and periodically thereafter.

**A.4.1.1.3** Examples of designated representatives can include the occupant, management firm, or managing individual through specific provisions in the lease, written use agreement, or management contract.

**A.4.1.2** Other means of freeze protection for water-filled piping including heated valve enclosures, heat tracing, insulation, antifreeze solutions, or other methods are allowed by the applicable installation standard. Installation standards require heat tracing protecting fire protection piping against freezing to be supervised.

**A.4.1.3** The components are not required to be open or exposed. Doors, removable panels, or valve pits can be permitted to satisfy the need for accessibility. Such equipment should not be obstructed by features such as walls, ducts, columns, direct burial, or stock storage.

**A.4.1.5** Recalled products should be replaced or remedied. Remedies include entrance into a program for scheduled replacement. Such replacement or remedial product should be installed in accordance with the manufacturer's instructions and the appropriate NFPA installation standards. A recalled product is a product subject to a statute or administrative regulation specifically requiring the manufacturer, importer, distributor, wholesaler, or retailer of a product, or any combination of such entities, to recall the product, or a product voluntarily recalled by a combination of such entities.

Needed corrections and repairs should be classified as an impairment, critical deficiency, or noncritical deficiency according to the effect on the fire protection system and the nature of the hazard protected.

Impairments are the highest priority problem found during inspection, testing, and maintenance and should be corrected as soon as possible. The fire protection system cannot provide an adequate response to a fire, and implementation of impairment procedures outlined in Chapter 15 is required until the impairment is corrected.

Critical deficiencies need to be corrected in a timely fashion. The fire protection system is still capable of performing, but its performance can be impacted and the implementation of impairment procedures might not be needed. However, special consideration must be given to the hazard in the determination of the classification. A deficiency that is critical for one hazard might be an impairment in another.

Noncritical deficiencies do not affect the performance of the fire protection system but should be corrected in a reasonable time period so that the system can be properly inspected, tested, and maintained.

Assembly occupancies, health care facilities, prisons, high-rise buildings, other occupancies where the life safety exposure is significant, or facilities that cannot be evacuated in a timely manner require special consideration. As an example, a nonfunctioning waterflow alarm might be considered a critical deficiency in a storage warehouse but an impairment in a hospital.

High hazard occupancies where early response to a fire is critical also require special consideration. A small number of painted sprinklers could be considered an impairment for a system protecting a high hazard occupancy but might be considered a critical deficiency in a metal working shop.

Classifications of needed corrections and repairs are shown in Table A.3.3.7.

Copyright 2015 National Fire Protection Association (NFPA). Licensed, by agreement, for individual use and download on October 23, 2015 to VETERANS AFFAIRS. No other reproduction or transmission in any form permitted without written permission of NFPA. For inquires or to report unauthorized use, contact licensing@nfpa.org.



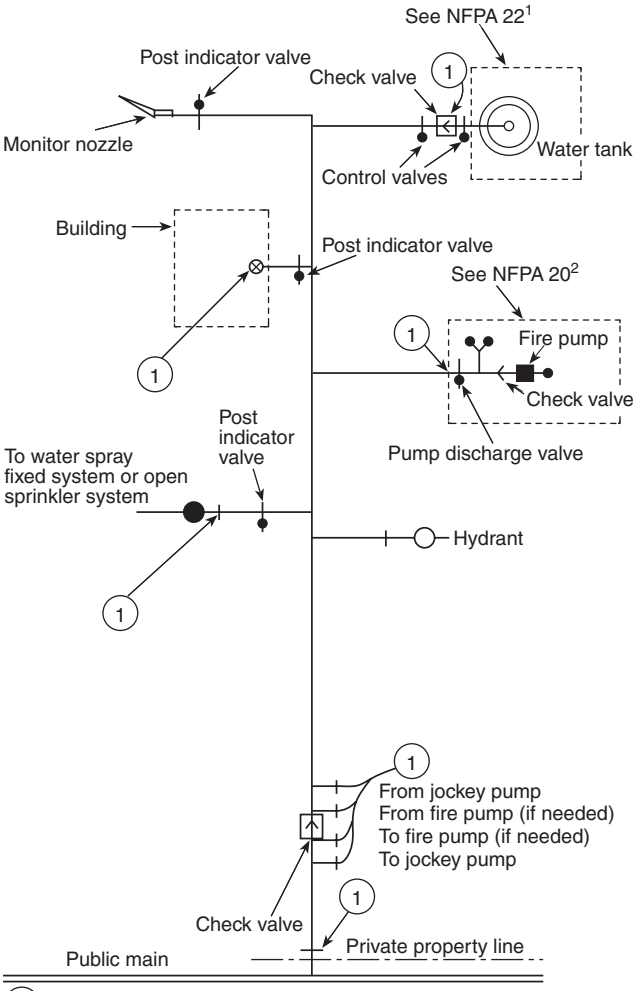


(1) End of private fire service main

Note: The piping (aboveground or buried) shown is specific as to the end of the private fire service main, and this schematic is only for illustrative purposes beyond the end of the fire service main. Details of valves and their location requirements are covered in the specific standard involved.

1. See NFPA 22, *Standard for Water Tanks for Private Fire Protection,* 2013.
2. See NFPA 20, *Standard for the Installation of Stationary Pumps for Fire Protection,* 2013.

**FIGURE A.3.6.3 Typical Private Fire Service Main. [24:Figure A.3.3.11]**

**A.4.1.5.1** System deficiencies not explained by normal wear and tear, such as hydraulic shock, can often be indicators of system problems and should be investigated and evaluated by a qualified person or engineer. Failure to address these issues could lead to catastrophic failure. Examples of deficiencies that can be caused by issues beyond normal wear and tear are as follows:

(1) Pressure gauge deficiencies as follows:
  (a) Gauge not returning to zero
  (b) Gauge off scale
  (c) Gauge with bent needle

(2) Support devices deficiencies as follows:
  (a) Bent hangers and/or rods
  (b) Hangers pulled out/off structure
  (c) Indication of pipe or hanger movement such as the following:
    i. Hanger scrape marks on pipe, exposed pipe surface where pipe and hangers are painted
    ii. Firestop material damaged at pipe penetration of fire-rated assembly

(3) Unexplained system damage as follows:
  (a) Unexplained system damage beyond normal wear and tear
  (b) Bent or broken shafts on valves
  (c) Bent or broken valve clappers
  (d) Unexplained leakage at branch lines, cross main, or feed main piping
  (e) Unexplained leakage at closed nipples
  (f) Loose bolts on flanges and couplings

(4) Fire pump deficiencies as follows:
  (a) Fire pump driver out of alignment
  (b) Vibration of fire pump and/or driver
  (c) Unusual sprinkler system piping noises (sharp report, loud bang)

**A.4.1.6** The inspections and tests specified in this standard do not address the adequacy of design criteria or the capability of the fire protection system to protect the building or its contents. It is assumed that the original system design and installation were appropriate for the occupancy and use of the building and were approved by all applicable authorities having jurisdiction. If no changes to the water supply or to the building or its use have transpired since it was originally occupied, no evaluation is required. If changes are contemplated, it is the owner's responsibility to arrange for the evaluation of the fire protection system(s). Where the inspections and tests specified in the standard have been contracted to a qualified inspection provider or contractor, it is not the role of the inspector or contractor to determine if any changes have been made or the subsequent evaluation of the fire protection system. The evaluation of any building changes should be conducted before any proposed change is incorporated and should utilize the appropriate installation standard and input from applicable authorities having jurisdiction.

Fire protection systems should not be removed from service when the building is not in use; however, where a system that has been out of service for a prolonged period (such as in the case of idle or vacant properties) is returned to service, it is recommended that a responsible and experienced contractor be retained to perform all inspections and tests.

**A.4.1.7** See Annex E for an example of a hazard evaluation form. A hazard evaluation is not part of a system inspection.

**A.4.3.1** Inspection reports used for system inspections should contain an "Owner's Section" as shown in Figure A.4.3.1 that the property owner or designated representative should complete. Typical records include, but are not limited to, valve inspections; flow, drain, and pump tests; and trip tests of dry pipe, deluge, and preaction valves.

Acceptance test records should be retained for the life of the system or its special components. Subsequent test records should be retained for a period of 1 year after the next test. The comparison determines deterioration of system performance or condition and the need for further testing or maintenance.

Copyright 2015 National Fire Protection Association (NFPA). Licensed, by agreement, for individual use and download on October 23, 2015 to VETERANS AFFAIRS. No other reproduction or transmission in any form permitted without written permission of NFPA. For inquires or to report unauthorized use, contact licensing@nfpa.org.



**Owner's Section**

A. Is the building occupied? ❑ Yes ❑ No

B. Has the occupancy and hazard of contents remained the same since the last inspection? ❑ Yes ❑ No

C. Are all fire protection systems in service? ❑ Yes ❑ No

D. Has the system remained in service without modification since the last inspection? ❑ Yes ❑ No

E. Was the system free of actuation of devices or alarms since the last inspection? ❑ Yes ❑ No

Explain any "no" answers:

_____

_____

_____

_____

_____

Owner or Designated Representative (print) Signature and Date

© 2013 National Fire Protection Association NFPA 25

**FIGURE A.4.3.1 Owner's Section on Inspection Report.**

**A.4.3.1.1** Computer programs that file inspection and test results should provide a means of comparing current and past results and should indicate the need for corrective maintenance or further testing.

**A.4.3.3** See Section B.2 for information regarding sample forms.

**A.4.5** Inspection and periodic testing determine what, if any, maintenance actions are required to maintain the operability of a water-based fire protection system. The standard establishes minimum inspection/testing frequencies, responsibilities, test routines, and reporting procedures but does not define precise limits of anomalies where maintenance actions are required.

Substandard conditions, such as a closed valve, subnormal water pressure, loss of building heat or power, or obstruction of sprinklers, nozzles, detectors, or hose stations, can delay or prevent system actuation and impede manual fire-fighting operations.

**A.4.6.4** The types of tests required for each protection system and its components, and the specialized equipment required for testing, are detailed in the appropriate chapter.

As referred to in 4.3.4, original records should include, at a minimum, the contractor's material and test certificate, "as-built" drawings and calculations, and any other required or pertinent test reports. These documents establish the conditions under which the systems were first installed and offer some insight to the design intent, installation standards used, and water supply present at the time of installation. Original records are instrumental in determining any subsequent changes or modifications to the buildings or system.

**A.4.6.5** Examples of subsystems or components include fire pumps, drivers or controllers, pressure-regulating devices, detection systems and controls, alarm check, and dry pipe, deluge, and preaction valves. The required tests for components are contained in the corresponding chapter in tables titled *Summary of [Component] Inspection, Testing, and Maintenance.*

**A.4.6.6** Some devices, such as waterflow alarms, can be tested automatically. Some things to consider include the following:

(1) Automatic tests should be arranged to test the same functions as the required tests.
(2) Components and arrangements of automated tests should be listed for the purpose and designed so that failure of the testing equipment should not impair the operation of the system unless indicated by a trouble or supervisory signal in accordance with *NFPA 72*.
(3) Failure of a component or system to pass an automatic test should result in an audible trouble signal in accordance with *NFPA 72*.
(4) Not all tests required by NFPA 25 can be suitable for automatic testing.
(5) Periodic visual inspection including the use of video should be performed.

**A.4.7** Section 4.7 provides the option to adopt a performance-based test and inspection method as an alternative means of compliance with 4.6.2. The prescriptive test and requirements contained in this standard are essentially qualitative. Equivalent or superior levels of performance can be demonstrated through quantitative performance-based analyses. This section provides a basis for implementing and monitoring a performance-based program acceptable under this option (providing approval is obtained by the authority having jurisdiction).

Copyright 2015 National Fire Protection Association (NFPA). Licensed, by agreement, for individual use and download on October 23, 2015 to VETERANS AFFAIRS. No other reproduction or transmission in any form permitted without written permission of NFPA. For inquires or to report unauthorized use, contact licensing@nfpa.org.



The concept of a performance-based testing and inspection program is to establish the requirements and frequencies at which inspection must be performed to demonstrate an acceptable level of operational reliability. The goal is to balance the inspection/test frequency with proven reliability of the system or component. The goal of a performance-based inspection program is also to adjust test/inspection frequencies commensurate with historical documented equipment performance and desired reliability. Frequencies of test/inspection under a performance-based program can be extended or reduced from the prescriptive test requirements contained in this standard when continued testing has been documented indicating a higher or lower degree of reliability compared to the authority having jurisdiction's expectations of performance. Additional program attributes that should be considered when adjusting test/inspection frequencies include the following:

(1) System/component preventive maintenance programs
(2) Consequences of system maloperation
(3) System/component repair history
(4) Building/service conditions

Fundamental to implementing a performance-based program is that adjusted test and inspection frequencies must be technically defensible to the authority having jurisdiction and supported by evidence of higher or lower reliability. Data collection and retention must be established so that the data utilized to alter frequencies are representative, statistically valid, and evaluated against firm criteria. Frequencies should not arbitrarily be extended or reduced without a suitable basis and rationale. It must be noted that transitioning to a performance-based program might require additional expenditures of resources in order to collect and analyze failure data, coordinate review efforts, replace program documents, and seek approval from the authority having jurisdiction. The following factors should be considered in determining whether a transition to a performance-based test program as permitted in Section 4.7 is appropriate:

(1) Past system/component reliability — have problems routinely been identified during the performance of the prescriptive test requirements of 4.6.2, or have systems consistently performed with minimal discrepancies noted?
(2) Do the recurring resource expenditures necessary to implement the prescriptive test requirements in 4.6.2 justify conducting the detailed analysis needed to support a performance-based testing program?
(3) Is the increased administrative burden of implementing, documenting, and monitoring a performance-based program worthwhile?

**Failure Rate Calculation.** A performance-based program requires that a maximum allowable failure rate be established and approved by the authority having jurisdiction in advance of implementation. The use of historical system/component fire system inspection records can be utilized to determine failure rates. One method of calculating the failure rate of a fire system is based on the following equation:

$$FSFR(t) = \frac{NF}{(NC)(t)}$$

where:

$FSFR(t)$ = fire system failure rate (failures per year)
$t$ = time interval of review in years
$NF$ = number of failures
$NC$ = total number of fire systems inspected or tested

**Example.** Data are collected for 50 fire pump weekly tests over a 5-year period. The testing is conducted, as described in 8.3.1. A review of the data has identified five failures:

Total components: 280

Data collection period: 5 years

Total failures: 5

$$FSFR = \frac{5}{280 \times 5} = 0.003/\text{year}$$

A fundamental requirement of a performance-based program is the continual monitoring of fire system/component failure rates and determining whether they exceed the maximum allowable failure rates as agreed upon with the authority having jurisdiction. The process used to complete this review should be documented and repeatable.

Coupled with this ongoing review is a requirement for a formalized method of increasing or decreasing the frequency of testing/inspection when systems exhibit either a higher than expected failure rate or an increase in reliability as a result of a decrease in failures, or both.

A formal process for reviewing the failure rates and increasing or decreasing the frequency of testing must be well documented. Concurrence of the authority having jurisdiction on the process used to determine test frequencies should be obtained in advance of any alterations to the test program. The frequency required for future tests might be reduced to the next inspection frequency and maintained there for a period equaling the initial data review or until the ongoing review indicates that the failure rate is no longer being exceeded — for example, going from annual to semiannual testing when the failure rate exceeds the authority having jurisdiction's expectations or from annual to every 18 months when the failure trend indicates an increase in reliability.

**References.**

Edward K. Budnick, P.E., "Automatic Sprinkler System Reliability," *Fire Protection Engineering*, Society of Fire Protection Engineers, Winter 2001.

*Fire Protection Equipment Surveillance Optimization and Maintenance Guide*, Electric Power Research Institute, July 2003.

William E. Koffel, P.E., *Reliability of Automatic Sprinkler Systems, Alliance for Fire Safety.*

*NFPA's Future in Performance Based Codes and Standards*, July 1995.

*NFPA Performance Based Codes and Standards Primer*, December 1999.

**A.4.8** Preventive maintenance includes, but is not limited to, lubricating control valve stems; adjusting packing glands on valves and pumps; bleeding moisture and condensation from air compressors, air lines, and dry pipe system auxiliary drains; and cleaning strainers. Frequency of maintenance is indicated in the appropriate chapter.

Corrective maintenance includes, but is not limited to, replacing loaded, corroded, or painted sprinklers; replacing missing or loose pipe hangers; cleaning clogged fire pump impellers; replacing valve seats and gaskets; restoring heat in areas subject to freezing temperatures where water-filled piping is installed; and replacing worn or missing fire hose or nozzles.

Emergency maintenance includes, but is not limited to, repairs due to piping failures caused by freezing or impact damage; repairs to broken underground fire mains; and replace-

Copyright 2015 National Fire Protection Association (NFPA). Licensed, by agreement, for individual use and download on October 23, 2015 to VETERANS AFFAIRS. No other reproduction or transmission in any form permitted without written permission of NFPA. For inquires or to report unauthorized use, contact licensing@nfpa.org.



ment of frozen or fused sprinklers, defective electric power, or alarm and detection system wiring.

**A.4.9.5** Most places using or storing hazardous materials have stations set up for employees where material safety data sheets (MSDSs) are stored. The inspector should be familiar with the types of materials present and the appropriate actions to take in an emergency.

**A.4.9.6** **WARNING:** NFPA 20, *Standard for the Installation of Stationary Pumps for Fire Protection*, includes electrical requirements that discourage the installation of a disconnect means in the power supply to electric motor-driven fire pumps. This is intended to ensure the availability of power to the fire pumps. Where equipment connected to those circuits is serviced or maintained, the service person could be subject to unusual exposure to electrical and other hazards. It could be necessary to establish special safe work practices and to use safeguards or personal protective clothing, or both. See also *NFPA 70E* for additional safety guidance.

**A.5.2** The provisions of the standard are intended to apply to routine inspections. In the event of a fire, a post-fire inspection should be made of all sprinklers within the fire area. In situations where the fire was quickly controlled or extinguished by one or two sprinklers, it might be necessary only to replace the activated sprinklers. Care should be taken that the replacement sprinklers are of the same make and model or that they have compatible performance characteristics (*see 5.4.1.2*). Soot-covered sprinklers should be replaced because deposits can result in corrosion of operating parts. In the event of a substantial fire, special consideration should be given to replacing the first ring of sprinklers surrounding the operated sprinklers because of the potential for excessive thermal exposure, which could weaken the response mechanisms.

**A.5.2.1.1** The conditions described in this section can have a detrimental effect on the performance of sprinklers by affecting water distribution patterns, insulating thermal elements, delaying operation, or otherwise rendering the sprinkler inoperable or ineffectual.

Severely loaded or corroded sprinklers should be rejected as part of the visual inspection. Such sprinklers could be affected in their distribution or other performance characteristics not addressed by routine sample testing. Lightly loaded or corroded sprinklers could be permitted for continued use if samples are selected for testing based on worst-case conditions and the samples successfully pass the tests.

**A.5.2.1.1.1** Sprinkler orientation includes the position of the deflector in relation to the ceiling slope. The deflector is generally required to be parallel to the slope of the ceiling. The inspection should identify any corrections made where deficiencies are noted, for example, pipe with welded outlets and flexible grooved couplings that have "rolled" out of position.

**A.5.2.1.1.2(2)** Corrosion found on the seat, or built up on the deflector that could affect the spray pattern, or a buildup on the operating elements that could affect the operation can have a detrimental effect on the performance of the sprinkler. Light surface corrosion on the boss, frame arms, and/or the deflector, and/or surface discoloration, not impacting the operation of the sprinkler should not warrant replacement. A degree of judgment should be exercised in the determination of the extent, location, and character of corrosion that would necessitate replacement.

**A.5.2.1.1.2(5)** In lieu of replacing sprinklers that are loaded with a coating of dust, it is permitted to clean sprinklers with compressed air or by a vacuum provided that the equipment does not touch the sprinkler.

**A.5.2.1.1.3** An example of a sprinkler needing replacement would be a pendent sprinkler installed in the upright position or vice versa.

**A.5.2.1.1.4** Examples include spaces above ceilings, whether the ceilings are lay-in tile or gypsum board, areas under theater stages, pipe chases, and other inaccessible areas, even if access panels or hatches are provided into the areas.

**A.5.2.1.2** NFPA 13, *Standard for the Installation of Sprinkler Systems*, in the storage definitions defines clearance as the distance from the top of storage to the ceiling sprinkler deflectors. Other obstruction rules are impractical to enforce under this standard. However, if obstructions that might cause a concern are present, the owner is advised to have an engineering evaluation performed.

**A.5.2.1.2.1** The 18 in. (457 mm) clearance rule generally applies to standard pendent, upright and sidewall spray sprinklers, extended coverage upright and pendent sprinklers, and residential sprinklers.

**A.5.2.1.2.3** The special sprinklers that the minimum 36 in. (915 mm) clearance rule generally applies to includes large drop sprinklers, CMSA sprinklers, and early suppression fast-response (ESFR) sprinklers.

**A.5.2.1.2.6** The purpose of maintaining a minimum clearance is to ensure water discharge is not obstructed. There are certain installations where this can be achieved by other means. Examples include library stacks, record storage, and where sprinklers are installed in aisles in between storage shelving. Clearance is also not needed for shelving along perimeter walls since this does not cause an obstruction. NFPA 13 allows a clearance less than 18 in. (457 mm) where full-scale fire tests demonstrate an acceptable sprinkler discharge pattern. Also, where sufficient shielding of the sprinkler spray pattern has resulted in an increase in the hazard classification to Extra Hazard Group 2, a clearance less than 18 in. (457 mm) might be acceptable.

**A.5.2.1.3** Sprinkler spray patterns should not be obstructed by temporary or nonpermanent obstructions such as signs, banners, or decorations. While it is impractical for an inspector to know all of the various obstruction rules for all the different types of sprinklers, the inspector can observe when temporary or nonpermanent obstructions have been installed that could block or obstruct a sprinkler's spray pattern. Temporary or nonpermanent obstructions that appear to be obstructions to sprinkler spray patterns should be removed or repositioned so they are not an obstruction.

**A.5.2.2** The conditions described in 5.2.2 can have a detrimental effect on the performance and life of pipe by affecting corrosion rates or pipe integrity or otherwise rendering the pipe ineffectual.

**A.5.2.2.1** Surface corrosion not impacting the integrity of the piping strength or raising concern of potential leakage should not warrant the replacement of piping. A degree of judgment should be exercised in the determination of the extent of corrosion that would necessitate replacement.

**A.5.2.2.3** Examples include some floor/ceiling or roof/ceiling assemblies, areas under theater stages, pipe chases, and other inaccessible areas.

Copyright 2015 National Fire Protection Association (NFPA). Licensed, by agreement, for individual use and download on October 23, 2015 to VETERANS AFFAIRS. No other reproduction or transmission in any form permitted without written permission of NFPA. For inquires or to report unauthorized use, contact licensing@nfpa.org.



**A.5.2.3** The conditions described in this section can have a detrimental effect on the performance of hangers and braces by allowing failures if the components become loose.

**A.5.2.3.3** Examples of hangers and seismic braces installed in concealed areas include some floor/ceiling or roof/ceiling assemblies, areas under theater stages, pipe chases, and other inaccessible areas.

**A.5.2.4.1** Due to the high probability of a buildup of excess pressure, gridded wet pipe systems should be provided with a relief valve not less than ¼ in. (6.3 mm) in accordance with NFPA 13, *Standard for the Installation of Sprinkler Systems.*

It is normal, though, that the pressure above the alarm or system check valve is typically higher than that of the water supply as a result of trapped pressure surges.

**A.5.2.4.4** See Figure A.5.2.4.4.

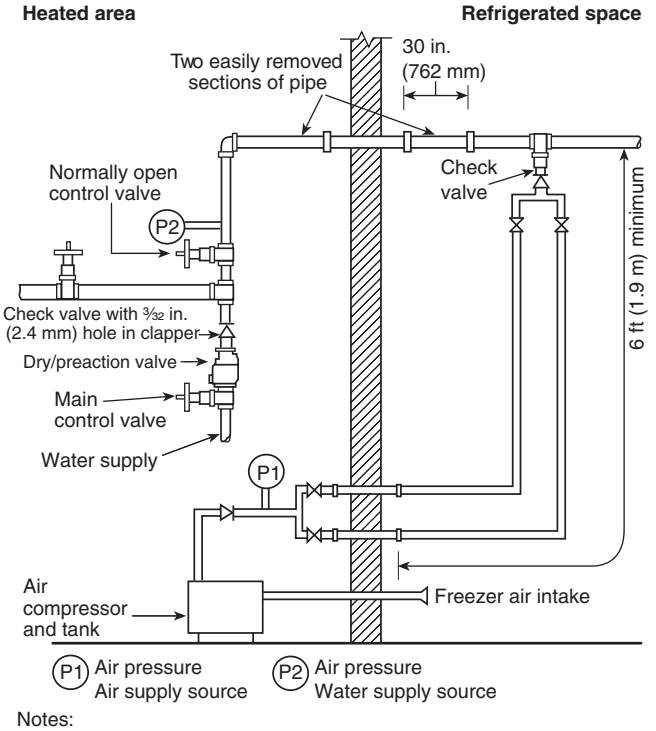


Notes:
1. Check valve with 3/32 in. (2.4 mm) hole in clapper not required if prime water not used.
2. Supply air to be connection to top or side of system pipe.
3. Each removable air line should be a minimum of 1 in. (25 mm) diameter and minimum of 6 ft (1.9 m) long.

**FIGURE A.5.2.4.4 Refrigerator Area Sprinkler System Used to Minimize Chances of Developing Ice Plugs.**

**A.5.2.6** The hydraulic design information sign should be secured to the riser with durable wire, chain, or equivalent. *(See Figure A.5.2.6.)*

**A.5.2.9** The information sign should be secured with wire, chain, or equivalent to each system control valve, antifreeze loop, and auxiliary system control valve indicating the information required by 4.1.9.

**A.5.3.1** The sprinkler field service testing described in this section is considered routine testing. Nonroutine testing should be conducted to address unusual conditions not associated with the routine test cycles mandated within this standard. Due to the nature of nonroutine testing, specific tests cannot be identified in this standard. The type of tests to be conducted and the number and location of samples to be submitted should be appropriate to the problem discovered or being investigated and based on consultation with the manufacturer, listing agency, and the authority having jurisdiction.

This system as shown on _____ company
print no. _____ dated _____
for _____
at _____ contract no. _____
is designed to discharge at a rate of _____
gpm per ft$^2$ (L/min per m$^2$) of floor area over a maximum
area of _____ ft$^2$ (m$^2$) when supplied
with water at a rate of _____ gpm (L/min)
at _____ psi (bar) at the base of the riser.
Hose stream allowance of _____
gpm (L/min) is included in the above.

**FIGURE A.5.2.6 Sample Hydraulic Design Information Sign.**

Where documentation of the installation date is not available, the start date for the in-service interval should be based upon the sprinkler's manufacture date.

**A.5.3.1.1** Sprinklers should be first given a visual inspection for signs of mechanical damage, cleaning, painting, leakage in service, or severe loading or corrosion, all of which are considered causes for immediate replacement. Devices that have passed the visual inspection should then be laboratory tested for sensitivity and functionality. The waterway should clear when sensitivity/functionality tested at 5 psi (0.4 bar) or the minimum listed operating pressure for dry sprinklers.

Thermal sensitivity should be not less than that permitted in post-corrosion testing of new sprinklers of the same type.

Sprinklers that have been in service for a number of years should not be expected to have all of the performance qualities of a new sprinkler. However, if there is any question about their continued satisfactory performance, the sprinklers should be replaced.

See Figure A.5.3.1.1.

**A.5.3.1.1.1.3** Sprinklers defined as fast response have a thermal element with an RTI of 50 (meters-seconds)$^{1/2}$ or less. A quick-response sprinkler, residential sprinkler, and early suppression fast-response (ESFR) sprinklers are examples of fast-response sprinklers.

**A.5.3.1.1.1.4** Due to solder migration caused by the high temperatures to which these devices are exposed, it is important to test them every 5 years. Because of this phenomenon, the operating temperature can vary over a wide range.

Copyright 2015 National Fire Protection Association (NFPA). Licensed, by agreement, for individual use and download on October 23, 2015 to VETERANS AFFAIRS. No other reproduction or transmission in any form permitted without written permission of NFPA. For inquires or to report unauthorized use, contact licensing@nfpa.org.

**FIGURE A.5.3.1.1 Sprinkler Operating Element Identification.**

**A.5.3.1.1.1.6** See 3.3.40.4.

**A.5.3.1.1.2** Examples of these environments are paper mills, packing houses, tanneries, alkali plants, organic fertilizer plants, foundries, forge shops, fumigation areas, pickle and vinegar works, stables, storage battery rooms, electroplating rooms, galvanizing rooms, steam rooms of all descriptions including moist vapor dry kilns, salt storage rooms, locomotive sheds or houses, driveways, areas exposed to outside weather, around bleaching equipment in flour mills, all portions of cold storage areas, and portions of any area where corrosive vapors prevail. Harsh water environments include water supplies that are chemically reactive.

**A.5.3.1.2** Within an environment, similar sidewall, upright, and pendent sprinklers produced by the same manufacturer could be considered part of the same sample, but additional sprinklers would be included within the sample if produced by a different manufacturer.

**A.5.3.2** The normal life expectancy of a gauge is between 10 and 15 years. A gauge can be permitted to have a reading with an error of ±3 percent of the maximum (full-scale) gauge reading. For example, a gauge having 200 psi (13.8 bar) maximum radius installed on a system with 60 psi (4.1 bar) normal pressure can be permitted if the gauge reads from 54 psi to 66 psi (3.7 bar to 4.5 bar).

**A.5.3.3.2** Data concerning reliability of electrical waterflow switches indicate no appreciable change in failure rates for those tested quarterly and those tested semiannually. Mechanical motor gongs, however, have additional mechanical and environmental failure modes and need to be tested more often.

**A.5.3.3.5** Opening the inspector's test connection can cause the system to trip accidentally.

**A.5.3.4** Sampling from the top and bottom of the system helps to determine if the solution has settled. Antifreeze solutions are heavier than water. If the antifreeze compound is separating from the water due to poor mixing, it will exhibit a higher concentration in the lower portion of the system than in the upper portion of the system. If the concentration is acceptable near the top, but too low near the water connection, it might mean that the system is becoming diluted near the water supply. If the concentration is either too high or too low in both the samples, it might mean that the wrong concentration was added to the system.

Two or three times during the freezing season, test samples can be drawn from test valve B as shown in Figure 7.6.2.1(1) of NFPA 13, especially if the water portion of the system has been drained for maintenance or repairs. A small hydrometer can be used so that a small sample is sufficient. Where water appears at valve B, or where the sample indicates that the solution has become weakened, the entire system should be emptied and refilled with acceptable solution as previously described.

See Figure A.5.3.4 for expected minimum air temperatures in 48 of the United States and parts of Canada where the lowest one-day mean temperature can be used as one method of determining the minimum reasonable air temperature. In situations where the piping containing the antifreeze solution is protected in some way from exposure to the outside air, higher minimum temperatures can be anticipated.

Where systems are drained in order to be refilled, it is not typically necessary to drain drops. Most systems with drops have insufficient volume to cause a problem, even if slightly higher concentration solutions collect in the drops. For drops in excess of 36 in. (915 mm), consideration should be given to draining drops if there is evidence that unacceptably high concentrations of antifreeze have collected in these long drops.

When emptying and refilling antifreeze solutions, every attempt should be made to recycle the old solution with the antifreeze manufacturer rather than discard it.

**A.5.3.4.1.1** Where inspecting antifreeze systems employing listed CPVC piping, the solution should be verified to be glycerine based.

**A.5.3.4.2.1** All antifreeze systems installed after September 30, 2012, are assumed to meet the minimum requirements of NFPA 13, 2013 edition. For systems installed after September 30, 2012, that do not meet the requirements of the 2013 edition of NFPA 13, consideration should be given to applying 5.3.4.2.1.

**A.5.3.4.2.1(1)** The use of factory premixed solutions is required because solutions that are not mixed properly have a possibility of separating from the water, allowing the pure concentrate (which is heavier than water) to drop out of solution and collect in drops or low points of the system. Such concentrations are combustible and could present problems during fires. The properties of glycerine are shown in Table A.5.3.4.2.1(1).

**A.5.3.4.2.1(3)** Antifreeze solutions with a maximum concentration of 38 percent glycerine or 30 percent propylene glycol do not require a deterministic hazard analysis. The risk assessment should be prepared by individual(s) who can demonstrate an ability to prepare a risk assessment by education and experience and who can demonstrate an understanding of the issues associated with antifreeze sprinkler systems, including the available related fire tests. For additional information regarding the risk assessment process, documentation to be submitted, and the AHJ's role, refer to NFPA 551, *Guide for the*

Copyright 2015 National Fire Protection Association (NFPA). Licensed, by agreement, for individual use and download on October 23, 2015 to VETERANS AFFAIRS. No other reproduction or transmission in any form permitted without written permission of NFPA. For inquires or to report unauthorized use, contact licensing@nfpa.org.



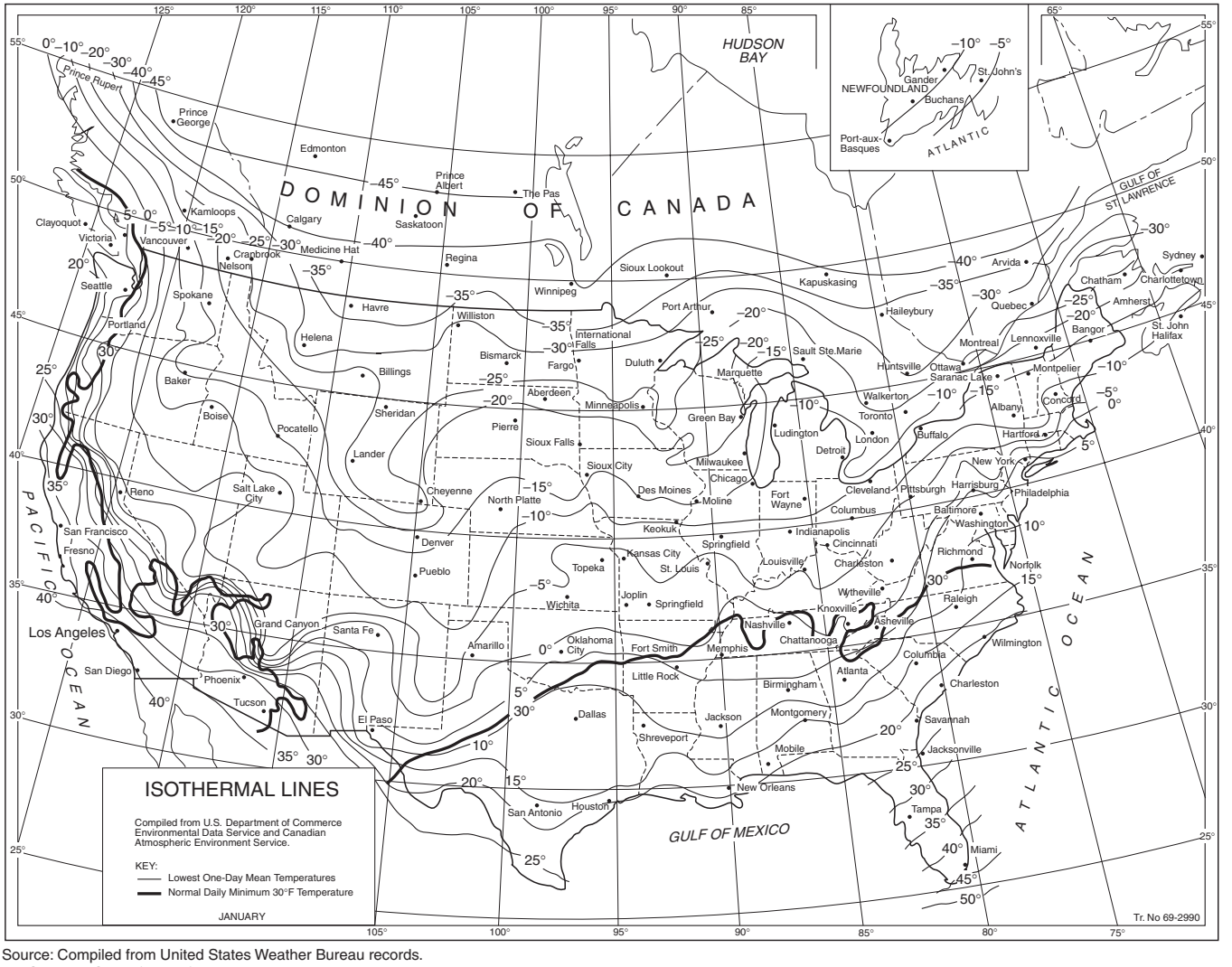


Source: Compiled from United States Weather Bureau records.
For SI units, °C = ⅝ (°F −32); 1 mi = 1.609 km.

**FIGURE A.5.3.4 Isothermal Lines — Lowest One-Day Mean Temperature (°F). [24:Figure A.10.5.1]**

*Evaluation of Fire Risk Assessments*, and the SFPE *Engineering Guide: Fire Risk Assessment*.

Propylene glycol and glycerine antifreeze solutions discharged from sprinklers have the potential to ignite under certain conditions. Research testing has indicated that several variables may influence the potential for large-scale ignition of the antifreeze solution discharged from a sprinkler. These variables include, but are not limited to, the concentration of antifreeze solution, sprinkler discharge characteristics, inlet pressure at the sprinkler, ceiling height, and size of fire at the time of sprinkler discharge. All relevant data and information should be carefully reviewed and considered in the deterministic risk assessment. As appropriate, the risk assessment should consider factors such as the following:

(1) Occupancy use group per NFPA 13
(2) Ceiling height
(3) Antifreeze solution concentration and type
(4) Maximum system pressure (normal static pressures)
(5) Sprinkler type, including K-factor
(6) Potential and actual fuel load (Christmas trees)
(7) Type of structure (construction types)
(8) Size of structure
(9) Ability of the sprinkler system to control the fire
(10) Occupied spaces versus unoccupied spaces such as trash enclosures and dust collectors as follows:
    (a) Adjacent occupancies (spaces adjacent to the area protected by antifreeze systems)
    (b) Separation between areas protected with an antifreeze system and other areas
    (c) Ventilation of areas protected with an antifreeze system to prevent damage to adjacent areas
    (d) Duration of antifreeze discharge

Tests summarized in Table A.5.3.4.2.1(3) show that large-scale ignition of the sprinkler spray did not occur in tests with 50 percent glycerine and 40 percent propylene glycol antifreeze solutions discharging onto a fire having a nominal heat release rate (HRR) of 1.4 MW. A deterministic risk assessment that demonstrates that the heat release rate for reasonably credible fire scenarios will be less than 1.4 MW at the time of sprinkler activation should be acceptable. The risk assessment

Copyright 2015 National Fire Protection Association (NFPA). Licensed, by agreement, for individual use and download on October 23, 2015 to VETERANS AFFAIRS. No other reproduction or transmission in any form permitted without written permission of NFPA. For inquires or to report unauthorized use, contact licensing@nfpa.org.



**Table A.5.3.4.2.1(1) Properties of Glycerine and Propylene Glycol**

| Material | Solution (% by Volume) | Specific Gravity at 77°F (25°C) | Freezing Point °F | Freezing Point °C |
|---|---|---|---|---|
| Glycerine (C.P. or U.S.P. grade) | 0 | 1.000 | 32 | 0 |
| | 5 | 1.014 | 31 | –0.5 |
| | 10 | 1.029 | 28 | –2.2 |
| | 15 | 1.043 | 25 | –3.9 |
| | 20 | 1.059 | 20 | –6.7 |
| | 25 | 1.071 | 16 | –8.9 |
| | 30 | 1.087 | 10 | –12 |
| | 35 | 1.100 | 4 | –15.5 |
| | 40 | 1.114 | –2 | –19 |
| | 45 | 1.130 | –11 | –24 |
| | 50 | 1.141 | –19 | –28 |
| Propylene glycol | 0 | 1.000 | 32 | 0 |
| | 5 | 1.004 | 26 | –3 |
| | 10 | 1.008 | 25 | –4 |
| | 15 | 1.012 | 22 | –6 |
| | 20 | 1.016 | 19 | –7 |
| | 25 | 1.020 | 15 | –10 |
| | 30 | 1.024 | 11 | –12 |
| | 35 | 1.028 | 2 | –17 |
| | 40 | 1.032 | –6 | –21 |

should also address issues associated with management of change, such as change in occupancy and temporary fuel loads. A natural Christmas tree can result in an HRR well above 1.4 MW at the time of sprinkler activation. In addition to the variables identified previously, the deterministic risk assessment should include occupancy, quantity of solution, impact on life safety, and potential increase in heat release rate.

The following is a list of research reports that have been issued by the Fire Protection Research Foundation (FPRF) related to the use of antifreeze in sprinkler systems that should be considered in the development of the deterministic risk assessment:

(1) *Antifreeze Systems in Home Fire Sprinkler Systems — Literature Review and Research Plan*, Fire Protection Research Foundation, June 2010.
(2) *Antifreeze Systems in Home Fire Sprinkler Systems — Phase II Final Report*, Fire Protection Research Foundation, December 2010.
(3) *Antifreeze Solutions Supplied through Spray Sprinklers — Interim Report*, Fire Protection Research Foundation, February 2012.

Table A.5.3.4.2.1(3) provides an overview of the testing conducted by the FPRF.

**A.5.4.1.2** To help in the replacement of like sprinklers, unique sprinkler identification numbers (SINs) are provided on all sprinklers manufactured after January 1, 2001. The SIN accounts for differences in orifice size, deflector characteristics, pressure rating, and thermal sensitivity.

**A.5.4.1.2.1** Old-style sprinklers are permitted to replace existing old-style sprinklers. Old-style sprinklers should not be used to replace standard sprinklers without a complete engineering review of the system. The old-style sprinkler is the type manufactured before 1953. It discharges approximately 40 percent of the water upward to the ceiling, and it can be installed in either the upright or pendent position.

**A.5.4.1.4** It is imperative that any replacement sprinkler have the same characteristics as the sprinkler being replaced. If the same temperature range, response characteristics, spacing requirements, flow rates, and K-factors cannot be obtained, a sprinkler with similar characteristics should be used, and the system should be evaluated to verify the sprinkler is appropriate for the intended use. With regard to response characteristics, matching identical response time index (RTI) and conductivity factors are not necessary unless special design considerations are given for those specific values.

**A.5.4.1.5** A minimum of two sprinklers of each type and temperature rating installed should be provided.

**A.5.4.1.5.5** One sprinkler wrench design can be appropriate for many types of sprinklers, and multiple wrenches of the same design should not be required.

**A.5.4.1.5.6.1** The minimum information in the list contained in the spare sprinkler cabinet should be marked with the following:

(1) General description of the sprinkler, including upright, pendent, residential, ESFR, and so forth
(2) Quantity of sprinklers to be maintained in the spare sprinkler cabinet

An example of the list is shown in Figure A.5.4.1.5.6.1.

**A.5.4.1.6** Corrosion-resistant or specially coated sprinklers should be installed in locations where chemicals, moisture, or other corrosive vapors exist.

Copyright 2015 National Fire Protection Association (NFPA). Licensed, by agreement, for individual use and download on October 23, 2015 to VETERANS AFFAIRS. No other reproduction or transmission in any form permitted without written permission of NFPA. For inquires or to report unauthorized use, contact licensing@nfpa.org.



**Table A.5.3.4.2.1(3) FPRF Testing Summary**

| Topic | Information |
|---|---|
| Scope of sprinklers tested | The following sprinklers were used during the residential sprinkler research program described in the report dated December 2010:<br>(1) Residential pendent style having nominal K-factors of 3.1, 4.9, and 7.4 gpm/psi$^{1/2}$<br>(2) Residential concealed pendent style having a nominal K-factor of 4.9 gpm/psi$^{1/2}$<br>(3) Residential sidewall style having nominal K-factors of 4.2 and 5.5 gpm/psi$^{1/2}$<br>The following sprinklers were used during the spray sprinkler research program described in the report dated February 2012:<br>(1) Residential pendent style having a nominal K-factor of 3.1 gpm/psi$^{1/2}$<br>(2) Standard spray pendent style having nominal K-factors of 2.8, 4.2, 5.6, and 8.0 gpm/psi$^{1/2}$<br>(3) Standard spray concealed pendent style having a nominal K-factor of 5.6 gpm/psi$^{1/2}$<br>(4) Standard spray upright style having a nominal K-factor of 5.6 gpm/psi$^{1/2}$<br>(5) Standard spray extended coverage pendent style having a nominal K-factor of 5.6 gpm/psi$^{1/2}$ |
| Antifreeze solution concentration | <50% glycerine and <40% propylene glycol antifreeze solutions — solutions were not tested.<br>50% glycerine and 40% propylene glycol antifreeze solutions — large-scale ignition of the sprinkler spray did not occur in tests with sprinkler discharge onto a fire having a nominal heat release rate (HRR) of 1.4 MW. Large-scale ignition of the sprinkler spray occurred in multiple tests with sprinkler discharge onto a fire having a nominal HRR of 3.0 MW.<br>55% glycerine and 45% propylene glycol antifreeze solutions — large-scale ignition of the sprinkler spray occurred in tests with sprinkler discharge onto a fire having a nominal HRR of 1.4 MW.<br>>55% glycerine and >45% propylene glycol antifreeze solutions — large-scale ignition of the sprinkler spray occurred in tests with sprinkler discharge onto a fire having an HRR of less than 500 kW.<br>70% glycerine and 60% propylene glycol antifreeze solutions — maximum antifreeze solution concentrations tested. |
| Sprinkler inlet pressure | Large-scale ignition of the sprinkler discharge spray was not observed when the sprinkler inlet pressure was 50 psi or less for tests using 50% glycerine or 40% propylene glycol. |
| Ceiling height | When discharging 50% glycerine and 40% propylene glycol antifreeze solutions onto fires having an HRR of 1.4 MW, no large-scale ignition of the sprinkler spray was observed with ceiling heights up to 20 ft.<br>When discharging 50% glycerine and 40% propylene glycol antifreeze solutions onto fires having an HRR of 3.0 MW, large-scale ignition of the sprinkler spray was observed at a ceiling height of 20 ft. |
| Fire control | The test results described in the test reports of December 2010 and February 2012 indicated that discharging glycerine and propylene glycol antifreeze solutions onto a fire can temporarily increase the fire size until water is discharged.<br>As a part of the residential sprinkler research described in report dated December 2010, tests were conducted to evaluate the effectiveness of residential sprinklers to control fires involving furniture and simulated furniture. The results of these tests indicated that 50% glycerine and 40% propylene glycol antifreeze solutions demonstrated the ability to control the furniture-type fires in a manner similar to water.<br>For standard spray–type sprinklers, no tests were conducted to investigate the ability of these sprinklers to control the types and sizes of fires that these sprinklers are intended to protect. |

Copyright 2015 National Fire Protection Association (NFPA). Licensed, by agreement, for individual use and download on October 23, 2015 to VETERANS AFFAIRS. No other reproduction or transmission in any form permitted without written permission of NFPA. For inquires or to report unauthorized use, contact licensing@nfpa.org.



**Sprinklers Contained in this Cabinet**

| Sprinkler Identification, SIN | General Description | Temperature Rating, °F | Sprinkler Quantity Maintained |
|---|---|---|---|
| TY9128 | Extended Coverage, K-25, upright | 155 | 6 |
| VK425 | Concealed pendent residential | 145 | 6 |

Issued: 10/3/05 Revised:

**FIGURE A.5.4.1.5.6.1 Sample List. [13:Figure A.6.2.9.7.1]**

**A.5.4.1.8.1** Typical sandwich bags purchased in a grocery store are generally plastic, not cellophane. Plastic bags have a tendency to shrink and adhere to the sprinkler prior to sprinkler activation, creating the potential for disruption of sprinkler spray patterns. Bags placed over sprinklers need to be true cellophane or paper.

**A.5.4.2** Conversion of dry pipe systems to wet pipe systems on a seasonal basis causes corrosion and accumulation of foreign matter in the pipe system and loss of alarm service.

**A.5.4.3** Certain sprinkler systems, such as those installed aboard ships, are maintained under pressure by a small freshwater supply but are supplied by a raw water source following system activation. In these systems, the effects of raw water are minimized by draining and refilling with freshwater. For systems on ships, flushing within 45 days or the vessel's next port of call, whichever is longer, is considered acceptable.

**A.6.2.3** The design information sign should be secured with durable wire, chain, or equivalent to the water supply control valve for automatic or semiautomatic standpipe systems and at an approved location for manual systems. See Figure A.6.2.3 for sample hydraulic information sign.

Location of the two hydraulically most remote hose connections: _____

Design flow rate for the connections identified above: _____

Design residual inlet and outlet pressures for the connections identified above: _____

Design static pressure and design system demand (i.e., flow and residual pressure) at the system control valve, or at the pump discharge flange where a pump is installed, and at each fire department connection: _____

**FIGURE A.6.2.3 Sample Hydraulic Sign. [14:Figure A.6.8]**

**A.6.3.1.1** The hydraulically most remote hose connections in a building are generally at a roof manifold, if provided, or at the top of a stair leading to the roof. In a multizone system, the testing means is generally at a test header at grade or at a suction tank on higher floors.

**A.6.3.1.2** When the standpipe system was accepted, NFPA 14 required that each additional standpipe be flowed to simulate the hydraulic calculations. Typically, the lowest hose valve was used to create this simultaneous flow so hoses wouldn't have to be run all the way down each standpipe.

**A.6.3.1.2.1** Since the pressures at each standpipe aren't required to be balanced by NFPA 14 or this standard, any hose valve on the standpipe can be flowed to achieve the additional 250 gpm (950 L/min) needed. It might be more convenient to use a hose valve on an upper level rather than the lowest one on the standpipe.

**A.6.3.1.2.2** In some instances it isn't reasonable to attach a hose to a standpipe to provide this additional flow point. The authority having jurisdiction can allow the additional flow be made at other outlets on the standpipe system, such as from another standpipe, or from the fire pump test header. Although the results of having the flow points somewhere else in the standpipe system won't match the hydraulic calculations, the test will still prove that the most remote standpipe can provide the necessary flow and pressure required for fire department use while simultaneously flowing the full system demand.

**A.6.3.2.1** The intent of 6.3.2.1 is to ascertain whether the system retains its integrity under fire conditions. Minimum leakage existing only under test pressure is not cause for repair.

**A.6.3.4** The normal life expectancy of a gauge is between 10 and 15 years. A gauge can be permitted to have a reading with an error of ±3 percent of the maximum (full-scale) gauge reading. For example, a gauge having 200 psi (13.8 bar) maximum radius installed on a system with 60 psi (4.1 bar) normal pressure can be permitted if the gauge reads from 54 psi to 66 psi (3.7 bar to 4.5 bar).

**A.7.2.2** The requirements in 7.2.2 outline inspection intervals, conditions to be inspected, and corrective actions necessary for private fire service mains and associated equipment.

**A.7.2.2.2** Generally, underground piping cannot be inspected on a routine basis. However, flow testing can reveal the condition of underground piping and should be conducted in accordance with Section 7.3.

**A.7.2.2.3** Any flow in excess of the flow through the main drain connection should be considered significant.

**A.7.3.1** Full flow tests of underground piping can be accomplished by methods including, but not limited to, flow through yard hydrants, fire department connections once the check valve has been removed, main drain connections, and hose connections. The flow test should be conducted in accordance with NFPA 291.

**A.7.4.2.2** The intent of 7.4.2.2 is to maintain adequate space for use of hydrants during a fire emergency. The amount of space needed depends on the configuration as well as the type and size of accessory equipment, such as hose, wrenches, and other devices that could be used.

**A.7.5.3** Private fire service mains might not include a main drain connection; therefore, other equivalent means of flow such as an installed fire hydrant can be used.

**A.8.1** A fire pump assembly provides waterflow and pressure for private fire protection. The assembly includes the water supply suction and discharge piping and valving; pump; electric, diesel, or steam turbine driver and control; and the auxiliary equipment appurtenant thereto.

Copyright 2015 National Fire Protection Association (NFPA). Licensed, by agreement, for individual use and download on October 23, 2015 to VETERANS AFFAIRS. No other reproduction or transmission in any form permitted without written permission of NFPA. For inquires or to report unauthorized use, contact licensing@nfpa.org.



**A.8.1.5** Types of centrifugal fire pumps include single and multistage units of horizontal or vertical shaft design. Listed fire pumps have rated capacities of 25 gpm to 5000 gpm (95 L/min to 18,925 L/min), with a net pressure range from approximately 40 psi to 400 psi (2.75 bar to 27.6 bar).

(1) *Horizontal Split Case.* This pump has a double suction impeller with an inboard and outboard bearing and is used with a positive suction supply. A variation of this design can be mounted with the shaft in a vertical plane. *[See Figure A.8.1.5(a).]*
(2) *End Suction and Vertical In-Line.* This pump can have either a horizontal or vertical shaft with a single suction impeller and a single bearing at the drive end. *[See Figure A.8.1.5(b).]*
(3) *Vertical Shaft, Turbine Type.* This pump has multiple impellers and is suspended from the pump head by a column pipe that also serves as a support for the shaft and bearings. This pump is necessary where a suction lift is needed, such as from an underground reservoir, well, river, or lake. *[See Figure A.8.1.5(c).]*

**A.8.1.9** Controllers include air-, hydraulic-, or electric-operated units. These units can take power from the energy source for their operation, or the power can be obtained elsewhere. Controllers used with electric power sources can apply the source to the driver in one (across-the-line) or two (reduced voltage or current) steps. Controllers can be used with automatic and manual transfer switches to select the available electric power source where more than one is provided.

**A.8.2.2** See Table A.8.2.2 and Figure A.8.2.2.

**A.8.2.2(5)** Visual indicators other than pilot lights can be used for the same purpose.

**A.8.3** The purpose of testing the pump assembly is to ensure automatic or manual operation upon demand and continuous delivery of the required system output. An additional purpose is to detect deficiencies of the pump assembly not evident by inspection.

**A.8.3.1.1** Fire pump systems should be designed so that the pressure relief valve has a minimum flow (to verify pressure relief valve is properly set and operating) at churn, and only allows a larger flow under abnormal conditions (i.e., engine overspeed or failure of a variable speed pressure limiting control). The fire pump imparts more energy into the water when recirculating the water through the pump than when the pump is operating at churn (no flow). NFPA 20 requires a circulation relief valve downstream of the pressure relief valve whenever the pressure relief valve is piped back to the pump suction. Improperly installed and/or operating circulation relief valves can result in unacceptably high water temperature, especially when recirculating the water to the pump suction. High water temperatures can affect the operation of a diesel engine drive. Modern engines, due to EPA requirements, are more sensitive to cooling water temperatures.

**A.8.3.1.1.2** The risk analysis should be prepared and reviewed by qualified people. Increased test frequencies might be desirable when high impact losses could result from an uncontrolled fire. Examples where increased fire pump test frequencies can be considered could include high piled storage facilities and buildings where the predominant occupancy is protected by an extra hazard density sprinkler system.

Test frequency has been a heavily discussed and researched topic for several years, and is still continuing to be researched. A set of data was submitted in 2008 by a group of owners and maintainers of large numbers of fire pumps. This data was presented to the committee as indicating a decreased test frequency on electric fire pumps did not "significantly" impact "reliability"; however, "reliability" as used in the discussion of the data presentation was actually the failure rate, and did not take into account the effect of test frequency on the fire pump reliability (i.e., the time between failure and discovery of the failure affects reliability). Subsequently, the NFPA Research Council commissioned research, and the resultant "Fire Pump Field Data Collection and Analysis Report" in 2011 (available for download at www.nfpa.org\Foundation) reported that electric fire pumps tested weekly had a failure rate of approximately 0.64 per year. Assuming a failure rate independent of the test frequency, and assuming that on the average the impairment occurs at the midpoint of the test interval, this failure rate provides approximately 99.4 percent reliability with weekly testing and approximately 97.3 percent reliability with monthly testing. Diesel engine fire pumps tested weekly had a failure rate of approximately 1.02 per year. Assuming a failure rate independent of the test frequency and assuming that on the average the impairment occurs at the midpoint of the test interval, this failure rate provides approximately 99.1 percent reliability with weekly testing and approximately 96.0 percent reliability with monthly testing.

Based on this data, the lower reliability has not been determined to be acceptable for all facilities. Decisions to decrease test frequency must be based on more than cost savings. A reliability/risk analysis to decrease test frequency should take into account the risk associated with life safety, property values, hazards, and business interruption at the protected property. Fire pump redundancy can impact overall fire system reliability and be used in a reliability/risk analysis.

**A.8.3.1.2** For pressure relief valve operation, see 8.3.2.4.

**A.8.3.1.2.3** For systems where multiple fire pumps are required to meet the system demand, a one-for-one redundancy is not necessary (i.e., one backup pump for two or more primary pumps meets the intent of this section).

**A.8.3.1.2.4** The risk analysis should be prepared and reviewed by qualified people. Increased test frequencies can be desirable when high impact losses could result from an uncontrolled fire. Examples where increased fire pump test frequencies can be considered could include high piled storage facilities and buildings where the predominant occupancy is protected by an extra hazard density sprinkler system.

**A.8.3.2.7.1** An automatic timer allows a person who has been instructed on what to watch for and record during this test to monitor the test and request assistance should any issues arise.

**A.8.3.2.9** See Table A.8.3.2.9.

**A.8.3.3.1** Minimum flow for a pump is the churn pressure.

**A.8.3.3.1.2** The method described in 8.3.3.1.2.3 is not considered as complete as those in 8.3.3.1.2.1 and 8.3.3.1.2.2, because it does not test the adequacy of the water supply for compliance with the requirements of 8.1.6 at the suction flange.

**A.8.3.3.2(3)** It is not the intent to discharge water for the full 1-hour test duration, provided all flow tests can be conducted in less time and efforts are taken to prevent the pump from overheating.

Copyright 2015 National Fire Protection Association (NFPA). Licensed, by agreement, for individual use and download on October 23, 2015 to VETERANS AFFAIRS. No other reproduction or transmission in any form permitted without written permission of NFPA. For inquires or to report unauthorized use, contact licensing@nfpa.org.



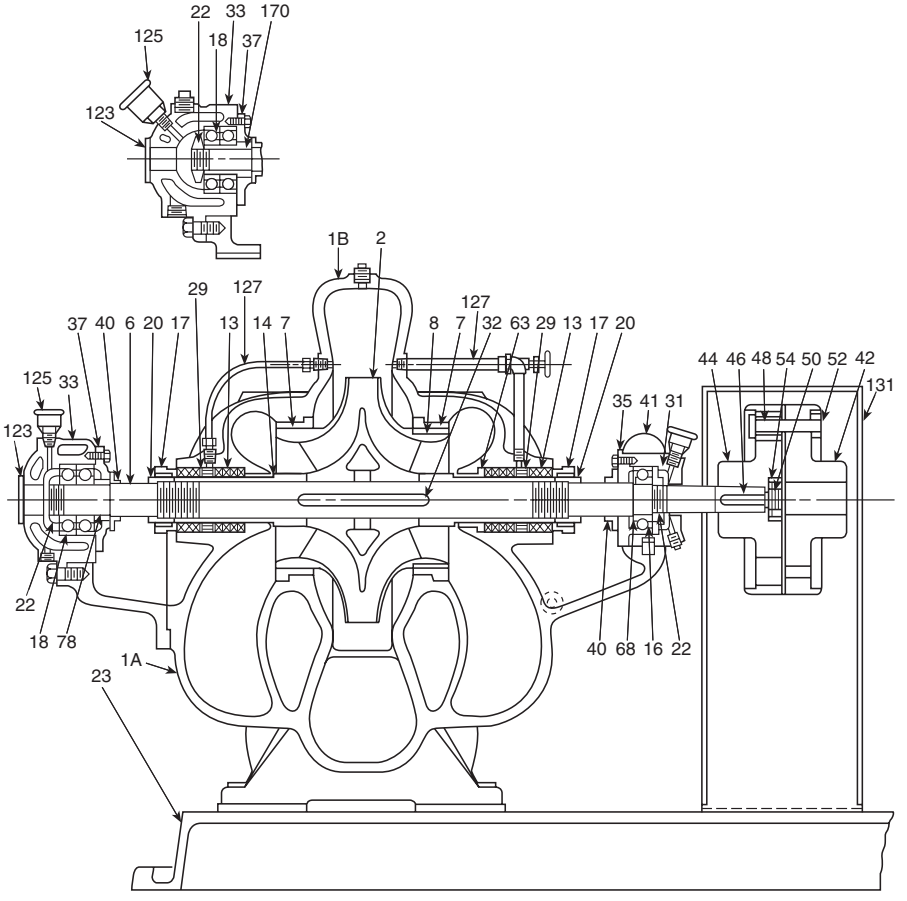


1A Casing, lower half
1B Casing, upper half
2 Impeller
6 Shaft, pump
7 Ring, casing
8 Ring, impeller
13 Packing
14 Sleeve, shaft
16 Bearing, inboard
17 Gland
18 Bearing, outboard
20 Nut, shaft sleeve
22 Locknut
23 Baseplate
29 Ring, lantern
31 Housing, bearing, inboard
32 Key, impeller
33 Housing, bearing, outboard
35 Cover, bearing, inboard
37 Cover, bearing, outboard
40 Deflector
41 Cap, bearing, inboard
42 Coupling half driver
44 Coupling half, pump
46 Key, coupling
48 Bushing, coupling
50 Locknut, coupling
52 Pin, coupling
54 Washer, coupling
63 Bushing, stuffing box
68 Collar, shaft
78 Spacer, bearing
123 Cover, bearing end
125 Cup, grease
127 Piping, seal
131 Guard, coupling
170 Adapter, bearing

The numbers used in this figure do not necessarily represent standard part numbers used by any manufacturer.

**FIGURE A.8.1.5(a) Impeller Between Bearings, Separately Coupled, Single-Stage Axial (Horizontal) Split Case.** ***(Courtesy of Hydraulic Institute, Parsippany, NJ, www.Pumps.org.)***

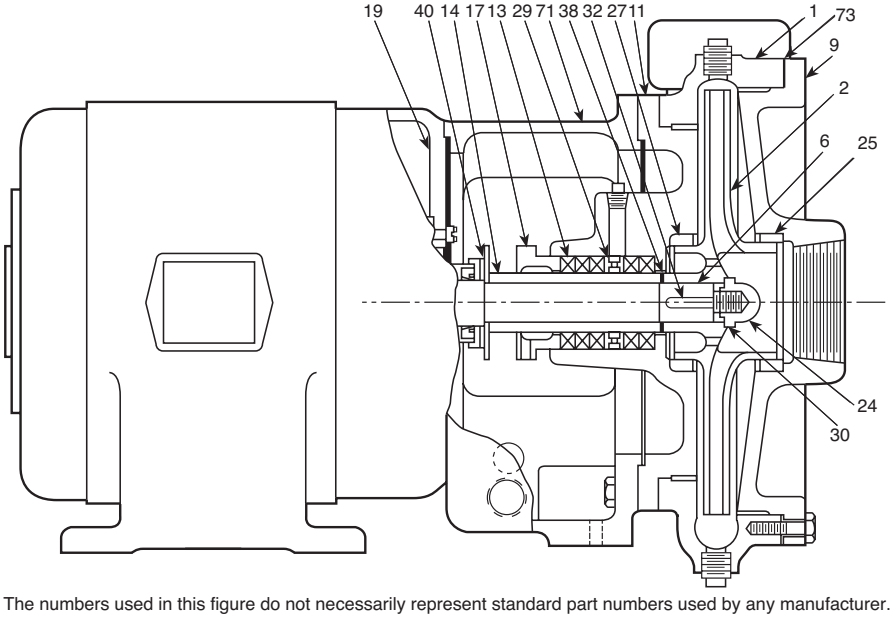


1 Casing
2 Impeller
6 Shaft
9 Cover, suction
11 Cover, stuffing box
13 Packing
14 Sleeve, shaft
17 Gland
19 Frame
24 Nut, impeller
25 Ring, suction cover
27 Ring, stuffing box cover
29 Ring, lantern
30 Gasket, impeller nut
32 Key, impeller
38 Gasket, shaft sleeve
40 Deflector
71 Adapter
73 Gasket

The numbers used in this figure do not necessarily represent standard part numbers used by any manufacturer.

**FIGURE A.8.1.5(b) Overhung Impeller, Close-Coupled, Single-Stage, End Suction.** ***(Courtesy of the Hydraulic Institute, Parsippany, NJ, www.Pumps.org.)***

Copyright 2015 National Fire Protection Association (NFPA). Licensed, by agreement, for individual use and download on October 23, 2015 to VETERANS AFFAIRS. No other reproduction or transmission in any form permitted without written permission of NFPA. For inquires or to report unauthorized use, contact licensing@nfpa.org.



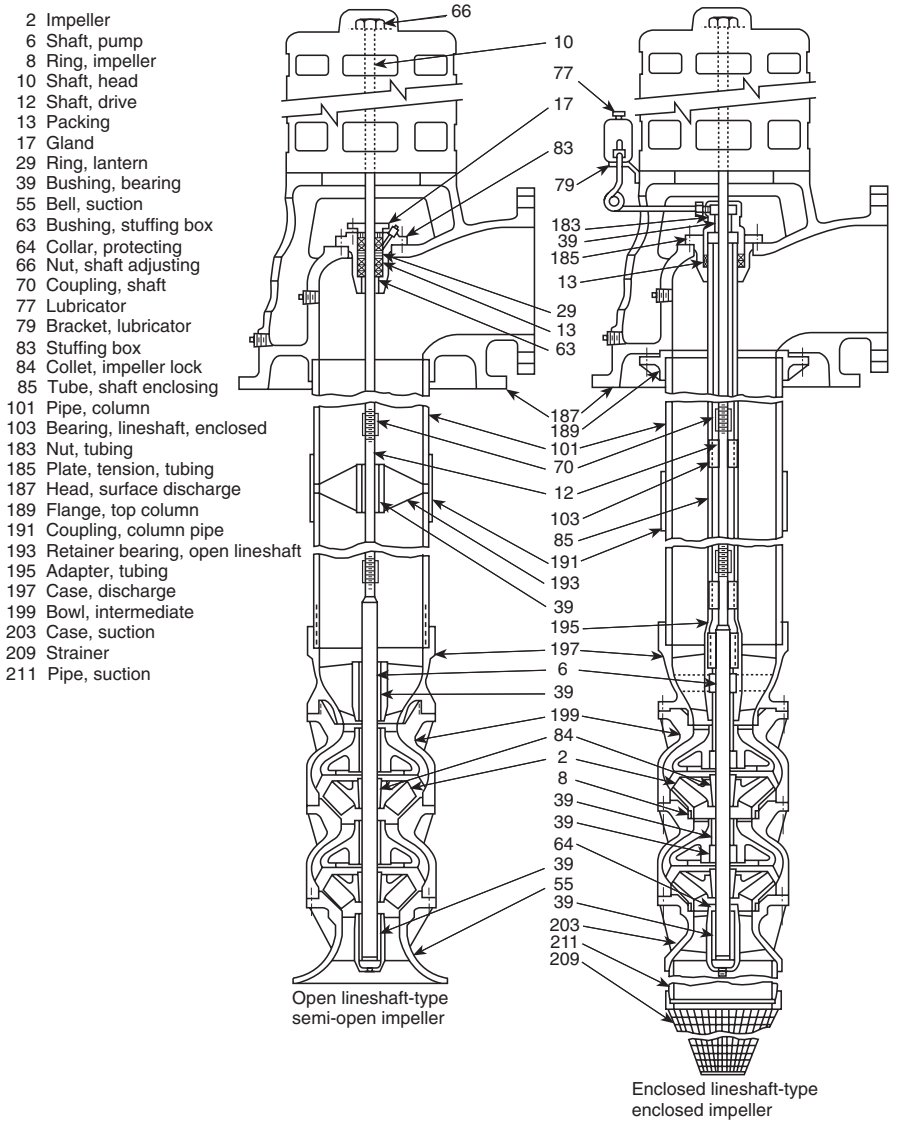


The cross-sectional views illustrate the largest possible number of parts in their proper relationship and some construction modifications but do not necessarily represent recommended design.

**FIGURE A.8.1.5(c) Turbine-Type, Vertical, Multistage, Deep Well.** ***(Courtesy of the Hydraulic Institute, Parsippany, NJ, www.Pumps.org.)***

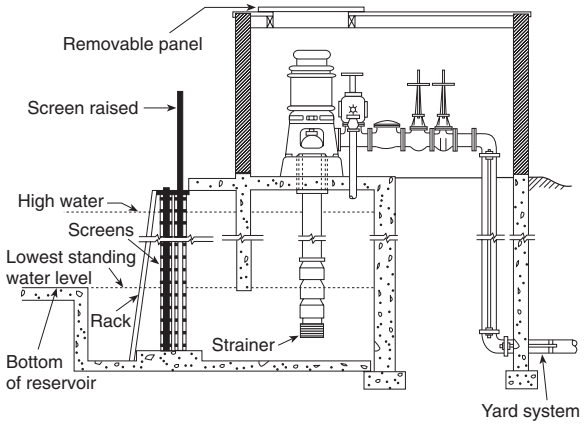


**FIGURE A.8.2.2 Wet Pit Suction Screen Installation.**

**Table A.8.2.2 Observations — Before Pumping**

| Item | Before Pump Is Operated |
|---|---|
| Horizontal pumps | 1. Inspect drip pockets under packing glands for proper drainage. Standing water in drip pockets is the most common cause of bearing failure.<br>2. Inspect packing adjustment — approximately one drop per second is necessary to keep packing lubricated.<br>3. Observe suction and discharge gauges. Readings higher than suction pressure indicate leakage back from system pressure through either the fire pump or jockey pump. |

Copyright 2015 National Fire Protection Association (NFPA). Licensed, by agreement, for individual use and download on October 23, 2015 to VETERANS AFFAIRS. No other reproduction or transmission in any form permitted without written permission of NFPA. For inquires or to report unauthorized use, contact licensing@nfpa.org.



**Table A.8.3.2.9 Observations — While Pumping**

| Item | While Pump Is Operating |
|---|---|
| Horizontal pumps | 1. Read suction and discharge gauges — difference between these readings indicates churn pressure, which should match churn pressure as shown on fire pump nameplate.<br>2. Observe packing glands for proper leakage for cooling of packing.<br>3. Observe discharge from casing relief valve — adequate flow keeps pump case from overheating. |
| Vertical pumps | 1. Read discharge gauge — add distance to water level in feet (or meters) and divide by 2.31 to compute psi (30.47 to compute bar). This total must match churn pressure as shown on fire pump nameplate.<br>2. Observe packing glands for proper leakage for cooling of packing.<br>3. Observe discharge from casing relief valve — adequate flow keeps pump case from overheating. |
| Diesel engines | 1. Observe discharge of cooling water from heat exchanger — if not adequate, inspect strainer in cooling system for obstructions. If still not adequate, adjust pressure-reducing valve for correct flow.<br>2. Inspect engine instrument panel for correct speed, oil pressure, water temperature, and ammeter charging rate.<br>3. Inspect battery terminal connections for corrosion and clean if necessary.<br>4. After pump has stopped running, inspect intake screens, if provided; replace diesel system pressure recorder chart; and rewind if necessary. |

**A.8.3.3.3** A pressure relief valve that opens during a flow condition is discharging water that is not measured by the recording device(s). It can be necessary to temporarily close the pressure relief valve to achieve favorable pump test results. At the conclusion of the pump test, the pressure relief valve must be readjusted to relieve pressures in excess of the normal operating pressure of the system components.

If the pressure relief valve is open during the flowing conditions due to the fact that the pressure is too high for the components in the fire protection system, the discharge control valve should be closed prior to closing the pressure relief valve to make sure that the fire protection system is not overpressurized. After the test, the valve must be opened again.

**A.8.3.3.3.1** A pressure relief valve that is open during a flow condition will affect test results.

**A.8.3.3.5** It is not the intent to verify that all the alarm conditions required by NFPA 20 (e.g., low oil pressure, high coolant temperature, failure of engine to start, engine overspeed) transmit individually to a remote location, as long as these alarms can be individually verified at the fire pump controller.

**A.8.3.3.6** See also *NFPA 70E* for additional safety guidance.

**A.8.3.3.7** During periods of unusual water supply conditions such as floods, inspection should be on a daily basis.

**A.8.3.3.8** *ECM and Sensor Testing*. To verify the operation of the alternate ECM with the stop, the ECM selector switch should be moved to the alternate ECM position. Repositioning of this should cause an alarm on the fire pump controller. Then the engine is started; it should operate normally with all functions. Next, the engine is shut down, switched back to the primary ECM, and restarted briefly to verify that correct switchback has been accomplished.

To verify the operation of the redundant sensor, with the engine running, the wires are disconnected from the primary sensor. There should be no change in the engine operation. The wires are then reconnected to the sensor, then disconnected from the redundant sensor. There should be no change in the engine operation. The wires should next be reconnected to the sensor. This process is repeated for all primary and redundant sensors on the engines. It should be noted whether disconnecting and reconnecting of wires to the sensors can be done while the engine is not running, then starting the engine after each disconnecting and reconnecting of the wires to verify engine operation.

**A.8.3.4.1.1** Commercial distillate fuel oils used in modern diesel engines are subject to various detrimental effects from storage. The origin of the crude oil, refinement processing techniques, time of year, and geographical consumption location all influence the determination of fuel blend formulas. Naturally occurring gums, waxes, soluble metallic soaps, water, dirt, blends, and temperature all contribute to the degradation of the fuel as it is handled and stored. These effects begin at the time of fuel refinement and continue until consumption. Proper maintenance of stored distillate fuel is critical for engine operation, efficiency, and longevity.

Storage tanks should be kept water-free. Water contributes to steel tank corrosion and the development of microbiological growth where fuel and water interface. This and the metals of the system provide elements that react with fuel to form certain gels or organic acids, resulting in clogging of filters and system corrosion. Scheduled fuel maintenance helps to reduce fuel degradation. Fuel maintenance filtration can remove contaminants and water and maintain fuel conditions to provide reliability and efficiency for standby fire pump engines. Fuel maintenance and testing should begin the day of installation and first fill.

**A.8.3.4.2** Where environmental or fuel quality conditions result in degradation of the fuel while stored in the supply tank,

Copyright 2015 National Fire Protection Association (NFPA). Licensed, by agreement, for individual use and download on October 23, 2015 to VETERANS AFFAIRS. No other reproduction or transmission in any form permitted without written permission of NFPA. For inquires or to report unauthorized use, contact licensing@nfpa.org.



from items such as water, micro-organisms and particulates, or destabilization, active fuel maintenance systems permanently installed on the fuel storage tanks have proven to be successful at maintaining fuel quality. An active fuel maintenance system will maintain the fuel quality in the tank, therefore preventing the fuel from going through possible cycles of degradation, risking engine reliability, and then requiring reconditioning.

**A.8.3.6.4** If pumps and drivers were shipped from the factory with both machines mounted on a common baseplate, they were accurately aligned before shipment. All baseplates are flexible to some extent and, therefore, must not be relied on to maintain the factory alignment. Realignment is necessary after the complete unit has been leveled on the foundation and again after the grout has set and foundation bolts have been tightened. The alignment should be inspected after the unit is piped and reinspected periodically. To facilitate accurate field alignment, most manufacturers either do not dowel the pumps or drivers on the baseplates before shipment or, at most, dowel the pump only.

After the pump and driver unit has been placed on the foundation, the coupling halves should be disconnected. The coupling should not be reconnected until the alignment operations have been completed.

The purpose of the flexible coupling is to compensate for temperature changes and to permit end movement of the shafts without interference with each other while transmitting power from the driver to the pump.

There are two forms of misalignment between the pump shaft and the driver shaft:

(1) *Angular misalignment.* Shafts with axes concentric but not parallel
(2) *Parallel misalignment.* Shafts with axes parallel but not concentric

The faces of the coupling halves should be spaced within the manufacturer's recommendations and far enough apart so that they cannot strike each other when the driver rotor is moved hard over toward the pump. Due allowance should be made for wear of the thrust bearings. The necessary tools for an approximate inspection of the alignment of a flexible coupling are a straight edge and a taper gauge or a set of feeler gauges.

A check for angular alignment is made by inserting the taper gauge or feelers at four points between the coupling faces and comparing the distance between the faces at four points spaced at 90 degree intervals around the coupling *[see Figure A.8.3.6.4(a)]*. The unit will be in angular alignment when the measurements show that the coupling faces are the same distance apart at all points.

A check for parallel alignment is made by placing a straight edge across both coupling rims at the top, bottom, and at both sides *[see Figure A.8.3.6.4(b)]*. The unit will be in parallel alignment when the straight edge rests evenly on the coupling rim at all positions. Allowance might be necessary for temperature changes and for coupling halves that are not of the same outside diameter. Care must be taken to have the straight edge parallel to the axes of the shafts.

Angular and parallel misalignment are corrected by means of shims under the motor mounting feet. After each change, it is necessary to recheck the alignment of the coupling halves. Adjustment in one direction might disturb adjustments already made in another direction. It should not be necessary to adjust the shims under the pump.

The permissible amount of misalignment will vary with the type of pump and driver; and coupling manufacturer, model, and size. [**20:** A.6.5]

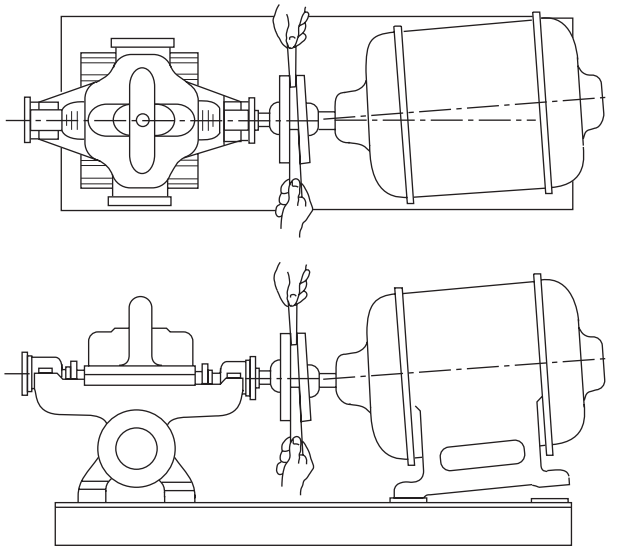

**FIGURE A.8.3.6.4(a) Checking Angular Alignment.** ***(Courtesy of the Hydraulic Institute, Parsippany, NJ, www.Pumps.org)***

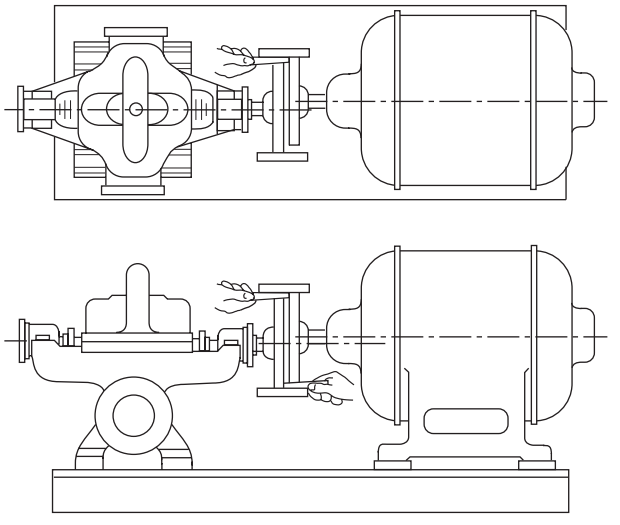

**FIGURE A.8.3.6.4(b) Checking Parallel Alignment.** ***(Courtesy of the Hydraulic Institute, Parsippany, NJ, www.Pumps.org..)***

**A.8.3.7.1** Where the information is available, the test plot should be compared with the original acceptance test plot. It should be recognized that the acceptance test plot could exceed the minimum acceptable pump requirements as indicated by the rated characteristics for the pump. While a reduction in output is a matter of concern, this condition should be evaluated in light of meeting the rated characteristics for the pump. *[See Figure A.8.3.7.3(1)(a).]*

Copyright 2015 National Fire Protection Association (NFPA). Licensed, by agreement, for individual use and download on October 23, 2015 to VETERANS AFFAIRS. No other reproduction or transmission in any form permitted without written permission of NFPA. For inquires or to report unauthorized use, contact licensing@nfpa.org.



The test equipment should be of high quality and accuracy. All equipment should have been calibrated within the last 12 months by an approved calibration facility. Where possible, the calibration facility should provide documentation indicating the instrument reading against the calibrated reading. Instruments that pass the calibration test should be labeled by the calibration facility with the name of the facility and the date of the test.

Pressure gauges should have an accuracy not greater than 1 percent of full scale. To prevent damage to a pressure gauge utilizing a Bourdon tube mechanism, it should not be used where the expected test pressure is greater than 75 percent of the test gauge scale. Some digital gauges can be subjected to twice the full scale pressure without damage. The manufacturer's recommendations should be consulted for the proper use of the gauge. To be able to easily read an analog gauge, the diameter of the face of the analog gauge should be greater than 3 in. (76 mm). Pressure snubbers should be used for all gauges to minimize needle fluctuation. All gauges used in the test should be such that a gauge with the lowest full scale pressure is used. For example, a 300 psi (20.7 bar) gauge should not be used to measure a 20 psi (1.4 bar) pitot pressure.

Equipment other than pressure gauges, such as volt/ammeters, tachometers, and flowmeters, should be calibrated to the manufacturer's specifications. The readings from equipment with this level of accuracy and calibration can be used without adjustment for accuracy.

**A.8.3.7.3(1)** See Figure A.8.3.7.3(1)(a) and Figure A.8.3.7.3(1)(b).

**A.8.3.7.4** See Annex C.

**A.8.5.1** It is important to provide proper bearing lubrication and to keep bearings clean. Some bearings are the sealed type and need no relubrication. Couplings with rubber drive parts do not need lubrication; other types generally do. The following practices are recommended:

(1) Lubricant fittings should be cleaned before relubricating with grease.
(2) The proper amount of lubricant should be used. Too much lubricant results in churning, causing excessive power loss and overheating.
(3) The correct lubricant should be used.

**Engine Maintenance.** Engines should be kept clean, dry, and well lubricated. The proper oil level in the crankcase should be maintained.

**Battery Maintenance.** Only distilled water should be used in battery cells. Plates should be kept submerged at all times. An automatic battery charger is not a substitute for proper maintenance of the battery and charger. Periodic inspection ensures that the charger is operating correctly, the water level in the battery is adequate, and the battery is holding its proper charge.

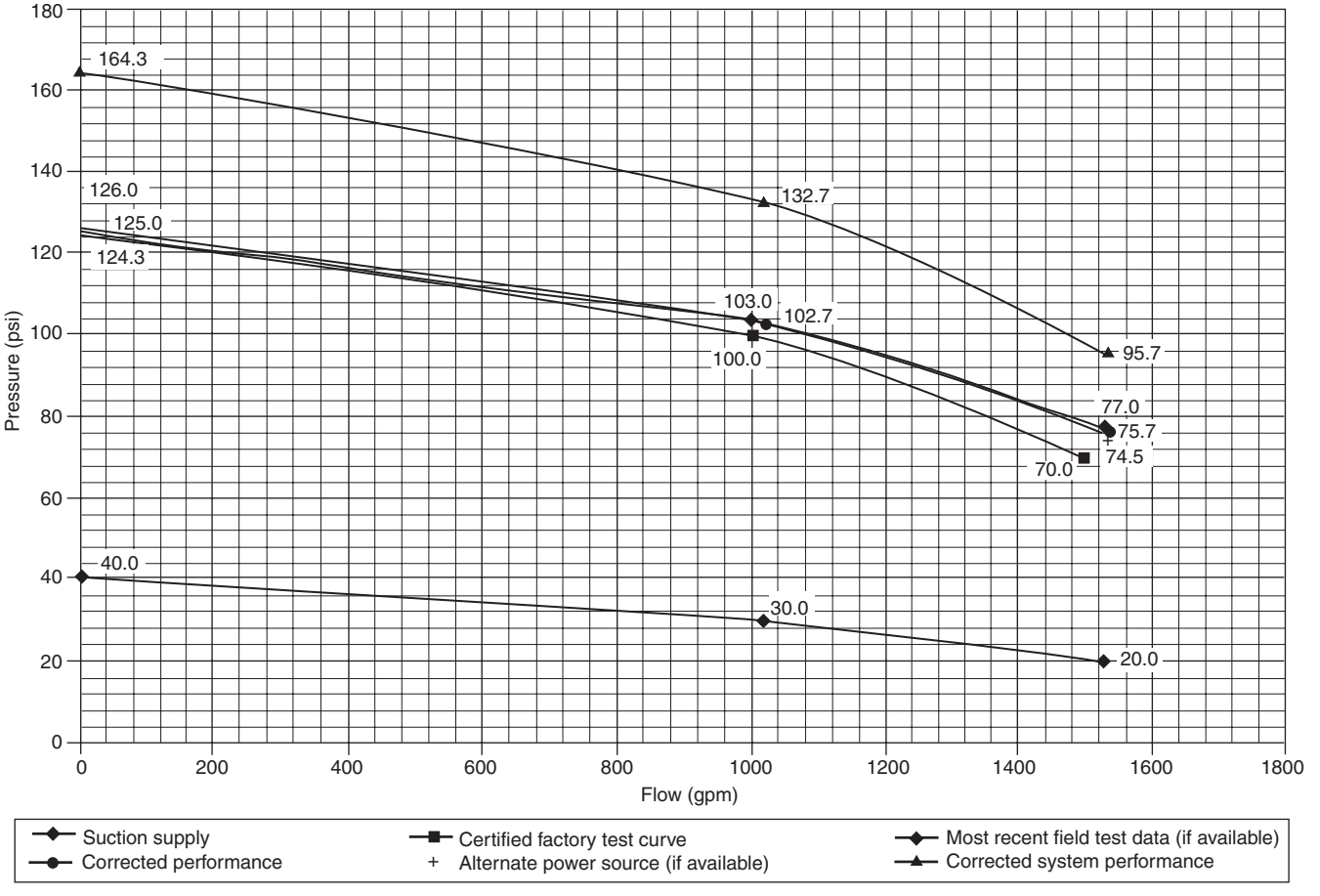


**FIGURE A.8.3.7.3(1)(a) Fire Pump Performance Curve — Corrected Data.**

Copyright 2015 National Fire Protection Association (NFPA). Licensed, by agreement, for individual use and download on October 23, 2015 to VETERANS AFFAIRS. No other reproduction or transmission in any form permitted without written permission of NFPA. For inquires or to report unauthorized use, contact licensing@nfpa.org.



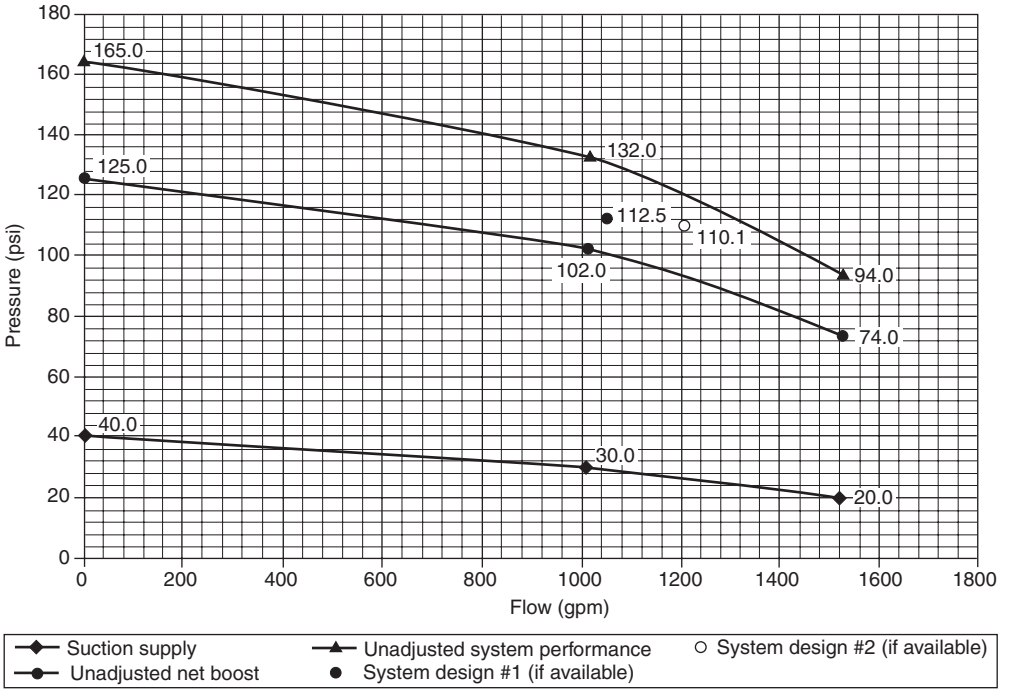


**FIGURE A.8.3.7.3(1)(b) Fire Pump Performance Curve — Unadjusted Data.**

**Fuel Supply Maintenance.** The fuel storage tank should be kept at least two-thirds full. Fuel should be maintained free of water and foreign material by draining water and foreign material from the tank sump annually. This necessitates draining approximately 5 gal (19 L).

**Temperature Maintenance.** The temperature of the pump room, pump house, or area where engines are installed should never be less than the minimum recommended by the engine manufacturer. The manufacturer's temperature recommendations for water and oil heaters should be followed.

**A.9.1** One source of information on the inspection and maintenance of steel gravity and suction tanks is the AWWA *Manual of Water Supply Practices — M42 Steel Water-Storage Tanks*, Part III and Annex C.

**A.9.2.1.1** More frequent inspections should be made where extreme conditions, such as freezing temperatures or arid climate, can increase the probability of adversely affecting the stored water.

Supervisory water level alarms installed on tanks provide notification that the tank water level is above or below an acceptable level. The water level of the tank is the main concern as opposed to the condition of the water. For convenience, inspection of the condition of the water can take place concurrently with the water level inspection.

**A.9.2.5.1** Lightning protection systems, where provided, should be inspected, tested, and maintained in accordance with NFPA 780, *Standard for the Installation of Lightning Protection Systems.*

**A.9.2.6.1.1** To aid in the inspection and evaluation of test results, it is a good idea for the property owner or designated representative to stencil the last known date of an interior paint job on the exterior of the tank in a conspicuous place. A typical place is near one of the manways at eye level.

**A.9.2.6.1.2** If written verification of interior corrosion protection for a tank per NFPA 22, *Standard for Water Tanks for Private Fire Protection*, cannot be provided by the building owner, the interior of the tank should be inspected every 3 years.

**A.9.2.6.5** This inspection can be performed by looking for dents on the tank floor. Additionally, walking on the tank floor and looking for buckling of the floor will identify problem areas.

**A.9.3.1** The testing procedure for listed mercury gauges is as follows.

To determine that the mercury gauge is accurate, the gauge should be tested every 5 years as follows [steps (1) through (7) coincide with Figure A.9.3.1]:

(1) Overflow the tank.
(2) Close valve F. Open test cock D. The mercury will drop quickly into the mercury pot. If it does not drop, there is an obstruction that needs to be removed from the pipe or pot between the test cock and the gauge glass.
(3) If the mercury does lower at once, close cock D and open valve F. If the mercury responds immediately and comes to rest promptly opposite the "FULL" mark on the gauge board, the instrument is functioning properly.
(4) If the mercury column does not respond promptly and indicate the correct reading during the test, there probably are air pockets or obstructions in the water connecting pipe. Open cock D. Water should flow out forcibly. Allow water to flow through cock D until all air is expelled and rusty water from the tank riser appears. Close cock D. The gauge now likely will read correctly. If air separates from the water in the 1 in. (25 mm) pipe due to being enclosed in a buried tile conduit with steam pipes, the air can be removed automatically by installing a ¾ in. (20 mm) air trap at the high point of the piping. The air

Copyright 2015 National Fire Protection Association (NFPA). Licensed, by agreement, for individual use and download on October 23, 2015 to VETERANS AFFAIRS. No other reproduction or transmission in any form permitted without written permission of NFPA. For inquires or to report unauthorized use, contact licensing@nfpa.org.



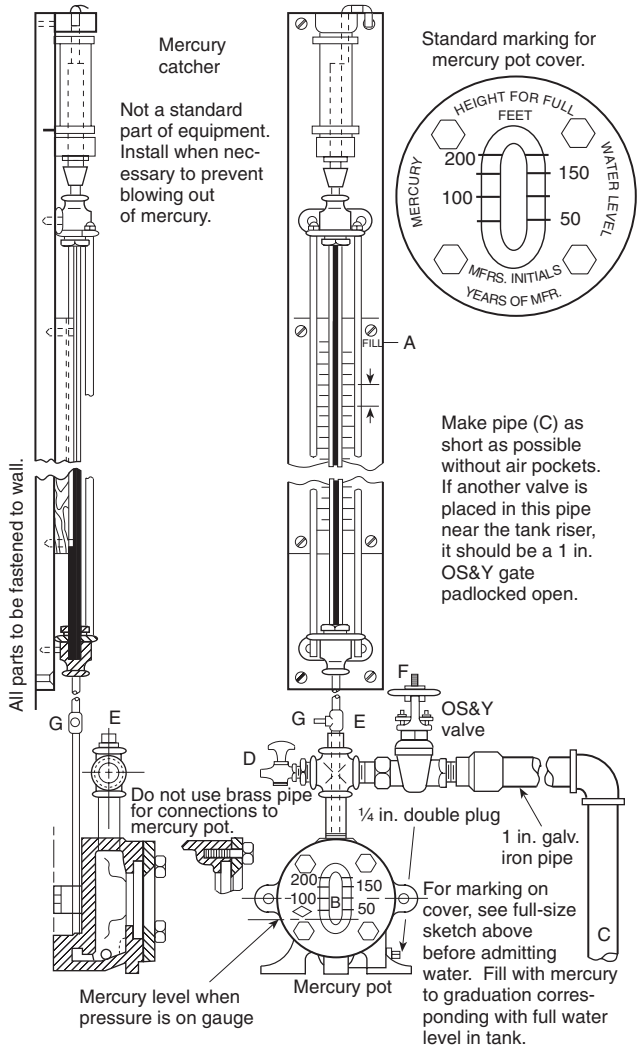


Note: For SI units, 1 in. = 25.4 mm.

**FIGURE A.9.3.1 Mercury Gauge.**

trap usually can be installed most easily in a tee connected by a short piece of pipe at E, with a plug in the top of the tee so that mercury can be added in the future, if necessary, without removing the trap. If there are inaccessible pockets in the piping, as where located below grade or under concrete floors, the air can be removed only through petcock D.

(5) If, in step (4), the water does not flow forcibly through cock D, there is an obstruction that needs to be removed from the outlet of the test cock or from the water pipe between the test cock and the tank riser.

(6) If there is water on top of the mercury column in the gauge glass, it will provide inaccurate readings and should be removed. First, lower the mercury into the pot as in step (2). Close cock D and remove plug G. Open valve F very slowly, causing the mercury to rise slowly and the water above it to drain through plug G. Close valve F quickly when mercury appears at plug G, but have a receptacle ready to catch any mercury that drains out. Replace plug G. Replace any escaped mercury in the pot.

(7) After testing, leave valve F open, except under the following conditions: If it is necessary to prevent forcing mercury and water into the mercury catcher, the controlling valve F can be permitted to be closed when filling the tank but should be left open after the tank is filled. In cases where the gauge is subjected to continual fluctuation of pressure, it could be necessary to keep the gauge shut off except when it needs to be read. Otherwise, it could be necessary to remove water frequently from the top of the mercury column as in step (5).

**A.9.3.4** The manufacturer's instructions should be consulted for guidance on testing. In some situations, it might not be possible to test the actual initiating device. In such cases, only the circuitry should be tested.

**A.9.3.5** See A.9.3.4.

**A.9.3.6** See A.5.3.2.

**A.10.1** The effectiveness and reliability of water spray fixed systems depends on maintenance of the integrity of hydraulic characteristics, water control valves, deluge valves and their fire detection/actuation systems, pipe hangers, and prevention of obstructions to nozzle discharge patterns.

Water spray fixed systems are most commonly used to protect processing equipment and structures, flammable liquid and gas vessels, piping, and equipment such as transformers, oil switches, and motors. They also have been shown to be effective on many combustible solids.

Many of the components and subsystems found in a water spray system require the same inspection, test, and maintenance procedures where they are used in automatic sprinkler systems and other fixed water-based fire protection systems. Other chapters of this standard should be consulted for particulars on required inspection and maintenance.

**A.10.1.3** Insulation acting in lieu of water spray protection is expected to protect a vessel or structure for the duration of the exposure. The insulation is to prevent the temperature from exceeding 850°F (454°C) for structural members and 650°F (393°C) for vessels. If the insulation is missing, the structure or vessel is not considered to be protected, regardless of water spray protection or insulation on other surfaces. To reestablish the proper protection, the insulation should be replaced or the water spray protection should be extended, using the appropriate density.

**A.10.1.6** The inspection, testing, and maintenance of water spray fixed systems can involve or result in a system that is out of service. Also see Chapter 15.

**A.10.2.4** The operation of the water spray system is dependent on the integrity of the piping, which should be kept in good condition and free of mechanical damage. The pipe should not be used for support of ladders, stock, or other material. Where piping is subject to a corrosive atmosphere, a protective corrosion-resistant coating should be provided and maintained. Where the age or service conditions warrant, an internal examination of the piping should be made. Where it is necessary to flush all or part of the piping system, this work should be done by sprinkler contractors or other qualified workers.

**A.10.2.4.1** Rubber-gasketed fittings in the fire areas are inspected to determine whether they are protected by the water spray or other approved means. Unless properly protected,

Copyright 2015 National Fire Protection Association (NFPA). Licensed, by agreement, for individual use and download on October 23, 2015 to VETERANS AFFAIRS. No other reproduction or transmission in any form permitted without written permission of NFPA. For inquires or to report unauthorized use, contact licensing@nfpa.org.



fire could cause loss of the rubber gasket following excessive leakage in a fire situation.

**A.10.2.4.2** Hangers and supports are designed to support and restrain the piping from severe movement when the water supply operates and to provide adequate pipe slope for drainage of water from the piping after the water spray system is shut down. Hangers should be kept in good repair. Broken or loose hangers can put undue strain on piping and fittings, cause pipe breaks, and interfere with proper drainage of the pipe. Broken or loose hangers should be replaced or refastened.

**A.10.2.5** Systems need inspection to ensure water spray nozzles effectively discharge water unobstructed onto surfaces to be protected from radiant heat (exposure protection) or onto flaming surfaces to extinguish or control combustion. Factors affecting the proper placement of water spray nozzles include the following:

(1) Changes or additions to the protected area that obstruct existing nozzles or require additional coverage for compliance
(2) Removal of equipment from the protected area that results in nozzle placement at excessive distances from the hazard
(3) Mechanical damage or previous flow tests that have caused nozzles to be misdirected
(4) A change in the hazard being protected that requires more or different nozzles to provide adequate coverage for compliance

Spray nozzles can be permitted to be placed in any position necessary to obtain proper coverage of the protected area. Positioning of nozzles with respect to surfaces to be protected, or to fires to be controlled or extinguished, should be guided by the particular nozzle design and the character of water spray produced. In positioning nozzles, care should be taken that the water spray does not miss the targeted surface and reduce the efficiency or calculated discharge rate.

**A.10.2.6.2** Water supply piping should be free of internal obstructions that can be caused by debris (e.g., rocks, mud, tubercles) or by closed or partially closed control valves. See Chapter 5 for inspection and maintenance requirements.

**A.10.2.7** Mainline strainers should be removed and inspected for damaged and corroded parts every 5 years.

**A.10.3.2** The property owner or designated representative should take care to prevent damage to equipment or the structure during the test. Damage could be caused by the system discharge or by runoff from the test site. It should be verified that there is adequate and unobstructed drainage. Equipment should be removed or covered as necessary to prevent damage. Means such as curbing or sandbagging should be used to prevent entry of the water.

**A.10.3.3.1** Test methods are as follows:

(1) Some detection circuits can be permitted to be deliberately desensitized in order to override unusual ambient conditions. In such cases, the response required in 10.3.3.1 can be permitted to be exceeded.
(2) Testing of integrating tubing systems can be permitted to be related to this test by means of a standard pressure impulse test specified by the listing laboratory.
(3) One method of testing heat detection uses a radiant heat surface at a temperature of 300°F (149°C) and a capacity of 350 watts at a distance of 1 in. (25 mm) but not more than 2 in. (50 mm) from the nearest part of the detector. This method of testing with an electric test set should not be used in hazardous locations. Other test methods can be permitted to be employed, but the results should be obtained under these conditions.

**A.10.3.3.3** Spray nozzles can be of different sizes and types. Some are more subject to internal obstructions than others.

**A.10.3.3.3.1** See 13.4.3.2.2.3.

**A.11.2.5** Directional-type foam-water discharge devices are quite often located in heavy traffic areas and are more apt to be dislocated compared to ordinary sprinkler locations. Of particular concern are low-level discharge devices in loading racks in and around low-level tankage and monitor-mounted devices that have been pushed out of the way for convenience. Inspection frequency might have to be increased accordingly.

**A.11.2.5.4** Discharge devices are listed or approved for particular foam concentrates.

**A.11.2.6.2** Water supply piping should be free of internal obstructions that can be caused by debris (e.g., rocks, mud, tubercles) or by closed or partially closed control valves. See Chapter 5 for inspection and maintenance requirements.

**A.11.2.9** Proportioning systems might or might not include foam concentrate pumps. If pumps are part of the proportioning system, the driver, pump, and gear reducer should be inspected in accordance with the manufacturer's recommendations, and the inspection can include items such as lubrication, fuel, filters, oil levels, and clutches.

**A.11.2.9.4** In some cases, an adequate supply of foam liquid is available without a full tank. This is particularly true of foam liquid stored in nonmetallic tanks. If liquid is stored in metallic tanks, the proper liquid level should be one-half the distance into the expansion dome.

**A.11.2.9.5.1.1** The standard pressure proportioner is a pressure vessel. Although under normal standby conditions this type of proportioning system should not be pressurized, some installations allow for inadvertent pressurization. Pressure should be removed before inspection.

**A.11.2.9.5.2.1** The bladder tank proportioner is a pressure vessel. Where inspecting for a full liquid tank, the manufacturer's instructions should be followed. If inspected incorrectly, the tank sight gauges could indicate a full tank when the tank actually is empty of foam liquid. Some foam liquids, due to their viscosity, might not indicate true levels of foam liquid in the tank where inspected via the sight glass.

**CAUTION:** Depending on system configuration, this type of proportioner system might be pressurized or nonpressurized under normal conditions. Pressure should be removed before inspection.

**A.11.2.9.5.3(1)** See 11.2.7.1.

**A.11.2.9.5.3(2)** See Figure A.3.3.32.

**A.11.2.9.5.4(1)** See 11.2.7.1.

**A.11.2.9.5.4(2)** See Figure A.3.3.32.

**A.11.2.9.5.5(1)** See 11.2.7.1.

**A.11.2.9.5.5(2)** See Figure A.3.3.32.

**A.11.2.9.5.6(1)** See 11.2.7.1.

**A.11.2.9.5.6(2)** See Figure A.3.3.32.

Copyright 2015 National Fire Protection Association (NFPA). Licensed, by agreement, for individual use and download on October 23, 2015 to VETERANS AFFAIRS. No other reproduction or transmission in any form permitted without written permission of NFPA. For inquires or to report unauthorized use, contact licensing@nfpa.org.



**A.11.3** Operational tests generally should be comprised of the following:

(1) A detection/actuation test with no flow to verify that all components such as automated valves, foam and water pumps, and alarms operate properly
(2) A water-only flow test to inspect piping continuity, discharge patterns, pressures, and line flushing
(3) A foam flow test to verify solution concentration
(4) Resetting of system to its normal standby condition, including draining of lines and filling of foam liquid tank

**A.11.3.1** The property owner or designated representative should take care to prevent damage to equipment or the structure during the test. Damage could be caused by the system discharge or by runoff from the test site. It should be verified that there is adequate and unobstructed drainage. Equipment should be removed or covered as necessary to prevent damage. Means such as curbing or sandbagging should be used to prevent entry of the foam-water solution.

**A.11.3.2** An alternative method for achieving flow can be permitted to be an installation as shown in Figure A.11.3.2. This type of testing does not verify system pipe conditions or discharge device performance but only the water supply, foam concentrate supply, and proportioning accuracy.

**A.11.3.2.7** Specific foam concentrates typically are listed or approved with specific sprinklers. Part of the approval and listing is a minimum sprinkler operating pressure. Sprinkler operating pressure affects foam quality, discharge patterns, and fire extinguishment (control) capabilities. Discharge pressures less than this specified minimum pressure should be corrected immediately; therefore, it is necessary to test under full flow conditions.

**A.11.4** The maintenance items specified in the body of this standard are in addition to the typical inspection and test procedures indicated. Foam-water systems are, as are all fire protection systems, designed to be basically maintenance free. There are, however, some areas that need special attention. Foam concentrate shelf life varies between liquids and is affected by factors such as heat, cold, dilution, contamination, and many others. As with all systems, common sense dictates those maintenance-sensitive areas that should be given attention. Routine testing and inspection generally dictate the need for additional maintenance items. Those maintenance items specified are key procedures that should be performed routinely.

**A.11.4.3.2** Foam concentrates tend to settle out over time. Depending on the specific characteristics of the foam concentrate, sedimentation accumulates in the bottom of the storage vessel. This sediment can affect proportioning and foam concentrate integrity. Some concentrates tend to settle out more rapidly than others. If the annual samples indicate excessive sediment, flushing the tank could be required more frequently.

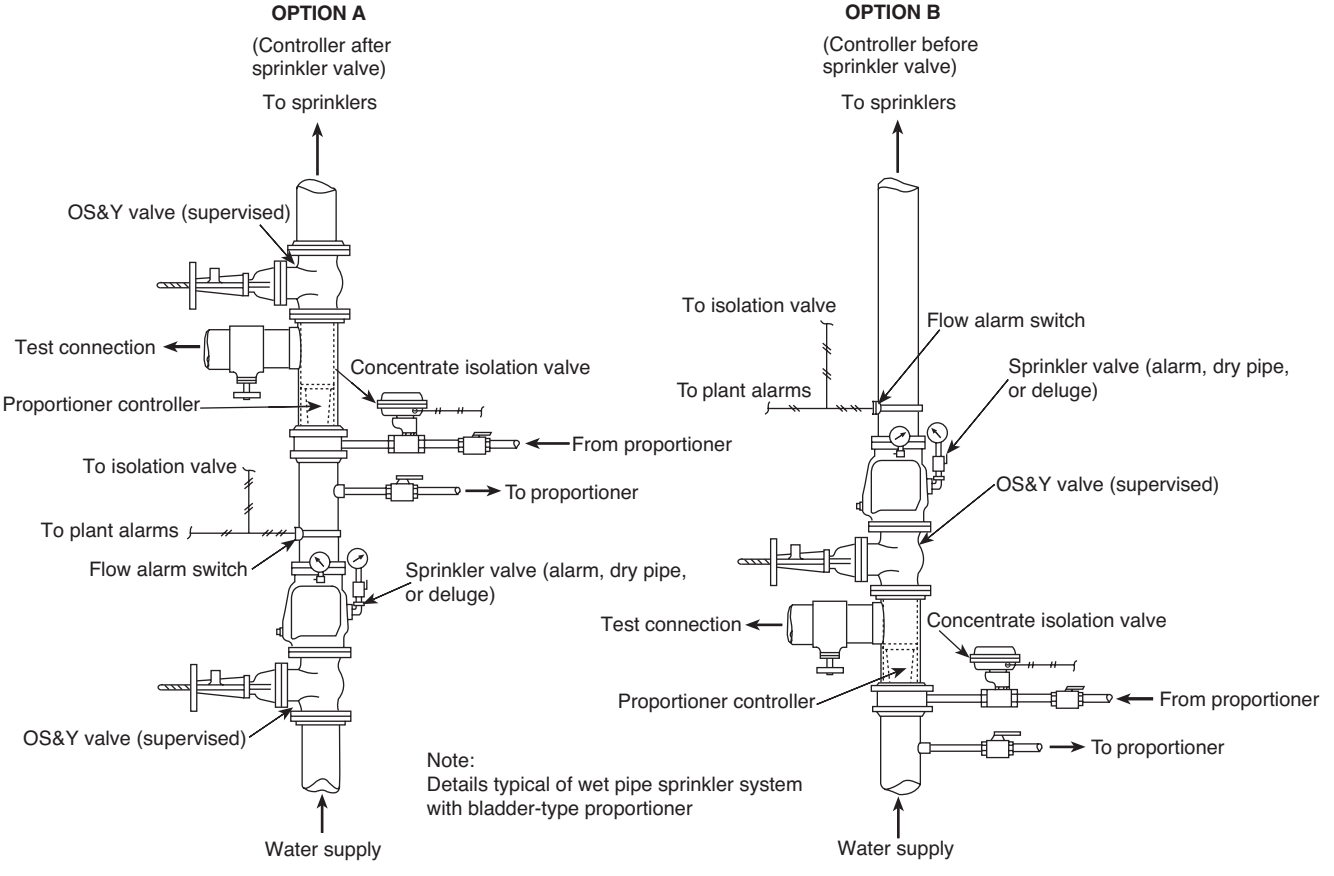


**FIGURE A.11.3.2 Foam System/Test Header Combination.**

Copyright 2015 National Fire Protection Association (NFPA). Licensed, by agreement, for individual use and download on October 23, 2015 to VETERANS AFFAIRS. No other reproduction or transmission in any form permitted without written permission of NFPA. For inquires or to report unauthorized use, contact licensing@nfpa.org.



**A.11.4.4.2** Where hydrostatically testing bladder tanks, the generation of a pressure differential across the diaphragm should not be allowed. The manufacturer should be consulted for specific procedures.

**A.12.1.2.1.1(5)** In lieu of replacing water mist nozzles that are loaded with a coating of dust, it is permitted to clean the nozzles with compressed air or by a vacuum provided that the equipment does not touch the nozzle.

**A.12.1.2.3** Water mist nozzles should be first given a visual inspection for signs of mechanical damage, cleaning, painting, leakage in service, or severe loading or corrosion, all of which are causes for immediate replacement. Nozzles that have passed the visual inspection should be laboratory tested for sensitivity and functionality. Thermal sensitivity should be not less than that permitted in post-corrosion testing of new water mist nozzles of the same type. Water mist nozzles that have been in service for a number of years should not be expected to have all of the performance qualities of a new water mist nozzle. However, if there is any question about their continued satisfactory performance, the water mist nozzles should be replaced.

**A.12.1.2.3.2** These environments include outdoor weather conditions and portions of any area where corrosive vapors prevail. Harsh water environments include water supplies that are chemically reactive.

**A.12.1.2.4** Within the area represented by the selected sample, water mist nozzles of the same design produced by the same manufacturer can be considered part of the same sample, but additional water mist nozzles would need to be selected if produced by a different manufacturer.

**A.12.2.1.5** The representative sample should include 10 percent of the water mist nozzles in the activated zone. If contamination of filters or strainers is found on inspection, it is recommended that all nozzles within the activated zone be inspected.

**A.12.2.2.1** Each water mist nozzle has unique requirements for protection applications and end-use limitations.

**A.12.2.2.3** A minimum of two water mist nozzles of each type and temperature rating installed should be provided.

**A.12.2.2.4** Other types of wrenches could damage the water mist nozzles.

**A.12.2.2.5.2** Typical sandwich bags purchased in a grocery store are generally plastic, not cellophane. Plastic bags have a tendency to shrink and adhere to the nozzles prior to nozzle activation, creating the potential for disruption of nozzle spray pattern. Bags placed over nozzles need to be cellophane or paper.

**A.13.1** *Alarm Valves.* Alarm valves are installed in water-based fire protection systems to sound a fire alarm when a flow of water from the system equals or exceeds the flow of a single discharge device. A retarding chamber, which minimizes false alarms due to surges and fluctuating water supply pressure, can be supplied with the alarm valve.

*Backflow Prevention Devices.* Backflow prevention devices are used to prevent water in a fire protection system from entering the public water supply due to a reverse flow of water, thermal expansion, hydraulic shock, back pressure, or back siphonage. *[See Figure A.13.1(a).]*

*Ball Valves.* Ball valves are manually operated through their full range of open to closed positions with a one-quarter turn.

*Butterfly Valves.* Butterfly valves are water supply control valves with gear operators to assist in opening and closing. Butterfly valves can be of the wafer or grooved-end type. *[See Figure A.13.1(b).]*

*Check Valves.* Check valves allow waterflow in one direction only. *[See Figure A.13.1(c).]*

*DCA.* A double check assembly (DCA) consists of two independently operating spring-loaded check valves. The assembly includes two resilient-seated isolation valves and four test cocks required for testing.

*DCDA.* A double check detector assembly (DCDA) is hydraulically balanced to include a metered bypass assembly to detect system leakage. The main valve assembly and bypass assembly afford equal levels of backflow prevention and are each equipped with two resilient-seated isolation valves and four test cocks required for testing.

*Deluge Valves.* Deluge valves hold water at the valve until actuated by the operation of a detection system or manual release. *[See Figure A.13.1(d).]*

*Drip Valves.* Drip valves automatically drain condensation or small amounts of water that have leaked into system piping or valves. Drip valves close when exposed to system pressure.

*Dry Pipe Valves.* Dry pipe valves control the flow of water to areas that could be exposed to freezing conditions. Water is held at the valve by air pressure in the system piping. When the air pressure is reduced, the valve operates and floods the system. *[See Figure A.13.1(e) and Figure A.13.1(f).]*

*Indicating Valves.* Indicating valves provide a dependable, visible indication of the open position, even at a distance.

*Indicator Posts.* Indicator posts include wall and underground types and are intended for use in operating inside screwed pattern gate valves and for indicating the position of the gates in the valves. *[See Figure A.13.1(g).]*

*NRS Gate Valves, OS&Y Gate Valves.* Nonrising stem (NRS) gate valves are used underground with indicator posts attached or as roadway box valves (curb-box installation). Outside screw and yoke (OS&Y) gate valves are used indoors and in pits outdoors. The valve stem moves out when the valve is open and moves in when it is closed. The stem indicates the position of the valve. *[See Figure A.13.1(h) and Figure A.13.1(i).]*

*RPA.* A reduced-pressure zone principle assembly (RPA) consists of two independently spring-loaded check valves separated by a differential-sensing valve. The differential-sensing valve includes a relief port to atmosphere that discharges excess water resulting from supply system fluctuations. The assembly includes two resilient-seated isolation valves and four test cocks required for testing.

*RPDA.* A reduced-pressure detector assembly (RPDA) is hydraulically balanced to include a metered bypass assembly to detect system leakage. The main valve assembly and bypass assembly afford equal levels of backflow prevention, and each assembly is equipped with two resilient-seated isolation valves and four test cocks required for testing.

*Strainers.* Strainers are used for protection against clogging of water discharge openings.

*Waterflow Detector Check Valves.* Detector-type check valves allow flow in one direction only and have provisions for the connection of a bypass meter around the check valve. *[See Figure A.13.1(c).]*

Copyright 2015 National Fire Protection Association (NFPA). Licensed, by agreement, for individual use and download on October 23, 2015 to VETERANS AFFAIRS. No other reproduction or transmission in any form permitted without written permission of NFPA. For inquires or to report unauthorized use, contact licensing@nfpa.org.



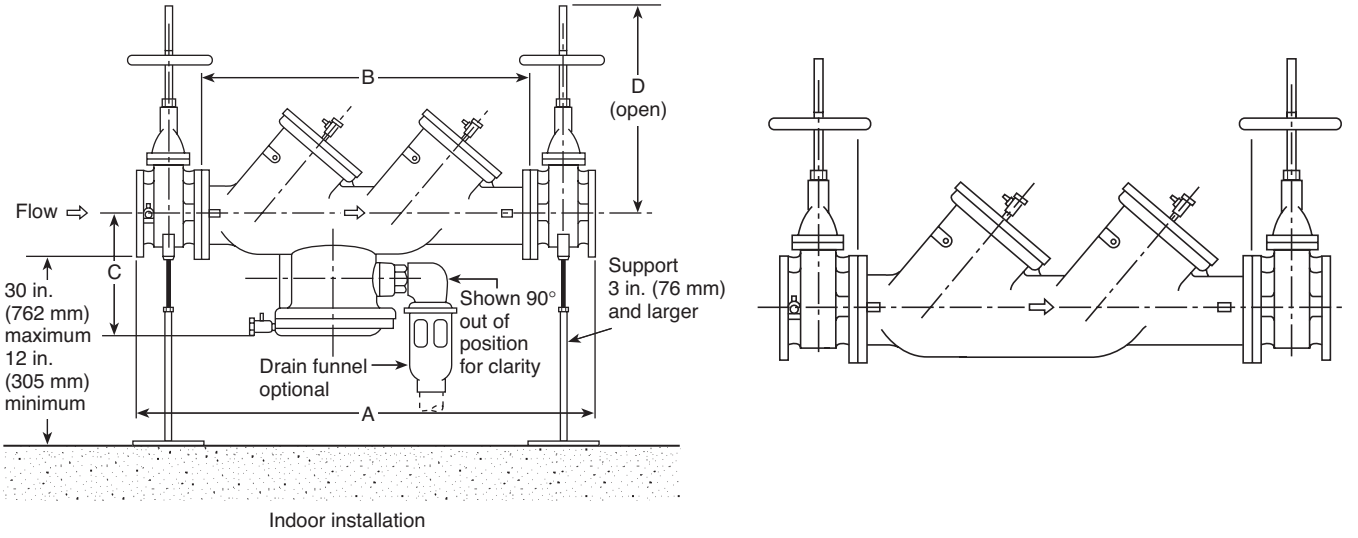


**FIGURE A.13.1(a) Reduced-Pressure Backflow Preventers (left) and Double Check Valve Assemblies (right).**

**FIGURE A.13.1(b) Butterfly Post Indicator Valve.** ***(Courtesy of Henry Pratt Co.)***

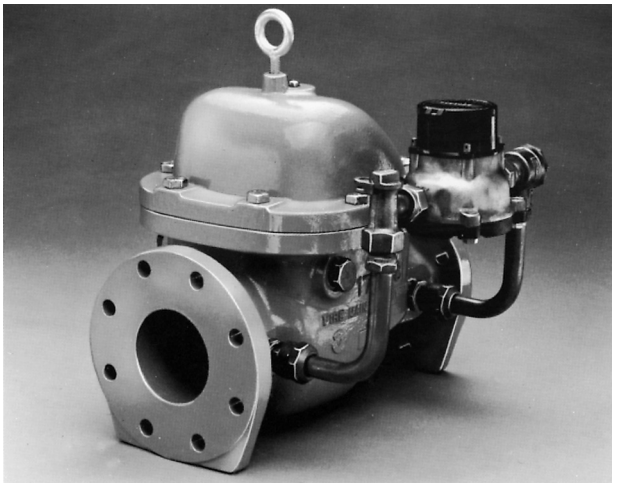

**FIGURE A.13.1(c) Detector Check Valve.**

**A.13.2.3** The valves are not required to be exposed. Doors, removable panels, or valve pits can be permitted to satisfy this requirement. Such equipment should not be obstructed by features such as walls, ducts, columns, direct burial, or stock storage.

**A.13.2.5** Main drains are installed on system risers for one principal reason: to drain water from the overhead piping after the system is shut off. This allows the contractor or plant maintenance department to perform work on the system or to replace nozzles after a fire or other incident involving system operation.

Data collected from the suction gauges during a fire pump flow test that test the water supply would satisfy the requirements for a main drain test.

These drains also are used to determine whether there is a major reduction in waterflow to the system, such as could be caused by a major obstruction, a dropped gate, a valve that is almost fully closed, or a check valve clapper stuck to the valve seat.

A satisfactory main drain test (i.e., one that reflects the results of previous tests) does not necessarily indicate an unobstructed passage, nor does it prove that all valves in the upstream flow of water are fully opened. However, these tests provide a reasonable level of confidence that the water supply has not been compromised.

The main drain test is conducted in the following manner:

(1) Record the pressure indicated by the supply water gauge.
(2) Close the alarm control valve on alarm valves.
(3) Fully open the main drain valve.
(4) After the flow has stabilized, record the residual (flowing) pressure indicated by the water supply gauge.
(5) Close the main drain valve slowly.

Copyright 2015 National Fire Protection Association (NFPA). Licensed, by agreement, for individual use and download on October 23, 2015 to VETERANS AFFAIRS. No other reproduction or transmission in any form permitted without written permission of NFPA. For inquires or to report unauthorized use, contact licensing@nfpa.org.



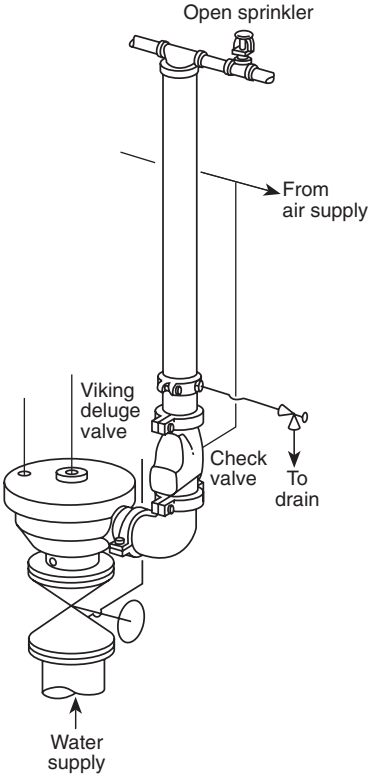


**FIGURE A.13.1(d) Deluge Valve.**

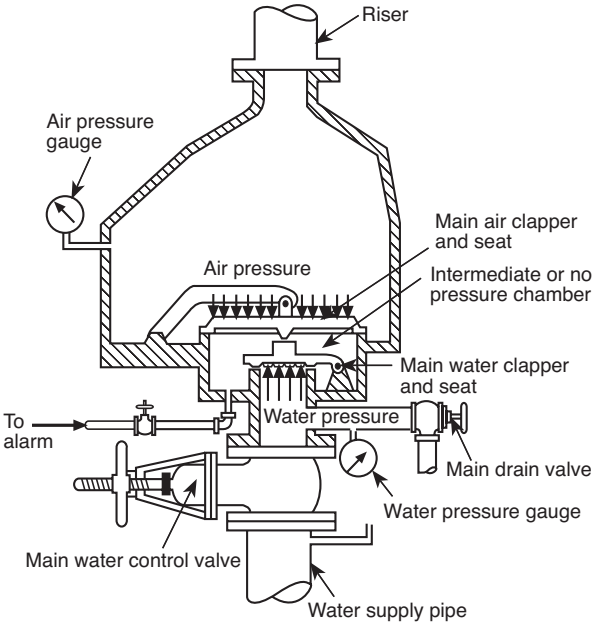


**FIGURE A.13.1(e) Dry Pipe Valve.**

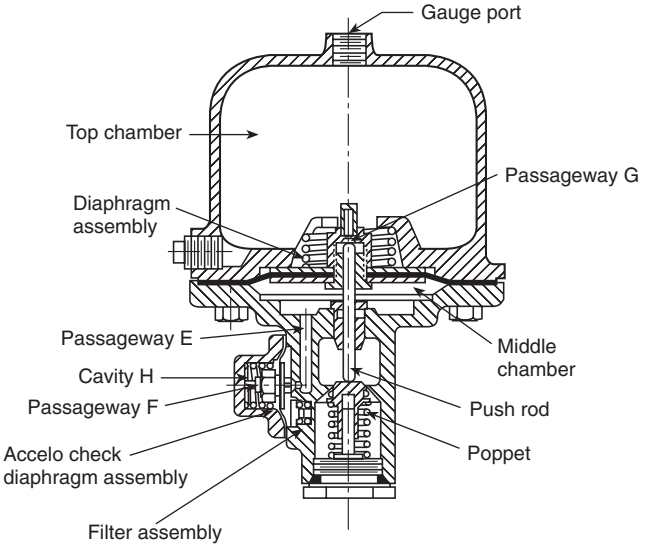


**FIGURE A.13.1(f) Dry Pipe System Accelerator.** *(Courtesy of The Reliable Automatic Sprinkler Co., Inc.)*

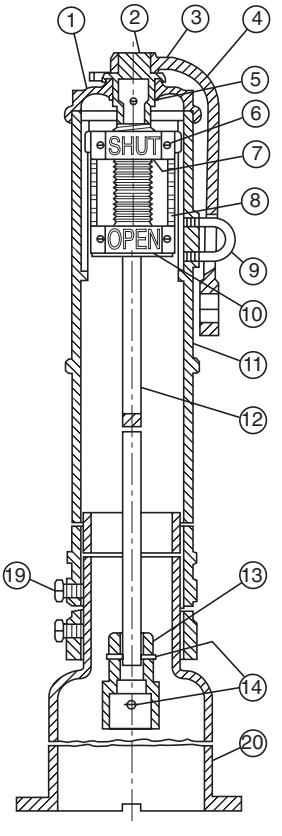


| Parts list | |
|---|---|
| No | Description |
| 1 | Cap |
| 2 | Operating stem |
| 3 | Operating stem oil hole screw |
| 4 | Operating wrench |
| 5 | Retaining ring |
| 6 | Target plate screw and nut |
| 7 | Target plate — shut |
| 8 | Target |
| 9 | Indicator post staple |
| 10 | Target plate — open |
| 11 | Indicator post |
| 12 | Extension rod — specify length |
| 13 | Extension rod coupling |
| 14 | Coupling pin |
| 15 | Window glass |
| 16 | Window frame |
| 17 | Window frame screw |
| 18 | Cap bolt and nut |
| 19 | Set screw |
| 20 | Sleeve bonnet |

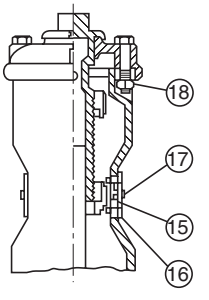

**FIGURE A.13.1(g) Vertical Indicator Post.**

Copyright 2015 National Fire Protection Association (NFPA). Licensed, by agreement, for individual use and download on October 23, 2015 to VETERANS AFFAIRS. No other reproduction or transmission in any form permitted without written permission of NFPA. For inquires or to report unauthorized use, contact licensing@nfpa.org.



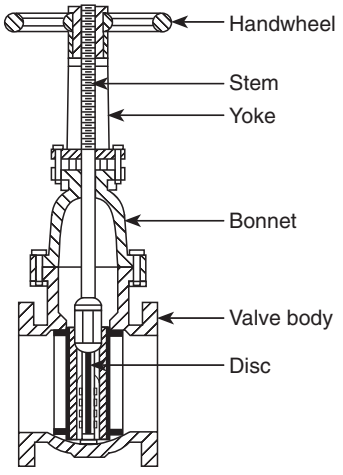


**FIGURE A.13.1(h) OS&Y Gate Valve.**

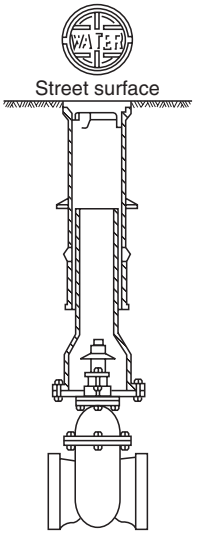


**FIGURE A.13.1(i) Nonindicating-Type Gate Valve.**

**A.13.3.1** Signs identifying underground fire service main control valves in roadway boxes should indicate the direction of valve opening, the distance and direction of the valve from the sign location (if the valve is subject to being covered by snow or ice), and the location of the wrench if not located with the sign.

**A.13.3.1.2** Valves that normally are closed during cold weather should be removed and replaced with devices that provide continuous fire protection service.

**A.13.3.2.2** Valves should be kept free of snow, ice, storage, or other obstructions so that access is ensured.

**A.13.3.2.2(2)** The purpose of the valve sealing program is as follows:

(1) The presence of a seal on a control valve is a deterrent to closing a valve indiscriminately without obtaining the proper authority.

(2) A broken or missing seal on a valve is cause for the plant inspector to verify that protection is not impaired and to notify superiors of the fact that a valve could have been closed without following procedures.

**A.13.3.3.2** A proper wrench needs to be used for this test. Using an improper wrench such as a pipe wrench has resulted in damage to the operating nut. The use of break over bars and extensions on the wrench can damage the valve and/or the post. If the valve cannot be closed and reopened using the proper wrench with reasonable force, then some maintenance and/or repairs are necessary so the valve can be operated when needed in a fire event. These "spring tests" are made to verify that a post indicator valve is fully open. If an operator feels the valve is fully open, he or she should push in the "open" direction. The handle usually moves a short distance (approximately a one-quarter turn) and "springs" back toward the operator in a subtle move when released. This spring occurs when the valve gate pulls up tight against the top of its casting and the valve shaft (being fairly long) twists slightly. The spring indicates that the valve is fully opened and that the gate is attached to the handle. If the gate is jammed due to a foreign particle, the handle is not likely to spring back. If the gate is loose from the handle, the handle continues to turn in the "open" direction with little resistance.

**A.13.3.3.5** For further information, see *NFPA 72, National Fire Alarm and Signaling Code.*

**A.13.4.1.1** A higher pressure reading on the system gauge is normal in variable pressure water supplies. Pressure over 175 psi (12.1 bar) can be caused by fire pump tests or thermal expansion and should be investigated and corrected.

**A.13.4.1.2** The system should be drained for internal inspection of valve components as follows:

(1) Close the control valve
(2) Open the main drain valve
(3) Open the inspector's test valve
(4) Wait for the sound of draining water to cease and for all gauges to indicate 0 psi (0 bar) before removing the handhole cover or dismantling any component

**A.13.4.3.2.1** High priming water levels can adversely affect the operation of supervisory air. Test the water level as follows:

(1) Open the priming level test valve.
(2) If water flows, drain it.
(3) Close the valve when water stops flowing and air discharges.
(4) If air discharges when the valve is opened, the priming water level could be too low. To add priming water, refer to the manufacturer's instructions.

**A.13.4.3.2.2** Preaction and deluge valves in areas subject to freezing should be trip tested in the spring to allow time before the onset of cold weather for all water that has entered the system or condensation to drain to low points or back to the valve.

**A.13.4.3.2.2.1** It is necessary that the full flow test incorporate the full functionality of the system, which would include any solenoid valves or other actuation devices. It was a common practice in the past to test the detection system or manual pull station up to the solenoid valve or actuator, and to separately test the deluge valve and system after the solenoid valve or actuator. The detectors on the system can be tested separately

Copyright 2015 National Fire Protection Association (NFPA). Licensed, by agreement, for individual use and download on October 23, 2015 to VETERANS AFFAIRS. No other reproduction or transmission in any form permitted without written permission of NFPA. For inquires or to report unauthorized use, contact licensing@nfpa.org.



as long as the functional test includes activation of the actuator or solenoid when it receives an actual or simulated signal.

**A.13.4.3.2.12** Methods of recording maintenance include tags attached at each riser, records retained at each building, and records retained at one building in a complex.

**A.13.4.3.3.3** Suitable facilities should be provided to dispose of drained water. Low points equipped with a single valve should be drained as follows:

(1) Open the low-point drain valve slowly
(2) Close the drain valve as soon as water ceases to discharge, and allow time for additional accumulation above the valve
(3) Repeat this procedure until water ceases to discharge
(4) Replace plug or nipple and cap as necessary

Low points equipped with dual valves should be drained as follows:

(1) Close the upper valve
(2) Open the lower valve, and drain the accumulated water
(3) Close the lower valve, open the upper valve, and allow time for additional water accumulation
(4) Repeat this procedure until water ceases to discharge
(5) Replace plug or nipple and cap in lower valve

Removing water from a preaction or deluge system is an essential part of a good maintenance program. Failure to keep these systems free of water can result in damage and expensive repairs to both the system and building. A program for monitoring the condition of the system and the operation of the auxiliary drains should be instituted. Auxiliary drains should be operated on a daily basis after a system operation until several days pass with no discharge of water from the drain valve. Thereafter, it might be possible to decrease the frequency to weekly or longer intervals depending on the volume of water discharged. Likewise, when preparing for cold weather, the auxiliary drains should be operated daily, with the frequency of operation decreasing depending on the discharge of accumulated water. In many cases, the frequency of the operation can decrease significantly if a system is shown to be dry.

**A.13.4.4.1.2.3** A conflict in pressure readings could indicate an obstructed orifice or a leak in the isolated chamber of the quick-opening device, either of which could make the quick-opening device inoperative.

**A.13.4.4.2.1** High priming water levels can affect the operation of supervisory air or nitrogen pressure maintenance devices. Test the water level as follows:

(1) Open the priming level test valve.
(2) If water flows, drain it.
(3) Close the valve when water stops flowing and air discharges.
(4) If air discharges when the valve is opened, the priming water level could be too low. To add priming water, refer to the manufacturer's instructions.

**A.13.4.4.2.2** Dry pipe valves should be trip tested in the spring to allow time before the onset of cold weather for all water that has entered the system or condensation to drain to low points or back to the valve.

**A.13.4.4.2.2.2** A full flow trip test generally requires at least two individuals, one of whom is situated at the dry pipe valve while the other is at the inspector's test. If possible, they should be in communication with each other. A full flow trip test is conducted as follows:

(1) The main drain valve is fully opened to clean any accumulated scale or foreign material from the supply water piping. The main drain valve then is closed.
(2) The system air or nitrogen pressure and the supply water pressure are recorded.
(3) The system air or nitrogen pressure is relieved by opening the inspector's test valve completely. Concurrent with opening the valve, both testers start their stopwatches. If two-way communication is not available, the tester at the dry valve is to react to the start of downward movement on the air pressure gauge.
(4) Testers at the dry pipe valve note the air pressure at which the valve trips and note the tripping time.
(5) Testers at the inspector's test note the time at which water flows steadily from the test connection. This time is noted for comparison purposes to previous tests and is not meant to be a specific pass/fail criterion. Note that NFPA 13, *Standard for the Installation of Sprinkler Systems*, does not require water delivery in 60 seconds for all systems.
(6) When clean water flows, the test is terminated by closing the system control valve.
(7) The air or nitrogen pressure and the time elapsed are to be recorded as follows:
    (a) From the complete opening of the test valve to the tripping of the valve
    (b) From the complete opening of inspector's valve to the start of steady flow from the test connection
(8) All low-point drains are opened and then closed when water ceases to flow.
(9) The dry pipe valve and quick-opening device are reset, if installed, in accordance with the manufacturer's instructions, and the system is returned to service.

For dry pipe systems that were designed and installed using either a manual demonstration or a computer calculation to simulate multiple openings to predict water delivery time, a full flow trip test from a single inspector's test connection should have been conducted during the original system acceptance and a full flow trip test from the single inspector's test should continue to be conducted every 3 years. The system is not required to achieve water delivery to the inspector's test connection in 60 seconds, but comparison to the water delivery time during the original acceptance will determine if there is a problem with the system.

**A.13.4.4.2.2.3** A partial flow trip test is conducted in the following manner:

(1) Fully open the main drain valve to clean any accumulated scale or foreign material from the supply water piping
(2) Close the control valve to the point where additional closure cannot provide flow through the entire area of the drain outlet
(3) Close the valve controlling flow to the device if a quick-opening device is installed
(4) Record the system air or nitrogen pressure and the supply water pressure
(5) Relieve system air or nitrogen pressure by opening the priming level test valve
(6) Note and record the air or nitrogen pressure and supply water pressure when the dry pipe valve trips

Copyright 2015 National Fire Protection Association (NFPA). Licensed, by agreement, for individual use and download on October 23, 2015 to VETERANS AFFAIRS. No other reproduction or transmission in any form permitted without written permission of NFPA. For inquires or to report unauthorized use, contact licensing@nfpa.org.



(7) Immediately close the system control valve and open the main drain valve to minimize the amount of water entering the system piping
(8) Trip test the quick-opening device, if installed, in accordance with the manufacturer's instructions
(9) Open all low point drains and close when water ceases to flow
(10) Reset the dry pipe valve and quick-opening device, if installed, in accordance with the manufacturer's instructions and return the system to service

**CAUTION:** A partial flow trip test does not provide a high enough rate of flow to latch the clappers of some model dry pipe valves in the open position. When resetting such valves, check that the latching equipment is operative.

**A.13.4.4.2.4** Except when a full flow trip test is conducted in accordance with A.13.4.4.2.2.2, a quick-opening device should be tested in the following manner:

(1) Close the system control valve
(2) Open the main drain valve, and keep it in the open position
(3) Verify that the quick-opening device control valve is open
(4) Open the inspector's test valve. (Note that a burst of air from the device indicates that it has tripped)
(5) Close the device's control valve
(6) Return the device to service in accordance with the manufacturer's instructions and return the system to service

**A.13.4.4.3.2** Removing water from a dry system is an essential part of a good maintenance program. Failure to keep the dry system free of water can result in damage and expensive repairs to both the system and building. A program for monitoring the condition of the system and the operation of the auxiliary drains should be instituted. Auxiliary drains should be operated on a daily basis after a dry sprinkler system operation until several days pass with no discharge of water from the drain valve. Thereafter, it might be possible to decrease the frequency to weekly or longer intervals depending on the volume of water discharged. Likewise, when preparing for cold weather, the auxiliary drains should be operated daily with the frequency of operation decreasing depending on the discharge of accumulated water. In many cases, the frequency of the operation can decrease significantly if a system is shown to be dry. A quick-opening device, if installed, should be removed temporarily from service prior to draining low points.

**A.13.5.1.2** The sectional drain valve should be opened to compare the results with the original installation or acceptance tests.

**A.13.5.2.2** PRV devices can be bench tested in accordance with the manufacturer's instructions or tested in place. To test in place, a gauge is connected on both the inlet side and the outlet side of the device, and flow readings are taken using a Pitot tube or a flowmeter. Water is discharged through a roof manifold, if available, or through hose to the exterior of the building. Another acceptable method for systems having at least two risers is to take one standpipe out of service and use it as a drain by removing PRV devices and attaching hoses at the outlets near the ground floor level. When testing in this manner, a flowmeter should be used and a hose line utilized to connect the riser being tested and the drain riser.

Readings are to be compared to the system's hydraulic demands at the test location. Field-adjustable valves are to be reset in accordance with manufacturer's instructions. Nonadjustable valves should be replaced. Extreme caution should be exercised because of the high pressure involved when testing.

**A.13.5.4.1** When the PRV is located in or immediately downstream of the fire pump discharge, the weekly inspection of the master PRV can be performed during the weekly fire pump operating test.

**A.13.5.4.1(1)** Pressures downstream of the master PRV should not exceed the maximum pressure rating of the system components.

**A.13.5.4.2** The partial flow test of the master PRV can be performed during the quarterly main drain test. *(See 13.2.5.2.)*

**A.13.5.4.3** When the PRV is located in the fire pump discharge, the full flow test of the master PRV can be performed during the annual fire pump flow test.

**A.13.5.6.2.1** Hose valves can be tested without a full flow if the cap is left on the hose threads. The purpose of this requirement is to exercise the valve so it can be operated easily.

**A.13.5.6.2.2** See A.13.5.6.2.1.

**A.13.6.1.2.2** Intermittent discharge from a differential-sensing valve relief port is normal. Continuous discharge is a sign of malfunction of either or both of the check valves, and maintenance is necessary.

**A.13.6.1.4** Where annual maintenance includes an internal inspection performed by a qualified person, this requirement is satisfied.

**A.13.6.2.1** The full flow test of the backflow prevention valve can be performed with a test header or other connections downstream of the valve. A bypass around the check valve in the fire department connection line with a control valve in the normally closed position can be an acceptable arrangement. When flow to a visible drain cannot be accomplished, closed loop flow can be acceptable if a flowmeter or sight glass is incorporated into the system to ensure flow.

**A.13.7.1(9)** It is not the intent of this section for all fire department connection piping to be inspected for obstructions but only the interior of the connection itself.

**A.13.8.3** Design review is outside the scope of this standard.

**A.14.1** For obstruction investigation and prevention, see Annex D.

**A.14.2.1** It is the intent of this requirement to provide a reasonable assurance that corrosion and obstruction issues within fire protection systems are identified. It is not the intent to require verification that every piece of pipe in the system is free from corrosion and obstructions. An assessment of the internal condition of piping can be accomplished by several methods that meet the intent of this section. These methods include the following:

(1) Opening a flushing connection at the end of one main, and removing the end fitting or piece of branch line or a sprinkler for the purpose of inspecting for the presence of foreign organic and inorganic material.
  (a) In dry pipe systems and preaction systems, the branch line inspected should be the most remote one from the source of water that is not equipped with the inspector's test valve.
  (b) When performing normal maintenance that involves draining down a system to modify a system such as for tenant fit out or building renovations, or when removing or replacing piping, this inspection can be performed as described and properly recorded at

Copyright 2015 National Fire Protection Association (NFPA). Licensed, by agreement, for individual use and download on October 23, 2015 to VETERANS AFFAIRS. No other reproduction or transmission in any form permitted without written permission of NFPA. For inquires or to report unauthorized use, contact licensing@nfpa.org.



that time. The time interval would then start for the next assessment of that system at the frequency determined by 14.2.1.1 or 14.2.1.2.

(c) If a sprinkler is removed to perform this inspection, 5.4.1.1 requires a new sprinkler matching the characteristics of the replaced sprinkler.

(2) Utilizing alternative examination methods such as the following:

(a) Using video inspection equipment that is inserted into the system at strategic points to observe the internal condition of pipes. This equipment provides a visual exam of the pipes using a camera and lighting system on the end of a push cable. Video inspection equipment can be inserted in alarm, dry, and preaction valves for a look into risers, feed mains, some cross mains, and some branch lines, depending on the system configuration. The push cable can also be inserted in a check valve when performing the five-year internal inspection required by 13.4.2.1 to view additional areas of a system, and in the fire department connection to perform the interior inspection required by 13.7.2.

(b) Ultrasonic or similar technology that allows the pipe wall to be tested to determine the extent of any deterioration due to microbiologically influenced corrosion (MIC) or other forms of corrosion. This method would not typically be used for the internal inspection of piping required by this section because it might not detect the presence of solid material in the piping, such as wood, plastic, or other foreign obstructions, that are not a by-product of corrosion, because only small representative sections of pipe are examined.

(c) A laboratory analysis of water samples obtained from the fire protection system, combined with collecting and inspecting solid material from fire protection system water discharged from a main drain, and an inspector's test connection, can provide an indication of the presence of corrosion, MIC, and/or foreign materials. If a high level of MIC is identified, or if a significant amount of foreign materials is found, further investigation might be warranted to verify the extent of corrosion, MIC, or other obstructions in the system. The solid materials should be collected with an appropriately sized strainer. If inspection of the solid materials identifies excessive rust, black water color, or sulfur (rotten egg) odors, an obstruction investigation as described in Section 14.3 is warranted.

**A.14.2.1.2** The purpose of the assessment of the internal condition of piping is to identify whether foreign organic and inorganic material is present, since the presence of such material can potentially be detrimental to the performance of the sprinkler system. Corrosion, which includes microbiologically influenced corrosion (MIC), can be prevalent in sprinkler piping, but not necessarily in all systems, buildings, or geographic locations. Therefore, the risk analysis should be based upon evidence noted and/or data obtained from proximate sprinkler systems, known problems from the water supply, as well as other factors that could affect the integrity of the system piping. The decision of when, how often, and which method to use to conduct an assessment should also consider the risk of emptying and refilling the sprinkler system with water, which could adversely impact the sprinkler system by introducing foreign or inorganic material into the sprinkler system.

**A.14.2.1.4** Most piping systems contain some foreign material or other evidence of corrosion but not sufficient to trigger an obstruction investigation. Furthermore, an internal inspection is primarily an inspection for determining corrosion of the pipe, but it can result in finding the presence of material that would be an obstruction to piping or sprinklers. If such is found, an obstruction investigation in Section 14.3 would be required.

**A.14.2.2** In large warehouses, high-rise buildings, and other buildings having multiple systems, it is reasonable to perform the assessment on half of the systems, and conclude that these are representative of all systems in the building. The systems in the building not assessed during one frequency cycle should be assessed during the next one. As long as there is no evidence of any foreign organic and/or inorganic material found in any of the systems being assessed, every other system would be assessed once every frequency cycle. However, if foreign organic and/or inorganic material is found in any system in the building during the frequency cycle, all systems must would then be assessed during that frequency cycle.

**A.14.3.1** Most piping systems contain some foreign material or other evidence of corrosion but not sufficient to trigger an obstruction investigation. Furthermore, an internal inspection is primarily an inspection for determining corrosion of the pipe, but it can result in finding the presence of material that would be an obstruction to piping or sprinklers. If such is found, an obstruction investigation in Section 14.3 would be required. For obstruction investigation procedures, see Section D.3. The type of obstruction investigation should be appropriately selected based on the observed condition. For instance, ordering an internal obstruction investigation would be inappropriate where the observed condition was broken public mains in the vicinity. On the other hand, such an investigation would be appropriate where foreign materials are observed in the dry pipe valve.

**A.14.3.2** For obstruction prevention program recommendations, see Section D.4.

**A.14.3.2.2** The indicated locations are presented as the minimum basis for determining the need for the initiation of a more extensive obstruction investigation effort. Additional points of examination can be appropriately dictated to assess the extent and severity of the obstructing material as determined by the observed conditions at these locations. See Section D.3 for further discussion.

**A.14.3.2.3** Alternative examination methods can include the following:

(1) Using video inspection equipment that is inserted into the system at strategic points to observe the internal condition of pipes. This equipment provides a visual exam of the pipes using a camera and lighting system on the end of a push cable. Video inspection equipment can be inserted in alarm, dry, and preaction valves, in the risers, and into cross mains and branch lines, depending on the system configuration. This equipment can also be used to determine the results of any flushing that was performed.

(2) Ultrasonic or similar technology that allows the pipe wall to be externally tested to determine the extent of any deterioration due to MIC or other forms of corrosion. This method has advantages including allowing the system to be left in service while performing the examination, and pinpointing where pipes are about to fail before the actual failure occurs, allowing preventive action to be taken.

Copyright 2015 National Fire Protection Association (NFPA). Licensed, by agreement, for individual use and download on October 23, 2015 to VETERANS AFFAIRS. No other reproduction or transmission in any form permitted without written permission of NFPA. For inquires or to report unauthorized use, contact licensing@nfpa.org.



This technology does have its limitations, and to be thorough all pipes would require access, even those in concealed spaces such as those above ceilings. This technology can detect the presence of a buildup of sludge, scale, or other by-products of corrosion, and can detect existing air pockets in wet systems as well as trapped sections of pipe in dry systems that aren't adequately drained. This technology cannot detect the presence of MIC itself, but can detect tubercules caused by MIC. In most cases this technology will not detect the presence of solid material in the piping such as wood, plastic, or other foreign obstructions that are not a by-product of corrosion, because only small representative sections of pipe are examined.

**A.14.3.3** For obstruction investigation flushing procedures, see Section D.5.

**A.15.3.1** A clearly visible tag alerts building occupants and the fire department that all or part of the water-based fire protection system is out of service. The tag should be weather resistant, plainly visible, and of sufficient size [typically 4 in. × 6 in. (100 mm × 150 mm)]. The tag should identify which system is impaired, the date and time impairment began, and the person responsible. Figure A.15.3.1 illustrates a typical impairment tag.

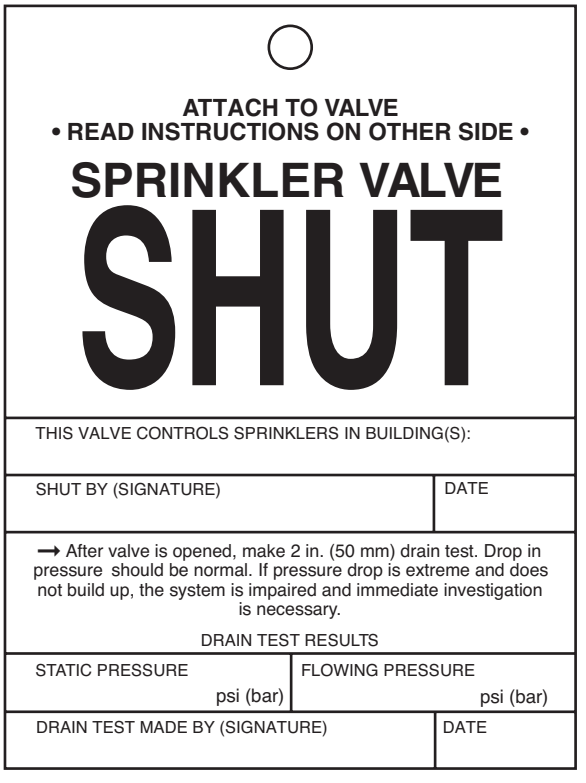


**FIGURE A.15.3.1 Sample Impairment Tag.**

**A.15.3.2** An impairment tag should be placed on the fire department connection to alert responding fire fighters of an abnormal condition. An impairment tag that is located on the system riser only could go unnoticed for an extended period if fire fighters encounter difficulty in gaining access to the building or sprinkler control room.

**A.15.5** The need for temporary fire protection, termination of all hazardous operations, and frequency of inspections in the areas involved should be determined. All work possible should be done in advance to minimize the length of the impairment. Where possible, temporary feedlines should be used to maintain portions of systems while work is completed.

Water-based fire protection systems should not be removed from service when the building is not in use. Where a system that has been out of service for a prolonged period, such as in the case of idle or vacant properties, is returned to service, qualified personnel should be retained to inspect and test the systems.

**A.15.5.2(4)(b)** A fire watch should consist of trained personnel who continuously patrol the affected area. Ready access to fire extinguishers and the ability to promptly notify the fire department are important items to consider. During the patrol of the area, the person should not only be looking for fire, but making sure that the other fire protection features of the building such as egress routes and alarm systems are available and functioning properly.

**A.15.5.2(4)(c)** Temporary water supplies are possible from a number of sources, including use of a large-diameter hose from a fire hydrant to a fire department connection, use of a portable tank and a portable pump, or use of a standby fire department pumper and/or tanker.

**A.15.5.2(4)(d)** Depending on the use and occupancy of the building, it could be enough in some circumstances to stop certain processes in the building or to cut off the flow of fuel to some machines. It is also helpful to implement "No Smoking" and "No Hot Work" (cutting, grinding, or welding) policies while the system is out of service because these activities are responsible for many fire ignitions.

**A.15.6** Emergency impairments include, but are not limited to, system leakage, interruption of water supply, frozen or ruptured piping, equipment failure, or other impairments found during inspection, testing, or maintenance activities.

**A.15.6.2** When one or more impairments are discovered during inspection, testing, and maintenance activities, the owner or owner's authorized representative should be notified in writing. See Figure A.15.6.2 for an example of written notification.

**A.15.7** Occasionally, fire protection systems in idle or vacant buildings are shut off and drained. When the equipment is eventually restored to service after a long period of not being maintained, it is recommended that qualified personnel or a qualified contractor perform the work. The following is an example of a procedure:

(1) All piping should be traced from the extremities of the system to the main connections with a careful check for blank gaskets in flanges, closed valves, corroded or damaged sprinklers, nozzles, or piping, insecure or missing hangers, and insufficient support. Proper repairs or adjustments should be made, and needed extensions or alterations for the equipment should be completed.
(2) An air test at low pressure (40 psi) should be conducted prior to allowing water to fill the system. When the piping has been proven tight by passing the air test, water can be introduced slowly into the system, with proper precautions against damage by escape of water from previously undiscovered defects. When the system has been filled under normal service pressure, drain valve tests should be

Copyright 2015 National Fire Protection Association (NFPA). Licensed, by agreement, for individual use and download on October 23, 2015 to VETERANS AFFAIRS. No other reproduction or transmission in any form permitted without written permission of NFPA. For inquires or to report unauthorized use, contact licensing@nfpa.org.



**IMPAIRMENT NOTICE**

DURING A RECENT INSPECTION OF YOUR FIRE PROTECTION SYSTEM(S), AN ***EMERGENCY IMPAIRMENT*** WAS DISCOVERED AND INDICATED ON THE INSPECTION REPORT. AS DEFINED BY NFPA 25, AN ***EMERGENCY IMPAIRMENT*** IS "A CONDITION WHERE A WATER-BASED FIRE PROTECTION SYSTEM OR PORTION THEREOF IS OUT OF ORDER DUE TO AN UNEXPECTED OCCURRENCE, SUCH AS A RUPTURED PIPE, OPERATED SPRINKLER, OR AN INTERRUPTION OF WATER SUPPLY TO THE SYSTEM." NFPA 25 FURTHER STATES, "EMERGENCY IMPAIRMENTS INCLUDE BUT ARE NOT LIMITED TO SYSTEM LEAKAGE, INTERRUPTION OF WATER SUPPLY, FROZEN OR RUPTURED PIPING, AND EQUIPMENT FAILURE."

WE RECOMMEND THAT IMMEDIATE STEPS BE TAKEN, AS DESCRIBED IN THE ATTACHED COPY OF CHAPTER 15 OF NFPA 25, TO CORRECT THE FOLLOWING IMPAIRMENT(S) TO YOUR FIRE PROTECTION SYSTEM(S):

- ❑ CONTROL VALVE SHUT. SYSTEM OUT OF SERVICE.
- ❑ LOW WATER PRESSURE DURING FLOW TEST. POSSIBLE OBSTRUCTION IN WATER SUPPLY OR PARTIALLY SHUT VALVE.
- ❑ PIPE(S) FROZEN.
- ❑ PIPE(S) LEAKING.
- ❑ PIPE(S) ARE OBSTRUCTED.
- ❑ SYSTEM PIPING OR PORTIONS OF SYSTEM PIPING ARE DISCONNECTED.
- ❑ FIRE DEPT. CONNECTION MISSING OR DAMAGED OR OBSTRUCTED.
- ❑ DRY PIPE VALVE CANNOT BE RESET.
- ❑ DRY PIPE SYSTEM QUICK-OPENING DEVICE IS OUT OF SERVICE.
- ❑ SPRINKLERS ARE PAINTED, CORRODED, DAMAGED, OR LOADED.
- ❑ FIRE PUMP IS OUT OF SERVICE.
- ❑ DETECTION/ACTUATION SYSTEM IS OUT OF SERVICE.
- ❑ OTHER:_____

**FIGURE A.15.6.2 Sample Impairment Notice.**

made to detect any closed valve that possibly could have been overlooked. All available pipes should be flushed, and an obstruction investigation completed to make sure that the system is clear of debris.

(3) Where the system was known to have been damaged by freezing or where other extensive damage might have occurred, a full hydrostatic test can be performed in accordance with NFPA 13 to determine whether the system integrity has been maintained.

(4) Dry pipe valves, quick-opening devices, alarm valves, and all alarm connections should be examined, put in proper condition, and tested.

(5) Fire pumps, pressure and gravity tanks, reservoirs, and other water supply equipment should receive proper attention before being placed in service. Each supply should be tested separately and then together if they are designed to work together.

(6) All control valves should be operated from the closed to fully open position and should be left sealed, locked, or equipped with a tamper switch.

**A.16.1.1.1** There are numerous NFPA documents that have special requirements for the inspection, testing, and maintenance of water-based fire protection systems that are different from those in NFPA 25. In many cases those documents reference NFPA 25 and could have either more stringent or even less stringent requirements than those in NFPA 25.

**A.16.1.1.2** These requirements are not written by or able to be amended by the technical committee of this standard, and therefore the text is an extract from the document that has the requirements.

## Annex B Forms for Inspection, Testing, and Maintenance

*This annex is not a part of the requirements of this NFPA document but is included for informational purposes only.*

**B.1 General.** Forms need to be complete with respect to the requirements of NFPA 25 for the system being inspected, tested, or maintained, or any combination thereof. Because water-based fire protection systems are comprised of many components, it could be necessary to complete more than one form for each system.

Authorities having jurisdiction are legitimately concerned that the forms used are comprehensive. Therefore, they could develop their own forms or utilize those already developed and reviewed by their jurisdiction.

At least five formats can be used and are described as follows:

(1) One form in which all requirements for NFPA 25 are specified and large sections of information do not apply to most systems

(2) Individual forms that provide requirements corresponding to each chapter of NFPA 25 and address the following:
   (a) Sprinkler systems
   (b) Standpipe systems
   (c) Private fire service mains
   (d) Fire pumps
   (e) Storage tanks
   (f) Water spray systems
   (g) Foam-water sprinkler systems

(3) Forms that include information from the specific system chapter: Chapter 1, Chapter 13, and Chapter 14

(4) A series of forms similar to option (2) but with a more detailed breakdown of system types. For example, fire sprinkler systems are divided into five separate forms such as:
   (a) Wet pipe fire sprinkler systems
   (b) Dry pipe fire sprinkler systems
   (c) Preaction fire sprinkler systems
   (d) Deluge fire sprinkler systems
   (e) Foam-water sprinkler systems

(5) Separate forms for each individual component of each fire protection system

**B.2 Sample Forms.** Sample forms are available for downloading at www.nfpa.org, www.nfsa.org, and www.sprinklernet.org.

## Annex C Possible Causes of Pump Troubles

*This annex is not a part of the requirements of this NFPA document but is included for informational purposes only.*

This annex is extracted from NFPA 20, *Standard for the Installation of Stationary Pumps for Fire Protection.*

**C.1 Causes of Pump Troubles.** This annex contains a partial guide for locating pump troubles and their possible causes *(see Figure C.1)*. It also contains a partial list of suggested remedies. *(For other information on this subject, see Hydraulic Institute Stan-*

Copyright 2015 National Fire Protection Association (NFPA). Licensed, by agreement, for individual use and download on October 23, 2015 to VETERANS AFFAIRS. No other reproduction or transmission in any form permitted without written permission of NFPA. For inquires or to report unauthorized use, contact licensing@nfpa.org.



*dard for Centrifugal, Rotary and Reciprocating Pumps.)* The causes listed here are in addition to possible mechanical breakage that would be obvious on visual inspection. In case of trouble, it is suggested that those troubles that can be inspected easily should be corrected first or eliminated as possibilities.

**C.1.1 Air Drawn into Suction Connection Through Leak(s).** Air drawn into suction line through leaks causes a pump to lose suction or fail to maintain its discharge pressure. Uncover suction pipe and locate and repair leak(s).

**C.1.2 Suction Connection Obstructed.** Examine suction intake, screen, and suction pipe and remove obstruction. Repair or provide screens to prevent recurrence.

**C.1.3 Air Pocket in Suction Pipe.** Air pockets cause a reduction in delivery and pressure similar to an obstructed pipe. Uncover suction pipe and rearrange to eliminate pocket.

**C.1.4 Well Collapsed or Serious Misalignment.** Consult a reliable well drilling company and the pump manufacturer regarding recommended repairs.

**C.1.5 Stuffing Box Too Tight or Packing Improperly Installed, Worn, Defective, Too Tight, or of Incorrect Type.** Loosen gland swing bolts and remove stuffing box gland halves. Replace packing.

**C.1.6 Water Seal or Pipe to Seal Obstructed.** Loosen gland swing bolt and remove stuffing box gland halves along with the water seal ring and packing. Clean the water passage to and in the water seal ring. Replace water seal ring, packing gland, and packing in accordance with manufacturer's instructions.

**C.1.7 Air Leak into Pump Through Stuffing Boxes.** Same as possible cause in C.1.6.

| | Suction | | | | Pump | | | | | | | | | | | | | | | | Driver and/or Pump | | | | | Driver | | | | | | |
|---|---|---|---|---|---|---|---|---|---|---|---|---|---|---|---|---|---|---|---|---|---|---|---|---|---|---|---|---|---|---|---|---|
| **Fire pump troubles** | Air drawn into suction connection through leak(s) | Suction connection obstructed | Air pocket in suction pipe | Well collapsed or serious misalignment | Stuffing box too tight or packing improperly installed, worn, defective, too tight, or incorrect type | Water seal or pipe to seal obstructed | Air leak into pump through stuffing boxes | Impeller obstructed | Wearing rings worn | Impeller damaged | Wrong diameter impeller | Actual net head lower than rated | Casing gasket defective, permitting internal leakage (single-stage and multistage pumps) | Pressure gauge is on top of pump casing | Incorrect impeller adjustment (vertical shaft turbine-type pump only) | Impellers locked | Pump is frozen | Pump shaft or shaft sleeve scored, bent, or worn | Pump not primed | Seal ring improperly located in stuffing box, preventing water from entering space to form seal | Excess bearing friction due to lack of lubrication, wear, dirt, rusting, failure, or improper installation | Rotating element binds against stationary element | Pump and driver misaligned | Foundation not rigid | Engine-cooling system obstructed | Faulty driver | Lack of lubrication | Speed too low | Wrong direction of rotation | Speed too high | Rated motor voltage different from line voltage | Faulty electrical circuit, obstructed fuel system obstructed steam pipe, or dead battery |
| | 1 | 2 | 3 | 4 | 5 | 6 | 7 | 8 | 9 | 10 | 11 | 12 | 13 | 14 | 15 | 16 | 17 | 18 | 19 | 20 | 21 | 22 | 23 | 24 | 25 | 26 | 27 | 28 | 29 | 30 | 31 | 32 |
| Excessive leakage at stuffing box | | | | | X | | | | | | | | | | | | | X | | | | | X | | | | | | | | | |
| Pump or driver overheats | | | | X | X | X | | X | | | X | | | | X | | | X | X | X | X | X | X | X | X | | X | | X | X | X | |
| Pump unit will not start | | | | X | X | | | | | | | | | | X | X | X | | | | X | | | | | X | X | | | | | X |
| No water discharge | X | X | X | | | | | X | | | | | | | | | | | X | | | | | | | | | | | | | |
| Pump is noisy or vibrates | | | | X | X | | | X | | X | | | | | | | | X | | | X | X | X | X | | | X | | | | | |
| Too much power required | | | | X | X | | | X | X | | X | | X | | X | | | X | | | X | X | X | X | | | X | | X | X | X | |
| Discharge pressure not constant for same gpm | X | | | | X | X | X | | | | | | | | | | | | | | | | | | | | | | | | | |
| Pump loses suction after starting | X | X | X | | | X | X | | | | | | | | | | | | | X | | | | | | | | | | | | |
| Insufficient water discharge | X | X | X | | | X | X | X | X | X | X | X | X | | X | | | | | | | | | | | | | X | X | | X | |
| Discharge pressure too low for gpm discharge | X | X | X | | X | X | X | X | X | X | X | X | X | X | | | | | | | | | | | | | | X | X | | X | |

**FIGURE C.1 Possible Causes of Fire Pump Troubles.**

Copyright 2015 National Fire Protection Association (NFPA). Licensed, by agreement, for individual use and download on October 23, 2015 to VETERANS AFFAIRS. No other reproduction or transmission in any form permitted without written permission of NFPA. For inquires or to report unauthorized use, contact licensing@nfpa.org.



**C.1.8 Impeller Obstructed.** Does not show on any one instrument, but pressures fall off rapidly when an attempt is made to draw a large amount of water.

For horizontal split-case pumps, remove upper case of pump and remove obstruction from impeller. Repair or provide screens on suction intake to prevent recurrence.

For vertical shaft turbine-type pumps, lift out column pipe and pump bowls from wet pit or well and disassemble pump bowl to remove obstruction from impeller.

For close-coupled, vertical in-line pumps, lift motor on top pull-out design and remove obstruction from impeller.

**C.1.9 Wearing Rings Worn.** Remove upper case and insert feeler gauge between case wearing ring and impeller wearing ring. Clearance when new is 0.0075 in. (0.19 mm). Clearances of more than 0.015 in. (0.38 mm) are excessive.

**C.1.10 Impeller Damaged.** Make minor repairs or return to manufacturer for replacement. If defect is not too serious, order new impeller and use damaged one until replacement arrives.

**C.1.11 Wrong Diameter Impeller.** Replace with impeller of proper diameter.

**C.1.12 Actual Net Head Lower Than Rated.** Check impeller diameter and number and pump model number to make sure correct head curve is being used.

**C.1.13 Casing Gasket Defective, Permitting Internal Leakage (Single-Stage and Multistage Pumps).** Replace defective gasket. Check manufacturer's drawing to see whether gasket is required.

**C.1.14 Pressure Gauge Is on Top of Pump Casing.** Place gauges in correct location.

**C.1.15 Incorrect Impeller Adjustment (Vertical Shaft Turbine-Type Pump Only).** Adjust impellers according to manufacturer's instructions.

**C.1.16 Impellers Locked.** For vertical shaft turbine-type pumps, raise and lower impellers by the top shaft adjusting nut. If this adjustment is not successful, follow the manufacturer's instructions.

For horizontal split-case pumps, remove upper case and locate and eliminate obstruction.

**C.1.17 Pump Is Frozen.** Provide heat in the pump room. Disassemble pump and remove ice as necessary. Examine parts carefully for damage.

**C.1.18 Pump Shaft or Shaft Sleeve Scored, Bent, or Worn.** Replace shaft or shaft sleeve.

**C.1.19 Pump Not Primed.** If a pump is operated without water in its casing, the wearing rings are likely to seize. The first warning is a change in pitch of the sound of the driver. Shut down the pump.

For vertical shaft turbine-type pumps, check water level to determine whether pump bowls have proper submergence.

**C.1.20 Seal Ring Improperly Located in Stuffing Box, Preventing Water from Entering Space to Form Seal.** Loosen gland swing bolt and remove stuffing box gland halves along with the water-seal ring and packing. Replace, putting seal ring in proper location.

**C.1.21 Excess Bearing Friction Due to Lack of Lubrication, Wear, Dirt, Rusting, Failure, or Improper Installation.** Remove bearings and clean, lubricate, or replace as necessary.

**C.1.22 Rotating Element Binds Against Stationary Element.** Inspect clearances and lubrication and replace or repair the defective part.

**C.1.23 Pump and Driver Misaligned.** Shaft running off center because of worn bearings or misalignment. Align pump and driver according to manufacturer's instructions. Replace bearings according to manufacturer's instructions.

**C.1.24 Foundation Not Rigid.** Tighten foundation bolts or replace foundation if necessary.

**C.1.25 Engine-Cooling System Obstructed.** Heat exchanger or cooling water systems too small. Cooling pump faulty. Remove thermostats. Open bypass around regulator valve and strainer. Inspect regulator valve operation. Inspect strainer. Clean and repair if necessary. Disconnect sections of cooling system to locate and remove possible obstruction. Adjust engine-cooling water-circulating pump belt to obtain proper speed without binding. Lubricate bearings of this pump.

If overheating still occurs at loads up to 150 percent of rated capacity, contact pump or engine manufacturer so that necessary steps can be taken to eliminate overheating.

**C.1.26 Faulty Driver.** Inspect electric motor, internal combustion engine, or steam turbine, in accordance with manufacturer's instructions, to locate reason for failure to start.

**C.1.27 Lack of Lubrication.** If parts have seized, replace damaged parts and provide proper lubrication. If not, stop pump and provide proper lubrication.

**C.1.28 Speed Too Low.** For electric motor drive, confirm that rated motor speed corresponds to rated speed of pump, voltage is correct, and starting equipment is operating properly.

Low frequency and low voltage in the electric power supply prevent a motor from running at rated speed. Low voltage can be due to excessive loads and inadequate feeder capacity or (with private generating plants) low generator voltage. The generator voltage of private generating plants can be corrected by changing the field excitation. When low voltage is from the other causes mentioned, it can be necessary to replace transformer taps or increase feeder capacity.

Low frequency usually occurs with a private generating plant and should be corrected at the source. Low speed can result in older type squirrel-cage-type motors if fastenings of copper bars to end rings become loose. The remedy is to weld or braze these joints.

For steam turbine drive, confirm that valves in steam supply pipe are wide open; boiler steam pressure is adequate; steam pressure is adequate at the turbine; strainer in the steam supply pipe is not plugged; steam supply pipe is of adequate size; condensate is removed from steam supply pipe, trap, and turbine; turbine nozzles are not plugged; and setting of speed and emergency governor is correct.

For internal combustion engine drive, confirm that setting of speed governor is correct; hand throttle is opened wide; and there are no mechanical defects such as sticking valves, timing off, or spark plugs fouled, and so forth. The latter can require the services of a trained mechanic.

**C.1.29 Wrong Direction of Rotation.** Instances of an impeller turning backward are rare but are clearly recognizable by the extreme deficiency of pump delivery. Wrong direction of rotation can be determined by comparing the direction in which the flexible coupling is turning with the directional arrow on the pump casing.

Copyright 2015 National Fire Protection Association (NFPA). Licensed, by agreement, for individual use and download on October 23, 2015 to VETERANS AFFAIRS. No other reproduction or transmission in any form permitted without written permission of NFPA. For inquires or to report unauthorized use, contact licensing@nfpa.org.



With polyphase electric motor drive, two wires must be reversed; with dc driver, the armature connections must be reversed with respect to the field connections. Where two sources of electrical current are available, the direction of rotation produced by each should be inspected.

**C.1.30 Speed Too High.** See that pump- and driver-rated speed correspond. Replace electric motor with one of correct rated speed. Set governors of variable-speed drivers for correct speed. Frequency at private generating stations can be too high.

**C.1.31 Rated Motor Voltage Different from Line Voltage.** For example, a 220 or 440 V motor on 208 or 416 V line. Obtain motor of correct rated voltage or a larger size motor.

**C.1.32 Faulty Electric Circuit, Obstructed Fuel System, Obstructed Steam Pipe, or Dead Battery.** Inspect for break in wiring open switch, open circuit breaker, or dead battery. If circuit breaker in controller trips for no apparent reason, make sure oil is in dash pots in accordance with manufacturer's specifications. Make sure fuel pipe is clear, strainers are clean, and control valves open in fuel system to internal combustion engine. Make sure all valves are open and strainer is clean in steam line to turbine.

**C.2 Warning.** Chapters 6 and 7 of NFPA 20, *Standard for the Installation of Stationary Pumps for Fire Protection*, include electrical requirements that discourage the installation of disconnect means in the power supply to electric motor–driven fire pumps. This requirement is intended to ensure the availability of power to the fire pumps. When equipment connected to those circuits is serviced or maintained, the employee can have unusual exposure to electrical and other hazards. It can be necessary to require special safe work practices and special safeguards, personal protective clothing, or both.

**C.3 Maintenance of Fire Pump Controllers After Fault Condition.**

**C.3.1 Introduction.** In a fire pump motor circuit that has been properly installed, coordinated, and in service prior to the fault, tripping of the circuit breaker or the isolating switch indicates a fault condition in excess of operating overload.

It is recommended that the following general procedures be observed by qualified personnel in the inspection and repair of the controller involved in the fault. These procedures are not intended to cover other elements of the circuit, such as wiring and motor, which can also require attention.

**C.3.2 Caution.** All inspections and tests are to be made on controllers that are de-energized at the line terminal, disconnected, locked out, and tagged so that accidental contact cannot be made with live parts and so that all plant safety procedures will be observed.

**C.3.2.1 Enclosure.** Where substantial damage to the enclosure, such as deformation, displacement of parts, or burning has occurred, replace the entire controller.

**C.3.2.2 Circuit Breaker and Isolating Switch.** Examine the enclosure interior, circuit breaker, and isolating switch for evidence of possible damage. If evidence of damage is not apparent, the circuit breaker and isolating switch can continue to be used after the door is closed.

If there is any indication that the circuit breaker has opened several short-circuit faults, or if signs of possible deterioration appear within either the enclosure, circuit breaker, or isolating switch (e.g., deposits on surface, surface discoloration, insulation cracking, or unusual toggle operation), replace the components. Verify that the external operating handle is capable of opening and closing the circuit breaker and isolating switch. If the handle fails to operate the device, this would also indicate the need for adjustment or replacement.

**C.3.2.3 Terminals and Internal Conductors.** Where there are indications of arcing damage, overheating, or both, such as discoloration and melting of insulation, replace the damaged parts.

**C.3.2.4 Contactor.** Replace contacts showing heat damage, displacement of metal, or loss of adequate wear allowance of the contacts. Replace the contact springs where applicable. If deterioration extends beyond the contacts, such as binding in the guides or evidence of insulation damage, replace the damaged parts or the entire contactor.

**C.3.2.5 Return to Service.** Before returning the controller to service, inspect for the tightness of electrical connections and for the absence of short circuits, ground faults, and leakage current.

Close and secure the enclosure before the controller circuit breaker and isolating switch are energized. Follow operating procedures on the controller to bring it into standby condition.

## Annex D Obstruction Investigation

*This annex is not a part of the requirements of this NFPA document but is included for informational purposes only.*

**D.1** For effective control and extinguishment of fire, automatic sprinklers should receive an unobstructed flow of water. Although the overall performance record of automatic sprinklers has been very satisfactory, there have been numerous instances of impaired efficiency because sprinkler piping or sprinklers were plugged with pipe scale, corrosion products, including those produced by microbiologically influenced corrosion, mud, stones, or other foreign material. If the first sprinklers to open in a fire are plugged, the fire in that area cannot be extinguished or controlled by prewetting of adjacent combustibles. In such a situation, the fire can grow to an uncontrollable size, resulting in greater fire damage and excessive sprinkler operation and even threatening the structural integrity of the building, depending on the number of plugged sprinklers and fire severity.

Keeping the inside of sprinkler system piping free of scale, silt, or other obstructing material is an integral part of an effective loss prevention program.

**D.1.1** While this chapter provides minimum requirements for the investigation and prevention of obstructions, authorities having jurisdiction must also consider regional, local, and project-specific propensities and histories to determine reasonable testing and obstruction mitigation measures.

**D.2 Obstruction Sources.**

**D.2.1 Pipe Scale.** Loss studies have shown that dry pipe sprinkler systems are involved in the majority of obstructed sprinkler fire losses. Pipe scale was found to be the most frequent obstructing material (it is likely that some of the scale was composed of corrosion products, including those produced by microbiologically influenced corrosion). Dry pipe systems that have been maintained wet and then dry alternately over a

Copyright 2015 National Fire Protection Association (NFPA). Licensed, by agreement, for individual use and download on October 23, 2015 to VETERANS AFFAIRS. No other reproduction or transmission in any form permitted without written permission of NFPA. For inquires or to report unauthorized use, contact licensing@nfpa.org.



period of years are particularly susceptible to the accumulation of scale. Also, in systems that are continuously dry, condensation of moisture in the air supply can result in the formation of a hard scale, microbiological materials, and corrosion products along the bottom of the piping. When sprinklers open, the scale is broken loose and carried along the pipe, plugging some of the sprinklers or forming obstructions at the fittings.

**D.2.2 Careless Installation or Repair.** Many obstructions are caused by careless workers during installation or repair of yard or public mains and sprinkler systems. Wood, paint brushes, buckets, gravel, sand, and gloves have been found as obstructions. In some instances, with welded sprinkler systems and systems with holes for quick-connect fittings, the cutout discs or coupons have been left within the piping, obstructing flow to sprinklers.

**D.2.3 Raw Water Sources.** Materials can be sucked up from the bottoms of rivers, ponds, or open reservoirs by fire pumps with poorly arranged or inadequately screened intakes and then forced into the system. Sometimes floods damage intakes. Obstructions include fine, compacted materials such as rust, mud, and sand. Coarse materials, such as stones, cinders, cast-iron tubercles, chips of wood, and sticks, also are common.

**D.2.4 Biological Growth.** Biological growth has been known to cause obstructions in sprinkler piping. The Asiatic clam has been found in fire protection systems supplied by raw river or lake water. With an available food supply and sunlight, these clams grow to approximately ⅜ in. to 7⁄16 in. (9 mm to 11 mm) across the shell in 1 year and up to 2⅛ in. (54 mm) and larger by the sixth year. However, once in fire mains and sprinkler piping, the growth rate is much slower. The clams get into the fire protection systems in the larval stage or while still small clams. They then attach themselves to the pipe and feed on bacteria or algae that pass through.

Originally brought to Washington state from Asia in the 1930s, the clams have spread throughout at least 33 states and possibly are present in every state. River areas reported to be highly infested include the Ohio River, Tennessee River Valley, Savannah River (South Carolina), Altamaha River (Georgia), Columbia River (Washington), and Delta-Mendota Canal (California).

**D.2.5 Sprinkler Calcium Carbonate Deposits.** Natural freshwaters contain dissolved calcium and magnesium salts in varying concentrations, depending on the sources and location of the water. If the concentration of these salts is high, the water is considered hard. A thin film composed largely of calcium carbonate, $CaCO_3$, affords some protection against corrosion where hard water flows through the pipes. However, hardness is not the only factor to determine whether a film forms. The ability of $CaCO_3$ to precipitate on the metal pipe surface also depends on the water's total acidity or alkalinity, the concentration of dissolved solids in the water, and its pH. In soft water, no such film can form.

In automatic sprinkler systems, the calcium carbonate scale formation tends to occur on the more noble metal in the electrochemical series, which is copper, just as corrosion affects the less noble metal, iron. Consequently, scale formation naturally forms on sprinklers, often plugging the orifice. The piping itself could be relatively clear. This type of sprinkler obstruction cannot be detected or corrected by normal flushing procedures. It can be found only by inspection of sprinklers in suspected areas and then removed.

Most public water utilities in very hard water areas soften their water to reduce consumer complaints of scale buildup in water heaters. Thus, the most likely locations for deposits in sprinkler systems are where sprinklers are not connected to public water but supplied without treatment directly from wells or surface water in areas that have very hard water. These areas generally include the Mississippi basin west of the Mississippi River and north of the Ohio River, the rivers of Texas and the Colorado basin, and other white areas in Figure D.2.5(a). (The water of the Great Lakes is only moderately hard.)

Within individual plants, the sprinklers most likely to have deposits are located as follows:

(1) In wet systems only.
(2) In high temperature areas, except where water has unusually high pH *[see Figure D.2.5(b)]*. High temperature areas include those near dryers, ovens, and skylights or at roof peaks.
(3) In old sprinkler systems that are frequently drained and refilled.
(4) In pendent sprinklers that are located away from air pockets and near convection currents.

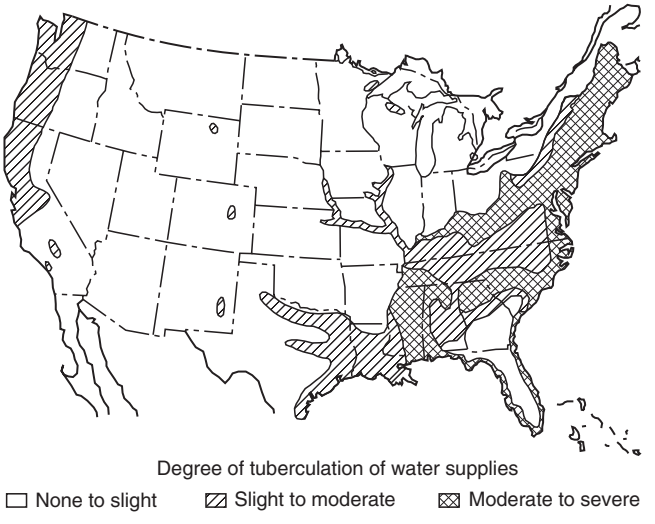


**FIGURE D.2.5(a) Map of Hard Water Areas.** ***(Provided by Cast Iron Pipe Research Association. Used with permission.)***

**D.2.6 Forms of Corrosion.** Corrosion is defined as the deterioration of a material, usually a metal, resulting from a chemical or electrochemical reaction. The eight main forms of corrosion include (1) uniform corrosion, (2) pitting, (3) galvanic corrosion, (4) crevice corrosion, (5) selective leaching (parting), (6) erosion corrosion, (7) environmental cracking, and (8) intergranular corrosion. Microbiologically influenced corrosion (MIC) is included herein as a ninth form of corrosion, although it is usually a secondary factor that accelerates or exacerbates the rate of another form of corrosion. Definitions of the different forms of corrosion are discussed next.

(1) *Uniform (or general) corrosion:* A regular loss of a small quantity of metal over the entire area or over a large section of the total area, which is evenly distributed within a pipe(s).
(2) *Pitting:* A localized form of corrosion that results in holes or cavities in the metal. Pitting is considered to be one of the more destructive forms of corrosion and is often difficult to detect. Pits can be covered or open and normally grow in the direction of gravity — for example, at the bottom of a horizontal surface.

Copyright 2015 National Fire Protection Association (NFPA). Licensed, by agreement, for individual use and download on October 23, 2015 to VETERANS AFFAIRS. No other reproduction or transmission in any form permitted without written permission of NFPA. For inquires or to report unauthorized use, contact licensing@nfpa.org.



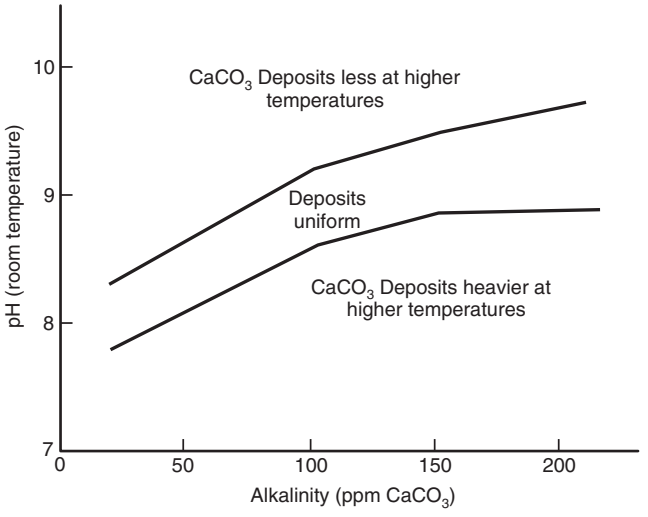


**FIGURE D.2.5(b) Scale Deposition as Function of Alkalinity/pH Ratio.**

(3) *Galvanic corrosion:* An electric potential exists between dissimilar metals in a conductive (corrosive) solution. The contact between the two materials allows electrons to transfer from one metal to the other. One metal acts as a cathode and the other as an anode. Corrosion usually occurs at anodic metal only.

(4) *Crevice corrosion:* A localized form of corrosion that occurs within crevices and other shielded areas on metal surfaces exposed to a stagnant corrosive solution. This form of corrosion usually occurs beneath gaskets, in holes, surface deposits, in thread and groove joints. Crevice corrosion is also referred to as gasket corrosion, deposit corrosion, and under-deposit corrosion.

(5) *Selective leaching:* The selective removal of one element from an alloy by corrosion. A common example is dezincification (selective removal of zinc) of unstabilized brass, resulting in a porous copper structure.

(6) *Erosion corrosion:* Corrosion resulting from the cumulative damage of electrochemical reactions and mechanical effects. Erosion corrosion is the acceleration or increase in the rate of corrosion created by the relative movement of a corrosive fluid and a metal surface. Erosion corrosion is observed as grooves, gullies, waves, rounded holes, or valleys in a metal surface.

(7) *Environmental cracking:* An acute form of localized corrosion caused by mechanical stresses, embrittlement, or fatigue.

(8) *Integranular corrosion:* Corrosion caused by impurities at grain boundaries, enrichment of one alloying element, or depletion of one of the elements in the grain boundary areas.

(9) *Microbiologically influenced corrosion (MIC):* Corrosion initiated or accelerated by the presence and activities of microorganisms, including bacteria and fungi. Colonies (also called biofilms and slimes) are formed in the surface of pipes among a variety of types of microbes. Microbes deposit iron, manganese, and various salts into the pipe surfaces, forming nodules, tubercles, and carbuncles. The formation of these deposits can cause obstruction to flow and dislodge, causing blockage (plugging) of system piping, valves, and sprinklers.

**D.2.7 Microbiologically Influenced Corrosion (MIC).** The most common biological growths in sprinkler system piping are those formed by microorganisms, including bacteria and fungi. These microbes produce colonies (also called bio-films, slimes) containing a variety of types of microbes. Colonies form on the surface of wetted pipe in both wet and dry systems. Microbes also deposit iron, manganese, and various salts onto the pipe surface, forming discrete deposits (also termed nodules, tubercles, and carbuncles). These deposits can cause obstruction to flow and dislodge, causing plugging of fire sprinkler components. Subsequent under-deposit pitting can also result in pinhole leaks.

Microbiologically influenced corrosion (MIC) is corrosion influenced by the presence and activities of microorganisms. MIC almost always occurs with other forms of corrosion (oxygen corrosion, crevice corrosion, and under-deposit corrosion). MIC starts as microbial communities (also called biofilms, slimes) growing on the interior surface of the wetted sprinkler piping components in both wet and dry systems. The microbial communities contain many types of microbes, including slime formers, acid-producing bacteria, iron-depositing bacteria, and sulfate-reducing bacteria, and are most often introduced into the sprinkler system from the water source. The microbes deposit iron, manganese, and various salts onto the pipe surface, forming discrete deposits (also termed nodules, tubercles, and carbuncles). These deposits can cause obstruction to flow and dislodge, causing plugging of fire sprinkler components. MIC is most often seen as severe pitting corrosion occurring under deposits. Pitting is due to microbial activities such as acid production, oxygen consumption, and accumulation of salts. Oxygen and salts, especially chloride, can greatly increase the severity of MIC and other forms of corrosion.

In steel pipe, MIC is most often seen as deposits on the interior surface of the pipes. The deposits can be orange, red, brown, black, and white (or combinations thereof), depending on local conditions and water chemistry. The brown, orange, and red forms are most common in oxygenated portions of the system and often contain oxidized forms of iron and other materials on the outside, with reduced (blacker) corrosion products on the inside. Black deposits are most often in smaller diameter piping farther from the water source and contain reduced forms (those with less oxygen) of corrosion products. White deposits often contain carbonate scales.

MIC of copper and copper alloys occurs as discrete deposits of smaller size, which are green to blue in color. Blue slimes can also be produced in copper piping or copper components (e.g., brass heads).

MIC is often first noticed as a result of pinhole leaks after only months to a few years of service. Initial tests for the presence of MIC should involve on-site testing for microbes and chemical species (iron, pH, oxygen) important in MIC. This information is also very important in choosing treatment methods. These tests can be done on water samples from source waters and various locations in the sprinkler system (e.g., main drain, inspector's test valve). Confirmation of MIC can be made by examination of interior of pipes for deposits and under-deposit corrosion with pit morphology consistent with MIC (cup-like pits within pits and striations).

The occurrence and severity of MIC is enhanced by the following:

(1) Using untreated water to test and fill sprinkler piping. This is made worse by leaving the water in the system for long periods of time.

Copyright 2015 National Fire Protection Association (NFPA). Licensed, by agreement, for individual use and download on October 23, 2015 to VETERANS AFFAIRS. No other reproduction or transmission in any form permitted without written permission of NFPA. For inquires or to report unauthorized use, contact licensing@nfpa.org.



(2) Introduction of new and untreated water containing oxygen, microbes, salts, and nutrients into the system on a frequent basis (during repair, renovation, and/or frequent flow tests).
(3) Leaving dirt, debris, and especially oils, pipe joint compound, and so forth in the piping. These provide nutrients and protection for the microbes, often preventing biocides and corrosion inhibitors from reaching the microbes and corrosion sites.

Once the presence of MIC has been confirmed, the system should be assessed to determine the extent and severity of MIC. Severely affected portions should be replaced or cleaned to remove obstructions and pipe not meeting minimal mechanical specifications.

**D.3 Investigation Procedures.** If unsatisfactory conditions are observed as outlined in Section 14.3, investigations should be made to determine the extent and severity of the obstructing material. From the fire protection system plan, determine the water supply sources, age of underground mains and sprinkler systems, types of systems, and general piping arrangement. Consider the possible sources of obstruction material.

Examine the fire pump suction supply and screening arrangements. If necessary, have the suction cleaned before using the pump in tests and flushing operations. Gravity tanks should be inspected internally, with the exception of steel tanks that have been recently cleaned and painted. If possible, have the tank drained and determine whether loose scale is on the shell or if sludge or other obstructions are on the tank bottom. Cleaning and repainting could be in order, particularly if it has not been done within the previous 5 years.

Investigate yard mains first, then sprinkler systems.

Where fire protection control valves are closed during investigation procedures, the fire protection impairment precautions outlined in Chapter 15 should be followed.

Large quantities of water are needed for investigation and for flushing. It is important to plan the safest means of disposal in advance. Cover stock and machinery susceptible to water damage, and keep equipment on hand for mopping up any accidental discharge of water.

**D.3.1 Investigating Yard Mains.** Flow water through yard hydrants, preferably near the extremes of selected mains, to determine whether mains contain obstructive material. It is preferable to connect two lengths of 2½ in. (65 mm) hose to the hydrant. Attach burlap bags to the free ends of the hose from which the nozzles have been removed to collect any material flushed out, and flow water long enough to determine the condition of the main being investigated. If there are several water supply sources, investigate each independently, avoiding any unnecessary interruptions to sprinkler protection. In extensive yard layouts, repeat the tests at several locations, if necessary, to determine general conditions.

If obstructive material is found, all mains should be flushed thoroughly before investigating the sprinkler systems. *(See Section D.5.)*

**D.3.2 Investigating Sprinkler Systems.** Investigate dry systems first. Tests on several carefully selected, representative systems usually are sufficient to indicate general conditions throughout the plant. If, however, preliminary investigations indicate the presence of obstructing material, this justifies investigating all systems (both wet and dry) before outlining needed flushing operations. Generally, the system can be considered reasonably free of obstructing material, provided the following conditions apply:

(1) Less than ½ cup of scale is washed from the cross mains.
(2) Scale fragments are not large enough to plug a sprinkler orifice.
(3) A full, unobstructed flow is obtained from each branch line inspected.

Where other types of foreign material are found, judgment should be used before considering the system unobstructed. Obstruction potential is based on the physical characteristics and source of the foreign material.

In selecting specific systems or branch lines for investigation, the following should be considered:

(1) Lines found obstructed during a fire or during maintenance work
(2) Systems adjacent to points of recent repair to yard mains, particularly if hydrant flow shows material in the main

Tests should include flows through 2½ in. (65 mm) fire hose directly from cross mains *[see Figure D.3.2(a) and Figure D.3.2(b)]* and flows through 1½ in. (40 mm) hose from representative branch lines. Two or three branch lines per system is a representative number of branch lines where investigating for scale accumulation. If significant scale is found, investigation of additional branch lines is warranted. Where investigating for foreign material (other than scale), the number of branch lines needed for representative sampling is dependent on the source and characteristic of the foreign material.

If provided, fire pumps should be operated for the large line flows, since maximum flow is desirable. Burlap bags should be used to collect dislodged material as is done in the investigation of yard mains. Each flow should be continued until the water clears (i.e., a minimum of 2 to 3 minutes at full flow for sprinkler mains). This is likely to be sufficient to indicate the condition of the piping interior.

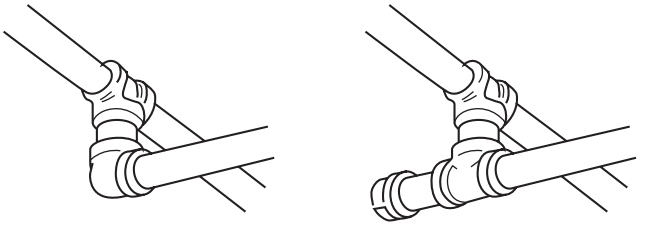

**FIGURE D.3.2(a) Replacement of Elbow at End of Cross Main with Flushing Connection Consisting of 50 mm (2 in.) Nipple and Cap.**

**D.3.3 Investigating Dry Pipe Systems.** Flood dry pipe systems one or two days before obstruction investigations to soften pipe scale and deposits. After selecting the test points of a dry pipe system, close the main control valve and drain the system. Check the piping visually with a flashlight while it is being dismantled. Attach hose valves and 1½ in. (40 mm) hose to the ends of the lines to be tested, shut the valves, have air pressure restored on the system, and reopen the control valve. Open the hose valve on the end branch line, allowing the system to trip in simulation of normal action. Any obstructions should be cleared from the branch line before proceeding with further tests.

Copyright 2015 National Fire Protection Association (NFPA). Licensed, by agreement, for individual use and download on October 23, 2015 to VETERANS AFFAIRS. No other reproduction or transmission in any form permitted without written permission of NFPA. For inquires or to report unauthorized use, contact licensing@nfpa.org.



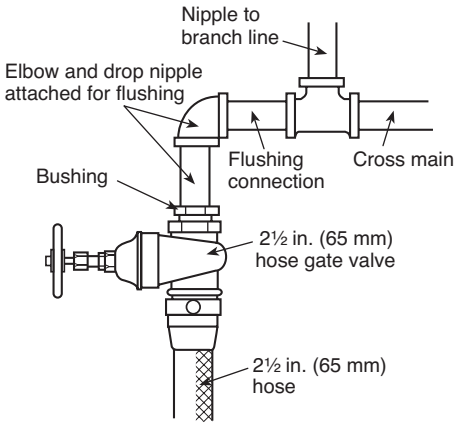


**FIGURE D.3.2(b) Connection of 65 mm (2½ in.) Hose Gate Valve with 50 mm (2 in.) Bushing and Nipple and Elbow to 50 mm (2 in.) Cross Main.**

After flowing the small end line, shut its hose valve and test the feed or cross main by discharging water through a 2½ in. (65 mm) fire hose, collecting any foreign material in a burlap bag.

After the test, the dry pipe valve should be cleaned internally and reset. Its control valve should be locked open and a drain test performed.

**D.3.4 Investigating Wet Pipe Systems.** Testing of wet systems is similar to that of dry systems, except that the system should be drained after closing the control valve to permit installation of hose valves for the test. Slowly reopen the control valve and make a small hose flow as specified for the branch line, followed by the 2½ in. (65 mm) hose flow for the cross main.

In any case, if lines become plugged during the tests, piping should be dismantled and cleaned, the extent of plugging noted, and a clear flow obtained from the branch line before proceeding further.

Perform similar tests on representative systems to indicate the general condition of the wet systems throughout the plant, keeping a detailed record of the procedures performed.

**D.3.5 Other Obstruction Investigation Methods.** Other obstruction investigation methods, such as technically proven ultrasonic and X-ray examination, have been evaluated and if applied correctly, are successful at detecting obstructions.

The sources of the obstructing material should be determined and steps taken to prevent further entrance of such material. This entails work such as inspection and cleaning of pump suction screening facilities or cleaning of private reservoirs. If recently laid public mains appear to be the source of the obstructing material, waterworks authorities should be requested to flush their system.

**D.4 Obstruction Prevention Program.**

**D.4.1 Dry Pipe and Preaction Systems — Scale.**

(1) Dry pipe and preaction systems using noncoated ferrous piping should be thoroughly investigated for obstruction from corrosion after they have been in service for 15 years, for 25 years, and every 5 years thereafter.
(2) Dry pipe systems with noncoated ferrous piping should be kept on air year-round, rather than on air and water alternately, to inhibit formation of rust and scale.

**D.4.2 Flushing Connections.** Sprinkler systems installed in accordance with recent editions of NFPA 13, *Standard for the Installation of Sprinkler Systems*, should have provisions for flushing each cross main. Similarly, branch lines on gridded systems should be capable of being readily "broken" at a simple union or flexible joint. Property owners of systems installed without these provisions should be encouraged to provide them when replacement or repair work is being done.

**D.4.3 Suction Supplies.**

(1) Screen pump suction supplies and screens should be maintained. Connections from penstocks should be equipped with strainers or grids, unless the penstock inlets themselves are so equipped. Pump suction screens of copper or brass wire tend to promote less aquatic growth.
(2) Extreme care should be used to prevent material from entering the suction piping when cleaning tanks and open reservoirs. Materials removed from the interior of gravity tanks during cleaning should not be allowed to enter the discharge pipe.
(3) Small mill ponds could need periodic dredging where weeds and other aquatic growth are inherent.

**D.4.4 Asian Clams.** Effective screening of larvae and small-size, juvenile Asian clams from fire protection systems is very difficult. To date, no effective method of total control has been found. Such controls can be difficult to achieve in fire protection systems.

**D.4.5 Calcium Carbonate.** For localities suspected of having hard water, sample sprinklers should be removed and inspected yearly. Paragraph D.2.5 outlines sprinkler locations prone to the accumulation of deposits where hard water is a problem. Sprinklers found with deposits should be replaced, and adjacent sprinklers should be inspected.

**D.4.6 Zebra Mussels.** Several means of controlling the zebra mussel are being studied, including molluscicides, chlorines, ozone, shell strainers, manual removal, robotic cleaning, water jetting, line pigging, sonic pulses, high-voltage electrical fields, and thermal backwashing. It is believed that these controls might need to be applied only during spawning periods when water temperatures are 57°F to 61°F (14°C to 16°C) and veligers are present. Several silicon grease-based coatings also are being investigated for use within piping systems.

While it appears that the use of molluscicides could provide the most effective means of controlling the mussel, these chemicals are costly. It is believed that chlorination is the best available short-term treatment, but there are problems associated with the use of chlorine, including strict Environmental Protection Agency regulations on the release of chlorine into lakes and streams. The use of nonselective poison, such as chlorine, in the amounts necessary to kill the mussels in large bodies of water could be devastating to entire ecosystems.

To provide an effective means of control against zebra mussels in fire protection systems, control measures should be applied at the water source, instead of within the piping system. Effective controls for growth of the zebra mussel within fire protection systems include the following:

(1) Selecting a water source that is not subject to infestation. This could include well water or potable or pretreated water.
(2) Implementing a water treatment program that includes biocides or elevated pH, or both.
(3) Implementing a water treatment program to remove oxygen, to ensure control of biological growth within piping.
(4) Relying on a tight system approach to deny oxygen and nutrients that are necessary to support growth.

Copyright 2015 National Fire Protection Association (NFPA). Licensed, by agreement, for individual use and download on October 23, 2015 to VETERANS AFFAIRS. No other reproduction or transmission in any form permitted without written permission of NFPA. For inquires or to report unauthorized use, contact licensing@nfpa.org.



**D.5 Flushing Procedures.**

**D.5.1 Yard Mains.** Yard mains should be flushed thoroughly before flushing any interior piping. Flush yard piping through hydrants at dead ends of the system or through blow-off valves, allowing the water to run until clear. If the water is supplied from more than one direction or from a looped system, close divisional valves to produce a high-velocity flow through each single line. A velocity of at least 10 ft/sec (3 m/sec) is necessary for scouring the pipe and for lifting foreign material to an aboveground flushing outlet. Use the flow specified in Table D.5.1 or the maximum flow available for the size of the yard main being flushed.

Connections from the yard piping to the sprinkler riser should be flushed. These are usually 6 in. (150 mm) mains. Although flow through a short, open-ended 2 in. (50 mm) drain can create sufficient velocity in a 6 in. (150 mm) main to move small obstructing material, the restricted waterway of the globe valve usually found on a sprinkler drain might not allow stones and other large objects to pass. If the presence of large size material is suspected, a larger outlet is needed to pass such material and to create the flow necessary to move it. Fire department connections on sprinkler risers can be used as flushing outlets by removing the clappers. Yard mains also can be flushed through a temporary Siamese fitting attached to the riser connection before the sprinkler system is installed. *[See Figure D.5.1.]*

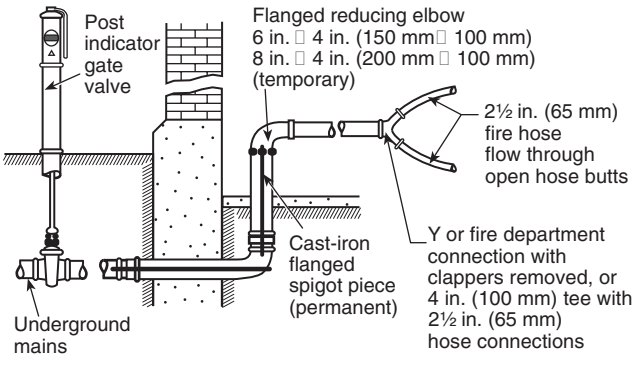


**FIGURE D.5.1 Arrangement for Flushing Branches from Underground Mains to Sprinkler Risers.**

**D.5.2 Sprinkler Piping.** Two methods commonly are used for flushing sprinkler piping:

(1) The hydraulic method
(2) The hydropneumatic method

The hydraulic method consists of flowing water from the yard mains, sprinkler risers, feed mains, cross mains, and branch lines, respectively, in the same direction in which water would flow during a fire.

The hydropneumatic method uses special equipment and compressed air to blow a charge of about 30 gal (114 $dm^3$) of water from the ends of branch lines back into feed mains and down the riser, washing the foreign material out of an opening at the base of the riser.

The choice of method depends on conditions at the individual plant and the type of material installed. If examination indicates the presence of loose sand, mud, or moderate amounts of pipe scale, the piping generally can be flushed satisfactorily by the hydraulic method. Where the material is more difficult to remove and available water pressures are too low for effective scouring action, the hydropneumatic method generally is more satisfactory. The hydropneumatic method should not be used with listed CPVC sprinkler piping.

In some cases, where obstructive material is solidly packed or adheres tightly to the walls of the piping, the pipe needs to be dismantled and cleaned by rodding or other means.

Dry pipe systems should be flooded one or two days before flushing to soften pipe scale and deposits.

Successful flushing by either the hydraulic or hydropneumatic method is dependent on establishing sufficient velocity of flow in the pipes to remove silt, scale, and other obstructive material. With the hydraulic method, water should be moved through the pipe at least at the rate of flow indicated in Table D.5.1.

Where flushing a branch line through the end pipe, sufficient water should be discharged to scour the largest pipe in the branch line. Lower rates of flow can reduce the efficiency of the flushing operation. To establish the recommended flow, remove the small end piping and connect the hose to a larger section, if necessary.

Where pipe conditions indicate internal or external corrosion, a section of the pipe affected should be cleaned thoroughly to determine whether the walls of the pipe have seriously weakened. Hydrostatic testing should be performed as outlined in NFPA 13, *Standard for the Installation of Sprinkler Systems.*

Pendent sprinklers should be removed and inspected until it is reasonably certain that all are free of obstruction material.

Painting the ends of branch lines and cross mains is a convenient method for keeping a record of those pipes that have been flushed.

**D.5.3 Hydraulic Method.** After the yard mains have been thoroughly cleaned, flush risers, feed mains, cross mains, and finally the branch lines. In multistory buildings, systems should be flushed by starting at the lowest story and working up. Branch line flushing in any story can immediately follow the flushing of feed and cross mains in that story, allowing one story to be completed at a time. Following this sequence prevents drawing obstructing material into the interior piping.

To flush risers, feed mains, and cross mains, attach 2½ in. (65 mm) hose gate valves to the extreme ends of these lines *[see Figure D.5.3]*. Such valves usually can be procured from the manifold of fire pumps or hose standpipes. As an alternative, an adapter with 2½ in. (65 mm) hose thread and standard pipe thread can be used with a regular gate valve. A length of fire hose without a nozzle should be attached to the flushing connection. To prevent kinking of the hose and to obtain maximum flow, an elbow usually should be installed between the end of the sprinkler pipe and the hose gate valve. Attach the valve and hose so that no excessive strain will be placed on the threaded pipe and fittings. Support hose lines properly.

Where feed and cross mains and risers contain pipe 4 in., 5 in., and 6 in. (100 mm, 125 mm, and 150 mm) in diameter, it could be necessary to use a Siamese with two hose connections to obtain sufficient flow to scour this larger pipe.

Flush branch lines after feed and cross mains have been thoroughly cleared. Equip the ends of several branch lines with gate valves, and flush individual lines of the group consecutively. This eliminates the need for shutting off and draining the sprinkler system to replace a single hose line. The hose should be 1½ in. (40 mm) in diameter and as short as practi-

Copyright 2015 National Fire Protection Association (NFPA). Licensed, by agreement, for individual use and download on October 23, 2015 to VETERANS AFFAIRS. No other reproduction or transmission in any form permitted without written permission of NFPA. For inquires or to report unauthorized use, contact licensing@nfpa.org.



**Table D.5.1 Flushing Rates to Accomplish Flow of 10 ft/sec (3 m/sec)**

| | Steel | | | Copper | | | | Polybutylene | |
|---|---|---|---|---|---|---|---|---|---|
| Pipe Size | SCH 10 (gpm) | SCH 40 (gpm) | XL (gpm) | K (gpm) | L (gpm) | M (gpm) | CPVC (gpm) | CTS (gpm) | IPS (gpm) |
| ¾ | — | — | — | 14 | 15 | 16 | 19 | 12 | 17 |
| 1 | 29 | 24 | 30 | 24 | 26 | 27 | 30 | 20 | 27 |
| 1¼ | 51 | 47 | 52 | 38 | 39 | 41 | 48 | 30 | 43 |
| 1½ | 69 | 63 | 70 | 54 | 55 | 57 | 63 | 42 | 57 |
| 2 | 114 | 105 | 114 | 94 | 96 | 99 | 98 | 72 | 90 |
| 2½ | 170 | 149 | 163 | 145 | 149 | 152 | 144 | — | — |
| 3 | 260 | 230 | 251 | 207 | 212 | 217 | 213 | — | — |
| 4 | 449 | 396 | — | 364 | 373 | 379 | — | — | — |
| 5 | 686 | 623 | — | 565 | 582 | 589 | — | — | — |
| 6 | 989 | 880 | — | 807 | 836 | 846 | — | — | — |
| 8 | 1665 | 1560 | — | 1407 | 1460 | 1483 | — | — | — |
| 10 | 2632 | 2440 | — | 2185 | 2267 | 2303 | — | — | — |
| 12 | — | 3520 | — | — | — | — | — | — | — |

For SI units, 1 gpm = 3.785 L/min.

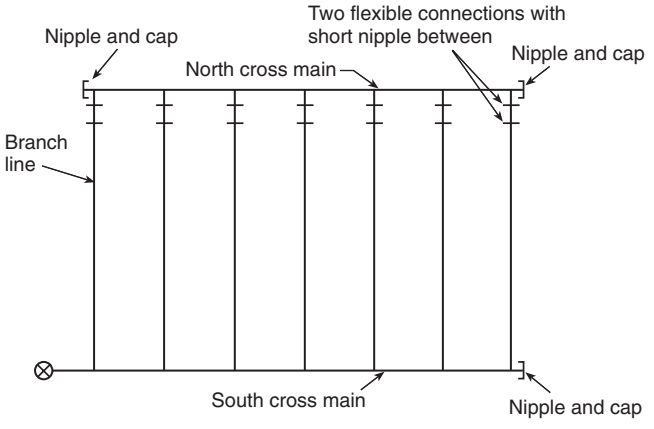


**FIGURE D.5.3 Gridded Sprinkler System Piping.**

cable. Branch lines can be permitted to be flushed in any order that expedites the work.

Branch lines also can be permitted to be flushed through pipe 1½ in. (40 mm) in diameter or larger while extended through a convenient window. If pipe is used, 45 degree fittings should be provided at the ends of branch lines. Where flushing branch lines, hammering the pipes is an effective method of moving obstructions.

Figure D.5.3 shows a typical gridded piping arrangement prior to flushing. The flushing procedure is as follows:

(1) Disconnect all branch lines and cap all open ends.
(2) Remove the cap from the east end of the south cross main, flush the main, and replace the cap.
(3) Remove the cap from branch line 1, flush the line, and replace the cap.
(4) Repeat step (3) for the remaining branch lines.
(5) Reconnect enough branch lines at the west end of the system so that the aggregate cross-sectional area of the branch lines approximately equals the area of the north cross main. For example, three 1¼ in. (32 mm) branch lines approximately equal a 2½ in. (65 mm) cross main. Remove the cap from the east end of the north cross main, flush the main, and replace the cap.
(6) Disconnect and recap the branch lines. Repeat step (5), but reconnect branch lines at the east end of the system and flush the north cross main through its west end.
(7) Reconnect all branch lines and recap the cross main. Verify that the sprinkler control valve is left in the open and locked position.

**D.5.4 Hydropneumatic Method.** The apparatus used for hydropneumatic flushing consists of a hydropneumatic machine, a source of water, a source of compressed air, 1 in. (25 mm) rubber hose for connecting to branch lines, and 2½ in. (65 mm) hose for connecting to cross mains.

The hydropneumatic machine *[see Figure D.5.4(a)]* consists of a 30 gal (114 $dm^3$) (4 $ft^3$) water tank mounted over a 185 gal (700 $dm^3$) (4 $ft^3$) compressed air tank. The compressed air tank is connected to the top of the water tank through a 2 in. (50 mm) lubricated plug cock. The bottom of the water tank is connected through hose to a suitable water supply. The compressed air tank is connected through suitable air hose to either the plant air system or a separate air compressor.

To flush the sprinkler piping, the water tank is filled with water, the pressure is raised to 100 psi (6.9 bar) in the compressed air tank, and the plug cock between tanks is opened to put air pressure on the water. The water tank is connected by hose to the sprinkler pipe to be flushed. The lubricated plug cock on the discharge outlet at the bottom of the water tank then is snapped open, allowing the water to be "blown" through the hose and sprinkler pipe by the compressed air. The water tank and air tank should be recharged after each blow.

Outlets for discharging water and obstructing material from the sprinkler system should be arranged. With the clappers of dry pipe valves and alarm check valves on their seats and cover plates removed, sheet metal fittings can be used for connection to 2½ in. (65 mm) hose lines or for discharge into a drum [maximum capacity per blow is approximately 30 gal (114 $dm^3$)]. If the 2 in. (50 mm) riser drain is to be used, the

Copyright 2015 National Fire Protection Association (NFPA). Licensed, by agreement, for individual use and download on October 23, 2015 to VETERANS AFFAIRS. No other reproduction or transmission in any form permitted without written permission of NFPA. For inquires or to report unauthorized use, contact licensing@nfpa.org.



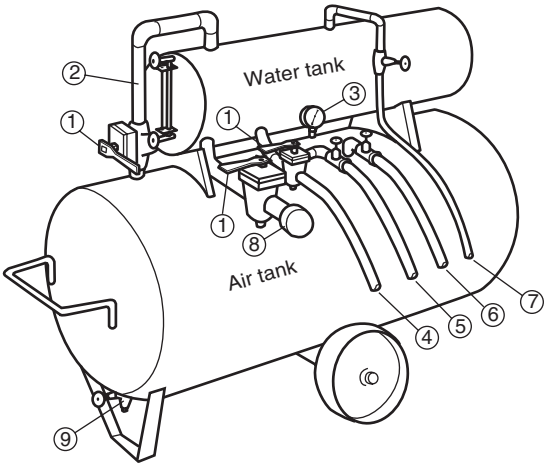


1 Lubricated plug cocks
2 Pipe connection between air and water tanks (This connection is open when flushing sprinkler system.)
3 Air pressure gauge
4 1 in. (25 mm) rubber hose (air type) (Used to flush sprinkler branch lines.)
5 Hose connected to source of water (Used to fill water tank.)
6 Hose connected to ample source of compressed air (Used to supply air tank.)
7 Water tank overflow hose
8 2½ in. (65 mm) pipe connection [Where flushing large interior piping, connect woven jacket fire hose here and close 1 in. (25 mm) plug cock hose connection (4) used for flushing sprinkler branch lines.]
9 Air tank drain valve

**FIGURE D.5.4(a) Hydropneumatic Machine.**

drain valve should be removed and a direct hose connection made. For wet pipe systems with no alarm check valves, the riser should be taken apart just below the drain opening and a plate inserted to prevent foreign material from dropping to the base of the riser. Where dismantling of a section of the riser for this purpose is impractical, the hydropneumatic method should not be used.

Before starting a flushing job, each sprinkler system to be cleaned should be studied and a schematic plan prepared showing the order of the blows.

To determine that the piping is clear after it has been flushed, representative branch lines and cross mains should be investigated, using both visual examination and sample flushings.

(1) *Branch Lines.* With the yard mains already flushed or known to be clear, the sprinkler branch lines should be flushed next. The order of cleaning individual branch lines should be laid out carefully if an effective job is to be done. In general, the branch lines should be flushed, starting with the branch closest to the riser and working toward the dead end of the cross main. *[See Figure D.5.4(b).]* The order for flushing the branch lines is shown by the circled numerals. In this example, the southeast quadrant is flushed first, then the southwest, followed by the northeast, and, finally, the northwest. Air hose 1 in. (25 mm) in diameter is used to connect the machine with the end of the branch line being flushed. This hose air pressure should be allowed to drop to 85 psi (5.9 bar) before the valve is closed. The resulting short slug of water experiences less friction loss and a higher velocity and, therefore, cleans more effectively than if the full 30 gal (114 $dm^3$) of water were to be used. One blow is made for each branch line.

(2) *Large Piping.* Where flushing cross mains, fill the water tank completely and raise the pressure in the air receiver to 100 psi (6.9 bar) (690 kPa). Connect the machine to the end of the cross main to be flushed with no more than 50 ft (15.2 m) of 2½ in. (65 mm) hose. After opening the valve, allow air pressure in the machine to drop to zero (0). Two to six blows are necessary at each location, depending on the size and length of the main. In Figure D.5.4(b), the numerals in squares indicate the location and order of the cross main blows. Because the last branch line blows performed were located west of the riser, clean the cross main located east of the riser first. Where large cross mains are to be cleaned, it is best, if practical, to make one blow at 38, one at 39, the next again at 38, then again at 39, alternating in this manner until the required number of blows has been made at each location.

(3) Where flushing cross mains and feed mains, arrange the work so that the water passes through a minimum of right-angle bends. In Figure D.5.4(b), blows at 38 should be adequate to flush the cross mains back to the riser. Do not attempt to clean the cross main from location A to the riser by backing out branch line 16 and connecting the hose to the open side of the tee. If this were to be done, a considerable portion of the blow would pass northward up the 3 in. (76 mm) line supplying branches 34 to 37, and the portion passing eastward to the riser could be ineffective. Where the size, length, and condition of cross mains necessitate blowing from a location corresponding to location A, the connection should be made directly to the cross main corresponding to the 3½ in. (90 mm) pipe so that the entire flow travels to the riser. Where flushing through a tee, always flush the run of the tee after flushing the branch. Note the location of blows 35, 36, and 37 in Figure D.5.4(b). Gridded systems can be flushed in a similar fashion. With branch lines disconnected and capped, begin flushing the branch line closest to the riser (branch line 1 in Figure D.5.3), working toward the most remote line. Then flush the south cross main in Figure D.5.3 by connecting the hose to the east end. Flushing the north cross main involves connecting the hose to one end while discharging to a safe location from the other end.

Copyright 2015 National Fire Protection Association (NFPA). Licensed, by agreement, for individual use and download on October 23, 2015 to VETERANS AFFAIRS. No other reproduction or transmission in any form permitted without written permission of NFPA. For inquires or to report unauthorized use, contact licensing@nfpa.org.



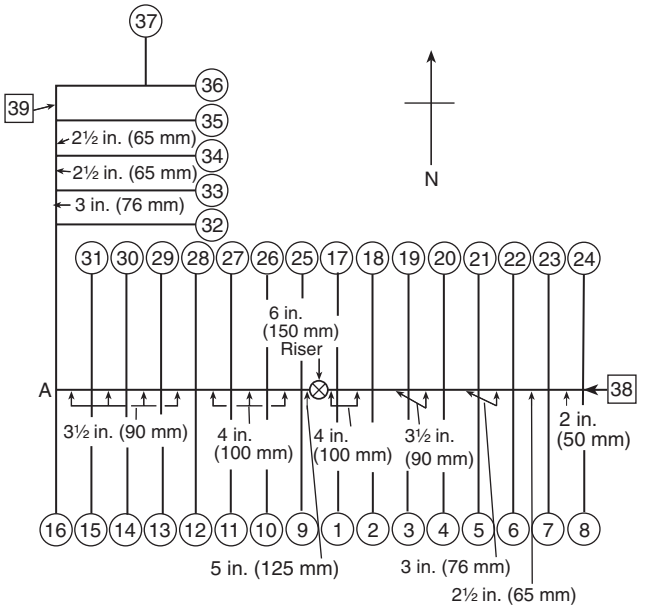


**FIGURE D.5.4(b) Schematic Diagram of Sprinkler System Showing Sequence To Be Followed Where Hydropneumatic Method Is To Be Utilized.**

## Annex E Hazard Evaluation Form

*This annex is not a part of the requirements of this NFPA document but is included for informational purposes only.*

**E.1** This annex provides one example of a hazard evaluation form. A hazard evaluation is not part of a system inspection. *(See Figure E.1.)*

Copyright 2015 National Fire Protection Association (NFPA). Licensed, by agreement, for individual use and download on October 23, 2015 to VETERANS AFFAIRS. No other reproduction or transmission in any form permitted without written permission of NFPA. For inquires or to report unauthorized use, contact licensing@nfpa.org.



## FIRE SPRINKLER SYSTEM HAZARD EVALUATION

Changes in building occupancy, use, or process, or material used or stored, create the need for evaluation of the installed fire protection systems. This form is intended to identify and evaluate such changes and should be completed only by an individual properly qualified in the area of system design.

Owner: _____ Owner's address: _____

Property being evaluated: _____

Property address: _____

Date of work: _____

(All responses refer to the current hazard evaluation performed on this date.)

**Section 1. Identification of Sprinklered Occupancy and Storage Hazards**

(Use additional pages as needed.)

| Area of Property (List nonsprinklered areas separately in Section 3.) | Type of System and Sprinklers | Design Capability of System | Hazard Protected (Uses or storage arrangements, including commodity) | Improvements Needed to Address Hazard |
|---|---|---|---|---|
| 1. | | | | |
| 2. | | | | |
| 3. | | | | |
| 4. | | | | |
| 5. | | | | |

© 2013 National Fire Protection Association NFPA 25 (p. 1 of 4)

**FIGURE E.1 Fire Sprinkler Hazard Evaluation.**

Copyright 2015 National Fire Protection Association (NFPA). Licensed, by agreement, for individual use and download on October 23, 2015 to VETERANS AFFAIRS. No other reproduction or transmission in any form permitted without written permission of NFPA. For inquires or to report unauthorized use, contact licensing@nfpa.org.



## FIRE SPRINKLER SYSTEM HAZARD EVALUATION *(continued)*

### Section 2. Evaluation of Protection

For each area of the property evaluated in Section 1, please answer the following questions with a "yes," "no," "N/A," or "?" and explain all "no" and "?" responses below by row and column identification:

| **Answer the following for each identified property area:** | **1** | **2** | **3** | **4** | **5** |
|---|---|---|---|---|---|
| a. Are all sprinklers the correct type for their application? | | | | | |
| b. Are the obstructions to sprinklers in all areas within acceptable limits for the specific types of sprinklers used? | | | | | |
| c. Are hazards associated with all occupancy areas consistent with hazards typical for that occupancy hazard classification? | | | | | |
| d. Are stockpiles of combustibles located within occupancy areas limited to appropriate heights? | | | | | |
| e. Are miscellaneous and dedicated storage areas properly identified and managed? | | | | | |
| f. Are all dedicated storage areas protected in accordance with the proper storage configuration and commodity classification? | | | | | |
| g. Is the storage or use of flammable liquids, combustible liquids, or aerosol products in any area properly addressed? | | | | | |
| h. Is all idle pallet storage properly protected? | | | | | |
| i. Is there any presence of nitrate film, pyroxylin plastic, compressed or liquefied gas cylinders, liquid or solid oxidizers, or organic peroxide formulations except where specifically addressed by appropriate protection measures? | | | | | |
| j. Are all sprinklers spaced appropriately for the hazard and the type of sprinkler? | | | | | |
| k. Do the available sources of heat and cooling appear adequate for the type of system and temperature rating of sprinklers? | | | | | |

Explanation of "no" and "?" answers:

*Examples:*
*b2 – no – Obstructions to ESFR sprinklers exceed currently accepted standards*
*e3 – ? – Owner must provide information on type of plastic involved in product before evaluation can be finalized.*

© 2013 National Fire Protection Association NFPA 25 (p. 2 of 4)

**FIGURE E.1** ***Continued***

Copyright 2015 National Fire Protection Association (NFPA). Licensed, by agreement, for individual use and download on October 23, 2015 to VETERANS AFFAIRS. No other reproduction or transmission in any form permitted without written permission of NFPA. For inquires or to report unauthorized use, contact licensing@nfpa.org.



## FIRE SPRINKLER SYSTEM HAZARD EVALUATION *(continued)*

**Section 3. Evaluation of Unsprinklered Areas**

| Area of Property for Which Protection Is Not Provided | Basis of Lack of Protection (if known) | Basis for Omission Under Current Codes/Standards |
|---|---|---|
| 1. | | |
| 2. | | |
| 3. | | |
| 4. | | |
| 5. | | |

**Section 4. Water Supply Evaluation**

If this hazard evaluation is the result of a reduction in the residual pressure during routine inspections, explain the results of the investigation made to determine the reasons for this change:

_____

_____

_____

Explain the basis of continued acceptability of the water supply or proposed improvements:

_____

_____

_____

_____

_____

_____

_____

_____

© 2013 National Fire Protection Association NFPA 25 (p. 3 of 4)

**FIGURE E.1** *Continued*

Copyright 2015 National Fire Protection Association (NFPA). Licensed, by agreement, for individual use and download on October 23, 2015 to VETERANS AFFAIRS. No other reproduction or transmission in any form permitted without written permission of NFPA. For inquires or to report unauthorized use, contact licensing@nfpa.org.



## FIRE SPRINKLER SYSTEM HAZARD EVALUATION *(continued)*

**Section 5. Hazard Evaluator's Information and Certification**

Evaluator: _____

Company: _____

Company address: _____

I state that the information on this form is correct at the time and place of my review of my evaluation.

Is this hazard evaluation completed? (Note: All "?" must be resolved.) ❑ Yes ❑ No

Explain if answer is not "yes":

_____

_____

Have deficiencies in protection been identified that should be improved or corrected? ❑ Yes ❑ No

Summarize improvements of corrections needed:

_____

_____

_____

_____

Signature of Evaluator: _____ Date: _____

License or Certification Number (if applicable): _____

© 2013 National Fire Protection Association NFPA 25 (p. 4 of 4)

**FIGURE E.1** ***Continued***

## Annex F Informational References

**F.1 Referenced Publications.** The documents or portions thereof listed in this annex are referenced within the informational sections of this standard and are not part of the requirements of this document unless also listed in Chapter 2 for other reasons.

**F.1.1 NFPA Publications.** National Fire Protection Association, 1 Batterymarch Park, Quincy, MA 02169-7471.

NFPA 13, *Standard for the Installation of Sprinkler Systems*, 2013 edition.

NFPA 13R, *Standard for the Installation of Sprinkler Systems in Low-Rise Residential Occupancies*, 2013 edition.

NFPA 14, *Standard for the Installation of Standpipe and Hose Systems*, 2013 edition.

NFPA 15, *Standard for Water Spray Fixed Systems for Fire Protection*, 2012 edition.

NFPA 16, *Standard for the Installation of Foam-Water Sprinkler and Foam-Water Spray Systems*, 2011 edition.

NFPA 20, *Standard for the Installation of Stationary Pumps for Fire Protection*, 2013 edition.

NFPA 22, *Standard for Water Tanks for Private Fire Protection*, 2013 edition.

NFPA 24, *Standard for the Installation of Private Fire Service Mains and Their Appurtenances*, 2013 edition.

*NFPA 70E®*, *Standard for Electrical Safety in the Workplace®*, 2012 edition.

*NFPA 72®*, *National Fire Alarm and Signaling Code*, 2013 edition.

NFPA 291, *Recommended Practice for Fire Flow Testing and Marking of Hydrants*, 2013 edition.

NFPA 551, *Guide for the Evaluation of Fire Risk Assessments*, 2013 edition.

NFPA 750, *Standard on Water Mist Fire Protection Systems*, 2010 edition.

NFPA 780, *Standard for the Installation of Lightning Protection Systems*, 2014 edition.

Copyright 2015 National Fire Protection Association (NFPA). Licensed, by agreement, for individual use and download on October 23, 2015 to VETERANS AFFAIRS. No other reproduction or transmission in any form permitted without written permission of NFPA. For inquires or to report unauthorized use, contact licensing@nfpa.org.



NFPA 1962, *Standard for the Care, Use, Inspection, Service Testing, and Replacement of Fire Hose, Couplings, Nozzles, and Fire Hose Appliances*, 2013 edition.

*NFPA's Future in Performance Based Codes and Standards*, July 1995.

*NFPA Performance Based Codes and Standards Primer*, December 1999.

**F.1.2 Other Publications.**

**F.1.2.1 ASTM Publications.** ASTM International, 100 Barr Harbor Drive, P.O. Box C700, West Conshohocken, PA 19428-2959.

IEEE/ASTM-SI-10, *American National Standard for Use of the International System of Units (SI): The Modern Metric System*, 2002.

**F.1.2.2 AWWA Publications.** American Water Works Association, 6666 West Quincy Avenue, Denver, CO 80235.

AWWA, *Manual of Water Supply Practices — M42 Steel Water-Storage Tanks*, 1998.

**F.1.2.3 Hydraulic Institute Publications.** Hydraulic Institute, 9 Sylvan Way, Parsippany, NJ 07054.

*Hydraulic Institute Standards for Centrifugal, Rotary and Reciprocating Pumps*, 14th edition, 1983.

**F.1.2.4 SFPE Publications.** Society of Fire Protection Engineers, 7315 Wisconsin Avenue, Suite 1225 W, Bethesda, MD, 20814.

SFPE *Engineering Guide: Fire Risk Assessment*, 2006.

**F.1.2.5 Other Publications.**

Edward K. Budnick, P.E., "Automatic Sprinkler System Reliability," *Fire Protection Engineering*, Society of Fire Protection Engineers, Winter 2001.

*Fire Protection Equipment Surveillance Optimization and Maintenance Guide*, Electric Power Research Institute, July 2003.

William E. Koffel, P.E., *Reliability of Automatic Sprinkler Systems*, Alliance for Fire Safety.

**F.2 Informational References.** The following documents or portions thereof are listed here as informational resources only. They are not a part of the requirements of this document.

**F.2.1 NFPA Publications.** National Fire Protection Association, 1 Batterymarch Park, Quincy, MA 02169-7471.

NFPA 1, *Fire Code*, 2012 edition.

**F.2.2 Other Publications.**

**F.2.2.1 AWWA Publications.** American Water Works Association, 6666 West Quincy Avenue, Denver, CO 80235.

AWWA D101, *Inspecting and Repairing Steel Water Tanks, Standpipes, Reservoirs, and Elevated Tanks, for Water Storage*, 1986.

**F.2.2.2 SSPC Publications.** Society of Protective Coatings, 40 24th Street, 6th Floor, Pittsburgh, PA 15222.

SSPC Chapter 3, "Special Pre-Paint Treatments," 1993.

SSPC-PA 1, *Shop, Field, and Maintenance Painting*, 1991.

SSPC Paint 8, *Aluminum Vinyl Paint*, 1991.

SSPC Paint 9, *White (or Colored) Vinyl Paint*, 1995.

SSPC-SP 6, *Commercial Blast Cleaning*, 1994.

SSPC-SP 8, *Pickling*, 1991.

SSPC-SP 10, *Near-White Blast Cleaning*, 1994.

**F.2.2.3 U.S. Government Publications.** U.S. Government Printing Office, Washington, DC 20402.

Bureau of Reclamation Specification VR-3.

Federal Specification TT- P-86, *Specifications for Vinyl Resin Paint*, M-54, 1995.

**F.3 References for Extracts in Informational Sections.**

NFPA 13, *Standard for the Installation of Sprinkler Systems*, 2013 edition.

NFPA 14, *Standard for the Installation of Standpipe and Hose Systems*, 2013 edition.

NFPA 15, *Standard for Water Spray Fixed Systems for Fire Protection*, 2012 edition.

NFPA 20, *Standard for the Installation of Stationary Pumps for Fire Protection*, 2013 edition.

NFPA 24, *Standard for the Installation of Private Fire Service Mains and Their Appurtenances*, 2013 edition.

Copyright 2015 National Fire Protection Association (NFPA). Licensed, by agreement, for individual use and download on October 23, 2015 to VETERANS AFFAIRS. No other reproduction or transmission in any form permitted without written permission of NFPA. For inquires or to report unauthorized use, contact licensing@nfpa.org.



# Index

Copyright © 2013 National Fire Protection Association. All Rights Reserved.

The copyright in this index is separate and distinct from the copyright in the document that it indexes. The licensing provisions set forth for the document are not applicable to this index. This index may not be reproduced in whole or in part by any means without the express written permission of NFPA.

## -A-

**Accessibility** ..... 4.1.3, 5.2.1.1.5, 5.2.2.4, 13.2.3, A.4.1.3, A.13.2.3
**Adjust (definition)** ..... 3.3.1
**Adjustments** .....*see* Repairs, reconditioning, replacements, or adjustments
**Alarm devices** .....*see also* Waterflow alarm devices
False alarms .....*see* Supervisory service, notification to
Fire pumps ..... 8.1.5, A.8.1.5
Foam-water sprinkler systems ..... Table 11.5.1, Table A.3.3.7
Inspection ..... Table 5.1.1.2
Private fire service mains ..... Table 7.5.1
Sprinkler systems ... 5.2.5, 5.3.3, Table 5.5.1, 16.2.1.1.3, 16.2.1.1.4, Table A.3.3.7, A.5.3.3.2, A.5.3.3.5, A.5.4.2
Standpipe and hose systems ..... 6.3.3, Table 6.5.1
Valves ..... 13.2.6, 13.4.3.2.13, 13.4.3.2.14, 13.4.3.3.1, 13.4.4.1.1.1, 13.4.4.1.1.2, 13.4.4.1.2.4, 13.4.4.2.6, 13.4.4.2.7, 13.4.4.2.9(2), Table 13.8.1
Water spray systems ..... Table 10.5.1
Water tanks .....*see* Water tanks
**Alarm receiving facility (definition)** ..... 3.3.2, A.3.3.2
**Alarm valves** ..... Table 13.1.1.2, 13.4.1, Table A.3.3.7, A.13.1, A.13.4.1.1, A.13.4.1.2
**Antifreeze sprinkler systems** ..... 4.1.9.1, 4.1.9.2(3), 5.3.4, Table A.3.3.7, A.5.3.4
Antifreeze solution ..... Table 5.1.1.2, 5.3.4, Table 5.5.1, 16.2.1.1.12, A.5.3.4
Control valve information sign .....*see* Information signs
Definition ..... 3.6.4.1
Premixed antifreeze solution ..... 5.3.4.2.2, 5.3.4.4.1, 5.3.4.4.2, A.5.3.4.2.1(1)
Definition ..... 3.6.4.1.1
**Application of standard** ..... 1.3, A.1.3
**Approved (definition)** ..... 3.2.1, A.3.2.1
**Asian clams, obstruction by** ..... D.2.4, D.4.4
**Authority having jurisdiction (definition)** ..... 3.2.2, A.3.2.2
**Automatic detection equipment** .... Table 10.1.1.2, 10.2.3, 10.3.3.1.1, 10.3.3.2, 10.4.2, Table 11.1.1.2, 11.2.2, 11.3.2.4
Component action requirements ..... Table 5.5.1, Table 10.5.1, Table 11.5.1
Definition ..... 3.3.3, A.3.3.3
**Automatic operation**
Definition ..... 3.3.4, A.3.3.4
Standpipe system (definition) ..... 3.3.41.1
**Automatic transfer switch (definition)** ..... 3.3.5

## -B-

**Backflow prevention assemblies** ..... Table 10.1.1.2, Table 13.1.1.2, 13.2.5.2, 13.6, Table 13.8.1, Table A.3.3.7, A.13.1, A.13.6.1.2.2 to A.13.6.2.1; *see also* Reduced-pressure principle backflow prevention assemblies (RPBA)
**Ball valves** ..... Table 11.5.1, A.13.1
**Biological growth, obstruction caused by** ..... D.2.4; *see also* Microbiologically influenced corrosion (MIC)
**Bladder tank proportioners** ..... Table 11.1.1.2, 11.2.9.5.2, 11.4.4, Table 11.5.1, Table A.3.3.7, A.11.2.9.5.2.1, A.11.4.4.2
Definition ..... 3.3.33.1, A.3.3.33.1, Fig. A.3.3.33.1
**Buildings**
Inspection of ..... Table 5.1.1.2
Temperature of ..... 4.1.2.1

## -C-

**Calcium carbonate, obstruction by** ..... D.2.5, D.4.5
**Changes**
In hazard ..... 4.1.7, A.4.1.7
In occupancy, use, process, or materials ..... 4.1.6, A.4.1.6
**Check valves** ..... Table 9.1.1.2, Table 10.1.1.2, Table 13.1.1.2, 13.4.2, Table 13.8.1, 14.3.1(3), A.13.1; *see also* Double check valve assembly (DCVA)
**Clean (definition)** ..... 3.3.6
**Cold weather** .....*see* Freezing conditions or cold weather
**Combined standpipe and sprinkler systems (definition)** ..... 3.6.1
**Commercial-type cooking equipment, sprinklers and nozzles for** ..... 5.4.1.7, 12.2.2.7
**Concealed spaces, sprinklers in** ..... 5.2.1.1.4, 5.2.2.3, A.5.2.1.1.4, A.5.2.2.3
**Concealed sprinklers** ..... 5.2.1.1.6
Definition ..... 3.3.40.1.1
**Confined spaces, entry to** ..... 4.9.2
**Connections**
Fire department .....*see* Fire department connections
Flushing ..... D.5.1
Hose .....*see* Hose connections
Test ..... Table 5.5.1
**Controllers, pump** ..... 8.1.9, A.8.1.9, C.3
**Control mode specific application (CMSA) sprinklers (definition)** ..... 3.3.40.2, A.3.3.40.2
**Control valves** ..... 4.1.9.1, 13.3, A.13.1, A.13.3.1 to A.13.3.3.5
Component action requirements ..... Table 6.5.1, Table 13.8.1
Definition ..... 3.5.1, A.3.5.1
Impairments, signs indicating ..... 10.1.6.2
Information signs .....*see* Information signs
Inspection ..... Table 5.1.1.2, Table 6.1.1.2, Table 9.1.1.2, Table 10.1.1.2, Table 12.1.2, Table 13.1.1.2, 13.3.2, 16.2.1.1.1, A.13.3.2.2
Maintenance .....*see* Maintenance, valves
Obstruction investigations, closure during ..... D.3
Testing .....*see* Testing, valves
**Conventional pin rack** .....*see* Hose storage devices
**Corrective action** ..... 4.1.5, 4.2, A.4.1.5
**Corrosion** ..... Table A.3.3.7; *see also* Microbiologically influenced corrosion (MIC)
Corrosion-resistant sprinklers ..... A.5.4.1.5
Definition ..... 3.3.40.3
Corrosive atmospheres or water supplies ..... 5.3.1.1.2, A.5.3.1.1.2
Foam-water sprinkler systems ..... Table 11.1.1.2
Obstruction due to corrosion products ..... 14.3.1(12), D.1, D.2.1, D.2.6, D.5.2
Piping ..... Table 7.2.2.1.2, Table 7.2.2.3, A.5.4.2
Sprinkler systems ..... 5.2.1.1.1, 5.2.1.1.2(2), 5.2.2.1, A.5.2.1.1.1, A.5.2.1.1.2(2), A.5.2.2.1, A.5.4.2
Standpipe and hose systems ..... 6.1.3
Water mist nozzles ..... 12.1.2.3.2, A.12.1.2.3
Water spray systems ... 10.2.3.2, 10.2.4.1(2), 10.2.4.2(1), 10.3.6.1.1
Water tanks ..... 9.2.6.3, 9.2.6.4, 9.2.7(3), 9.2.7(5)
**Coverplates** ..... 5.2.1.1.6, Table A.3.3.7

## -D-

**Deficiency**
Critical ..... A.3.3.7
Definition ..... 3.3.7.1
Definition ..... 3.3.7, A.3.3.7
Noncritical ..... A.3.3.7

Copyright 2015 National Fire Protection Association (NFPA). Licensed, by agreement, for individual use and download on October 23, 2015 to VETERANS AFFAIRS. No other reproduction or transmission in any form permitted without written permission of NFPA. For inquires or to report unauthorized use, contact licensing@nfpa.org.




Definition ..... 3.3.7.2
**Definitions** ..... Chap. 3
**Deflectors, clearance to storage of** ..... 5.2.1.2, 5.2.1.3, A.5.2.1.2, A.5.2.1.3
**Deluge sprinkler systems** ..... Table 5.1.1.2, 5.2.4.1, A.5.2.4.1; *see also* Deluge valves
Definition ..... 3.6.4.2
Foam-water sprinkler and foam-water spray systems (definitions) ..... 3.4; *see also* Foam-water sprinkler systems
**Deluge valves** ..... :Table 13.1.1.2, 13.4.3, Table 13.8.1, Table A.3.3.7, A.13.1, A.13.4.3.2.1 to A.13.4.3.3.3
Definition ..... 3.5.2, A.3.5.2
Foam-water sprinkler systems ..... 11.2.1
Water spray systems ..... Table 10.1.1.2, Table 10.1.1.2, 10.2.1.5, 10.2.2
**Detection equipment, automatic** ..... *see* Automatic detection equipment
**Discharge devices**
Definition ..... 3.3.8
Foam-water ..... Table 11.1.1.2, 11.2.5, Table 11.5.1, Table A.3.3.7, A.11.2.5
**Discharge patterns**
Deluge and preaction systems ..... 13.4.3.2.2.6
Foam-water sprinkler systems ..... 11.3.2.6
Water spray systems ..... 10.3.3.3, A.10.3.3.3
**Discharge time**
Foam-water sprinkler systems ..... 11.3.2.5
Water spray systems ..... 10.3.3.2
**Double check detector assembly (DCDA)** ..... 13.6.1.1
**Double check valve assembly (DCVA)** ..... 13.6.1.1, A.13.1
Definition ..... 3.3.9
**Drainage**
Foam-water sprinkler systems ... Table 11.1.1.2, 11.2.8, Table A.3.3.7
Valves, open ..... 13.2.4
Water spray systems ..... 10.2.8, 10.3.6.1, Table A.3.3.7
**Drains**
Auxiliary ..... 4.1.9.2(2), 4.6.3, 13.4.4.1.3
Component action requirements ..... Table 5.5.1, Table 6.5.1, Table 10.5.1, Table 11.5.1
Fire department connections ..... 13.7.1(7)
Low point ..... Table 5.1.1.2, 10.3.6.1
Main ..... *see* Main drains
Sectional ..... 13.3.1.2.1
Definition ..... 3.3.10.2, A.3.3.10.2
Tests ..... 14.3.1(4)
**Drip valves** ..... Table 11.5.1, A.13.1
**Driver, pump** ..... 8.1.8
**Dry barrel hydrants** ..... Table 7.1.1.2, 7.2.2.4, 7.3.2.3, 7.3.2.6, Table A.3.3.7
Definition ..... 3.3.12.1, A.3.3.12.1
**Dry pipe sprinkler systems** ..... 4.1.9.1, 4.1.9.2(2), 14.3.1(15); *see also* Dry pipe valves
Control valve information sign ..... *see* Information signs
Conversion to wet pipe systems of ..... A.5.4.2
Definition ..... 3.6.4.3
Gauges ..... Table 5.1.1.2, 5.2.4.2, 5.2.4.4, A.5.2.4.4
Inspection ..... Table 5.1.1.2, 16.2.1.1.15
Maintenance ..... 5.4.2, 16.2.1.1.15, A.5.4.2
Obstructions ..... D.2.1, D.3.2, D.3.3, D.4.1, D.5.2, D.5.4
Testing ..... 16.2.1.1.15
**Dry pipe valves** ..... 5.2.4.4, Table 13.1.1.2, 13.4.4, Table 13.8.1, 14.3.1(3), 14.3.1(10), Table A.3.3.7, A.5.2.4.4, A.13.1, A.13.4.4.1.2.3 to A.13.4.4.3.2
**Dry sprinklers** ..... 5.3.1.1.1.6, 5.4.1.5.3, 16.2.1.1.11, A.5.3.1.1.1.6
Definition ..... 3.3.40.4
**Dry standpipe system** ..... *see* Standpipe and hose systems

**-E-**

**Early suppression fast-response (EFSR) sprinkler (definition)** ..... 3.3.40.5
**Electrical safety** ..... 4.9.6, A.4.9.6
**Emergency impairments** ..... 15.6, A.15.6
Definition ..... 3.3.21.1, A.3.3.21.1
**Escutcheons** ..... 5.2.1.1.6, 5.2.1.1.7, Table A.3.3.7
**Exposed piping, private fire service mains**
Inspection ..... Table 7.1.1.2, 7.2.2.1, Table A.3.3.7
Testing ..... Table 7.1.1.2, 7.3.1, Table A.3.3.7, A.7.3.1
**Extended coverage sprinkler (definition)** ..... 3.3.40.6

**-F-**

**Fall protection** ..... 4.9.3
**False alarms** ..... *see* Supervisory signal devices
**Fire department connections** ..... Table 5.1.1.2, 5.1.2, 6.3.2.1, Table 13.1.1.2, 13.7, 14.3.1(13), Table A.3.3.7, A.6.3.2.1, A.13.7.1(9)
Component action requirements ..... Table 5.5.1, Table 10.5.1, Table 11.5.1, Table 13.8.1
Definition ..... 3.3.11
Flushing outlets, used as ..... D.5.1
Impairments, signs indicating ..... 10.1.6.2
Inspections ..... *see* Inspections
Maintenance ..... *see* Maintenance
Testing ..... *see* Testing
Water-spray fixed systems ..... 10.1.5
**Fire hose, maintenance of** ..... 7.1.4; *see also* Standpipe and hose systems
**Fire hydrants** ..... Table 7.5.1
Definition ..... 3.3.12, A.3.3.12, Fig. A.3.3.12(a), Fig. A.3.3.12(b)
Dry barrel ..... *see* Dry barrel hydrants
Inspection ..... Table A.3.3.7
Maintenance ..... Table 7.1.1.2, 7.4.2, A.7.4.2.2
Monitor nozzle (definition) .... 3.3.12.2, A.3.3.12.2, Fig. A.3.3.12.2
Testing ..... Table 7.1.1.2, 7.3.2, Table A.3.3.7
Wall ..... *see* Wall hydrants
Wet barrel ..... *see* Wet barrel hydrants
**Fire pumps** ..... Chap. 8, 14.3.1(1), 14.3.1(3)
Auxiliary equipment ..... 8.1.5, A.8.1.5
Controllers ..... 8.1.9, Table 8.6.1, A.8.1.9, C.3
Definition ..... 3.6.2
Diesel engine systems ..... Table 8.1.1.2, Table 8.1.2, 8.2.2(4), 8.3.1.1, 8.3.2.4, 8.3.2.9(3), 8.3.4, Table 8.6.1, Table A.3.3.7, A.8.3.1.1, Table A.8.3.2.9, A.8.3.4.1.1, A.8.3.4.2
Driver ..... 8.1.8, Table 8.6.1, Table 10.1.1.2
Electrical system ..... Table 8.1.1.2, Table 8.1.2, 8.2.2(3), 8.3.1.2, 8.3.2.3, 8.3.2.9(2), Table 8.6.1, Table 10.1.1.2, Table A.3.3.7, A.8.3.1.2
Emergency or standby power generators ..... 8.3.6.1
Energy source ..... 8.1.7, 8.3.6.1
Engine speed ..... 8.3.7.2, A.8.3.7.2.1
Foam-water sprinkler systems ..... 11.1.2
Impairments ..... 5.3.3.4, 8.1.10
Inspections ..... *see* Inspections
Maintenance ..... *see* Maintenance
Obstruction investigation ..... D.3
Positive displacement pumps, testing of ..... 8.3.5, Table 8.6.1
Problems, possible causes of ..... Annex C
Relief valves ..... *see* Relief valves (fire pump)
Reports ..... 8.4
Steam systems ..... 8.2.2(5), 8.3.2.9(4), Table 8.6.1, Table 10.1.1.2, A.8.2.2(5)
Testing ..... 8.1, Table 8.1.1.2, Table 8.1.2, 8.3, 8.4, Table 10.1.1.2, Table 12.1.2, Table A.3.3.7, A.8.1, A.8.3
Annual ..... 8.3.3, Table A.3.3.7, A.8.3.3.1 to A.8.3.3.8
Component replacement testing requirements ..... 8.6
At each flow condition ..... 8.3.3.1, 8.3.3.2(2), A.8.3.3.1
At no-flow condition (churn) ..... 8.3.2, 8.3.3.1, 8.3.3.2(1), A.8.3.2.1 to A.8.3.2.9
Results and evaluation ..... 8.3.7, A.8.3.7.1 to A.8.3.7.4
Water spray systems ..... 10.2.9
Water supply
Pump suction ..... 8.1.6

Copyright 2015 National Fire Protection Association (NFPA). Licensed, by agreement, for individual use and download on October 23, 2015 to VETERANS AFFAIRS. No other reproduction or transmission in any form permitted without written permission of NFPA. For inquires or to report unauthorized use, contact licensing@nfpa.org.




Status during inspection, testing, and maintenance ..... 4.4
**Fire watch** ..... 15.5.2(4)(b), A.15.5.2(4)(b)
**Fittings** ..... *see* Piping
**Fixed nozzle systems** ..... *see* Water spray systems
**Flow tests**
Obstruction investigation ..... 14.3.1(15)
Private fire service mains ..... Table 7.1.1.2, 7.3.1, 7.3.2, A.7.3.1
Standpipe and hose systems ..... Table 6.1.1.2, 6.3.1, A.6.3.1.1 to A.6.3.1.2.2
Valves ..... 13.4.3.2.2, 13.4.4.2.2.3, 13.5.1.2, 13.5.2.2, 13.5.2.3, 13.5.3.2, 13.5.3.3, 13.5.4.2, 13.5.4.3, A.13.4.3.2.2, A.13.4.4.2.2.3, A.13.5.1.2, A.13.5.2.2, A.13.5.4.2, A.13.5.4.3
Fire pump ..... 13.5.7.2.3
**Flushing procedures** ..... Table 10.1.1.2, 14.3.1(8), D.4.2, D.5
**Flush sprinklers** ..... 5.2.1.1.6
Definition ..... 3.3.40.1.2
**Foam concentrates** ..... Table A.3.3.7
Definition ..... 3.3.13, A.3.3.13
Samples ..... 11.2.10
Testing ..... 11.3.5
**Foam discharge devices** ..... 11.2.5, A.11.2.5
Definition ..... 3.3.14
**Foam-water spray system (definition)** ..... 3.4.1; *see also* Foam-water sprinkler systems
**Foam-water sprinkler systems** ..... Chap. 11
Component action requirements ..... 11.5
Definition ..... 3.4.2
Impairments ..... 11.1.6
Inspections ..... *see* Inspections
Maintenance ..... 11.1, 11.4, A.11.4
Proportioners ..... *see* Proportioners
Return to service after testing ..... 11.3.6
Testing ..... 11.1, 11.3, Table A.3.3.7, A.11.3
**Freezers, systems protecting** ..... 5.2.4.4, 13.4.3.2.5, 13.4.4.2.2.1, 14.4, A.5.2.4.4
**Freezing conditions or cold weather** ..... 4.1.2, 16.2.1.1.9, Table A.3.3.7, A.4.1.2; *see also* Antifreeze sprinkler systems
Ice obstruction prevention ..... 14.4
Standpipe and hose systems ..... 6.3.3.2
Valves ..... 13.4.3.1.1, 13.4.3.3.3, 13.4.4.1.1, 13.4.4.3.2, A.13.4.3.3.3, A.13.4.4.3.2
Water spray systems ..... 10.3.6.1.1
Water tanks ..... 9.2.4.2, 9.2.4.3, 9.2.5.2(3), 9.3.3, 9.4.3, A.9.2.1.1
**Frequency** ..... *see* ITM task frequencies
**Frostproof hydrants** ..... *see* Dry barrel hydrants

**-G-**

**Gauges** ..... 13.4.3.1.3 to 13.4.3.1.5, A.4.1.5.1
Component action requirements ..... Table 5.5.1, Table 6.5.1, Table 7.5.1, Table 10.5.1, Table 11.5.1, Table 13.8.1
Fire pumps ... 8.1.5, 8.2.2(5), 8.3.2.8, 8.3.2.9(1), A.8.1.5, A.8.2.2(5)
Sprinkler systems ..... Table 5.1.1.2, 5.2.4, 5.3.2, 16.2.1.1.2, Table A.3.3.7, A.5.2.4.1, A.5.2.4.4, A.5.3.2
Standpipe and hose systems ..... Table 6.1.1.2, 6.2.2, 6.3.1.5.2, 6.3.4, A.6.3.4
Valves ..... 13.2.7, 13.4.1.1(1), 13.4.4.1.2, Table A.3.3.7, A.13.4.4.1.2.3
Water tanks ..... Table 9.1.1.2, 9.3.6, Table 9.6.1, Table A.3.3.7, A.9.3.6

**-H-**

**Hangers** ..... A.4.1.5.1
Component action requirements ..... Table 10.5.1
Foam-water sprinkler systems ..... Table 11.1.1.2, 11.2.4, Table 11.5.1, Table A.3.3.7
Sprinkler systems ..... Table 5.1.1.2, 5.2.3, 16.2.1.1.8, Table A.3.3.7, A.5.2.3
Standpipe and hose systems ..... Table 6.5.1
Water spray systems ..... 10.2.4.2, Table A.3.3.7, A.10.2.4.2
**Hazard evaluations** ..... 4.1.7.1, 4.1.7.2, Annex E
**Hazardous materials** ..... 4.9.5, A.4.9.5
**Hazards** ..... 4.1.7, 4.9.4, A.4.1.7
**Heat tape** ..... 4.1.9.2(4)
**Heat tracing** ..... 5.2.7
**Horizontal rack** ..... *see* Hose storage devices
**Hose** ..... *see* Fire hose; Standpipe and hose systems
**Hose connections** ..... 5.1.5
Definition ..... 3.3.15
Pressure-reducing valves ..... Table 13.1.1.2, Table A.3.3.7
Pressure-regulating valves ..... 13.5.2, A.13.5.2.2
Standpipe and hose systems ..... Table 6.1.1.2, Table 6.1.2
**Hose houses** ..... Table 6.5.1, Table 7.1.1.2, 7.2.2.7, Table 7.5.1, Table A.3.3.7
Definition ..... 3.3.16, A.3.3.16, Figs. A.3.3.16(a) to (c)
**Hose nozzles** ..... Table 6.1.1.2, Table 6.1.2, Table A.3.3.7
Definition ..... 3.3.17
**Hose reel** ..... *see* Hose storage devices
**Hose station (definition)** ..... 3.3.18
**Hose storage devices** ..... Table 6.1.1.2, Table 6.1.2, Table 6.5.1, Table A.3.3.7
Conventional pin rack (definition) ..... 3.3.19.1, A.3.3.19.1, Fig. A.3.3.19.1
Horizontal rack (definition) ... 3.3.19.2, A.3.3.19.2, Fig. A.3.3.19.2
Hose reel (definition) ..... 3.3.19.3, A.3.3.19.3, Fig. A.3.3.19.3
Semiautomatic hose rack assembly (definition) ..... 3.3.19.4, A.3.3.19.4, Fig. A.3.3.19.4
**Hose valves** ..... 13.3.1.5, 13.5.6, 13.5.8, Table 13.8.1, A.13.5.6.2.2
Definition ..... 3.5.3
**Hydrants, fire** ..... *see* Fire hydrants
**Hydraulic design information signs** ..... *see* Information signs
**Hydraulic nameplate** ..... Table 5.1.1.2
**Hydraulic placards** ..... Table 5.5.1, Table 6.5.1, Table 11.5.1
**Hydrostatic tests** ..... Table 6.1.1.2, 6.3.2, 13.7.4, A.6.3.2.1
Definition ..... 3.3.20

**-I-**

**Ice obstruction prevention** ..... 14.4; *see also* Freezers, systems protecting; Freezing conditions or cold weather
**Impairment coordinator** ..... 15.5, A.15.5
**Impairments** ..... 4.1.10, Chap. 15; *see also* System shutdown
Coordinator ..... 15.2
Definition ..... 3.3.21, A.3.3.21, A.3.3.21.1
Emergency ..... 15.6, A.15.6
Definition ..... 3.3.21.1
Equipment involved ..... 15.4
Fire pumps ..... 5.3.3.4, 8.1.10
Foam-water sprinkler systems ..... 11.1.6
Preplanned
Definition ..... 3.3.21.2
Preplanned programs ..... 15.5, A.15.5
Private fire service mains ..... 7.1.5
Restoring systems to service ..... 15.7, A.15.7
Sprinkler systems ..... 5.1.4, 5.3.3.4
Standpipe and hose systems ..... 6.1.6
Tag system .... 4.1.10.1, 15.3, 15.5.2(8), 15.7(5), A.15.3.1, A.15.3.2
Water spray systems ..... 10.1.6, A.10.1.6
Water tanks ..... 9.1.4
**Information signs** ..... 4.1.9, 5.2.8, 5.2.9, Table 5.5.1, Table 6.5.1, Table 7.5.1, 10.1.6.2, Table 10.5.1, Table 11.5.1, 13.3.1, 13.4.4.1.3, 13.4.4.2.5, Table 13.8.1, A.5.2.9, A.13.3.1
Hydraulic design ..... 5.2.6, 6.2.3, Table A.3.3.7, A.5.2.6, A.6.2.3 *see also* Hydraulic placards
Tag impairment system ..... 15.3, 15.5.2(8), 15.7(5), A.15.3.1, A.15.3.2
**In-line balanced pressure proportioners** ... Table 11.1.1.2, 11.2.9.5.5, 11.4.7, Table A.3.3.7, A.11.2.9.5.5(1), A.11.2.9.5.5(2)
Definition ..... 3.3.33.2, A.3.3.33.2, Fig. A.3.3.33.2
**In-rack sprinklers** ..... 5.2.1.2.5

Copyright 2015 National Fire Protection Association (NFPA). Licensed, by agreement, for individual use and download on October 23, 2015 to VETERANS AFFAIRS. No other reproduction or transmission in any form permitted without written permission of NFPA. For inquires or to report unauthorized use, contact licensing@nfpa.org.



**Inspection, testing, and maintenance service (definition)** ..... 3.3.24, A.3.3.24
**Inspections** ..... 4.5, Table A.3.3.7, A.4.5; *see also* Impairments; System shutdown, notification of
Backflow prevention assemblies .... 13.6.1, A.13.6.1.2.2, A.13.6.1.4
Definition ..... 3.3.23
Fire department connections ..... 6.1.4, 7.1.2, 8.1.3, 9.1.2, 10.1.5, 13.7, A.13.7.1(9)
Fire hydrants ..... Table A.3.3.7
Fire pumps ..... 8.1, Table 8.1.1.2, Table 8.1.2, 8.2, 8.4.1, Table 10.1.1.2, 10.2.6.1, Table 12.1.2, Table 13.1.1.2, Table A.3.3.7, A.8.1, A.8.2.2
Foam-water sprinkler systems ..... 11.1, Table 11.1.1.2, 11.2, Table A.3.3.7, A.11.2.5 to A.11.2.9.5.6(2)
Forms for ..... Annex B
Obstructions ..... 14.2, A.14.2.1, A.14.2.2
Owner/occupant responsibilities ..... 4.1.1 to 4.1.5, 4.9.5.2
Performance-based programs ..... 4.7, A.4.7
Private fire service mains .... 7.1, 7.2, 10.2.6.1, Table A.3.3.7, A.7.2.2
Records ..... *see* Records
Return to service, ..... 4.1.10.2
Sprinklers ..... Table 5.1.1.2, 5.2.1, 16.2.1.1.6, Table A.3.3.7, A.5.2.1.1 to A.5.2.1.3
Sprinkler systems ..... 5.1, 5.2, 16.1, 16.2, Table A.3.3.7, A.5.2, A.16.1.1.1, A.16.1.1.2
Standpipe and hose systems ..... 6.1, Table 6.1.1.2, 6.2, Table A.3.3.7, A.6.2.3
Steam system conditions ..... 8.2.2(5), A.8.2.2(5)
Valves ..... Table 5.1.1.2, 5.1.2, 6.1.4, 7.1.2, 8.1.3, 9.1.2, 10.1.5, Table 12.1.2, 13.1, Table A.3.3.7, A.13.1
Alarm ..... 13.4.1, A.13.4.1.1, A.13.4.1.2
Automatic tank fill valves ..... 9.5.1
Check ..... 13.4.2.1
Control ..... Table 5.1.1.2, Table 6.1.1.2, Table 9.1.1.2, Table 10.1.1.2, Table 12.1.2, Table 13.1.1.2, 13.3.2, 16.2.1.1.1, A.13.3.2.2
Deluge ..... 13.4.3.1
Dry pipe/quick opening devices ..... 13.4.4.1, A.13.4.4.1.2.3
Fire pump relief ..... 13.5.7
Hose ..... 13.5.6.1
Preaction ..... 13.4.3.1
Pressure-reducing ..... 13.5.1, 13.5.5.1, A.13.5.1.2
Pressure-regulating ..... 13.5.2, 13.5.3.1, 13.5.4.1, A.13.5.2.2, A.13.5.4.1
Water mist systems ..... 12.1, A.12.1.2.1.1(5) to A.12.1.2.4
Water spray systems ..... *see* Water spray systems
Water supply status during ..... 4.4
Water tanks ..... 9.1, 9.2, 9.5.1, Table 10.1.1.2, 10.2.6.1, Table A.3.3.7, A.9.1, A.9.2.1.1 to A.9.2.6.5
**Inspector's test connections** ..... 14.3.1(4)
**ITM task frequencies**
Frequencies
Definitions ..... 3.7.1, A.3.7.1

**-L-**

**Line proportioners** ..... Table 11.1.1.2, 11.2.9.5.3, 11.4.5, Table A.3.3.7, A.11.2.9.5.3(1), A.11.2.9.5.3(2)
Definition ..... 3.3.33.3, A.3.3.33.3, Fig. A.3.3.33.3
**Listed (definition)** ..... 3.2.3, A.3.2.3

**-M-**

**Main drains** ..... Table 13.8.1
Component action requirements ..... Table 5.5.1, Table 6.5.1, Table 10.5.1
Definition ..... 3.3.10.1
Test ..... Table 5.1.1.2, Table 6.1.1.2, 6.3.1.5, Table 11.5.1, Table 13.1.1.2, 13.2.5, 13.3.1.2.1, 13.3.3.4, Table A.3.3.7, A.13.2.5
**Mainline strainers** ..... Table A.3.3.7
Foam-water sprinkler systems ..... 11.2.7.1
Private fire service mains ..... Table 7.1.1.2, 7.2.2.3, Table 7.5.1, A.7.2.2.3
Water spray systems ..... 10.2.1.7, 10.2.7.1, A.10.2.7
**Mains**
Broken ..... 14.3.1(9)
Flushing ..... 14.3.1(8)
Private fire service ..... *see* Private fire service mains
Yard ..... 14.3.1, A.14.3.1, D.3, D.5.1
**Maintenance** ..... 4.8, A.4.8; *see also* Impairments
Backflow prevention assemblies ..... 13.6.3
Definition ..... 3.3.25
Fire department connections ..... 6.1.4, 7.1.2, 8.1.3, 9.1.2, 10.1.5
Fire hydrants ..... Table 7.1.1.2, 7.4.2, A.7.4.2.2
Fire pumps ..... 8.1, 8.3.4, 8.5, Table 10.1.1.2, 10.2.6.1, Table 12.1.2, A.8.1, A.8.3.4.1.1, A.8.3.4.2, A.8.5.1
Foam-water sprinkler systems ..... 11.1, 11.4, A.11.4
Forms for ..... Annex B
Owner/occupant responsibilities ..... 4.1.1 to 4.1.5, 4.9.5.2, A.4.1.1 to A.4.1.5
Performance-based programs ..... 4.7, A.4.7
Private fire service mains ..... 7.1, 7.4, 10.2.6.1, A.7.4.2.2
Records ..... *see* Records
Sprinklers ..... 5.4.1, A.5.4.1.2 to A.5.4.1.8.1
Sprinkler systems ..... 5.1, 5.4, 16.1, 16.2, A.5.4.1.2 to A.5.4.3, A.16.1.1.1, A.16.1.1.2
Standpipe and hose systems ..... 6.1, Table 6.1.1.2, 6.4
Valves ..... Table 5.1.1.2, 5.1.2, Table 6.1.1.2, 6.1.4, 7.1.2, 8.1.3, 9.1.2, 10.1.5, Table 12.1.2, 13.1, 16.2.1.1.14, A.13.1
Alarm ..... 13.4.1.3
Automatic tank fill valves ..... 9.5.2
Check ..... 13.4.2.2
Control ..... Table 6.1.1.2, Table 9.1.1.2, Table 12.1.2, 13.3.4
Deluge ..... 13.4.3.3, A.13.4.3.3.3
Dry pipe/quick- opening devices ..... 13.4.4.3, A.13.4.4.3.2
Hose ..... 13.5.6.3, 13.5.8
Preaction ..... 13.4.3.3, A.13.4.3.3.3
Water mist systems .... Table 12.1.2, 12.2, A.12.2.1.5 to A.12.2.2.5.2
Water spray systems ..... *see* Water spray systems, inspection and maintenance procedures
Water supply status during ..... 4.4
Water tanks ..... 9.1, Table 9.1.1.2, 9.4, 9.5.2, 10.2.6.1, Table 12.1.2, Table 12.2.1.7, A.9.1
**Manual operation**
Definition ..... 3.3.26
Foam-water sprinkler systems .... Table 11.1.1.2, 11.3.4, Table 11.5.1
Preaction and deluge valves ..... 13.4.3.2.9
Standpipe and hose systems ..... 6.3.2.1, Table A.3.3.7, A.6.3.2.1
Definition ..... 3.3.41.3
Water spray systems ..... 10.3.5
**Marine sprinkler systems** ..... 5.4.3, A.5.4.3
Definition ..... 3.6.4.4
**Master pressure-reducing valve** ..... A.3.5.5.1
Definition ..... 3.5.5.1
**Master pressure-regulating valve** ..... 13.5.4, A.13.5.4.1 to A.13.5.4.3
**Materials, changes in** ..... 4.1.6, A.4.1.6
**Measurement, units of** ..... 1.4, A.1.4
**Microbiologically influenced corrosion (MIC)** ..... Table A.3.3.7, D.1, D.2.1, D.2.6, D.2.7
**Monitor nozzle hydrant (definition)** ..... 3.3.12.2, A.3.3.12.2, Fig. A.3.3.12.2
**Monitor nozzles**
Component action requirements ..... Table 7.5.1
Definition ..... 3.3.27.1, A.3.3.27.1, Fig. A.3.3.27.1(a), Fig. A.3.3.27.1(b)
Inspection ..... Table 7.1.1.2, 7.2.2.6, Table A.3.3.7
Maintenance ..... Table 7.1.1.2, 7.4.3
Testing ..... Table 7.1.1.2, 7.3.3
**Multiple systems, testing** ..... 10.3.4, 11.3.3, 13.4.3.2.8

Copyright 2015 National Fire Protection Association (NFPA). Licensed, by agreement, for individual use and download on October 23, 2015 to VETERANS AFFAIRS. No other reproduction or transmission in any form permitted without written permission of NFPA. For inquires or to report unauthorized use, contact licensing@nfpa.org.



## -N-


**Notification, out of service** ..... 15.5.2(5) to 15.5.2(7); *see also* System shutdown, notification of
Sprinkler system ..... 4.1.4
Valves ..... 13.2.2
Water spray systems ..... 10.1.6.1
**Nozzles**
Hose .....*see* Hose nozzles
Monitor .....*see* Monitor nozzles
Sprinkler (definition) ..... 3.3.40.7
Water mist ..... 12.1.2.1 to 12.1.2.4.1, 12.2.2, A.12.1.2.1.1(5) to A.12.1.2.4
Water spray .....*see* Water spray nozzles


## -O-


**Obstructions**
Ice ..... 14.4
Inspection ..... 14.2, A.14.2.1, A.14.2.2
Fire department connections ..... 13.7.3
Investigation ..... Table 5.1.1.2, 5.1.3, 6.1.5, 7.1.3, 14.3, Table A.3.3.7, A.14.3.1 to A.14.3.2.3, Annex D
Fire pumps ..... 8.1.4
Foam-water sprinkler systems ..... 11.1.5
Procedure ..... D.3
Sources of obstruction ..... D.2
Water-spray fixed systems ..... 10.1.4
Water tanks ..... 9.1.3
Prevention ..... 10.2.6.2, 14.3, A.5.4.2, A.10.2.6.2, A.14.3.1 to A.14.3.2.3, D.4
Valve testing ..... 13.4.3.2.2.6
**Occupancy, changes in** ..... 4.1.6, A.4.1.6
**Old-style/conventional sprinklers** ..... 5.4.1.2.1, A.5.4.1.2.1
Definition ..... 3.3.40.8
**Open sprinkler (definition)** ..... 3.3.40.9
**Operation**
Automatic (definition) ..... 3.3.4, A.3.3.4
Manual .....*see* Manual operation
**Orifice plate proportioning** ..... 11.2.9.5.6, Table A.3.3.7, A.11.2.9.5.6(1), A.11.2.9.5.6(2)
Definition ..... 3.3.28
**Ornamental/decorative sprinkler (definition)** ..... 3.3.40.10
**Owner/occupant responsibilities** ..... 4.1, 4.9.5.2, 13.2.1, 15.2, 15.5.2(3), A.4.3.1


## -P-


**Painted sprinklers** ..... 5.2.1.1.1, 5.2.1.1.2(6), 5.4.1.6, 12.2.2.6, Table A.3.3.7, A.5.2.1.1.1, A.5.4.1.6, A.12.1.2.3
**Pendent sprinklers** ..... 5.2.1.1.7, 16.2.1.1.11, A.5.2.1.1.3, A.5.4.1.2.1, D.2.5, D.5.2
Definition ..... 3.3.40.1.3
**Performance-based program (definition)** ..... 3.3.29
**Performance-based programs** ..... 4.7, A.4.7
**Piers, sprinklers for** ..... 5.4.1.2.2
**Piping**
Assessment of internal condition ..... 14.2, A.14.2.1, A.14.2.2
Flushing ..... Table 10.1.1.2, 14.3.1(8), D.4.2, D.5
Foam-water sprinkler systems ..... Table 11.1.1.2, 11.2.3, Table 11.5.1, Table A.3.3.7
Obstructions .....*see* Obstructions
Private fire service mains ..... Table 7.5.1, Table A.3.3.7
Exposed .....*see* Exposed piping, private fire service mains
Underground ..... Table 7.1.1.2, 7.2.2.2, 7.3.1, A.7.2.2.2, A.7.3.1
Sprinkler systems ..... Table 5.1.1.2, 5.2.2, Table 5.5.1, 16.2.1.1.7, Table A.3.3.7, A.5.2.2, D.3 to D.5
Standpipe and hose systems ..... Table 6.1.1.2, Table 6.1.2, Table 6.5.1, Table A.3.3.7
Water spray systems ..... Table 10.1.1.2, 10.2.4, 10.2.6, Table 10.5.1, Table A.3.3.7, A.10.2.4, A.10.2.6.2
**Preaction sprinkler systems** ..... 4.1.9.1, 4.1.9.2(2)
Control valve information sign .....*see* Information signs
Definition ..... 3.6.4.5
Gauges ..... Table 5.1.1.2, 5.2.4.2, 5.2.4.4, A.5.2.4.4
Inspection ..... Table 5.1.1.2
Obstructions ..... D.4.1
**Preaction valves** ..... 5.2.4.4, Table 13.1.1.2, 13.4.3, Table 13.8.1, Table A.3.3.7, A.5.2.4.4, A.13.4.3.2.1 to A.13.4.3.3.3
**Premixed antifreeze solution** .....*see* Antifreeze sprinkler systems
**Preplanned impairments** ..... 15.5, A.15.5
Definition ..... 3.3.21.2
**Pressure control valves**
Definition ..... 3.5.4
Standpipe and hose systems ..... Table 6.1.1.2
**Pressure readings**
Deluge and preaction systems ..... 13.4.3.2.7
Foam-water sprinkler systems ..... 11.3.2.7, A.11.3.2.7
Water spray systems ..... 10.3.3.4
**Pressure-reducing valves** ..... Table 6.1.1.2, Table 13.1.1.2, 13.2.5.2, 13.5, 13.5.5, A.13.5.1.2 to A.13.5.6.2.2; *see also* Relief valves (fire pump)
Definition ..... 3.5.5
Fire pumps ..... Table 13.1.1.2
Hose connection ..... Table 13.1.1.2, Table A.3.3.7
Hose rack assembly ..... Table 13.1.1.2, Table A.3.3.7
Master pressure-reducing valve (definition) ..... 3.5.5.1, A.3.5.5.1
Sprinkler ..... Table 13.1.1.2, 13.5.1, Table A.3.3.7, A.13.5.1.2
Standpipe and hose systems ..... 6.3.1.4
**Pressure-regulating devices** .... Table 6.1.1.2, 6.3.1.4, Table 13.8.1; *see also* Pressure control valves; Pressure-reducing valves; Relief valves (fire pump)
Definition ..... 3.3.30, A.3.3.30
**Pressure-regulating valves**
Hose connection ..... 13.5.2, A.13.5.2.2
Hose rack assembly ..... 13.5.3
Master pressure-regulating valve .... 13.5.4, A.13.5.4.1 to A.13.5.4.3
**Pressure relief valves** .....*see* Relief valves
Circulation relief valve
Definition ..... 3.5.6.1
Definition ..... 3.5.6
**Pressure-restricting devices (definition)** ..... 3.3.31
**Pressure vacuum vents** ... Table 11.1.1.2, 11.2.9.5.3(2), 11.2.9.5.4(2), 11.2.9.5.5(2), 11.2.9.5.6(2), 11.4.8, A.11.2.9.5.3(2), A.11.2.9.5.4(2), A.11.2.9.5.5(2), A.11.2.9.5.6(2)
Definition ..... 3.3.32, A.3.3.32, Fig. A.3.3.32
**Private fire service mains** ..... Chap. 7
Component action requirements ..... 7.5, A.7.5.3
Definition ..... 3.6.3, A.3.6.3
Impairments ..... 7.1.5
Inspections .....*see* Inspections
Maintenance .....*see* Maintenance
Testing ..... 7.1, 7.3, Table A.3.3.7, A.7.3.1
**Process, changes in** ..... 4.1.6, A.4.1.6
**Proportioners** ..... Table 11.1.1.2, 11.2.9, Table 11.5.1, Table A.3.3.7, A.11.2.9
Definitions ..... 3.3.33.1 to 3.3.33.5, A.3.3.33, Figs. A.3.3.33 to A.3.3.33.5
**Pumps** .....*see* Fire pumps
**Purpose of standard** ..... 1.2, A.1.2


## -Q-


**Qualified (definition)** ..... 3.3.34
**Quick-opening devices** ..... Table 13.1.1.2, 13.4.4, Table 13.8.1, Table A.3.3.7, A.13.4.4.1.2.3 to A.13.4.4.3.2
**Quick-response early suppression (QRES) sprinklers (definition)** ..... 3.3.40.11
**Quick-response extended coverage sprinklers (definition)** ..... 3.3.40.12
**Quick-response (QR) sprinklers** ..... 5.4.1.4, 16.2.1.1.10, Table A.3.3.7, A.5.4.1.4
Definition ..... 3.3.40.13

Copyright 2015 National Fire Protection Association (NFPA). Licensed, by agreement, for individual use and download on October 23, 2015 to VETERANS AFFAIRS. No other reproduction or transmission in any form permitted without written permission of NFPA. For inquires or to report unauthorized use, contact licensing@nfpa.org.




**-R-**

**Rebuild (definition)** ..... 3.3.35
**Recessed sprinklers** ..... 5.2.1.1.6
Definition ..... 3.3.40.1.4
**Records** ..... 4.3, A.4.3.1, A.4.3.3
Owner/occupant responsibilities ..... 4.3.3, A.4.3.1, A.4.3.3
Valves ..... 13.2.8
**Reduced-pressure detector assemblies (RPDA)** ..... 13.6.1.2, A.13.1, A.13.6.1.2.2
**Reduced-pressure principle backflow prevention assemblies (RPBA)** ..... 13.6.1.2, A.13.1, A.13.6.1.2.2
Definition ..... 3.3.36
**References** ..... Chap. 2, Annex F
**Refrigerated spaces** .... 5.4.2.2; *see also* Freezers; Freezing conditions or cold weather
**Relief valves** ..... *see* Pressure relief valves
**Relief valves (fire pump)**
Circulation relief ..... 8.3.3.2(1), Table 13.1.1.2, 13.5.7.1
Pressure relief ..... 8.3.3.2(1), 8.3.3.3, Table 13.1.1.2, 13.5.7.2, Table 13.8.1, A.8.3.3.3
**Remove (definition)** ..... 3.3.37
**Repair (definition)** ..... 3.3.38
**Repairs, reconditioning, replacements, or adjustments** ..... 4.1.5, 4.1.7.2, 4.1.7.3, A.3.3.7, A.4.1.5; *see also* Maintenance
Fire department connections ..... 13.7.2
Fire pumps ..... 8.6.1
Foam-water sprinkler systems ..... 11.5.1
Private fire service mains ..... 7.5.1
Sprinklers ..... 5.3.1.1.1, 5.4.1.2 to 5.4.1.5, A.5.3.1.1.1.3 to A.5.3.1.1.1.6, A.5.4.1.4, A.5.4.1.5
Sprinkler systems ..... 5.5.1
Standpipe and hose systems ..... 6.5.1
Valves ..... 13.8.1
Water spray systems ..... 10.5.1
Water storage tanks ..... 9.6.1
**Replace (definition)** ..... 3.3.39
**Residential board and care occupancies, small** ..... 16.2
**Residential sprinklers** ..... Table A.3.3.7
Definition ..... 3.3.40.14
**Response time**
Foam-water sprinkler systems ..... 11.3.2.4
Water spray systems ..... 10.3.3.1, 10.4.5, A.10.3.3.1
**Rubber tire storage** ..... 5.2.1.2.4

**-S-**

**Safety** ..... 4.9, 4.9.6, A.4.9.6
**Scope of standard** ..... 1.1, A.1.1.1.2 to A.1.4
**Sectional drains** ..... 13.3.1.2.1
Definition ..... 3.3.10.2
**Seismic braces** ..... Table 5.1.1.2, 5.2.3, Table 6.5.1, Table 10.5.1, Table 11.5.1, Table A.3.3.7, A.5.2.3
**Semiautomatic dry standpipe system** ..... 6.3.2.1, Table A.3.3.7, A.6.3.2.1
Definition ..... 3.3.42
**Semiautomatic hose rack assembly** ..... *see* Hose storage devices
**Shall (definition)** ..... 3.2.4
**Should (definition)** ..... 3.2.5
**Shutdown, system** ..... *see* Impairments; System shutdown
**Shutoff valves** ..... 4.1.8
**Sidewall sprinklers (definition)** ..... 3.3.40.1.5
**Signs, information** ..... *see* Information signs
**Small residential board and care occupancies** ..... 16.2
**Special sprinklers** ..... 5.2.1.2.3, 5.4.1.4, A.5.2.1.2.3, A.5.4.1.4
Definition ..... 3.3.40.15
**Spray coating areas, sprinklers protecting** ..... 5.4.1.8, 12.2.2.5, A.5.4.1.8.1
**Spray sprinklers** ..... 5.4.1.2.1
Definition ..... 3.3.40.16
Standard spray sprinkler (definition) ..... 3.3.40.17
**Sprinklers** ..... Table A.3.3.7
Standard spray ..... *see also* Dry sprinklers; Pendent sprinklers; Quick-response (QR) sprinklers; Standard spray sprinkler
Component action requirements ..... Table 5.5.1
Concealed ..... 5.2.1.1.6
Definition ..... 3.3.40.1.1
Concealed spaces, in ..... 5.2.1.1.4, A.5.2.1.1.4
Control mode specific application (CMSA) (definition) ..... 3.3.40.2, A.3.3.40.2
Corrosion-resistant ..... A.5.4.1.6
Definition ..... 3.3.40.3
Definitions ..... 3.3.40.1 to 3.3.40.17
Deflector clearance to storage ..... 5.2.1.2, 5.2.1.3, A.5.2.1.2, A.5.2.1.3
Early suppression fast-response (ESFR) ..... *see* Early suppression fast response sprinklers
Extended coverage ..... *see* Extended coverage sprinklers
Flush ..... 5.2.1.1.6
Definition ..... 3.3.40.1.2
Hazard evaluation form ..... Annex E
In-rack ..... 5.2.1.2.5
Inspections ..... *see* Inspections
Installation (definition) ..... 3.3.40.1
Maintenance ..... 5.4.1, A.5.4.1.2 to A.5.4.1.8.1
Nozzles (definition) ..... 3.3.40.7
Old-style/conventional ..... 5.4.1.2.1, A.5.4.1.2.1
Definition ..... 3.3.40.8
Open ..... *see* Open sprinkler
Ornamental/decorative ... *see* Ornamental/decorative sprinkler
Recessed ..... 5.2.1.1.6
Definition ..... 3.3.40.1.4
Residential sprinklers ..... Table A.3.3.7
Definition ..... 3.3.40.14
Sidewall (definition) ..... 3.3.40.1.5
Spare ..... Table 5.1.1.2, 5.2.1.4, 5.4.1.5, 5.4.1.5.4, A.5.4.1.5
Special ..... *see* Special sprinklers
Spray ..... 5.4.1.2.1
Standard spray ..... *see* Standard spray sprinkler
Definition ..... 3.3.40.16
Testing ..... *see* Testing
Upright ..... A.5.4.1.2.1
Definition ..... 3.3.40.1.6
**Sprinkler systems** ..... Chap. 5; *see also* Foam-water sprinkler systems
Combined standpipe and sprinkler (definition) ..... 3.6.1
Component action requirements ..... 5.5
Definition ..... 3.6.4, A.3.6.4
Flushing ..... *see* Flushing procedures
Impairments ..... 5.1.4
Inspection ..... *see* Inspections
Installation ..... 5.5.2
Maintenance ..... 5.1, 5.4, A.5.4.1.2 to A.5.4.3
Marine systems ..... 5.4.3, A.5.4.3
Obstructions ..... 14.3.1, A.14.3.1
Piping ..... *see* Piping
Testing ..... *see* Testing
**Standard balanced pressure proportioners** ..... Table 11.1.1.2, 11.2.9.5.4, 11.4.6, Table A.3.3.7, A.11.2.9.5.4(1), A.11.2.9.5.4(2)
Definition ..... 3.3.33.4, A.3.3.33.4, Fig. A.3.3.33.4
**Standard (definition)** ..... 3.2.6
**Standard pressure proportioners** ..... 11.2.9.5.1, 11.4.3, Table A.3.3.7, A.11.2.9.5.1.1, A.11.4.3.2
Definition ..... 3.3.33.5, A.3.3.33.5, Fig. A.3.3.33.5
**Standard spray sprinkler (definition)** ..... 3.3.40.17
**Standpipe and hose systems** ..... Chap. 6
Alarm devices ..... 6.3.3
Automatic standpipe systems (definition) ..... 3.3.41.1
Combined sprinkler and standpipe system (definition) ..... 3.6.1
Component action requirements ..... 6.5
Components ..... Table 6.1.2, 6.2.1
Definition ..... 3.3.41, A.3.3.41

Copyright 2015 National Fire Protection Association (NFPA). Licensed, by agreement, for individual use and download on October 23, 2015 to VETERANS AFFAIRS. No other reproduction or transmission in any form permitted without written permission of NFPA. For inquires or to report unauthorized use, contact licensing@nfpa.org.




Dry standpipe system ..... 6.3.2.1, Table A.3.3.7, A.6.3.2.1
Definition ..... 3.3.41.2
Semiautomatic ..... 6.3.2.1, Table A.3.3.7, A.6.3.2.1
Definition ..... 3.3.42
Inspections ..... *see* Inspections
Maintenance ..... 6.1, Table 6.1.1.2, 6.4
Manual standpipe system ..... 6.3.2.1, Table A.3.3.7, A.6.3.2.1
Definition ..... 3.3.41.3
Testing ..... *see* Testing
Types of standpipe systems
Class I system (definition) ..... 3.3.43.1
Class II system (definition) ..... 3.3.43.2
Class III system (definition) ..... 3.3.43.3
Wet standpipe system ..... 6.3.2.1.1, Table A.3.3.7
Definition ..... 3.3.41.4
**Storage, sprinkler deflector clearance to** ..... 5.2.1.2, 5.2.1.3, A.5.2.1.2, A.5.2.1.3
**Storage tanks** ..... *see* Water tanks
**Strainers** ..... 13.4.1.2, 13.4.3.1.8, A.13.4.1.2
Definition ..... 3.3.44, A.3.3.44
Dry or preaction valves ..... 13.4.4.1.6
Foam concentrate ..... 11.2.7.2, Table A.3.3.7
Foam-water sprinkler systems ..... 11.2.7, 11.2.9.5.3(1), 11.2.9.5.4(1), 11.2.9.5.5(1), 11.2.9.5.6(1), A.11.2.9.5.3(1), A.11.2.9.5.4(1), A.11.2.9.5.5(1), A.11.2.9.5.6(1)
Mainline ..... *see* Mainline strainers
Nozzle ..... 10.2.1.6
Valves ..... Table 13.1.1.2, Table 13.8.1, A.13.1
Water mist systems ..... Table 12.2.1.7, 12.2.2.6
Water spray systems ..... Table 10.1.1.2, 10.2.7, Table A.3.3.7, A.10.2.7
Water tank automatic tank fill valves ..... 9.5.2.3
**Suction screens** ..... 8.2.2(2), 8.3.3.7, A.8.3.3.7, C.1.2
Obstructions ..... D.3, D.4.3
**Supervision (definition)** ..... 3.3.45
**Supervisory signal devices** ..... Table 5.1.1.2, 5.2.5, Table 6.1.1.2, 6.3.3, Table 13.8.1
**Supports** ..... 10.2.4.2, Table 11.1.1.2, 11.2.4, A.4.1.5.1, A.10.2.4.2; *see also* Hangers
**Switches** ..... *see* Automatic transfer switch
**System shutdown;** ..... *see also* Impairments
Notification of system shutdown ..... 4.1.4, 15.5.2(5) to 15.5.2(7)
Owner/occupant responsibilities ..... 4.1.4
Pipe and fittings inspection ..... 5.2.2.4
Restoring systems to service ..... 4.1.4.2, 14.3.1(11)
Shutoff valves, location of ..... 4.1.8
Sprinkler inspection ..... 5.2.1.1.5
**System valves** ..... 13.4, A.13.4.1.1 to A.13.4.4.3.2


**-T-**


**Tanks, water** ..... *see* Water tanks
**Temporary fire protection** ..... 15.5.2(4)(c), A.15.5.2(4)(c)
**Test** ..... *see also* Valve status test
Definition ..... 3.3.46
**Testing** ..... 4.6, Table A.3.3.7, A.4.6.4 to A.4.6.6; *see also* Flow tests; Hydrostatic tests; Impairments; Supervisory signal devices
Backflow prevention assemblies ..... 13.6.2, A.13.6.2.1
Definition ..... 3.3.47, A.3.3.47
Fire department connections ..... 6.1.4, 7.1.2, 8.1.3, 9.1.2, 10.1.5
Fire hydrants ..... Table 7.1.1.2, 7.3.2, Table A.3.3.7
Fire pumps ..... *see* Fire pumps
Foam-water sprinkler systems ..... Table 11.1.1.2, 11.3, Table A.3.3.7, A.11.3
Forms for ..... Annex B
Main drain test ..... *see* Main drains
Owner/occupant responsibilities ..... 4.1.1 to 4.1.5, 4.9.5.2, A.4.1.1 to A.4.1.5
Performance-based programs ..... 4.7, A.4.7
Private fire service mains ..... Table 7.1.1.2, 7.3, Table A.3.3.7, A.7.3.1
Records ..... *see* Records
Return to service ..... 4.1.10.2
Sprinklers ..... Table 5.1.1.2, 5.3.1, Table A.3.3.7, A.5.3.1
Sprinkler systems ..... 5.1, 5.3, 16.1, 16.2, Table A.3.3.7, A.5.3.1 to A.5.3.4.2.1(3), A.16.1.1.1, A.16.1.1.2
Standpipe and hose systems ..... 6.1, Table 6.1.1.2, 6.3, Table A.3.3.7, A.6.3.1.1 to A.6.3.4
Valves ..... 7.1.2, 13.1, 13.2.5, Table A.3.3.7, A.13.1, A.13.2.5
Automatic tank fill valves ..... 9.5.3
Control ..... Table 12.1.2, 13.3.3, 16.2.1.1.13, Table A.3.3.7, A.13.3.3.2, A.13.3.3.5
Deluge ..... 13.4.3.2, A.13.4.3.2.1 to A.4.3.2.12
Dry pipe/quick- opening devices ..... 13.4.4.2, A.13.4.4.2.1 to A.13.4.4.2.4
Hose ..... 13.5.6.2, A.13.5.6.2.2
Preaction ..... 13.4.3.2, A.13.4.3.2.1 to A.4.3.2.12
Pressure-reducing ..... 13.5.1, 13.5.5.2, A.13.5.1.2
Pressure-regulating ..... 13.5.2.2, 13.5.2.3, 13.5.3.2, 13.5.3.3, A.13.5.2.2
Pressure relief ..... 13.5.7.2.3
Water mist systems ..... Table 12.1.2
Water spray systems ..... 10.4.4
Water mist systems ..... 12.1, A.12.1.2.1.1(5) to A.12.1.2.4
Water spray systems ..... 10.1, 10.2.1.3, 10.3, 10.4, Table A.3.3.7, A.10.1, A.10.3.2 to A.10.3.3.3.1
Water supply status during ..... 4.4
Water tanks ..... 9.1, Table 9.1.1.2, 9.3, 9.5.3, Table 10.1.1.2, Table A.3.3.7, A.9.1, A.9.3.1 to A.9.3.6
**Tire storage** ..... 5.2.1.2.4


**-U-**


**Ultra-high-speed water spray systems** ..... 10.4, Table A.3.3.7
**Underground piping, private fire service mains**
Inspection ..... 7.2.2.2, A.7.2.2.2
Testing ..... 7.3.1, Table A.3.3.7, A.7.3.1
**Units of measurement** ..... 1.4, A.1.4
**Upright sprinklers** ..... A.5.4.1.2.1
Definition ..... 3.3.40.1.6
**Use, changes in** ..... 4.1.6, A.4.1.6


**-V-**


**Valves** ... Chap. 13; *see also* Alarm valves; Check valves; Control valves; Deluge valves; Dry pipe valves; Hose valves; Pressure control valves; Pressure-reducing valves; Relief valves (fire pump)
Automatic tank fill valves ..... 9.5, Table 9.6.1
Ball ..... Table 11.5.1, A.13.1
Check ..... 13.4.2
Component action requirements ..... Table 6.5.1, Table 9.6.1, Table 10.5.1, Table 11.5.1, 13.8, A.13.8.3
Drip ..... Table 11.5.1, A.13.1
Flushing, used for ..... D.5.3
Gauges ..... 13.2.7
Inspections ..... *see* Inspections
Location ..... 4.1.8
Maintenance ..... *see* Maintenance
Owner/occupant responsibilities ..... 13.2.1
Preaction ..... 13.4.3, A.13.4.3.2.1 to A.13.4.3.3.3
Protection of ..... 13.2.3, A.13.2.3
Records ..... 13.2.8
Return to service after testing ..... 13.4.3.2.10
Shutoff ..... 4.1.8
System ..... 13.4, A.13.4.1.1 to A.13.4.4.3.2
Testing ..... *see* Testing
Test valves ..... 4.6.3
Water mist systems ..... Table 12.1.2
Water-spray fixed systems ..... 10.1.5
**Valve status test (definition)** ..... 3.3.48

Copyright 2015 National Fire Protection Association (NFPA). Licensed, by agreement, for individual use and download on October 23, 2015 to VETERANS AFFAIRS. No other reproduction or transmission in any form permitted without written permission of NFPA. For inquires or to report unauthorized use, contact licensing@nfpa.org.



**Valve status test connection (definition)** ..... 3.3.49, A.3.3.49
**Valve supervisory devices** ..... Table 5.1.1.2, Table 6.1.1.2, Table 11.5.1, 13.3.3.5, 16.2.1.1.5, A.13.3.3.5
Component action requirements ..... Table 5.5.1, Table 6.5.1, Table 7.5.1
Water tanks ..... Table 9.6.1
**Ventilating systems, sprinklers for** ..... 5.4.1.7, 12.2.2.7
**Vents, pressure vacuum** ..... 11.4.8

-W-

**Wall hydrants** ..... Table 7.1.1.2, 7.2.2.4, 7.3.2.3, Table A.3.3.7
Definition ..... 3.3.12.3, A.3.3.12.3, Fig. A.3.3.12.3
**Waterflow alarm devices** ..... Table 13.1.1.2, 13.2.6, A.13.1
Definition ..... 3.3.52
Foam-water sprinkler systems ..... Table 11.1.1.2, 11.1.4.1.1 to 11.1.4.1.3, 11.3.1.1, Table 11.5.1
Sprinkler systems ..... Table 5.1.1.2, 5.2.5, 5.3.3, Table 5.5.1, A.5.3.3.2, A.5.3.3.5
Standpipe and hose systems ..... Table 6.1.1.2, 6.3.3, Table 6.5.1
Water mist systems ..... 12.2.1.1.3
Water spray systems ..... Table 10.5.1
**Water mist systems** ..... Chap. 12
Definition ..... 3.6.5
Inspection, maintenance, and testing ..... 12.1, 12.2, A.12.1.2.1.1(5) to A.12.1.2.4, A.12.2.1.5 to A.12.2.2.5.2
Training ..... 12.3
**Water spray (definition)** ..... 3.3.50, A.3.3.50
**Water spray nozzles** ..... 5.4.1.7, Table 10.1.1.2, 10.2.5, 10.3.3.3, Table A.3.3.7, A.10.2.5, A.10.3.3.3
Component action requirements ..... Table 10.5.1
Definition ..... 3.3.27.2, A.3.3.27.2
**Water spray systems** ..... Chap. 10; *see also* Fire pumps; Water tanks
Component action requirements ..... 10.5
Definition ..... 3.6.6, A.3.6.6
Foam-water spray system (definition) .... 3.4.1; *see also* Foam-water sprinkler systems
Impairments ..... 10.1.6, A.10.1.6
Inspection and maintenance procedures ..... 10.1, Table 10.1.1.2, 10.2, Table A.3.3.7, A.10.1, A.10.2.4 to A.10.2.7
Automatic detection equipment ..... 10.2.3, 10.4.2
Deluge valves ..... 10.2.1.5, 10.2.2
Drainage ..... 10.2.8
Piping ..... 10.2.4, 10.2.6, A.10.2.4, A.10.2.6.2
Strainers ..... 10.2.7, A.10.2.7
Valves ..... 10.4.4, Chap. 13
Water supply ..... 10.2.6, A.10.2.6.2
Manual operations ..... 10.3.5
Return to service after testing ..... 10.3.6
Testing ..... *see* Testing
Ultra high-speed water spray system (definition) ..... 3.6.6.1
**Water supply**
Definition ..... 3.3.51
Foam-water sprinkler systems ..... 11.2.6, A.11.2.6.2
Obstructions ..... Annex D
Status during inspection, testing, and maintenance ..... 4.4
Water spray systems ..... 10.2.6, 10.3.4, A.10.2.6.2
**Water tanks** ..... Chap. 9
Alarm devices ..... Table 9.1.1.2, 9.2.1, 9.2.3, 9.2.4.2, 9.3.3, 9.3.5, Table 9.6.1, A.9.2.1.1, A.9.3.5
Component action requirements ..... 9.6
Definition ..... 3.6.7
Embankment-supported coated fabric tanks, maintenance of ..... Table 9.1.1.2, 9.4.6
Foam-water sprinkler systems ..... 11.1.2
Heating systems ..... Table 9.1.1.2, 9.2.3, Table 9.6.1
Impairments ..... 9.1.4
Inspections ..... *see* Inspections
Maintenance ..... *see* Maintenance
Obstruction investigations ..... D.3
Pressure tanks ... Table 9.1.1.2, 9.2.2, Table 10.1.1.2, Table A.3.3.7
Testing ..... *see* Testing
Water spray systems ..... 10.2.10
**Wet barrel hydrants** ..... Table 7.1.1.2, 7.2.2.5, Table A.3.3.7
Definition ..... 3.3.12.4, A.3.3.12.4, Fig. A.3.3.12.4
**Wet pipe sprinkler systems**
Conversion of dry pipe systems to ..... A.5.4.2
Definition ..... 3.6.4.6, A.3.6.4.6
Gauges ..... 5.2.4.1, A.5.2.4.1
Inspection ..... Table 5.1.1.2
Obstructions ..... D.2.5, D.3.2, D.3.4, D.5.4
**Wharves, sprinklers for** ..... 5.4.1.2.2

-Y-

**Yard mains** ..... 14.3.1, A.14.3.1, D.3, D.5.1

-Z-

**Zebra mussels, obstruction by** ..... D.4.6

Copyright 2015 National Fire Protection Association (NFPA). Licensed, by agreement, for individual use and download on October 23, 2015 to VETERANS AFFAIRS. No other reproduction or transmission in any form permitted without written permission of NFPA. For inquires or to report unauthorized use, contact licensing@nfpa.org.

# *Sequence of Events Leading to Issuance of This NFPA Committee Document*

## Step 1: Call for Proposals

- Proposed new Document or new edition of an existing Document is entered into one of two yearly revision cycles, and a Call for Proposals is published.

## Step 2: Report on Proposals (ROP)

- Committee meets to act on Proposals, to develop its own Proposals, and to prepare its Report.
- Committee votes by written ballot on Proposals. If two-thirds approve, Report goes forward. Lacking two-thirds approval, Report returns to Committee.
- Report on Proposals (ROP) is published for public review and comment.

## Step 3: Report on Comments (ROC)

- Committee meets to act on Public Comments to develop its own Comments, and to prepare its report.
- Committee votes by written ballot on Comments. If two-thirds approve, Report goes forward. Lacking two-thirds approval, Report returns to Committee.
- Report on Comments (ROC) is published for public review.

## Step 4: Technical Report Session

- "*Notices of intent to make a motion*" are filed, are reviewed, and valid motions are certified for presentation at the Technical Report Session. ("Consent Documents" that have no certified motions bypass the Technical Report Session and proceed to the Standards Council for issuance.)
- NFPA membership meets each June at the Annual Meeting Technical Report Session and acts on Technical Committee Reports (ROP and ROC) for Documents with "certified amending motions."
- Committee(s) vote on any amendments to Report approved at NFPA Annual Membership Meeting.

## Step 5: Standards Council Issuance

- Notification of intent to file an appeal to the Standards Council on Association action must be filed within 20 days of the NFPA Annual Membership Meeting.
- Standards Council decides, based on all evidence, whether or not to issue Document or to take other action, including hearing any appeals.

# *Committee Membership Classifications*

The following classifications apply to Technical Committee members and represent their principal interest in the activity of the committee.

M *Manufacturer:* A representative of a maker or marketer of a product, assembly, or system, or portion thereof, that is affected by the standard.

U *User:* A representative of an entity that is subject to the provisions of the standard or that voluntarily uses the standard.

I/M *Installer/Maintainer:* A representative of an entity that is in the business of installing or maintaining a product, assembly, or system affected by the standard.

L *Labor:* A labor representative or employee concerned with safety in the workplace.

R/T *Applied Research/Testing Laboratory:* A representative of an independent testing laboratory or independent applied research organization that promulgates and/or enforces standards.

E *Enforcing Authority:* A representative of an agency or an organization that promulgates and/or enforces standards.

I *Insurance:* A representative of an insurance company, broker, agent, bureau, or inspection agency.

C *Consumer:* A person who is, or represents, the ultimate purchaser of a product, system, or service affected by the standard, but who is not included in the *User* classification.

SE *Special Expert:* A person not representing any of the previous classifications, but who has a special expertise in the scope of the standard or portion thereof.

NOTES:
1. "Standard" connotes code, standard, recommended practice, or guide.
2. A representative includes an employee.
3. While these classifications will be used by the Standards Council to achieve a balance for Technical Committees, the Standards Council may determine that new classifications of members or unique interests need representation in order to foster the best possible committee deliberations on any project. In this connection, the Standards Council may make appointments as it deems appropriate in the public interest, such as the classification of "Utilities" in the National Electrical Code Committee.
4. Representatives of subsidiaries of any group are generally considered to have the same classification as the parent organization.

Copyright 2015 National Fire Protection Association (NFPA). Licensed, by agreement, for individual use and download on October 23, 2015 to VETERANS AFFAIRS. No other reproduction or transmission in any form permitted without written permission of NFPA. For inquires or to report unauthorized use, contact licensing@nfpa.org.

## Submitting Public Input / Public Comment through the Electronic Submission System (e-Submission):

As soon as the current edition is published, a Standard is open for Public Input.

Before accessing the e-Submission System, you must first sign-in at www.NFPA.org. *Note: You will be asked to sign-in or create a free online account with NFPA before using this system*:

a. Click in the gray Sign In box on the upper left side of the page. Once signed-in, you will see a red "Welcome" message in the top right corner.
b. Under the Codes and Standards heading, Click on the Document Information pages (List of Codes & Standards), and then select your document from the list or use one of the search features in the upper right gray box.

*OR*

a. Go directly to your specific document page by typing the convenient short link of www.nfpa.org/document#, (Example: NFPA 921 would be www.nfpa.org/921) Click in the gray Sign In box on the upper left side of the page. Once signed in, you will see a red "Welcome" message in the top right corner.

To begin your Public Input, select the link The next edition of this standard is now open for Public Input (formally "proposals") located on the Document Information tab, the Next Edition tab, or the right-hand Navigation bar. Alternatively, the Next Edition tab includes a link to Submit Public Input online

At this point, the NFPA Standards Development Site will open showing details for the document you have selected. This "Document Home" page site includes an explanatory introduction, information on the current document phase and closing date, a left-hand navigation panel that includes useful links, a document Table of Contents, and icons at the top you can click for Help when using the site. The Help icons and navigation panel will be visible except when you are actually in the process of creating a Public Input.

Once the First Draft Report becomes available there is a Public comment period during which anyone may submit a Public Comment on the First Draft. Any objections or further related changes to the content of the First Draft must be submitted at the Comment stage.

To submit a Public Comment you may access the e-Submission System utilizing the same steps as previous explained for the submission of Public Input.

For further information on submitting public input and public comments, go to: http://www.nfpa.org/publicinput

## Other Resources available on the Doc Info Pages

**Document information tab**: Research current and previous edition information on a Standard

**Next edition tab**: Follow the committee's progress in the processing of a Standard in its next revision cycle.

**Technical committee tab:** View current committee member rosters or apply to a committee

**Technical questions tab**: For members and Public Sector Officials/AHJs to submit questions about codes and standards to NFPA staff. Our Technical Questions Service provides a convenient way to receive timely and consistent technical assistance when you need to know more about NFPA codes and standards relevant to your work. Responses are provided by NFPA staff on an informal basis.

**Products/training tab:** List of NFPA's publications and training available for purchase.

**Community tab:** Information and discussions about a Standard

Copyright 2015 National Fire Protection Association (NFPA). Licensed, by agreement, for individual use and download on October 23, 2015 to VETERANS AFFAIRS. No other reproduction or transmission in any form permitted without written permission of NFPA. For inquires or to report unauthorized use, contact licensing@nfpa.org.

# Information on the NFPA Standards Development Process

**I. Applicable Regulations.** The primary rules governing the processing of NFPA standards (codes, standards, recommended practices, and guides) are the NFPA *Regulations Governing the Development of NFPA Standards (Regs)*. Other applicable rules include NFPA *Bylaws*, NFPA *Technical Meeting Convention Rules*, NFPA *Guide for the Conduct of Participants in the NFPA Standards Development Process*, and the NFPA *Regulations Governing Petitions to the Board of Directors from Decisions of the Standards Council*. Most of these rules and regulations are contained in the *NFPA Standards Directory*. For copies of the *Directory*, contact Codes and Standards Administration at NFPA Headquarters; all these documents are also available on the NFPA website at "www.nfpa.org."

The following is general information on the NFPA process. All participants, however, should refer to the actual rules and regulations for a full understanding of this process and for the criteria that govern participation.

**II. Technical Committee Report.** The Technical Committee Report is defined as "the Report of the responsible Committee(s), in accordance with the Regulations, in preparation of a new or revised NFPA Standard." The Technical Committee Report is in two parts and consists of the First Draft Report and the Second Draft Report. (See *Regs* at 1.4)

**III. Step 1: First Draft Report.** The First Draft Report is defined as "Part one of the Technical Committee Report, which documents the Input Stage." The First Draft Report consists of the First Draft, Public Input, Committee Input, Committee and Correlating Committee Statements, Correlating Input, Correlating Notes, and Ballot Statements. (See *Regs* at 4.2.5.2 and Section 4.3) Any objection to an action in the First Draft Report must be raised through the filing of an appropriate Comment for consideration in the Second Draft Report or the objection will be considered resolved. [See *Regs* at 4.3.1(b)]

**IV. Step 2: Second Draft Report.** The Second Draft Report is defined as "Part two of the Technical Committee Report, which documents the Comment Stage." The Second Draft Report consists of the Second Draft, Public Comments with corresponding Committee Actions and Committee Statements, Correlating Notes and their respective Committee Statements, Committee Comments, Correlating Revisions, and Ballot Statements. (See *Regs* at Section 4.2.5.2 and 4.4) The First Draft Report and the Second Draft Report together constitute the Technical Committee Report. Any outstanding objection following the Second Draft Report must be raised through an appropriate Amending Motion at the Association Technical Meeting or the objection will be considered resolved. [See *Regs* at 4.4.1(b)]

**V. Step 3a: Action at Association Technical Meeting.** Following the publication of the Second Draft Report, there is a period during which those wishing to make proper Amending Motions on the Technical Committee Reports must signal their intention by submitting a Notice of Intent to Make a Motion. (See *Regs* at 4.5.2) Standards that receive notice of proper Amending Motions (Certified Amending Motions) will be presented for action at the annual June Association Technical Meeting. At the meeting, the NFPA membership can consider and act on these Certified Amending Motions as well as Follow-up Amending Motions, that is, motions that become necessary as a result of a previous successful Amending Motion. (See 4.5.3.2 through 4.5.3.6 and Table1, Columns 1-3 of *Regs* for a summary of the available Amending Motions and who may make them.) Any outstanding objection following action at an Association Technical Meeting (and any further Technical Committee consideration following successful Amending Motions, see *Regs* at 4.5.3.7 through 4.6.5.3) must be raised through an appeal to the Standards Council or it will be considered to be resolved.

**VI. Step 3b: Documents Forwarded Directly to the Council.** Where no Notice of Intent to Make a Motion (NITMAM) is received and certified in accordance with the Technical Meeting Convention Rules, the standard is forwarded directly to the Standards Council for action on issuance. Objections are deemed to be resolved for these documents. (See *Regs* at 4.5.2.5)

**VII. Step 4a: Council Appeals.** Anyone can appeal to the Standards Council concerning procedural or substantive matters related to the development, content, or issuance of any document of the Association or on matters within the purview of the authority of the Council, as established by the *Bylaws* and as determined by the Board of Directors. Such appeals must be in written form and filed with the Secretary of the Standards Council (See *Regs* at 1.6). Time constraints for filing an appeal must be in accordance with 1.6.2 of the *Regs*. Objections are deemed to be resolved if not pursued at this level.

**VIII. Step 4b: Document Issuance.** The Standards Council is the issuer of all documents (see Article 8 of *Bylaws*). The Council acts on the issuance of a document presented for action at an Association Technical Meeting within 75 days from the date of the recommendation from the Association Technical Meeting, unless this period is extended by the Council (See *Regs at* 4.7.2). For documents forwarded directly to the Standards Council, the Council acts on the issuance of the document at its next scheduled meeting, or at such other meeting as the Council may determine (See *Regs* at 4.5.2.5 and 4.7.4).

**IX. Petitions to the Board of Directors.** The Standards Council has been delegated the responsibility for the administration of the codes and standards development process and the issuance of documents. However, where extraordinary circumstances requiring the intervention of the Board of Directors exist, the Board of Directors may take any action necessary to fulfill its obligations to preserve the integrity of the codes and standards development process and to protect the interests of the Association. The rules for petitioning the Board of Directors can be found in the *Regulations Governing Petitions to the Board of Directors from Decisions of the Standards Council* and in 1.7 of the *Regs*.

**X. For More Information.** The program for the Association Technical Meeting (as well as the NFPA website as information becomes available) should be consulted for the date on which each report scheduled for consideration at the meeting will be presented. For copies of the First Draft Report and Second Draft Report as well as more information on NFPA rules and for up-to-date information on schedules and deadlines for processing NFPA documents, check the NFPA website (www.nfpa.org/aboutthecodes) or contact NFPA Codes & Standards Administration at (617) 984-7246.

Copyright 2015 National Fire Protection Association (NFPA). Licensed, by agreement, for individual use and download on October 23, 2015 to VETERANS AFFAIRS. No other reproduction or transmission in any form permitted without written permission of NFPA. For inquires or to report unauthorized use, contact licensing@nfpa.org.

# Stay Up-To-Date. Join NFPA® Today!

**YES** Please enroll me as a member of NFPA for the term checked below. Activate all benefits, and ship my *Member Kit* including the *Benefits Guide* and other resources to help me make the most of my NFPA membership.

*Please allow three to four weeks for the kit to arrive.*

## Billing Information:

Name _____ Title _____

Organization _____

Address _____

City _____ State _____ Zip/Postal Code _____

Country _____

Phone _____ E-mail _____

Priority Code: 8J-MIS-1Z

## Please Answer The Following Questions:

**Job Title** *(check one)*

- ❏ Architect, Engineer, Consultant, Contractor (C17)
- ❏ Facilities Safety Officer (F14)
- ❏ Fire Chief, Other Fire Service (A11)
- ❏ Loss Control, Risk Manager (L11)
- ❏ Inspector, Building Official, Fire Marshal (F03)
- ❏ Owner, President, Manager, Administrator (C10)
- ❏ Other (please specify): (G11)_____

**Type of Organization** *(check one)*

- ❏ Architecture, Engineering, Contracting (A14)
- ❏ Commercial Firm (Office, Retail, Lodging, Restaurant) (G13)
- ❏ Electrical Services, Installation (J11)
- ❏ Fire Service, Public and Private (AA1)
- ❏ Government (C12)
- ❏ Industrial Firm (Factory, Warehouse) (C11)
- ❏ Institutional (Health Care, Education, Detention, Museums) (B11)
- ❏ Insurance, Risk Management (B12)
- ❏ Utilities (G12)
- ❏ Other (please specify): (G11)_____

## 4 Easy Ways to Join

**Fax:** 1-800-593-6372, Outside the U.S. +1-508-895-8301
**Mail:** NFPA Membership Services Center,
11 Tracy Drive, Avon, MA 02322-9908
**Online:** nfpa.org
**Call:** 1-800-344-3555
Outside the U.S. call +1-617-770-3000

05/13-D

## Terms and Payment:

- ❏ 1 year ($165)
- ❏ 2 years ($300) SAVE $30
- ❏ 3 years ($430) SAVE $65

Annual membership dues include a $45 subscription to *NFPA Journal®*. Regular membership in NFPA is individual and non-transferable. NFPA Journal is a registered trademark of the National Fire Protection Association, Quincy, MA 02169. Voting privileges begin after 180 days of individual membership. Prices subject to change.

## Payment Method:

Check One:

- ❏ Payment Enclosed *(Make check payable to NFPA.)*
- ❏ Purchase Order *(Please attach this form to your P.O.)*
- ❏ Bill Me Later *(Not available on International memberships.)*

Charge My: ❏ VISA ❏ MasterCard ❏ AmEx ❏ Discover

Card # _____

Expiration Date _____

Name on Card _____

Signature _____

International members: Please note prepayment is required on all International orders. Be sure to enclose a check or select your preferred credit card option.

### 100% Money-Back Guarantee

If anytime during your first year you decide membership is not for you, let us know and you'll receive a 100% refund of your dues.

Copyright 2015 National Fire Protection Association (NFPA). Licensed, by agreement, for individual use and download on October 23, 2015 to VETERANS AFFAIRS. No other reproduction or transmission in any form permitted without written permission of NFPA. For inquires or to report unauthorized use, contact licensing@nfpa.org.

# "Member-Only" Benefits
## Keeps You Up-To-Date!

**FREE! Technical Support** — Technical Support by Phone/Email. Get fast, reliable answers to all code-related questions—from electrical safety for employee workplaces to carbon dioxide extinguishing systems—from NFPA's team of fire protection specialists.

***NFPA Journal®*** — THE journal of record for fire protection, this bi-monthly publication will keep you abreast of the latest fire prevention and safety practices, as well as new technologies and strategies for protecting life and property from fire.

***NFPA Update*** — This easy-to-read monthly e-newsletter will keep you up-to-date on important association programs such as the annual meeting; bring you times of interest from NFPA's regional offices; and alert you to nationwide events and opportunities you won't want to miss.

***NFPA News*** — From new standards for dry cleaning plants to warning equipment for household carbon monoxide, this monthly online update keeps you abreast of additions of changes that could impact how you do you work.

**NFPA Standards Directory** — The NFPA Standards Directory is your complete guide to NFPA's code-making process. Simply access your online NFPA member profile for document revision guidelines, the revision cycle schedule, and forms for submitting Proposals and Comments. Your online NFPA member profile and access to the NFPA Standards Directory is automatically generated once you join NFPA.

**FREE! Section Membership** — Share YOUR expertise with others in any of 16 industry-specific sections covering your own field of interest.

**Member Kit** — Includes Membership Certificate, Pin, Decals, ID Card, and Camera-ready Logo Art. Display the NFPA member logo proudly on your business correspondence, literature, website, and vehicles.

**10% Discounts** — Save hundreds of dollars each year on the many products and services listed in the NFPA Catalog, including codes and standards publications, handbooks, training videos, and other education materials to increase your knowledge and skills.

Voting Rights — Your chance to help shape the future direction of fire prevention codes and standards. Voting rights go into effect 180 days from the start of individual membership.

**Conference Invitation**— Invitation to the NFPA Conference and Expo. Attend this important meeting at discounted rates as a member of NFPA.

## Join NFPA today!
## www.nfpa.org

NFPA® and *NFPA Journal®* are registered trademarks of the National Fire Protection Association, Quincy, MA 02169-7471