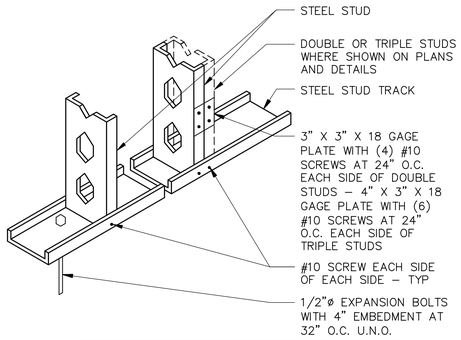

NOTE: ALL STRUCTURAL STEEL BEARING WALL STUDS SHALL BE FIRMLY SEATED FOR FULL END BEARING ON TOP AND BOTTOM TRACK. APPLIES TO TOP AND BOTTOM OF STUDS AND BOTH ENDS OF JOISTS.

112 TYPICAL TRACK ATTACHMENTS TO STRUCTURAL STEEL STUDS
48-SS 4 TYPICAL DETAIL

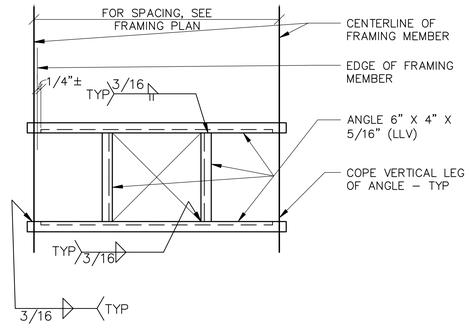

113 TYPICAL LARGE OPENING IN STEEL DECK
48-SS 4 TYPICAL DETAIL

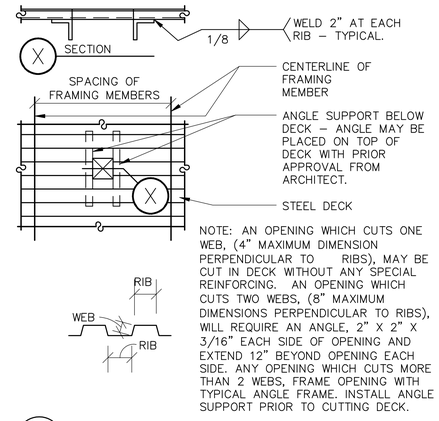

NOTE: AN OPENING WHICH CUTS ONE WEB, (4" MAXIMUM DIMENSION PERPENDICULAR TO RIBS), MAY BE CUT IN DECK WITHOUT ANY SPECIAL REINFORCING. AN OPENING WHICH CUTS TWO WEBS, (8" MAXIMUM DIMENSIONS PERPENDICULAR TO RIBS), WILL REQUIRE AN ANGLE, 2" X 2" X 3/16" EACH SIDE OF OPENING AND EXTEND 12" BEYOND OPENING EACH SIDE. ANY OPENING WHICH CUTS MORE THAN 2 WEBS, FRAME OPENING WITH TYPICAL ANGLE FRAME. INSTALL ANGLE SUPPORT PRIOR TO CUTTING DECK.

114 TYPICAL SMALL OPENING IN STEEL DECK
48-SS 4 TYPICAL DETAIL

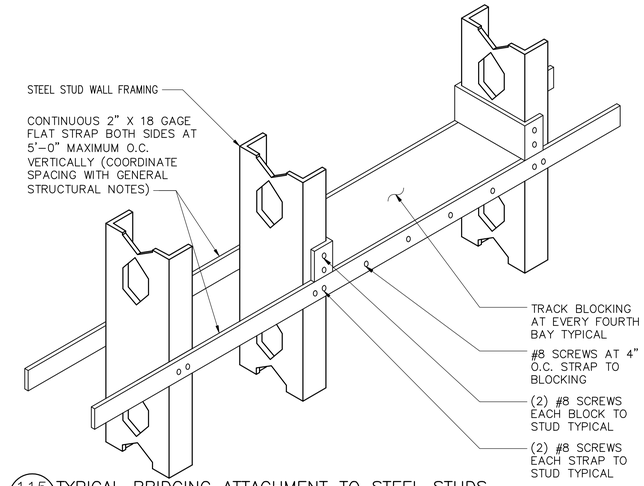

115 TYPICAL BRIDGING ATTACHMENT TO STEEL STUDS
48-SS 4 TYPICAL DETAIL

TENSION BARS f'c = 2,500 PSI, NORMAL WEIGHT								
BAR SIZE	TOP BARS				OTHER BARS			
	GR 40		GR 60		GR 40		GR 60	
	NOTE		NOTE		NOTE		NOTE	
	1	2	1	2	1	2	1	2
#3	20	20	23	23	16	16	18	18
#4	22	20	33	31	17	16	25	24
#5	34	27	51	41	26	21	39	31
#6	47	39	72	58	36	30	55	44

TENSION BARS f'c ≥ 3,000 PSI, NORMAL WEIGHT								
BAR SIZE	TOP BARS				OTHER BARS			
	GR 40		GR 60		GR 40		GR 60	
	NOTE		NOTE		NOTE		NOTE	
	1	2	1	2	1	2	1	2
#3	20	20	21	21	16	16	16	16
#4	20	20	30	28	16	16	23	22
#5	31	25	46	37	24	19	36	29
#6	43	35	65	52	33	27	50	40

COMPRESSION BARS f'c = ALL		
BAR SIZE	OPEN	ENCLOSED WITH TIES
#3	12	12
#4	15	13
#5	19	16
#6	23	19

NOTES:
1. CENTER-TO-CENTER SPACING OF REINFORCING = ≤ 3db.
2. CENTER-TO-CENTER SPACING OF REINFORCING = > 3db.
3. TOP BARS ARE HORIZONTAL BARS WITH MORE THAN 12 INCHES OF CONCRETE CAST BELOW THE BARS.
4. UNLESS NOTED OTHERWISE, LAP SPLICE IN CONCRETE BEAMS, SLABS, WALLS, STEM WALLS AND FOOTINGS SHALL BE TENSION LAP SPLICES AND LAP SPLICES IN CONCRETE COLUMNS SHALL BE COMPRESSION LAP SPLICES.
5. LAP SPLICES SHOWN IN SCHEDULE ARE IN INCHES.
6. db = NOMINAL BAR DIAMETER.
7. < MEANS LESS THAN, ≤ MEANS LESS THAN OR EQUAL TO, > MEANS GREATER THAN, ≥ MEANS GREATER THAN OR EQUAL TO.
8. CONCRETE COLUMN DOWEL EMBEDMENT SHALL BE A STANDARD COMPRESSION DOWEL EMBEDMENT LENGTH ACCORDING TO THE LATEST EDITION OF ACI 318.

116 MINIMUM REINFORCING BAR SPLICE LENGTHS IN CONCRETE
48-SS 4 TYPICAL DETAIL

SIZES SHOWN ON DRAWINGS ARE INCH-POUND REBAR.

INCH-POUND REBAR SIZE	EQUIVALENT SOFT METRIC REBAR SIZE	CROSS SECTIONAL AREA (IN)*2
#3	#10	0.11
#4	#13	0.20
#5	#16	0.31
#6	#19	0.44
#7	#22	0.60
#8	#25	0.79
#9	#29	1.00
#10	#32	1.27
#11	#36	1.56
#14	#43	2.25
#18	#57	4.00

CONVERSION CHART FOR SOFT METRIC REINFORCING BARS

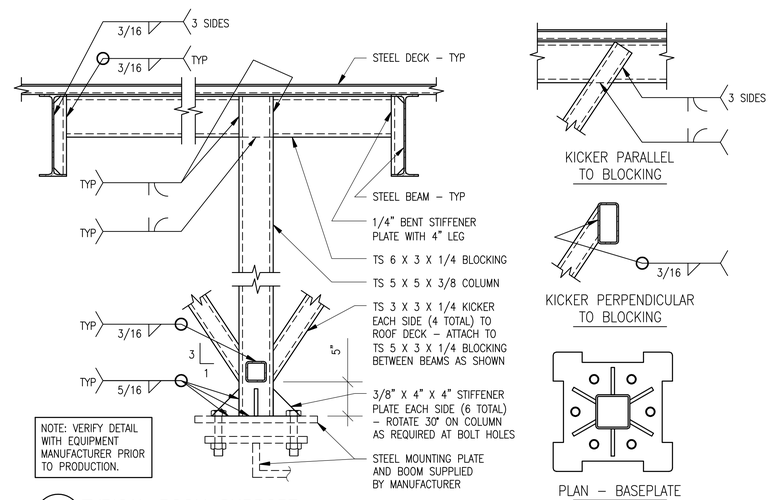

NOTE: VERIFY DETAIL WITH EQUIPMENT MANUFACTURER PRIOR TO PRODUCTION.

117 TYPICAL BOOM SUPPORT
48-SS 4 TYPICAL DETAIL

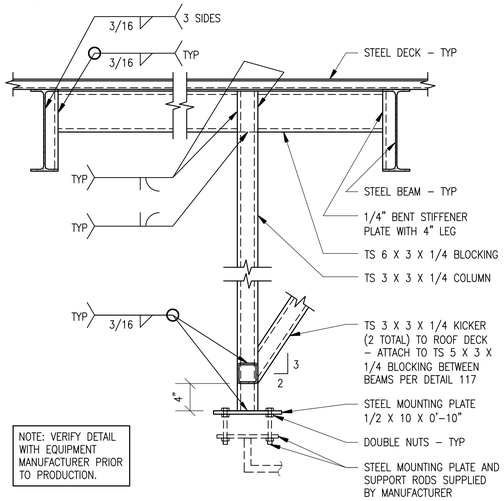

NOTE: VERIFY DETAIL WITH EQUIPMENT MANUFACTURER PRIOR TO PRODUCTION.

118 TYPICAL EXAM LIGHT SUPPORT
48-SS 4 TYPICAL DETAIL

ANCHOR, ANCHOR BOLT AND EXPANSION BOLT SCHEDULE			
BOLT DIAMETER	VERT BOLT EMBEDMENT LENGTH	HORIZ BOLT EMBEDMENT LENGTH	FILLET WELD SIZE S
1/2"	7"	4"	1/4"
5/8"	7"	4"	5/16"
3/4"	7"	5"	5/16"
7/8"	8"	6"	5/16"
1"	9"	7"	3/8"
1 1/4"	11"	9"	3/8"
1 1/2"	12"	10"	3/8"

PROVIDE ANCHORS, ANCHOR BOLTS AND EXPANSION BOLTS PER THIS SCHEDULE UNLESS NOTED OTHERWISE ON PLANS OR DETAILS.

ANCHOR BOLTS AND ANCHORS USED IN MASONRY SHALL BE INSTALLED IN GROUTED CELLS. IF GROUTED CELLS ARE NOT ENCOUNTERED, BREAK INTO CELL AND GROUT SOLID FOR 8" MINIMUM ABOVE AND BELOW BOLT LOCATION.

ANCHOR BOLTS AND EXPANSION BOLTS SHALL BE INSTALLED WITH STEEL WASHERS.

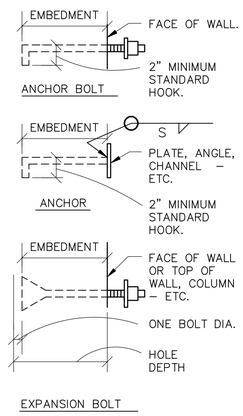

EPOXY ROD SCHEDULE		
THREADED ROD DIAMETER	VERTICAL AND HORIZONTAL BOLT EMBEDMENT LENGTH	
	CONCRETE	MASONRY
1/2"	5"	5"
5/8"	6'	6"
3/4"	6 5/8"	6 5/8"
7/8"	7 1/2"	———
1"	8 1/4"	———

PROVIDE EPOXY RODS PER THIS SCHEDULE UNLESS NOTED OTHERWISE ON PLANS OR DETAILS.

EPOXY RODS USED IN MASONRY SHALL BE INSTALLED IN GROUTED CELLS. IF GROUTED CELLS ARE NOT ENCOUNTERED, BREAK INTO CELL AND GROUT SOLID FOR 8" ABOVE AND BELOW BOLT LOCATION.

EPOXY RODS SHALL NOT BE INSTALLED UNTIL APPROVED BY THE STRUCTURAL ENGINEER OF RECORD. EPOXY MANUFACTURER SHALL BE DETERMINED AT THAT DATE. SPECIAL INSPECTION IS REQUIRED OF ALL EPOXY INSTALLATION.

RODS SHALL BE INSTALLED WITH STEEL WASHERS.

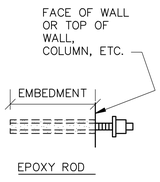

119 TYPICAL ANCHOR, ANCHOR BOLT, EXPANSION BOLT AND EPOXY ROD SCHEDULE
48-SS 4 TYPICAL DETAIL

BRODERICK ENGINEERING LLC.
BRODERICK ENGINEERING LLC.
6859 E. REMBRANDT AVE, SUITE 124
MESA, AZ 85212
PH 480-926-6333
FAX 480-926-3999
6350 N. CAMINO DE LA TIERRA, SUITE 140
TUCSON, AZ 85741
PH 520-887-9416
FAX 520-887-9486
B.E. JOB NO. 10105
STATE OF TEXAS
GREG S. BRODERICK
105545
LICENSED PROFESSIONAL ENGINEER
7/15/2011

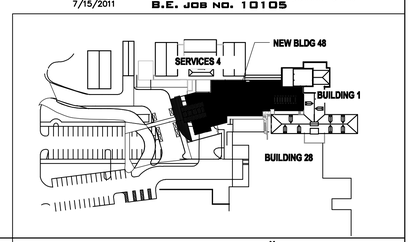

TYPICAL DETAILS

KEY PLAN

Department of Veterans Affairs
ARCHITECT OF RECORD:
SBBL Architecture + Planning
1001 North Alvernon Way #105, Tucson, Arizona 85711
t: 520.620.0255 f: 520.620.0535 e: sbbl@sbbl.biz

EMERGENCY DEPARTMENT

AMARILLO VA HEALTH CARE SYSTEM
AMARILLO, TEXAS

Approved: VA Area Proj. Mgr.

V.A. PROJECT NO: VA268-P-0196
SBBL PROJECT NO: 0110.00.0
DRAWN BY: JG
CHECKED BY: GSB
DATE: 07/15/2011

△	Date	Revision

Approved: Med. Ctr. Director

Approved: Asst. Admin Engineering Service

Approved: Asst. VA Medical Director

Approved: Chief of Facilities

Approved: Chief of Engineering

Approved: Chief of Projects

48-SS4

CAD FILE #