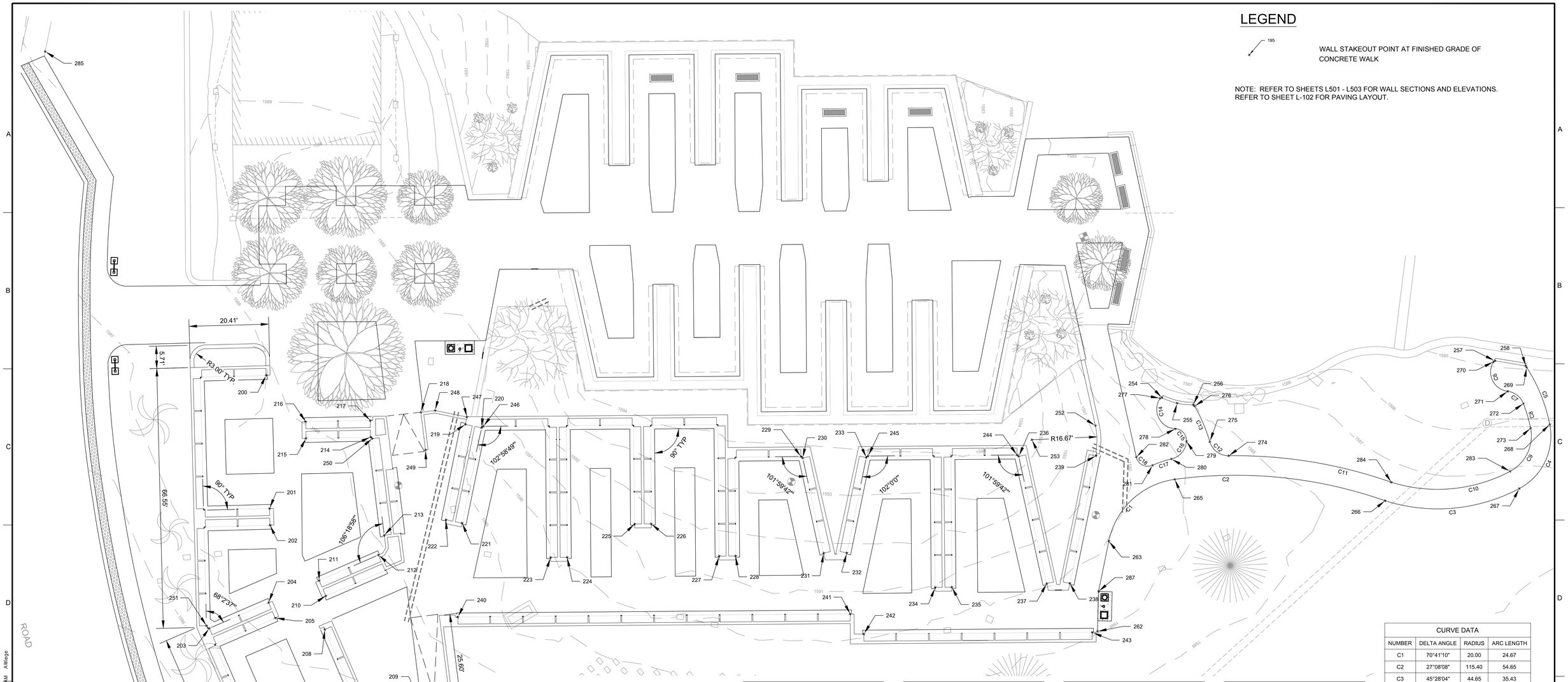

LEGEND

195 — WALL STAKEOUT POINT AT FINISHED GRADE OF CONCRETE WALK

NOTE: REFER TO SHEETS L501 - L503 FOR WALL SECTIONS AND ELEVATIONS.
REFER TO SHEET L-102 FOR PAVING LAYOUT.

CURVE DATA			
NUMBER	DELTA ANGLE	RADIUS	ARC LENGTH
C1	70°41'10"	20.00	24.67
C2	27°08'08"	115.40	54.65
C3	45°28'04"	44.65	35.43
C4	73°17'35"	15.22	19.46
C5	21°31'43"	42.23	15.87
C6	113°46'35"	5.00	9.93
C7	61°20'51"	5.00	5.35
C8	10°09'29"	37.23	6.60
C9	73°17'35"	10.22	13.07
C10	45°21'24"	39.65	31.39
C11	20°09'50"	120.40	42.37
C12	74°29'07"	5.00	6.50
C13	13°29'14"	42.23	9.94
C14	121°56'08"	5.00	10.64
C15	91°33'14"	3.00	4.79
C16	73°04'16"	5.00	6.38
C17	11°37'09"	25.00	5.07
C18	101°47'19"	3.00	5.33

Point Table			
Point #	Northing	Easting	DESCRIPTION
200	2267132.78	6248809.22	WALL
201	2267120.30	6248841.01	WALL
202	2267118.75	6248844.97	WALL
203	2267094.19	6248863.27	WALL
204	2267110.71	6248863.12	WALL
205	2267110.74	6248867.37	WALL
206	2267111.05	6248901.49	WALL
207	2267121.55	6248899.95	WALL
208	2267121.33	6248875.03	WALL
209	2267136.50	6248900.48	WALL
210	2267124.89	6248867.21	WALL
211	2267124.84	6248862.96	WALL
212	2267141.36	6248862.81	WALL
213	2267144.72	6248858.72	WALL
214	2267151.24	6248834.21	WALL
215	2267135.90	6248828.08	WALL
216	2267137.48	6248824.13	WALL
217	2267152.82	6248830.26	WALL
218	2267165.58	6248833.37	WALL
219	2267174.89	6248840.66	WALL
220	2267178.39	6248843.06	WALL
221	2267164.31	6248863.61	WALL

Point Table			
Point #	Northing	Easting	DESCRIPTION
222	2267160.80	6248861.21	WALL
223	2267181.76	6248880.52	WALL
224	2267185.69	6248882.14	WALL
225	2267204.91	6248880.99	WALL
226	2267208.84	6248882.61	WALL
227	2267221.67	6248896.98	WALL
228	2267225.55	6248898.58	WALL
229	2267250.86	6248881.63	WALL
230	2267251.14	6248882.16	WALL
231	2267246.64	6248906.66	WALL
232	2267252.12	6248908.93	WALL
233	2267266.20	6248888.37	WALL
234	2267269.55	6248925.86	WALL
235	2267273.48	6248927.48	WALL
236	2267302.28	6248903.29	WALL
237	2267296.25	6248936.05	WALL
238	2267301.73	6248938.31	WALL
239	2267320.56	6248910.83	WALL
240	2267153.94	6248885.36	WALL
241	2267246.82	6248923.68	WALL
242	2267248.05	6248929.77	WALL
243	2267302.11	6248952.12	WALL

Point Table			
Point #	Northing	Easting	DESCRIPTION
244	2267301.99	6248902.76	WALL
245	2267266.78	6248888.20	WALL
246	2267178.97	6248842.89	WALL
247	2267175.99	6248839.06	WALL
248	2267169.12	6248834.37	WALL
249	2267162.94	6248842.72	WALL
250	2267151.50	6248834.74	WALL
251	2267093.76	6248862.37	WALL
252	2267323.43	6248903.65	WALL
253	2267307.03	6248900.67	16.67' RADIUS
254	2267341.91	6248903.67	WALL
255	2267344.96	6248906.49	WALL
256	2267348.60	6248908.49	WALL
257	2267424.16	6248928.12	WALL
258	2267430.93	6248932.39	WALL
259	2267121.23	6248905.36	WALL
260	2267135.16	6248905.23	WALL
261	2267136.01	6248905.89	7.67' RADIUS
262	2267303.44	6248952.39	SW
263	2267315.11	6248932.23	SW PC
265	2267336.82	6248924.23	SW PCC
266	2267384.32	6248950.21	SW PCC

Point Table			
Point #	Northing	Easting	DESCRIPTION
267	2267417.20	6248960.69	SW PCC
268	2267430.76	6248948.60	SW PCC
269	2267431.00	6248932.83	SW PT
270	2267423.70	6248928.23	SW PC
271	2267424.13	6248936.59	SW PCC
272	2267426.62	6248941.04	SW PCC
273	2267425.86	6248947.59	SW PCC
274	2267351.92	6248924.04	SW PCC
275	2267348.83	6248918.84	SW PCC
276	2267348.79	6248908.92	SW PT
277	2267341.45	6248903.63	SW PC
278	2267341.98	6248912.36	SW PC
279	2267343.36	6248916.43	SW PC
280	2267338.03	6248919.08	SW PC
281	2267332.98	6248918.70	SW PC
282	2267329.95	6248915.16	SW PC
283	2267416.76	6248955.71	SWK PCC
284	2267387.62	6248946.45	SWK PCC
285	2267112.83	6248710.86	ME
286	2267057.41	6248979.21	ME
287	2267307.67	6248943.08	SW

NORTH

0 10 20
GRAPHIC SCALE: 1" = 10'

Revisions:	Date

CONSULTANTS:

ARCHITECT/ENGINEERS:

FOURFRONT DESIGN INC
517 7th street
rapid city sd 57701
p 605.342.9470
f 605.342.2377
www.4front.biz

Drawing Title: WALL AND REFLECTION WALK STAKEOUT PLAN

Approved: Project Director

Project Title: Expand Columbarium A

Location: Riverside National Cemetery, 22495 Van Buren Blvd, Riverside CA 92518

Date: May 26, 2016 | Checked: CZ | Drawn: CZ/JM

Project Number: 901CM3040

Building Number:

Drawing Number: C-108

Dwg. 11 of 47

NCA DESIGN AND CONSTRUCTION SERVICE

Department of Veterans Affairs

VA FORM 08-6231

L:\10-1696 VA NCA IDIQ\1696.038 Riverside NC 5000 Niches Columbarium\Drawings\Eng\Sheet Files\901CM3040-C-108.dwg 6-13-16 08:57:48 AM AWinge

three inches = one foot 6"
one and one half inches = one foot 6"
one inch = one foot 6"
three quarters inch = one foot 6"
one half inch = one foot
three eighths inch = one foot
one quarter inch = one foot
one eighth inch = one foot

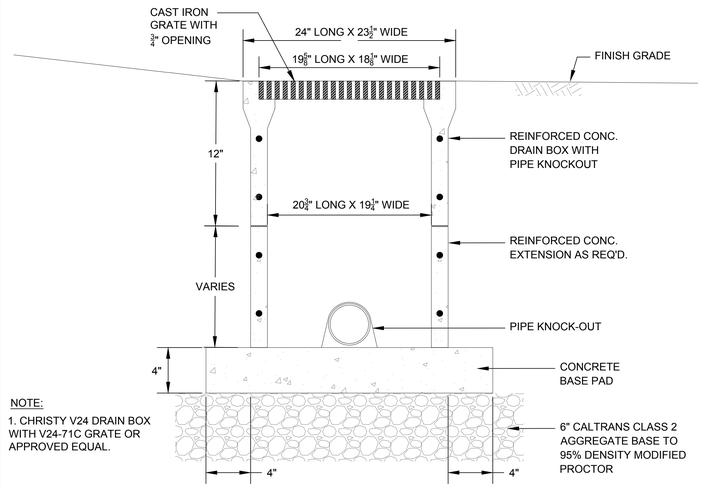

NOTE:

1. CHRISTY V24 DRAIN BOX WITH V24-71C GRATE OR APPROVED EQUAL.

B1 / C-501 YI-1 STORM DRAIN DETAIL
N.T.S

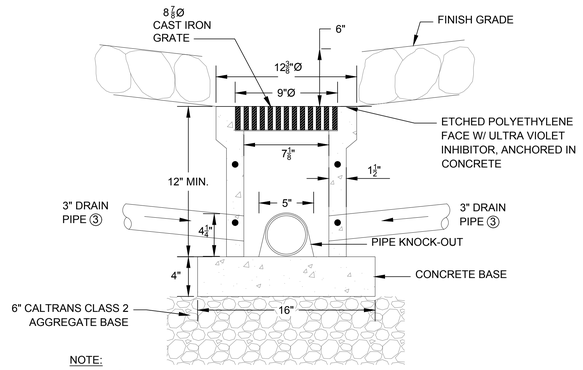

NOTE:

1. CHRISTY V01 DRAIN BOX WITH V01-71C GRATE OR APPROVED EQUAL.
2. USE CHRISTY F08C LID TYPE FOR CLEANOUT BOX OR APPROVED EQUAL.
3. 3" DRAIN PIPE FROM GRAVEL STRIP.

D1 / C-501 STORM DRAIN BOX
N.T.S

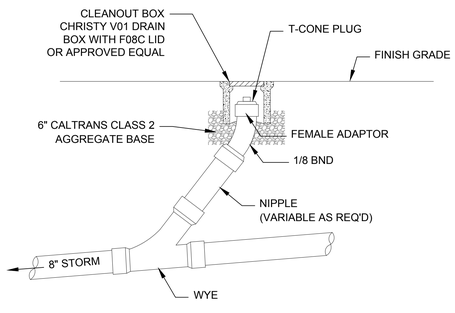

E1 / C-501 CLEANOUT
N.T.S

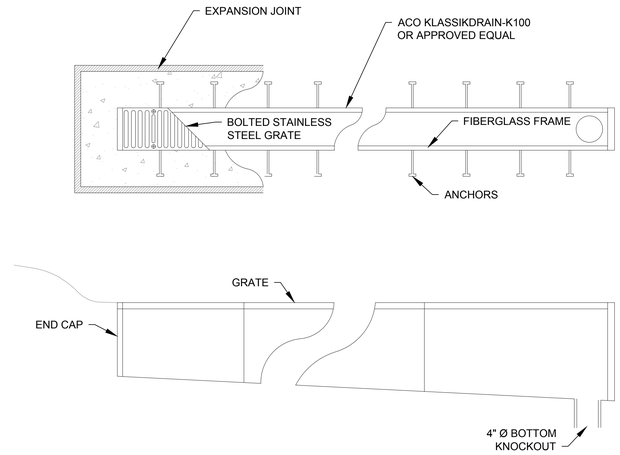

B5 / C-501 TRENCH DRAIN DETAIL
N.T.S

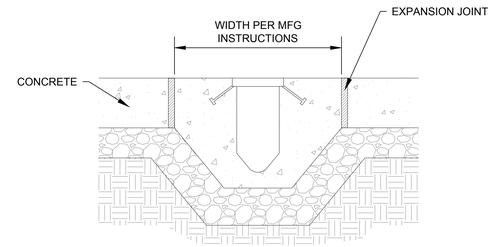

TRENCH DRAIN SPECIFICATIONS:
MATERIALS SHALL BE FABRICATED AT THE FACTORY. ANY KEYS OR TOOLS NECESSARY FOR MAINTENANCE SHALL BE INCLUDED BY THE CONTRACTOR. PRODUCT SHALL BE ACO KS100 SERIES TRENCH DRAIN. GRATE SHALL BE PERFORATED, HELSAFE. INSTALL PER MANUFACTURERS INSTRUCTIONS.

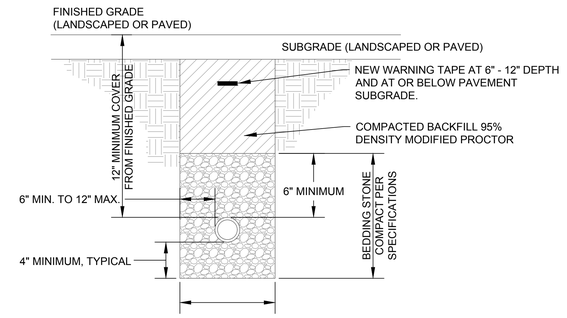

B8 / C-501 UTILITY LINE TRENCH SECTION
N.T.S

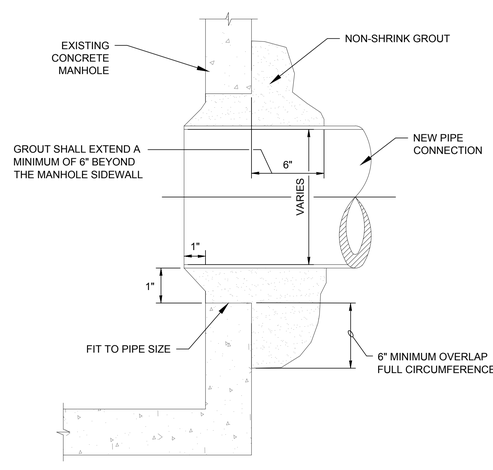

D4 / C-501 PIPE CONNECTION TO MANHOLE
N.T.S

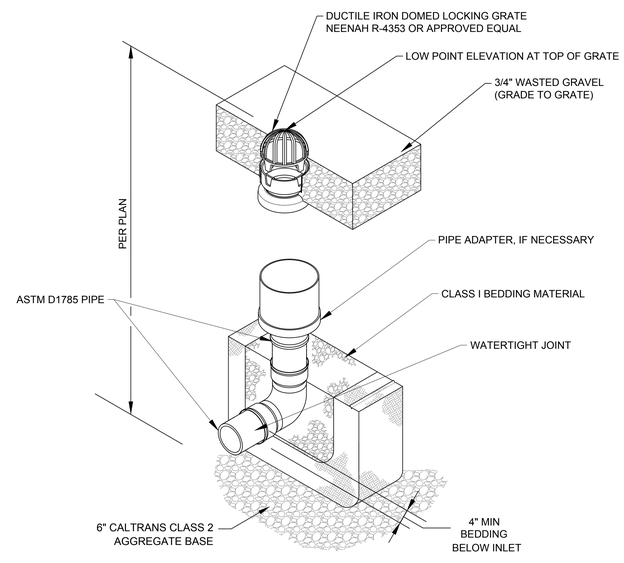

NOTES:

1. PROVIDE 18" MINIMUM COVER TO INVERT.
2. DOMED GRATE, INLINE DRAIN AND DRAIN BOX SHALL BE NYLOPLAST OR APPROVED EQUAL.
3. A MINIMUM OF 1' OF TYPE 1 BEDDING MATERIAL SHALL BE INSTALLED AROUND DRAIN BASIN.
4. DOMED GRATE SHALL BE DUCTILE IRON PER ASTM A536 GRADE 70-50-05

D6 / C-501 DOMED DRAIN BOX
N.T.S

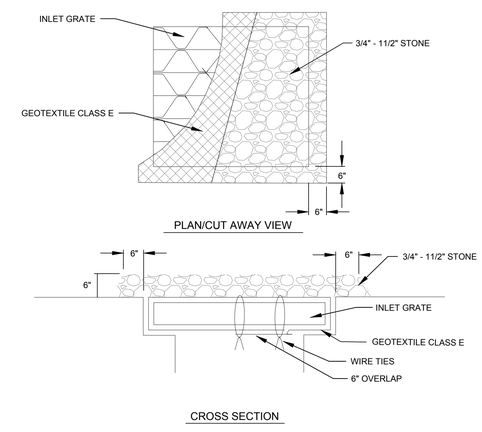

CONSTRUCTION SPECIFICATIONS

1. LIFT GRATE AND WRAP WITH GEOTEXTILE CLASS E TO COMPLETELY COVER ALL OPENINGS, THEN SET GRATE BACK IN PLACE.

2. PLACE 3/4" TO 11/2" STONE, 4"-6" THICK ON THE GRATE TO SECURE THE FABRIC AND PROVIDE ADDITIONAL FILTRATION.

D8 / C-501 INLET PROTECTION
N.T.S

Revisions:	Date

CONSULTANTS:

ARCHITECT/ENGINEERS:

FOURFRONT DESIGN INC.
517 7th street
rapid city sd 57701
p 605.342.9470
f 605.342.2377
www.4front.biz

Drawing Title: CIVIL DETAILS #1

Approved: Project Director

Project Title: Expand Columbarium A

Location: Riverside National Cemetery, 22495 Van Buren Blvd, Riverside CA 92518

Date: May 26, 2016 | Checked: CZ | Drawn: CZ/JM

Project Number: 901CM3040

Building Number:

Drawing Number: C-501

Dwg. 12 of 47

NCA DESIGN AND CONSTRUCTION SERVICE

Department of Veterans Affairs

VA FORM 08-6231

L:\10-1696 VA NCA IDIQ\1696.038 Riverside NC 5000 Niches Columbarium\Drawings\Eng\Sheet Files\901CM3040-C-501.dwg 6-13-16 08:58:11 AM AWage

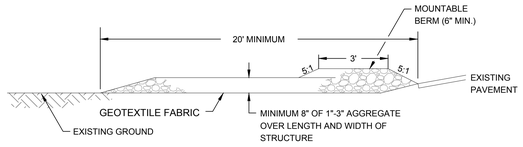

PROFILE

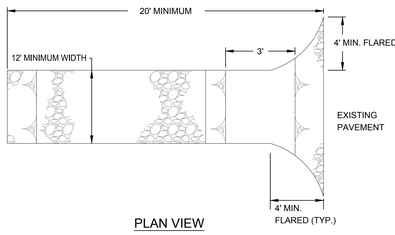

PLAN VIEW

B1 / C-502 STABILIZED CONSTRUCTION ENTRANCE
N.T.S

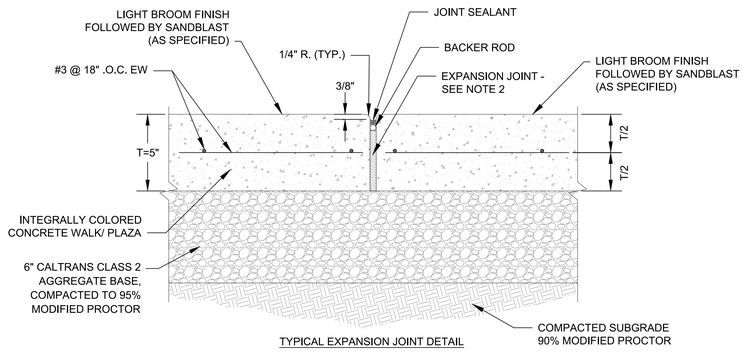

TYPICAL EXPANSION JOINT DETAIL

NOTES:

1. EXPANSION JOINTS SHALL BE LOCATED WHERE SIDEWALK ABUTS CONCRETE DRIVEWAYS, CURB, WALLS, FOOTINGS AND ANY OTHER ADJACENT STRUCTURE.
2. ONE-HALF INCH NON-BITUMINOUS JOINT SEALANT SHALL BE INSTALLED AT EXPANSION JOINT LOCATIONS AND SHALL EXTEND THE FULL DEPTH OF THE CONCRETE.

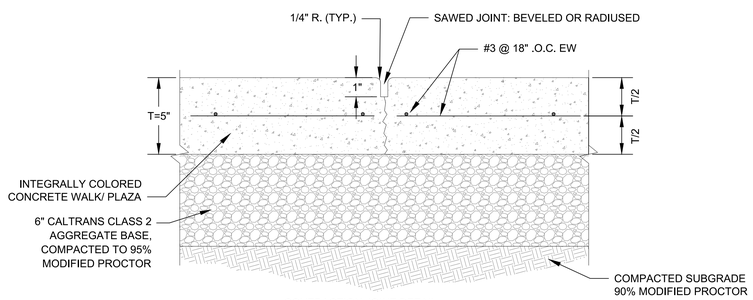

CONTRACTION JOINT DETAIL

NOTES:

1" DEEP CONTRACTION JOINTS SHALL BE PLACED AS SHOWN ON THE JOINT LAYOUT PLAN .

D5 / C-502 TYPICAL SIDEWALK DETAILS
N.T.S

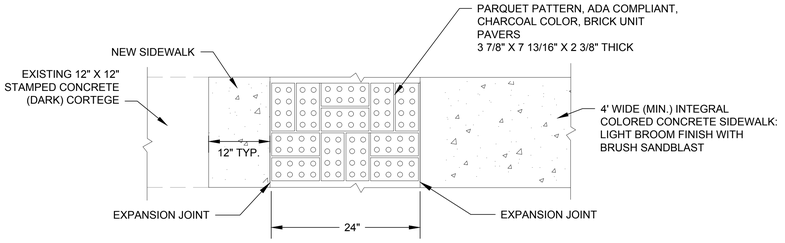

PLAN

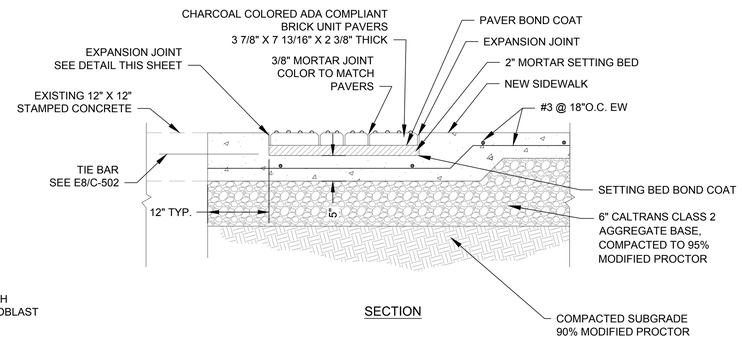

SECTION

B4 / C-502 ADA COMPLIANT PAVER DETAIL
N.T.S

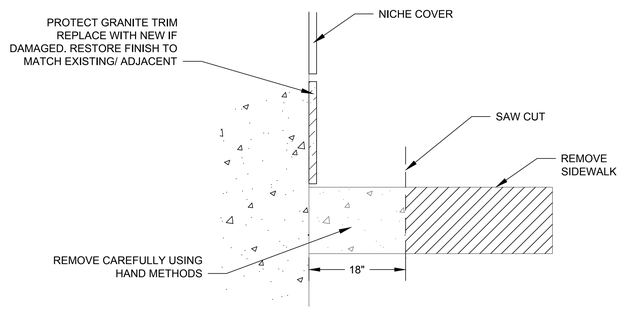

F6 / C-502 CONCRETE REMOVAL AT EXISTING COLUMBARIUM WALL
N.T.S

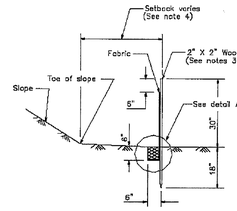

SECTION A–A

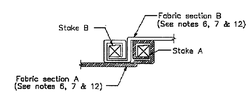

JOINING SECTION DETAIL (TOP VIEW)

LEGEND
Tamped backfill
Slope direction
Direction of flow

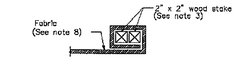

END STAKE DETAIL (TOP VIEW)

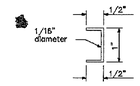

STAPLE DETAIL
(SEE NOTE 9)

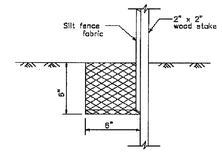

DETAIL A

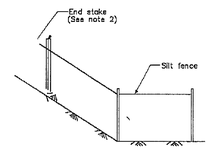

END DETAIL

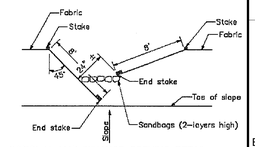

OPTIONAL MAINTENANCE OPENING DETAIL
(SEE NOTE 11)

NOTE:

SILT FENCE FABRIC SHALL BE A GEOTEXTILE FABRIC WITH A GRAB STRENGTH OF 100 LBS AND SHALL HAVE PROPERTIES IN ACCORDANCE WITH AASHTO M-288 GEOTEXTILE SPECIFICATIONS FOR HIGHWAY APPLICATIONS TABLE 6.

REFERENCE CALIFORNIA STORMWATER BMP HANDBOOK STANDARD DETAIL SE-1.

B7 / C-502 SILT FENCE
N.T.S

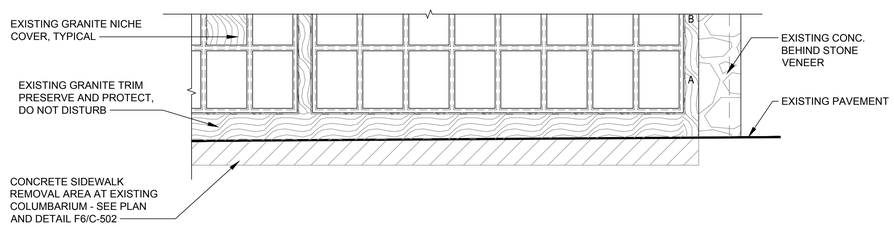

ELEVATION

NOTE:

RESTORE FINISH TO GRANITE TRIM TO MATCH ADJACENT EXISTING. REMOVE CONCRETE REMNANTS FROM GRANITE TRIM WITH THE USE OF STONE POLISHING EQUIPMENT. REMOVE HARD WATER STAINS AND EFFLORESCENCE FROM GRANITE TRIM WITH BUFFING COMPOUND AND STONE POLISHING EQUIPMENT.

D8 / C-502 EXISTING GRANITE TRIM PROTECTION
3/4" = 1'-0"

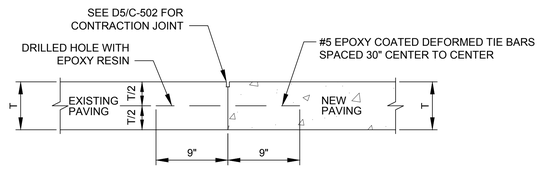

NOTE:
THE TIE BAR IS TO BE ANCHORED INTO THE EXISTING PAVING WITH AN EPOXY RESIN ADHESIVE. TIE BARS SHALL BE PLACED A MINIMUM OF 15" FROM EXISTING TRANSVERSE CONTRACTION JOINTS.
T = EXISTING AND NEW PAVEMENT THICKNESS

E8 / C-502 TIE BAR DETAIL
N.T.S

Revisions:	Date

CONSULTANTS:

ARCHITECT/ENGINEERS:

FOURFRONT DESIGN INC.
517 7th street
rapid city sd 57701
p 605.342.9470
f 605.342.2377
www.4front.biz

Drawing Title	CIVIL DETAILS #2
Approved: Project Director	
Project Title	Expand Columbarium A
Location	Riverside National Cemetery, 22495 Van Buren Blvd, Riverside CA 92518
Date	May 26, 2016
Checked	CZ
Drawn	CZ/JM
Project Number	901CM3040
Building Number	
Drawing Number	C-502
Dwg. 13 of 47	

NCA DESIGN AND CONSTRUCTION SERVICE

Department of Veterans Affairs

VA FORM 08-6231

L:\10-1696 VA NCA IDIQ\1696.038 Riverside NC 5000 Niches Columbarium\Drawings\Eng\Sheet Files\901CM3040-C-501.dwg 6-13-16 08:58:12 AM AWiege