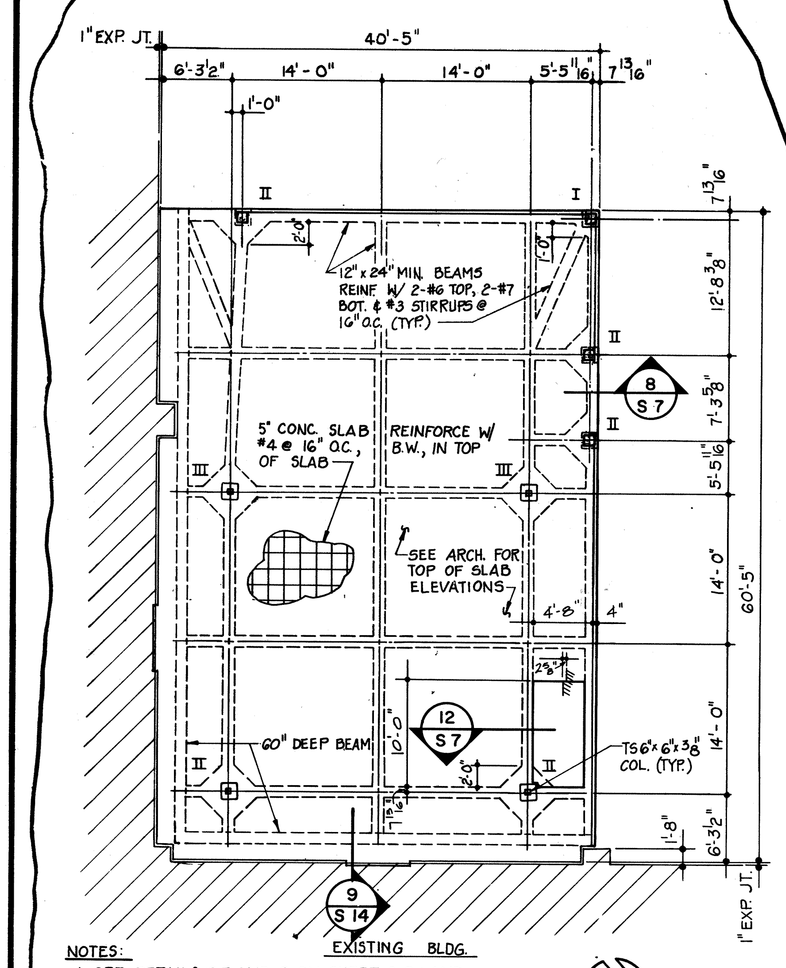

NOTES:
1. SEE DETAILS 6,7 AND 8 ON SHEET S-8, AND NOTES ON 6/S21 FOR RIBBED MAT FOUNDATION DETAILS.

1/S7 SPACE FRAME FOUNDATION PLAN
SCALE: 1/8" = 1'-0" (ADDITIVE ALTERNATE #2)

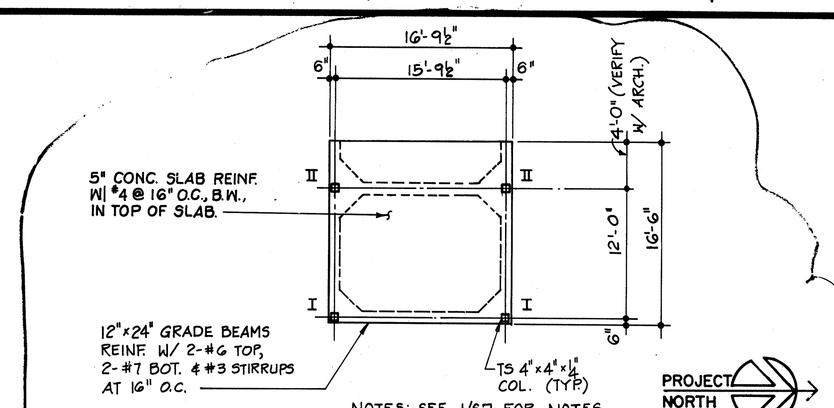

NOTES: SEE 1/S7 FOR NOTES.

2/S7 TERRACE NO. 1 FOUNDATION PLAN
SCALE: 1/8" = 1'-0" (ADDITIVE ALTERNATE #2)

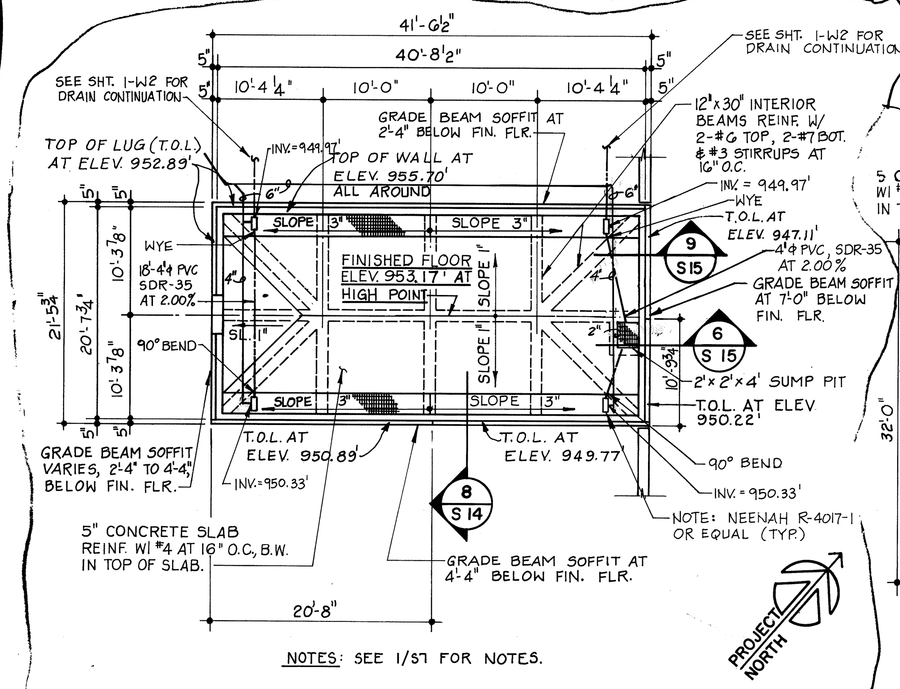

NOTES: SEE 1/S7 FOR NOTES.

5/S7 GREENHOUSE FOUNDATION PLAN
SCALE: 1/8" = 1'-0" (BUILDING NO. 7) (ADDITIVE ALTERNATE #2)

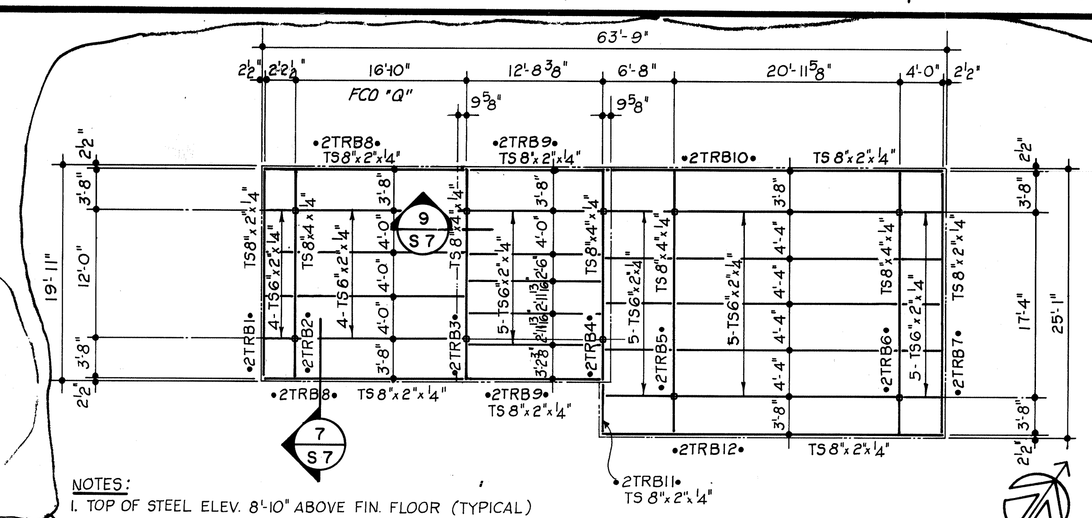

NOTES:
1. TOP OF STEEL ELEV. 8'-10" ABOVE FIN. FLOOR (TYPICAL)
2. SEE ARCH. DRAWINGS 1-14 FOR DETAILS REGARDING WOOD FACIA AT STEEL TUBES.

3/S7 TERRACE NO. 2 ROOF FRAMING PLAN
SCALE: 1/8" = 1'-0" (ADDITIVE ALTERNATE #2)

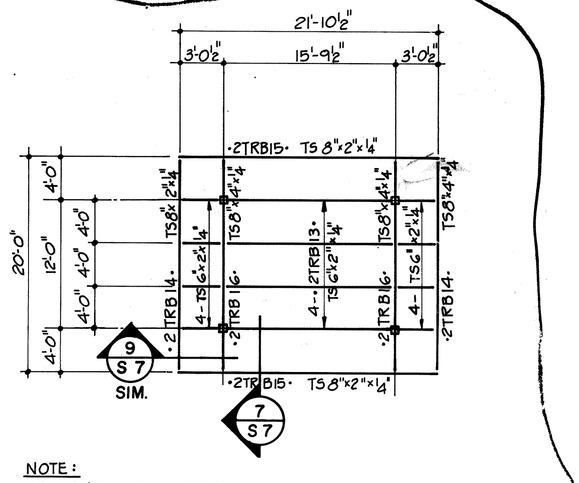

NOTE:
SEE 3/S-7 FOR NOTES.

4/S7 TERRACE NO. 1 ROOF FRAMING PLAN
SCALE: 1/8" = 1'-0" (ADDITIVE ALTERNATE #2)

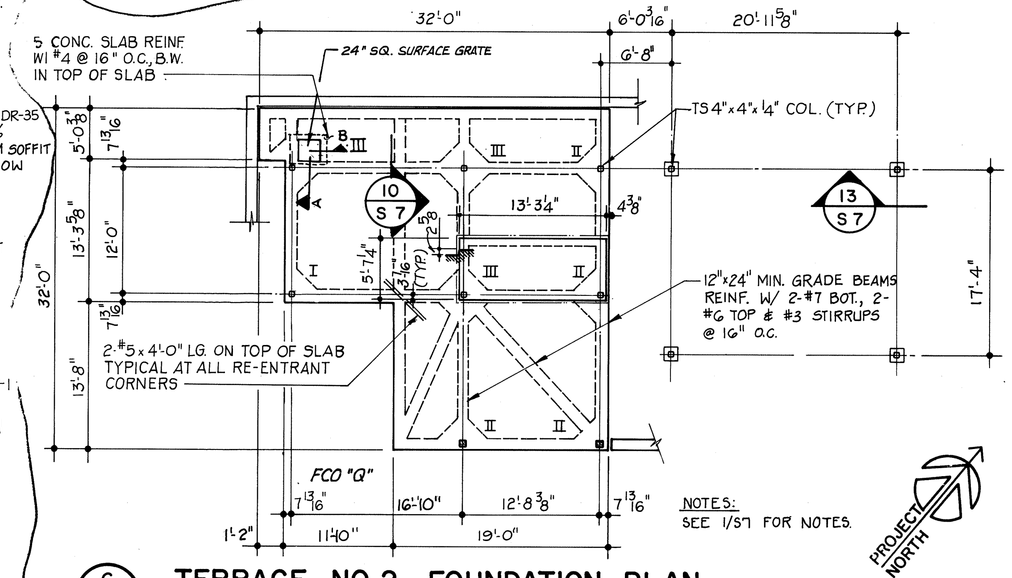

NOTES:
SEE 1/S7 FOR NOTES.

6/S7 TERRACE NO. 2 FOUNDATION PLAN
SCALE: 1/8" = 1'-0" (BUILDING NO. 8) (ADDITIVE ALTERNATE #2)

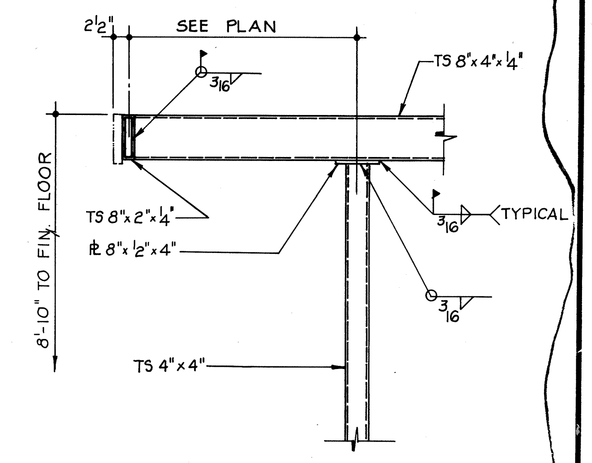

7/S7 SECTION
SCALE: 1/2" = 1'-0" (ADDITIVE ALTERNATE #2)

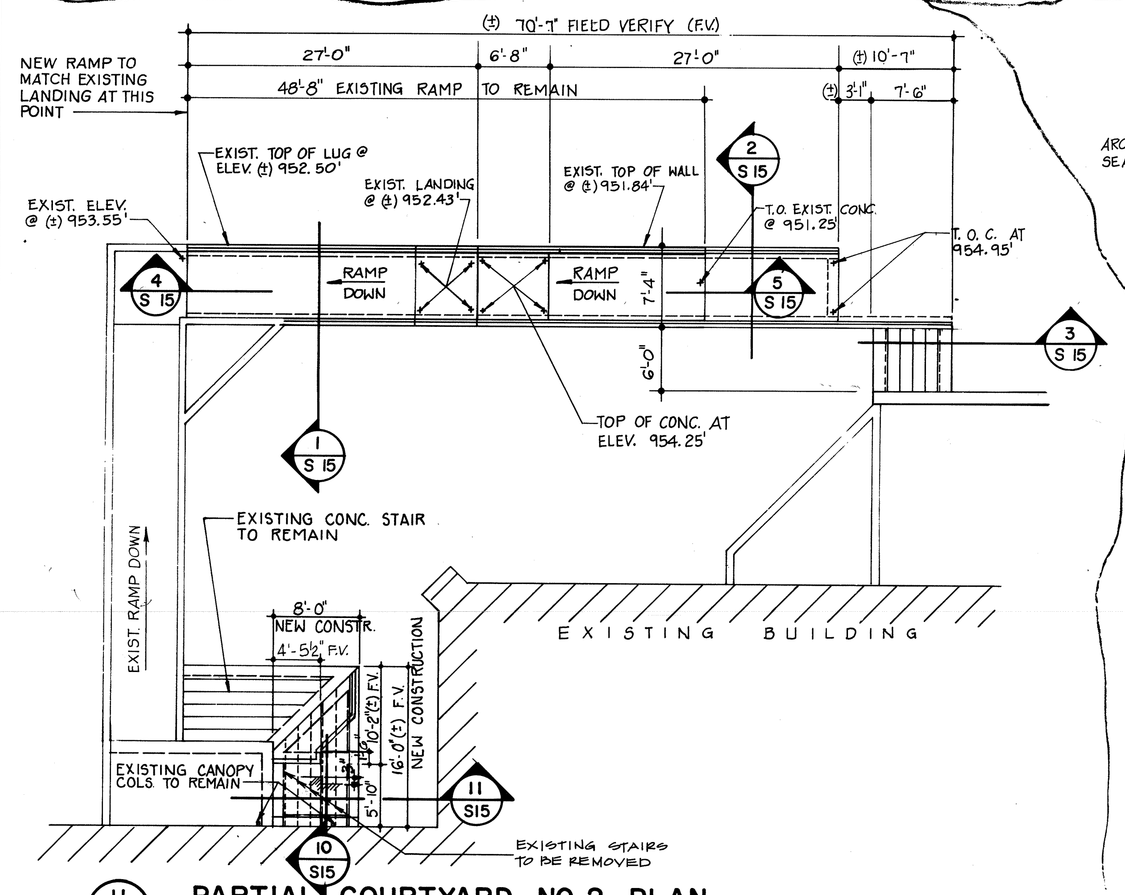

11/S7 PARTIAL COURTYARD NO. 2 PLAN
SCALE: 1/8" = 1'-0"

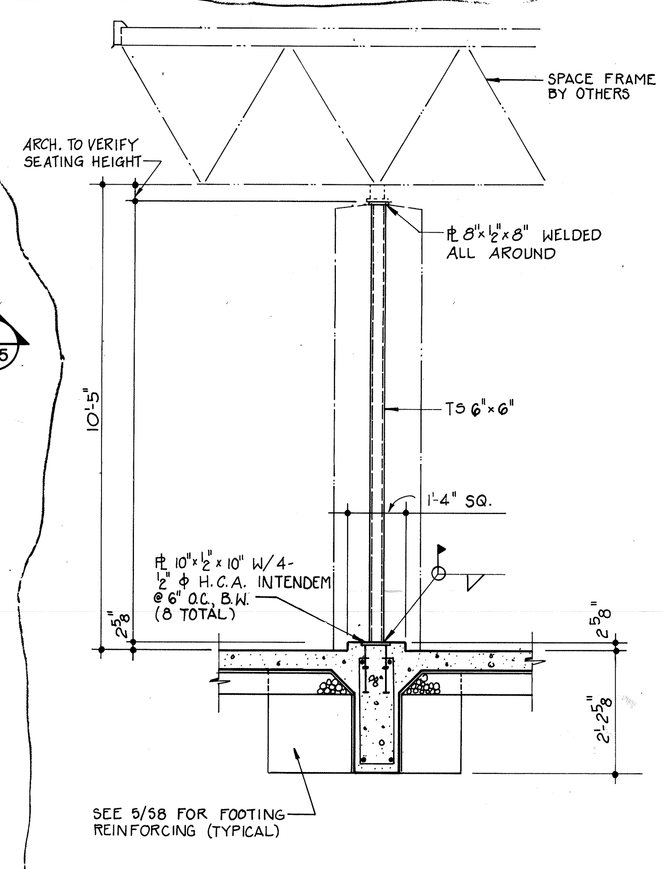

12/S7 SECTION
SCALE: 1/2" = 1'-0" (ADDITIVE ALTERNATE #2)

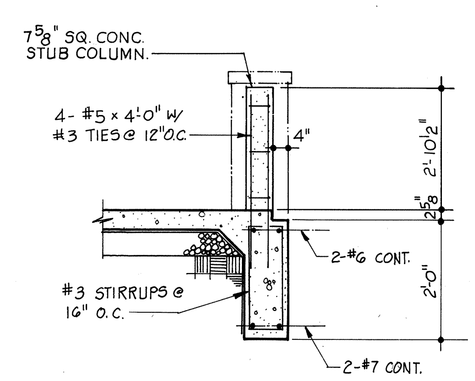

8/S7 SECTION
SCALE: 1/2" = 1'-0" (ADDITIVE ALTERNATE #2)

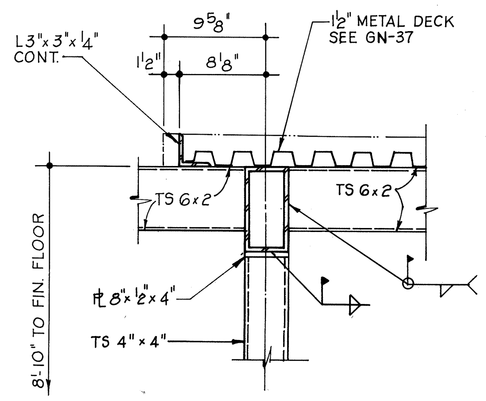

9/S7 SECTION
SCALE: 1 1/2" = 1'-0" (ADDITIVE ALTERNATE #2)

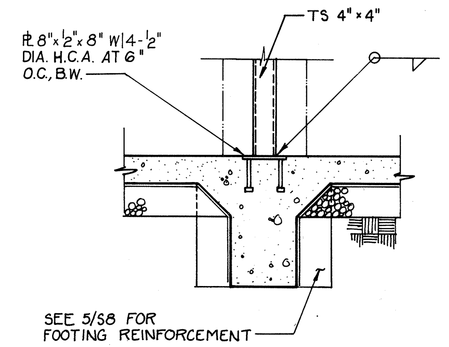

10/S7 SECTION
SCALE: 3/4" = 1'-0" (ADDITIVE ALTERNATE #2)

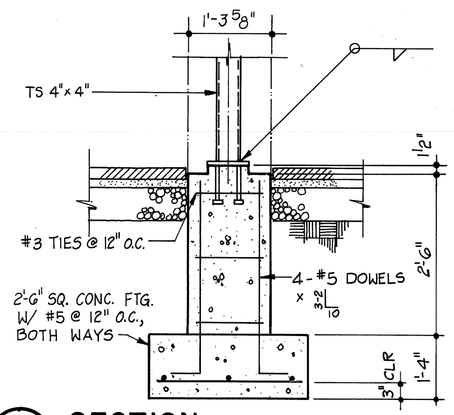

13/S7 SECTION
SCALE: 3/4" = 1'-0" (ADDITIVE ALTERNATE #2)

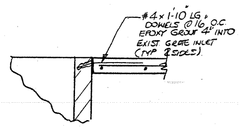

B/S7

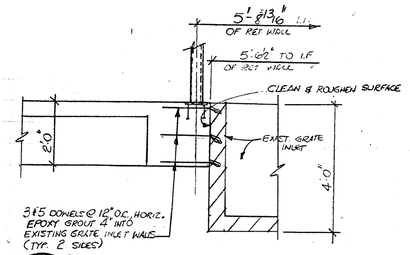

A/S7

NOTE: FOOTING TO BEAR ON UNDISTURBED SOIL OR COMPACTED NON-EXPANSIVE FILL.

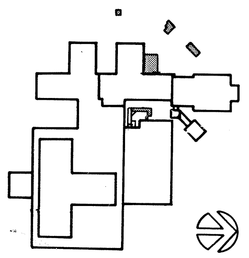

RECORD DWGS.	2-7-92	
Revisions	Date	

STATE OF TEXAS — JOHN T. WALL — 38756 — REGISTERED PROFESSIONAL ENGINEER — 5/19/89

A JOINT VENTURE OF
PHELPS/GARZA/BOMBERGER
MARMON BARCLAY SOUTER FOSTER HAYS
ARCHITECTS PLANNERS
5545 Fredericksburg Road Suite 100
San Antonio, Texas 78229

MARMON BARCLAY SOUTER FOSTER HAYS — MECH./ELECT. ENGINEERS
W. E. SIMPSON CO. INC. — STRUCTURAL ENGINEERS

STATE OF TEXAS — REGISTERED ARCHITECT — VIRGINIA B. BOMBERGER — 5-19-89

Drawing Title: PLANS & SECTIONS

Approved Project Director: Hospital Director

Project Title: 30 - BED SPINAL CORD INJURY UNIT

Building Number: 1 | Checked: C.A.F. | Drawn: J.A.B.

Location: VAMC - SAN ANTONIO, TEXAS

Date: MAY 19, 1989

Project No. 671 - 046

DRAWING NO. I-S7

Dwg. 9 of 23

Veterans Administration

VA FORM 08-6231A, MAR 1984

U.S. GOVERNMENT PRINTING OFFICE: 1984-446-