1. ALL WORK SHALL CONFORM TO 2015 INTERNATIONAL BUILDING CODE AND IN ACCORDANCE WITH THE DEPARTMENT OF VETERANS AFFAIRS REQUIREMENTS.

2. DESIGN LOADS:

A. ROOF LOAD

1. ROOF

a. DEAD LOAD TOP CHORD	25 PSF
b. DEAD LOAD BOT. CHORD	5 PSF
c. LIVE LOAD TOP CHORD	25 PSF
d. LIVE LOAD BOT. CHORD	0 PSF (U.N.O.)
e. NET UPLIFT TO JOISTS	11 PSF

B. FLOOR LOAD

a. DEAD LOAD	ACTUAL STRUCTURE
b. SUPER IMPOSED DEAD LOAD	20 PSF
c. LIVE LOAD	100 PSF

C. ROOF SNOW LOAD

1. FLAT ROOF SNOW LOAD, Pf	25 PSF
2. SNOW EXPOSURE FACTOR, Ce	1.0
3. SNOW LOAD IMPORTANCE FACTOR, I	1.2
4. THERMAL FACTOR, Ct	1.1
5. DRIFTING	PER CODE

D. WIND LOADS

1. BASIC WIND SPEED (3 SECOND GUST)	115 MPH
2. WIND IMPORTANCE FACTOR, I	1.0
3. BUILDING CATEGORY	IV
4. WIND EXPOSURE	B
5. COMPONENTS AND CLADDING DESIGN	PER ASCE 7-10

E. SEISMIC LOADS

1. CATEGORY	IV
2. Ss =	0.127
3. S1 =	0.059
4. SEISMIC IMPORTANCE FACTOR, I	1.25
5. SITE CLASS	C
6. SEISMIC DESIGN CATEGORY	C
7. DESIGN BASE SHEAR	0.047W

F. REFER TO APPLICABLE COMPONENT SPECIFICATION SECTIONS FOR ADDITIONAL LOADING REQUIREMENTS.

3. CONTRACTOR SHALL FIELD VERIFY ALL EXISTING DIMENSIONS PRIOR TO FABRICATION.

4. REFERENCE PROJECT SPECIFICATIONS FOR ADDITIONAL REQUIREMENTS.

5. IF DISCREPANCIES EXIST BETWEEN SPECIFICATIONS, CONTRACT DRAWINGS, AND/OR SHOP DRAWINGS NOTIFY THE ENGINEER OF RECORD.

6. THE CONTRACTOR SHALL REVIEW DRAWINGS FROM ALL OTHER DISCIPLINES FOR PERTINENT MISC. ITEMS OR INFORMATION RELATED TO THE STRUCTURAL WORK AND COORDINATE AS REQUIRED.

7. THE BUILDING IS NOT STRUCTURALLY STABLE UNTIL ALL CONNECTIONS, FRAMING, SHEAR WALLS, PERMANENT BRACING AND EXTERIOR LOAD-BEARING WALLS ARE COMPLETE AND HAVE ACHIEVED THEIR DESIGN STRENGTH. CONTRACTOR IS SOLELY RESPONSIBLE FOR MAINTAINING STRUCTURAL STABILITY DURING ERECTION AND CONSTRUCTION. TEMPORARY BRACING SYSTEMS ARE NOT TO BE REMOVED UNTIL STRUCTURAL WORK IS COMPLETE.

8. PROVIDE ADEQUATE SHORING DURING CONSTRUCTION TO RESIST FORCES SUCH AS WIND AND UNBALANCED LOADS DUE TO CONSTRUCTION. DO NOT BACKFILL UNTIL CONCRETE HAS CURED 14 DAYS.

9. FOUNDATIONS:

A. FOUNDATIONS ARE DESIGNED TO BEAR ON 2000 PSF FOR FOOTING ON SOIL & 15000 PSF FOR FOOTINGS ON ROCK AND 20 KSF FOR DRILLED CASSIONS.

B. COMPLY WITH ALL ASPECTS OF SOILS REPORT DATED APRIL 7, 2011 PREPARED BY ENGINEERING SURVEYS & SERVICES.

C. THE GENERAL CONTRACTOR AND FOUNDATION CONTRACTOR SHALL UNDERSTAND THE SURVEY AND GEOTECHNICAL REPORT BEFORE BIDDING THE WORK. RECOMMENDATIONSCONTAINED IN THE GEOTECHNICAL REPORT SHALL BE INCLUDED IN THE CONTRACTOR'S WORK, UNLESS SPECIFIED OR DETAILED OTHERWISE.

D. DRILLED CAISSON LENGTHS ARE ESTIMATES ONLY BASED ON INFORMATION PROVIDED IN SOILS REPORT AND SHOULD NOT BE CONSIDERED ABSOLUTE FINAL CAISSON LENGTHS. FINAL CAISSON LENGTHS SHOULD BE DETERMINED AND RECORDED DURING CONSTRUCTION.

E. CONTRACTOR SHALL REMOVE EXISTING FOOTINGS AND FOUNDATIONS THAT ARE LOCATED WITHIN THE FOOTPRINT OF THE NEW BUILDING.

F. CONTRACTOR SHALL NOTIFY ENGINEER OF ANY UNUSUAL SOIL CONDITIONS THAT ARE IN VARIANCE WITH THE GEOTECHNICAL REPORT OR WHEN DIFFERENT BEARING MATERIAL IS EVIDENT AND THERE IS A QUESTION OF BEARING CAPACITY.

10. CONCRETE:

A. CAST-IN-PLACE CONCRETE CONSTRUCTION SHALL CONFORM TO LATEST APPLICABLE AMERICAN CONCRETE INSTITUTE DOCUMENTS, ACI-301, 305, 306, 315, 318 AND 347 UNLESS OTHERWISE NOTED IN THESE CONTRACT DOCUMENTS.

B. ALL CONCRETE, UNLESS OTHERWISE NOTED, SHALL DEVELOP A 28 DAY COMPRESSIVE STRENGTH AND HAVE MAXIMUM WATER/CEMENT RATIOS AS FOLLOWS:

FOOTINGS, GRADE BEAMS, WALLS, BEAMS, COLUMNS:	4000 PSI (w/c MAX 0.45)
SLAB ON GRADE:	4000 PSI (w/c MAX 0.42)
ELEVATED COMPOSITE SLAB:	4000 PSI (w/c MAX 0.42)

REFER TO THE SPECIFICATION FOR AIR-ENTRAINED CONCRETE

C. SLABS-ON-GRADE SHALL DEVELOP A 90 DAY COMPRESSIVE STRENGTH.

D. IT IS THE INTENT OF THESE CONCRETE SPECIFICATIONS THAT THE CONTRACTOR SUPPLY CONCRETE MIXES WITH A MINIMUM AMOUNT OF WATER IN ORDER TO LIMIT PLASTIC SHRINKAGE CRACKING IN FRESHLY PLACED CONCRETE. IT IS EXPECTED THAT PRODUCING WORKABILITY FOR CONCRETE MIXES WILL REQUIRE THE ADDITION OF WATER-REDUCING CHEMICAL ADMIXTURES.

E. CONCRETE MIX DESIGNS SHALL INCLUDE ALL APPLICABLE ADMIXTURES.

F. CONCRETE SLUMP SHALL BE A MAXIMUM OF 4" +/- 1"(ASTM C-145) AS DELIVERED IN THE FIELD. CONTRACTOR MAY USE CHEMICAL ADMIXTURES ATTAIN A MAXIMUM SLUMP OF 8" FOR WORKABILITY. IF ADD MIXTURE IS TO BE ADDED IN THE FIELD IT SHALL BE ADDED THROUGH THE USE OF AN EXTERNAL MEASURING DEVICE (I.E. 5 GALLON BUCKET).

G. A MAXIMUM OF 1 GALLON OF WATER PER CUBIC YARD OF CONCRETE MAY BE WITHHELD AT THE PLANT TO BE LATER ADDED ON SITE WITH THE USE OF AN EXTERNAL MEASURING DEVICE TO PROVIDE PROPER WORKABILITY.

H. CONCRETE EXPOSED TO WEATHER, PARKED VEHICLES, AND/OR DEICING CHEMICAL SHALL CONTAIN 6% (+/- 1%) ENTRAINED AIR BY VOLUME.

I. CHAMFER ALL EXPOSED CORNERS OF CONCRETE WALLS, 3/4" UNLESS NOTED OTHERWISE.

J. ALL CONTROL JOINTS IN CONCRETE SLABS-ON-GRADE SHALL BE CUT TO 1/3 OF DEPTH WHEN USING WET-CUTTING PROCESS AND 1/4 OF THE DEPTH WHEN USING EARLY-ENTRY DRY-CUT PROCESS. CUT JOINTS AS SOON AS APPLICABLE PER PROCESS USED AFTER CONCRETE HAS BEEN PLACED WITHOUT DISLODGING AGGREGATE, OR USE KEYED COLD JOINT.

K. CUT SLABS-ON-GRADE INTO AREAS OF APPROXIMATELY 225 SQUARE FEET MAINTAINING AS CLOSE TO SQUARE AREAS AS POSSIBLE. LENGTH TO WIDTH RATIOS OF JOINTED PANELS SHALL NOT EXCEED 1.5:1. COORDINATE LOCATIONS OF CONTROL JOINTS WITH ARCHITECT.

L. CONTROL JOINTS IN WALLS SHALL BE PLACED AT 20'-0" O.C. MAXIMUM UNLESS NOTED OTHERWISE. LOCATE JOINTS BESIDE PIERS INTEGRAL WITH WALLS, NEAR CORNERS, AND IN CONCEALED LOCATIONS WHERE POSSIBLE. CONSTRUCTION JOINTS MAY BE PLACED IN LIEU OF CONTROL JOINTS AT CONTRACTOR'S DISCRETION. COORDINATE LOCATION OF CONTROL JOINTS WITH ARCHITECT.

M. PRIOR TO PLACING CONCRETE IN ANY LOCATION, IT IS THE RESPONSIBILITY OF THE GENERAL CONTRACTOR TO HAVE THOROUGHLY CHECKED AND COORDINATED ALL DIMENSIONS, ELEVATIONS, OPENINGS, RECESSES, AND BLOCKOUTS SHOWN ON ANY OF THE CONTRACT DRAWINGS. IN THE EVENT ERRORS, CONFLICTS, OR OMISSIONS EXIST, IT SHALL BE THE CONTRACTOR'S RESPONSIBILITY TO CONTACT THE ARCHITECT OR ENGINEER FOR NECESSARY CORRECTIVE ACTION.

N. EMBEDDED ITEMS ARE TO BE FURNISHED AND INSTALLED BY THE CONTRACTOR PRIOR TO PLACING CONCRETE.

O. ANCHOR RODS AND ANCHOR BOLTS SHALL BE HELD IN PLACE WITH A RIGID TEMPLATE.

P. HORIZONTAL JOINTS BEYOND THOSE SHOWN IN THE CONTRACT DOCUMENTS SHALL NOT BE CONSTRUCTED WITHOUT THE APPROVAL OF THE ARCHITECT AND ENGINEER.

11. REINFORCING STEEL:

A. ALL REINFORCING SHALL BE ASTM A615 GRADE 60, EXCEPT WELDED REINFORCING WHICH SHALL BE ASTM A706 GRADE 60.

B. ALL WELDED WIRE FABRIC SHALL BE ASTM A82 COLD DRAWN WIRE.

C. ALL ACCESSORIES FOR SUPPORTING REINFORCING SHALL BE GALVANIZED OR HAVE PLASTIC-COATED FEET.

D. PROVIDE CORNER BARS AT THE EXTERIOR FACE OF ALL WALL AND FOOTING CORNERS EQUAL TO HORIZONTAL BARS.

E. REINFORCING SHALL BE DETAILED, FABRICATED, PLACED, AND SUPPORTED IN ACCORDANCE WITH ACI 315, LATEST APPLICABLE EDITION.

F. STANDARD COVERAGE OF REINFORCING, SHALL BE AS FOLLOWS UNLESS NOTED OTHERWISE:

CAST AGAINST EARTH, PERMANENTLY EXPOSED TO WEATHER	3"
EXPOSED TO EARTH OR WEATHER (FORMED)	2"
NOT EXPOSED TO EARTH OR WEATHER: SLABS, WALLS	3/4"
BEAMS, COLUMNS	1 1/2"
AREAS IN CONTACT WITH WATER	3"

G. SPLICE LENGTH SCHEDULE:

CONC. STRENGTH (PSI)	NON-COATED	EPOXY COATED
3000	55db	83db
4000	48db	72db
5000	43db	64db

db = REINFORCEMENT BAR DIAMETER

H. REINFORCEMENT PARTIALLY EMBEDDED IN CONCRETE SHALL NOT BE FIELD BENT, EXCEPT AS SHOWN AND NOTED ON THE CONTRACT DRAWINGS OR PERMITTED BY THE ENGINEER OF RECORD.

I. ALL REINFORCEMENT AND EMBEDDED ITEMS (I.E. PLATES, ANCHOR RODS) SHALL BE ACCURATELY PLACED, ADEQUATELY SUPPORTED, AND SECURED AGAINST DISPLACEMENT BEFORE CONCRETE IS PLACED. NEITHER REINFORCEMENT NOR EMBEDDED ITEMS SHALL BE PLACED INTO FRESHLY PLACED CONCRETE UNLESS APPROVED BY THE ENGINEER OF RECORD.

12. MASONRY

A. MASONRY UNIT COMPRESSIVE STRENGTH ($f'm$) = 2000 PSI. MORTAR - TYPE S.

B. LINTELS SHALL BE STEEL BEAMS OR MASONRY BOND BEAMS AS SHOWN ON THE PLANS. OTHER OPENINGS LESS THAN 4'-0" WIDE SHALL BE A BOND BEAM WITH (2) #5 CONTINUOUS EXTENDING PAST OPENINGS A MIN. OF 2'-0".

C. GROUT ALL CELLS SOLID.

D. BOND BEAM W/ (2) #5 CONTINUOUS AT THE TOP OF WALLS & 8'-0" O.C. VERTICALLY.

E. REINFORCE MASONRY WITH #5 AT 32" O.C. FOR 8" CMU & #5 AT 24" O.C. FOR 12" CMU UNLESS NOTED OTHERWISE. IN ADDITION, REINFORCE WALL CORNERS AND JAMBS OF WINDOWS AND DOORS WITH (2) #5 EXTENDING PAST OPENINGS A MIN. 2'-0".

F. BRACE THE TOPS OF PARTITION WALLS TO THE UNDERSIDE OF DECK.

13. STRUCTURAL STEEL:

A. ALL STRUCTURAL STEEL SHALL BE DETAILED, FABRICATED AND ERECTED IN ACCORDANCE WITH AISC SPECIFICATION FOR STRUCTURAL STEEL BUILDINGS, LATEST APPLICABLE EDITION AND AISC CODE OF STANDARD PRACTICE.

B. ALL STRUCTURAL STEEL FOR WIDE FLANGE SHALL BE A992 GRADE 50 UNLESS NOTED OTHERWISE ON THE PLANS. ALL ANGLES, PLATES, AND CHANNEL SHALL BE ASTM A36 UNLESS NOTED OTHERWISE. ALL RECTANGULAR AND ROUND HSS SHAPES SHALL BE ASTM A500, GRADE B.

C. ALL BOLTS SHALL BE 3/4" DIAMETER A-325 BOLTS WITH HEAVY HEX HEADS, UNLESS NOTED OTHERWISE ON THE PLANS. ALL CONNECTIONS SHALL HAVE A MINIMUM OF TWO3/4" DIAMETER BOLTS, BEARING TYPE CONNECTIONS ONLY.

D. ALL STRUCTURAL STEEL WELDS IN THE SHOP OR THE FIELD SHALL BE PERFORMED BYA QUALIFIED WELDER AND SHALL CONFORM TO THE CURRENT REQUIREMENTS OF A.W.S.

E. SHOP WELDED AND FIELD BOLTED CONNECTIONS ARE PREFERRED, UNLESS OTHERWISE SHOWN.

F. ALL STEEL EXPOSED TO EXTERIOR AREAS SHALL BE HOT-DIP GALVANIZED AND PAINTED PER ARCHITECT UNLESS NOTED OTHERWISE.

G. THE CONTRACTOR SHALL PROVIDE SHELF ANGLES, GLASS SUPPORTS, LINTELS AND OTHER MISCELLANEOUS STEEL, AS SHOWN ON THE DRAWINGS AND AS REQUIRED TO PROVIDE SUPPORT (STABILIZATION) AROUND AND THROUGHOUT THE BUILDING. SEE ARCHITECTURAL DRAWINGS FOR ADDITIONAL MISCELLANEOUS STEEL DETAILS.

H. ALL CONNECTIONS NOT DETAILED IN THE CONSTRUCTION DOCUMENTS SHALL BE DESIGNED PER THE AISC MANUAL OF STEEL CONSTRUCTION "FRAMED BEAM CONNECTIONS" FOR AT LEAST 0.4 x BEAM TOTAL SHEAR CAPACITY, Vn/OMEGA SHOWN IN THE SELECTION BY Zx TABLE 3.2 AND SHALL ACCOUNT FOR ECCENTRICITY WHEN THE BOLT LINE IS MORE THAN 2" FROM THE SUPPORT. ALL CONNECTIONS MUST BE TWO BOLT MINIMUM. CONNECTIONDESIGN CALCULATIONS SHALL BE PREPARED UNDER THE DIRECT SUPERVISION OF AND BEAR THE SEAL OF THE SAME PROFESSIONAL ENGINEER LICENSED IN THE STATE OF MISSOURI.

14. COLD-FORMED STEEL:

A. ALL LIGHT GAGE METAL FRAMING AND CONNECTIONS SHALL BE DESIGNED, FABRICATED, AND ERECTED IN ACCORDANCE WITH AISI (SPECIFICATION FOR THE SIGN OF COLD FORMEDSTEEL STRUCTURAL MEMBERS) (AND NAAMM MLSFAS40 LIGHTWEIGHT STEEL FRAMING SYSTEMS MANUAL.)

B. ALL LIGHT GAGE METAL FRAMING SHOWN IN THESE DOCUMENTS SHALL BE IN ACCORDANCE WITH THE STEEL STUD MANUFACTURERS ASSOCIATION (SSMA).

C. ALL STRUCTURAL MEMBERS SHALL BE FORMED FROM STEEL HAVING A GALVANIZED COATING MEETING THE REQUIREMENTS OF ASTM A-655 STEEL MATERIAL SHALL HAVE A MINIMUM YIELD STRESS OF 33 KSI.

D. WELDING SHALL BE DONE IN ACCORDANCE WITH AWS D1.3 – LATEST EDITION, STRUCTURAL WELDING CODE, SHEET STEEL.

E. SUGGESTED WELD METAL AND PROCESS FOR SHOP WELDING ARE, 70 KSI WELD METAL STRENGTH. SUGGESTED METHODS FOR FIELD WELDING, 1/8" E70XX ELECTRODE-SMAW, OR GASLESS M16.

F. MINIMUM WELD THROAT THICKNESS (t) MUST MATCH OR EXCEED THE BASE STEEL THICKNESS OF THE THINNEST CONNECTED PART UNLESS NOTED OTHERWISE.

G. WEB STIFFENERS FOR STUD JOISTS SHALL BE PROVIDED AT ALL REACTION POINTS, INTERMEDIATE CONCENTRATED LOADS, AND WHERE INDICATED ON THE DRAWINGS.

H. SEQUENCING OF WELDS SHALL BE SO AS TO AVOID DISTORTION OF MEMBERS. REPLACE ALL MEMBERS WHEN BURN THROUGH DURING WELDING.

I. ALL FRAMING COMPONENTS SHALL BE CUT SQUARELY FOR ATTACHMENT TO PERPENDICULAR MEMBERS OR AS REQUIRED ON ANGULAR FIT AGAINST ABUTTING MEMBERS. MEMBERS SHALL BE HELD POSITIVELY IN PLACE UNTIL PROPERLY FASTENED.

J. NO SPLICES IN STUDS, JOISTS, OR OTHER LOAD CARRYING MEMBERS MAY BE MADE WITHOUT PRIOR ENGINEERING REVIEW AND SPECIFIC DETAILS FOR ANY SUCH SPLICE.

K. TOP AND BOTTOM TRACKS TO MATCH GAGE OF STUD.

L. INSTALL CONTINUOUS HORIZONTAL BRIDGING IN STUD SYSTEM, SPACED (VERTICAL DISTANCE) NOT TO EXCEED 4'-0" O.C. WELD OR FASTEN TO EACH STUD.

15. STEEL BAR JOISTS AND JOIST GIRDERS:

A. END SUPPORT AND END ANCHORAGE.

1. PROVIDE STANDARD DEPTH OF BEARING FOR ALL JOISTS AND JOIST GIRDERS AS SHOWN BELOW UNLESS DETAILS OTHERWISE ON THESE DRAWINGS:
   a. K SERIES - 2 1/2"
   b. LH SERIES - 5"

2. PROVIDE FLAT BEARING FOR ALL JOISTS AND JOIST GIRDERS, UNLESS SHOWN OTHERWISE ON THESE DRAWINGS. INCREASE THE DEPTH OF THE SEAT ON THE HIGH END OF SLOPED JOISTS AS REQUIRED TO PROVIDE CLEARANCE FOR THE CONNECTION.

B. DESIGN

1. ALL JOISTS AND JOIST GIRDERS SHALL CARRY THE DESIGN LOADS AS SPECIFIED IN THE SJI LOAD TABLES AS THE MINIMUM REQUIREMENT. ADDITIONALLY, THE JOISTS AND JOIST GIRDERS SHALL BE DESIGNED TO CARRY ANY OTHER LOAD TYPES AND PATTERNS AS INDICATED ON THESE DRAWINGS.

2. STEEL JOISTS, JOIST GIRDERS, BRIDGING, AND THEIR CONNECTIONS SHALL BE DESIGNED BY THE MANUFACTURER FOR A NET UPLIFT AS INDICATED ON THESE DRAWINGS.

3. JOIST GIRDERS SHALL BE DESIGNED BY THE MANUFACTURER FOR THE CONCENTRATED LOADS SHOWN ON THESE DRAWINGS.

16. POST CONSTRUCTION ANCHORS:

A. POST INSTALLED ANCHORS ARE NOT TO BE SUBSTITUTED FOR ANCHORS SHOWN ON DRAWINGS. IF CAST-IN-PLACE ANCHOR IS DETERMINED TO BE OUT OF TOLERANCE OR OMITTED CONTRACTOR MUST GENERATE REQUEST FOR INFORMATION IN REGARDS TO SOLUTION. THIS SECTION IS NOT MEANT AS A DIRECT SUBSTITUTION FOR CAST-IN-PLACE ANCHORS.

B. MECHANICAL ANCHORS SHALL BE SIMPSON TITEN HD ANCHORS UNLESS NOTED OTHERWISE. MINIMUM EMBEDMENT UNLESS NOTED OTHERWISE SHALL BE:

a. 5 3/4" FOR 1/2" DIAMETER ANCHORS
b. 5 3/4" FOR 5/8" DIAMETER ANCHORS
c. 5 3/4" FOR 3/4" DIAMETER ANCHORS

C. EPOXY ANCHORS SHALL USE HILTI HIT HY 70 ADHESIVE WITH SCREEN TUBES IN HOLLOW MASONRY & HILTI HIT HY 200 ADHESIVE IN CONCRETE UNLESS NOTED OTHERWISE ON THE DRAWINGS.

D. MINIMUM EMBEDMENT FOR EPOXY ANCHORS IN NORMAL WEIGHT CONCRETE UNLESS NOTED OTHERWISE SHALL BE:

a. 4-1/4" FOR 1/2" DIAMETER ANCHORS
b. 5" FOR 5/8" DIAMETER ANCHORS
c. 6-5/8" FOR 3/4" DIAMETER ANCHORS
d. 8-1/4" FOR 1" DIAMETER ANCHORS

E. EMBEDMENT DEPTH SHALL BE DEFINED AS THE DISTANCE FROM THE SURFACE OF THE LOAD-BEARING BASE MATERIAL TO THE DEEPEST PART OF THE ANCHOR AFTER THE ANCHOR HAS BEEN DRIVEN INTO THE HOLE.

F. OBSERVATION AND VERIFICATION OF EMBEDMENT HOLE CLEANING, DEPTH, AND EPOXY ANCHOR INSTALLATION IS REQUIRED FOR ALL EPOXY ANCHOR INSTALLATIONS.

G. EQUIVALENT ANCHORS MAY BE SUBMITTED FOR THE ENGINEER'S APPROVAL SUBMITTALS ARE THE CONTRACTOR'S RESPONSIBILITY AND MUST INCLUDE EVALUATION REPORTS FROM THE INTERNATIONAL CONFERENCE OF BUILDING OFFICIALS, CURRENT WITH THE REQUIREMENTS OF THIS PROJECT.

17. STRUCTURAL ENGINEER SITE OBSERVATIONS

A. THE CONTRACT STRUCTURAL DRAWINGS AND SPECIFICATIONS REPRESENT THE FINISHED STRUCTURE AND, EXCEPT WHERE SPECIFICALLY SHOWN, DO NOT INDICATE THE METHOD OR MEANS OF CONSTRUCTION. THE CONTRACTOR SHALL SUPERVISE AND DIRECT THE WORK AND SHALL BE SOLELY RESPONSIBLE FOR ALL CONSTRUCTION MEANS, METHODS, PROCEDURES, TECHNIQUES, AND SEQUENCE.

B. THE ENGINEER SHALL NOT HAVE CONTROL NOR CHARGE OF, AND SHALL NOT BE RESPONSIBLE FOR, CONSTRUCTION MEANS, METHODS, TECHNIQUES, SEQUENCES, OR PROCEDURES, FOR SAFETY PRECAUTIONS AND PROGRAMS IN CONNECTION WITH THE WORK, FOR THE ACTS OR OMISSION OF THE CONTRACTOR, SUBCONTRACTOR, OR ANY OTHER PERSONS PERFORMING ANY OF THE WORK, OR FOR THE FAILURE OF ANY OF THEM TO CARRY OUT THE WORK IN ACCORDANCE WITH THE CONTRACT DOCUMENTS.

C. PERIODIC SITE OBSERVATION BY FIELD REPRESENTATIVES OF LEIGH & O'KANE L.L.C. IS SOLELY FOR THE PURPOSE OF DETERMINING IF THE WORK OF THE CONTRACTOR IS PROCEEDING IN ACCORDANCE WITH THE STRUCTURAL CONTRACT DOCUMENTS. THIS LIMITED SITE OBSERVATION SHOULD NOT BE CONSTRUED AS EXHAUSTIVE OR CONTINUOUS TO CHECK THE QUALITY OR QUANTITY OF THE WORK, BUT RATHER PERIODIC IN AN EFFORT TO GUARD THE OWNER AGAINST DEFECTS OR DEFICIENCIES IN THE WORK OF THE CONTRACTOR.

18. SUBMITTALS:

A. ALL SHOP DRAWINGS AND SUBMITTALS MUST BE REVIEWED AND APPROVED BY THE CONTRACTOR PRIOR TO SUBMITTAL. ENGINEER'S REVIEW OF SHOP DRAWINGS IS LIMITED TO CHECKING FOR GENERAL CONFORMANCE WITH DESIGN DRAWINGS AND STRENGTH OF COMPONENTS AND MATERIALS. CONTRACTOR IS RESPONSIBLE FOR ANY CHANGES FROM THE DESIGN DRAWINGS, QUANTITIES, DIMENSIONAL ERRORS OR OMISSIONS IN THE SHOP DRAWINGS.

B. ALL SHOP DRAWINGS MUST BE ORIGINAL DOCUMENTS AND SHALL NOT BE REPRODUCTIONS OF THESE CONTRACT DOCUMENTS.

C. SUBMIT SHOP DRAWINGS DETAILING FABRICATION OF EACH MEMBER AND ITS CONNECTIONS. DETAIL DRAWINGS AND CALCULATIONS ARE TO BE PREPARED UNDER THE SUPERVISION AND BEARING THE SEAL AND SIGNATURE OF A LICENSED PROFESSIONAL ENGINEER IN THE STATE OF MISSOURI FOR THE FOLLOWING ITEMS:

a. COLD FORMED METAL FRAMING
b. STEEL BAR JOIST AND JOIST GIRDERS
c. STRUCTURAL STEEL CONNECTIONS (AS REQUIRED)

D. CONTRACTOR SHALL SUBMIT STRUCTURAL SHOP DRAWINGS FOR THE FOLLOWING:

a. CONCRETE MIX DESIGN AND MATERIALS
b. CONCRETE REINFORCING STEEL
c. MASONRY REINFORCING STEEL
d. STRUCTURAL STEEL
e. COLD FORMED METAL FRAMING
f. STEEL BAR JOIST AND JOIST GIRDERS

E. PROVIDE A FINAL, "FOR CONSTRUCTION" SET OF ALL SHOP DRAWINGS TO THE ENGINEER OF RECORD PRIOR TO FABRICATION OR CONSTRUCTION OF THOSE ITEMS.

PLAN SYMBOL KEY

(F?)	= FOOTING TYPE (REFER TO FOOTING SCHEDULE)
C?	= COLUMN TYPE (REFER TO COLUMN SCHEDULE)
B?	= BEAM TYPE (REFER TO BEAM SCHEDULE)
(?) B?	= BEAM OFFSET ELEVATION INDICATOR
B? (?)	= SHEAR STUD COUNT
	= BRACED FRAME ELEVATION
	= MOMENT FRAME INDICATOR
	= CANTILEVERED BEAM CONNECTION
916'-4"	= T.O. CASSION
913'-4"	= B.O. CASSION

WALL TYPES IN PLAN KEY

= LOAD BEARING STUD WALL
= LOAD BEARING STUD SHEAR WALL
= MASONRY WALL
= CONCRETE WALL

HATCH PATTERN KEY

= CONCRETE IN SECTION
= EARTH IN SECTION
= GRANULAR FILL IN SECTION
= INSULATION IN SECTION
= STEEL IN SECTION

STD. ABBRREVIATIONS

ze	ALTERNATE
A.B.	ANCHOR BOLT
ARCH.	ARCHITECT
@	AT
BM.	BEAM
BOT.	BOTTOM
B.O.	BOTTOM OF
BLDG.	BUILDING
CL.	CENTER LINE
CLR.	CLEAR
COL.	COLUMN
CONC.	CONCRETE
CONN.	CONNECTION
CONT.	CONTINUOUS
C.J.	CONTROL JOINT
DET.	DETAIL
DIA.	DIAMETER
DIM.	DIMENSION
DWG(S)	DRAWING(S)
EA.	EACH
ELEV.	ELEVATION
EL.	ELEVATION
EQ.	EQUAL
EQUIP.	EQUIPMENT
EXIST.	EXISTING
EXT.	EXTERIOR
F.S.	FAR SIDE
FIN.	FINISH
FLR.	FLOOR
FTG.	FOOTING
FOUND.	FOUNDATION
GALV.	GALVANIZED
GYP.	GYPSUM
H.S.	HEADED STUD
HI	HIGH
HORIZ.	HORIZONTAL
INSUL.	INSULATION
INT.	INTERIOR
LOC.	LOCATION
LLH	LONG LEG HORIZONTAL
LLV	LONG LEG VERTICAL
LO	LOW
MSRY.	MASONRY
MAX.	MAXIMUM
MECH.	MECHANICAL
MIN.	MINIMUM
MIR.	MIRRORED
N.S.	NEAR SIDE
N.A.	NOT APPLICABLE
N.T.S.	NOT TO SCALE
O.C.	ON CENTER
OPNG.	OPENING
PL.	PLATE
R.	RADIUS
RE:	REFERENCE
REINF.	REINFORCING
REQ'D	REQUIRED
SCHED.	SCHEDULE
SEC.	SECTION
SHT.	SHEET
SIM.	SIMILAR
SQ.	SQUARE
S.S.	STAINLESS STEEL
STL.	STEEL
T&B	TOP & BOTTOM
T.O.	TOP OF
TYP.	TYPICAL
U.N.O.	UNLESS NOTED OTHERWISE
VERT.	VERTICAL
W/	WITH
W/O	WITHOUT

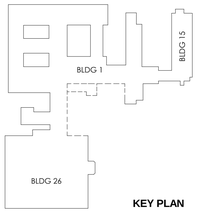

KEY PLAN

No.	Description	Date

ENGINEERS & CONSULTANTS:

CIVIL
SK Design Group, Inc.
4600 College Blvd. Suite 100
Overland Park, KS 66211
913.451.1818

STRUCTURAL
Leigh & O'Kane
9201 Ward Parkway, Suite 301
Kansas City, MO 64114
816.444.3144

MECHANICAL, ELECTRICAL, PLUMBING, TELECOM, SECURITY
InSite Group, Inc.
1950 NW Copper Oaks Cr
Blue Springs, MO 64015
816.228.3377

FIRE PROTECTION & LIFE SAFETY
FSC, Inc.
9225 Indian Creek Pkwy, Ste 300
Overland Park, KS 66210
913.722.3473

ASBESTOS ABATEMENT
Terracon
13910 W 96th Terrace
Lenexa, KS 66215
913.492.7777

COMMISSIONING
pro balance
5411 West 40 Highway
Blue Springs, MO 64015
816.228.7800

STATE OF MISSOURI
WAYNE NEIL HESS
NUMBER PE-2010019551
04/13/16
PROFESSIONAL ENGINEER

ARCHITECT:
WELLNER architects inc.
802 Broadway Blvd, 4th Floor
Kansas City, MO 64105
816.221.0017

Drawing Title: GENERAL NOTES

Approved: Kathleen R. Fogarty, Medical Center Director

Project Title: CONSTRUCT OEF/OIF AND SPECIALTY CARE ADDITION

Location: 4801 LINWOOD BLVD, KANSAS CITY, MO 64128

Date: 30 March 2016 | Checked: WNH | Drawn: CMS

Project Number: 589-CA3-472

Building Number: 1

Drawing Number: S-001

Dwg. 25 of 188

Office of Construction and Facilities Management

Department of Veterans Affairs

4/13/2016 12:31:38 PM

VA FORM 08-6231

SOLICITATION FOR CONSTRUCTION PROPOSAL DOCUMENTS

SECTIONS OMITTED FROM DEDUCT 7: 16/S-002 AND OMIT FROM ALL SUBSEQUENT DEDUCTS.

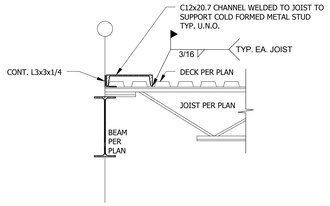

16 TYP. METAL STUD WALL SUPPORT ON DECK
3/4" = 1'-0"

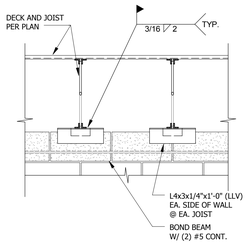

12 CMU WALL SUPPORT DETAIL
3/4" = 1'-0"

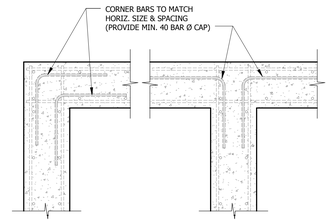

9 HORIZ. CORNER BARS DETAIL
3/4" = 1'-0"

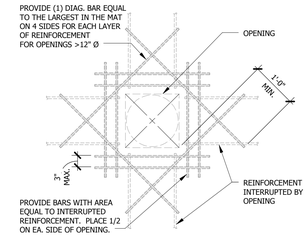

4 WALL & FLOOR PENETRATION DETAIL
3/4" = 1'-0"

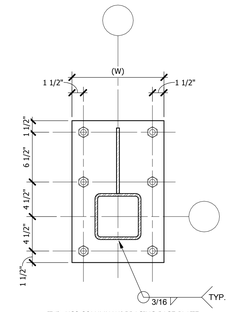

TYP. HSS COLUMN W/ BRACING BASE PLATE

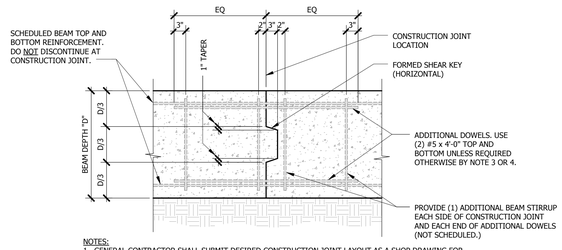

NOTES:
1. GENERAL CONTRACTOR SHALL SUBMIT DESIRED CONSTRUCTION JOINT LAYOUT AS A SHOP DRAWING FOR APPROVAL A MINIMUM OF TWO WEEKS PRIOR TO POUR.
2. CONSTRUCTION JOINT LOCATIONS SHALL BE COORDINATED WITH REINFORCING STEEL SUPPLIER AND ERECTOR.
3. ACCEPTABLE JOINT LOCATIONS ARE AS FOLLOWS:
   a. FOR BEAMS NOT SUPPORTING INTERSECTING BEAMS: PLACE JOINT MIDDLE THIRD OF SPAN.
   b. FOR BEAMS SUPPORTING INTERSECTING BEAMS, CHECK WITH STRUCTURAL ENGINEER.
4. FOR JOINT LOCATIONS OTHER THAN WITHIN MIDDLE THIRD OF SPAN, CONTRACTOR SHALL COORDINATE REQUIRED ADDITIONAL REINFORCEMENT WITH THE ENGINEER ON THE SHOP DRAWINGS.

8 GRADE BEAM CONSTRUCTION JOINT
3/4" = 1'-0"

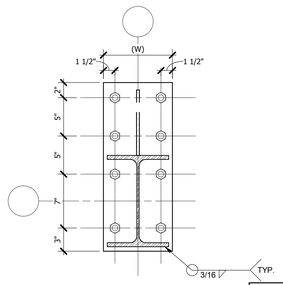

TYP. WF COLUMN W/ BRACING BASE PLATE

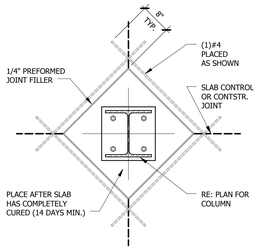

3 ISOLATION JOINT
3/4" = 1'-0"

SECTIONS OMITTED FROM DEDUCT 4: 14 & 15/S-002 AND OMIT FROM ALL SUBSEQUENT DEDUCTS.

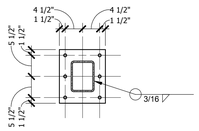

15 ELEVATOR BEAM EMBED INTO CMU/CONCRETE DETAIL
3/4" = 1'-0"

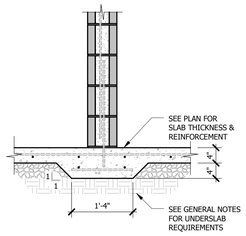

11 THICKENED SLAB AT MASONRY WALL
3/4" = 1'-0"

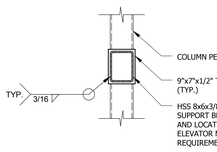

14 ELEVATOR RAIL SUPPORT BEAM CONN. TO COL. DETAIL
3/4" = 1'-0"

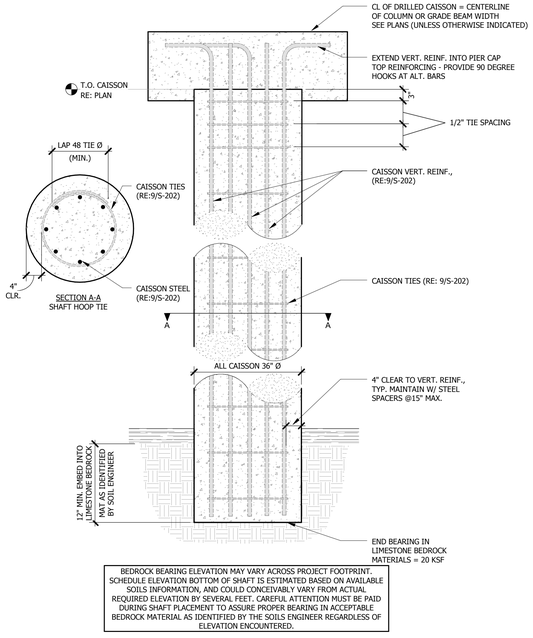

BEDROCK BEARING ELEVATION MAY VARY ACROSS PROJECT FOOTPRINT. SCHEDULE ELEVATION BOTTOM OF SHAFT IS ESTIMATED BASED ON AVAILABLE SOILS INFORMATION, AND COULD CONCEIVABLY VARY FROM ACTUAL REQUIRED ELEVATION BY SEVERAL FEET. CAREFUL ATTENTION MUST BE PAID DURING SHAFT PLACEMENT TO ASSURE PROPER BEARING IN ACCEPTABLE BEDROCK MATERIAL AS IDENTIFIED BY THE SOILS ENGINEER REGARDLESS OF ELEVATION ENCOUNTERED.

10 TYP. CONCRETE CAISSON DETAIL
3/4" = 1'-0"

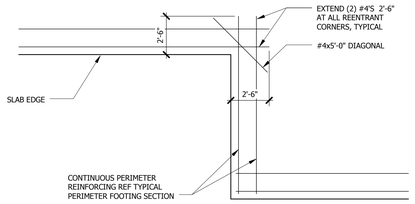

7 TYPICAL REENTRANT CORNER REINF. DETAIL
1/4" = 1'-0"

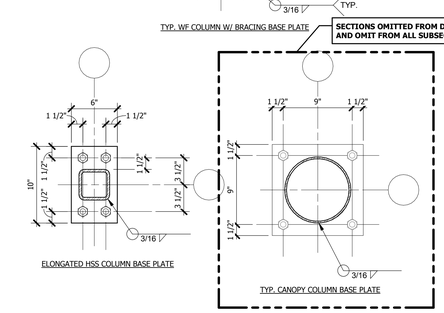

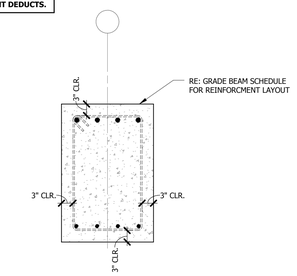

2 TYPICAL GRADE BEAM REINFORCEING
3/4" = 1'-0"

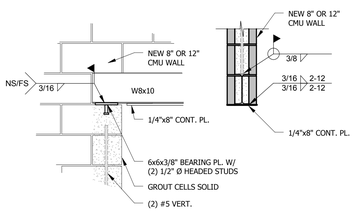

13 TYP. STEEL LINTEL DETAIL
3/4" = 1'-0"

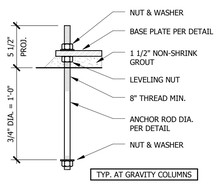

6 ANCHOR BOLT DETAIL
1 1/2" = 1'-0"

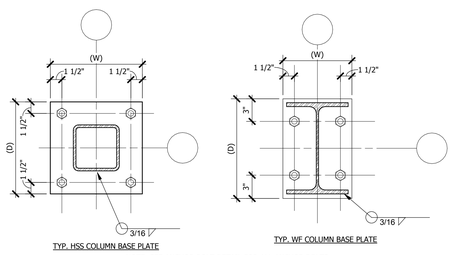

NOTE: SEE ANCHOR BOLT DETAIL FOR ALL ANCHOR BOLTS

COL. SIZE	PLATE DIM. (W)	PLATE DIM. (D)	THICKNESS (T)
HSS 4X4	10"	10"	3/4"
HSS 6X6	12"	12"	3/4"
HSS 8.625X.25	12"	12"	3/4"
W10X49	11"	11"	3/4"
W12X40	9"	13"	3/4"

5 BASE PLATE DETAIL
1 1/2" = 1'-0"

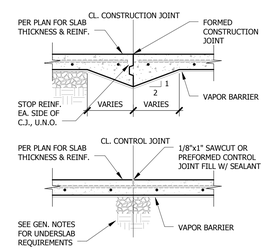

1 SLAB JOINT DETAILS
3/4" = 1'-0"

No.	Description	Date

ENGINEERS & CONSULTANTS:

CIVIL
SK Design Group, Inc.
4600 College Blvd, Suite 100
Overland Park, KS 66211
913.451.1818

STRUCTURAL
Leigh & O'Kane
9201 Ward Parkway, Suite 301
Kansas City, MO 64114
816.444.3144

MECHANICAL, ELECTRICAL, PLUMBING, TELECOM, SECURITY
InSite Group, Inc.
1950 NW Copper Oaks Cr
Blue Springs, MO 64015
816.228.3377

FIRE PROTECTION & LIFE SAFETY
FSC, Inc.
9225 Indian Creek Pkwy, Ste 300
Overland Park, KS 66210
913.722.3473

ASBESTOS ABATEMENT
Terracon
13910 W 96th Terrace
Lenexa, KS 66215
913.492.7777

COMMISSIONING
Pro Balance, Inc.
5411 West 40 Highway
Blue Springs, MO 64015
816.228.7800

STATE OF MISSOURI WAYNE NEEL HESS NUMBER PE-2010018955 PROFESSIONAL ENGINEER 5/10/16

ARCHITECT:
WELLNER architects inc.
Wellner Architects, Inc.
802 Broadway Blvd, 4th Floor
Kansas City, MO 64105
816.221.0017

Drawing Title: TYPICAL SECTIONS

Approved: Kathleen R. Fogarty, Medical Center Director

Project Title: CONSTRUCT OEF/OIF AND SPECIALTY CARE ADDITION

Location: 4801 LINWOOD BLVD, KANSAS CITY, MO 64128

Date: 30 March 2016 | Checked: WNH | Drawn: CMS

Project Number: 589-CA3-472

Building Number: 1

Drawing Number: S-002

Dwg. 26 of 188

Office of Construction and Facilities Management

Department of Veterans Affairs

5/10/2016 3:00:10 PM

VA FORM 08-6231

SOLICITATION FOR CONSTRUCTION PROPOSAL DOCUMENTS

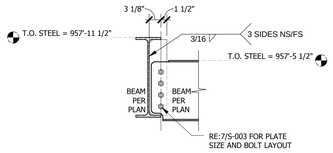

⑱ DIAGONAL BEAM TO BEAM CONN. PLATE DETAIL
3/4" = 1'-0"

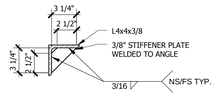

⑰ JOIST SUPPORT TO BEAM WEB
1 1/2" = 1'-0"

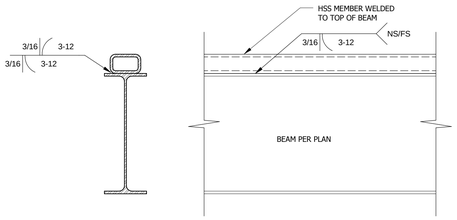

⑯ TYPICAL HSS WELDED TO BEAM DETAIL
1 1/2" = 1'-0"

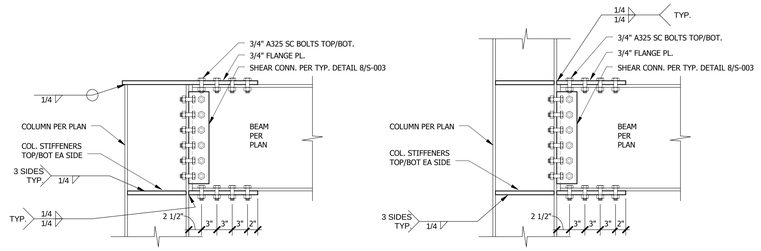

⑫ MOMENT CONNECTION DETAIL
1" = 1'-0"

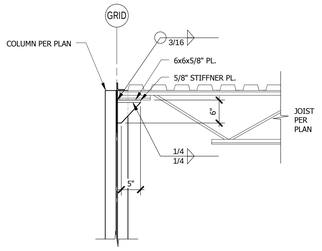

⑩ JOIST BEARING AT WIDE FLANGE COL.
3/4" = 1'-0"

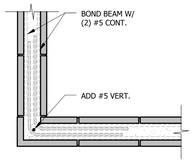

⑤ BOND BEAM CORNER DETAIL
3/4" = 1'-0"

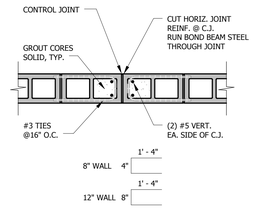

⑥ CMU WALL CONTROL JOINT DETAIL
3/4" = 1'-0"

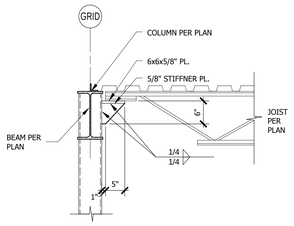

⑨ JOIST BEARING ON HSS COLUMN DETAIL
3/4" = 1'-0"

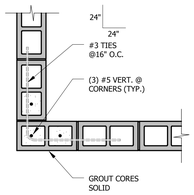

③ CMU WALL CORNER DETAIL
3/4" = 1'-0"

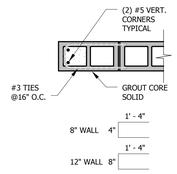

④ CMU WALL END DETAIL
3/4" = 1'-0"

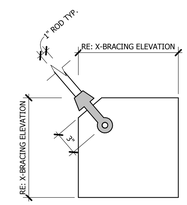

⑮ TYPICAL GUSSET PLATE DETAIL
1 1/2" = 1'-0"

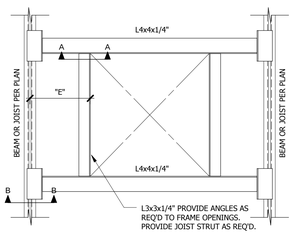

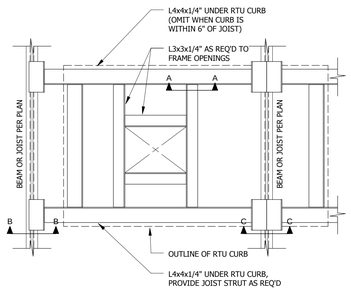

NOTE:
TYP. ROOF OPENING DETAIL SHOWN APPLIES TO ALL ROOF OPENINGS WHERE LEAST DIM. IS 13" OR LARGER. REINFORCE ROOF OPENINGS LESS THAN 13" BY WELDING 16 GAGE SHEET METAL 1'-0" WIDER THAN OPENING TO METAL ROOF DECK.

WHERE DIMENSION "E" IS LESS THAN 6" ANGLE MAY BE OMITTED.

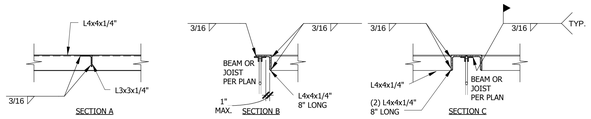

⑪ RTU SUPPORT DETAILS
3/4" = 1'-0"

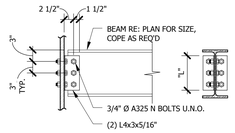

CONNECTION SCHEDULE		
NOMINAL BEAM DEPTH	ROWS OF BOLTS	ANGLE LENGTH "L"
W8 TO W10	2	5 1/2"
W12 TO W14	3	8 1/2"
W16	4	11 1/2"
W18	5	1' - 2 1/2"
W21	6	1' - 5 1/2"
W24 TO W27	7	1' - 8 1/2"

CONTRACTORS OPTIONS:
SHOP WELD ANGLES TO EITHER BEAM OR SUPPORTING MEMBER. CAPACITY SHALL NOT BE LESS THAN CAPACITY OF THE BOLTED CONNECTION INDICATED.

⑧ TYP. BEAM TO COL. SECTION
3/4" = 1'-0"

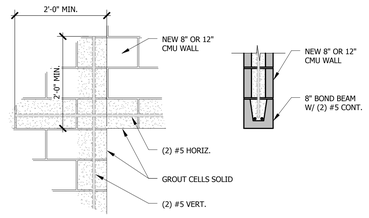

② TYP. MASONRY LINTEL DETAIL
3/4" = 1'-0"

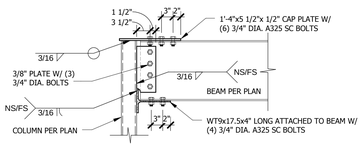

⑭ HSS MOMENT FRAME DETAIL
3/4" = 1'-0"

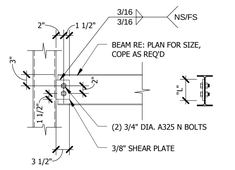

CONNECTION SCHEDULE		
NOMINAL BEAM DEPTH	ROWS OF BOLTS	PLATE LENGTH "L"
W8 TO W10	2	5 1/2"
W12 TO W14	3	8 1/2"
W16	4	11 1/2"
W18	5	1' - 2 1/2"
W21	6	1' - 5 1/2"
W24 TO W27	7	1' - 8 1/2"

⑦ TYP. BEAM TO HSS COL. SECTION
3/4" = 1'-0"

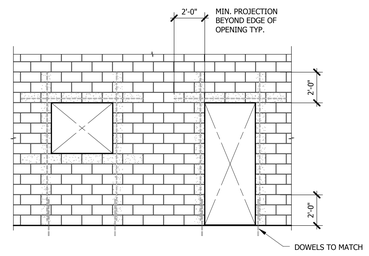

① TYP. CMU WALL OPENINGS DETAIL
1/4" = 1'-0"

No.	Description	Date

ENGINEERS & CONSULTANTS:

CIVIL
SK Design Group, Inc. Since 1989
SK Design Group, Inc.
4600 College Blvd., Suite 100
Overland Park, KS 66211
913.451.1818

STRUCTURAL
Leigh & O'Kane
Leigh & O'Kane
9201 Ward Parkway, Suite 301
Kansas City, MO 64114
816.444.3144

MECHANICAL, ELECTRICAL, PLUMBING, TELECOM, SECURITY
InSite Group, Inc. Consulting Engineers
InSite Group, Inc.
1950 NW Copper Oaks Cr
Blue Springs, MO 64015
816.228.3377

FIRE PROTECTION & LIFE SAFETY
FSC, Inc. Consulting Engineers
FSC, Inc.
9225 Indian Creek Pkwy, Ste 300
Overland Park, KS 66210
913.722.3473

ASBESTOS ABATEMENT
Terracon Consulting Engineers and Scientists
Terracon
13910 W 96th Terrace
Lenexa, KS 66215
913.492.7777

COMMISSIONING
pb pro balance
Pro Balance, Inc.
5411 West 40 Highway
Blue Springs, MO 64015
816.228.7800

STATE OF MISSOURI
WAYNE NEEL HESS
NUMBER PE-2010019551
04/13/16
PROFESSIONAL ENGINEER

ARCHITECT:

WELLNER architects inc.
Wellner Architects, Inc.
802 Broadway Blvd. 4th Floor
Kansas City, MO 64105
816.221.0017

Drawing Title: TYPICAL SECTIONS

Approved: Kathleen R. Fogarty, Medical Center Director

Project Title: CONSTRUCT OEF/OIF AND SPECIALTY CARE ADDITION

Location: 4801 LINWOOD BLVD, KANSAS CITY, MO 64128

Date: 30 March 2016 | Checked: WNH | Drawn: CMS

Project Number: 589-CA3-472

Building Number: 1

Drawing Number: S-003

Dwg. 27 of 188

Office of Construction and Facilities Management

Department of Veterans Affairs

4/13/2016 12:31:41 PM

VA FORM 08-6231

SOLICITATION FOR CONSTRUCTION PROPOSAL DOCUMENTS

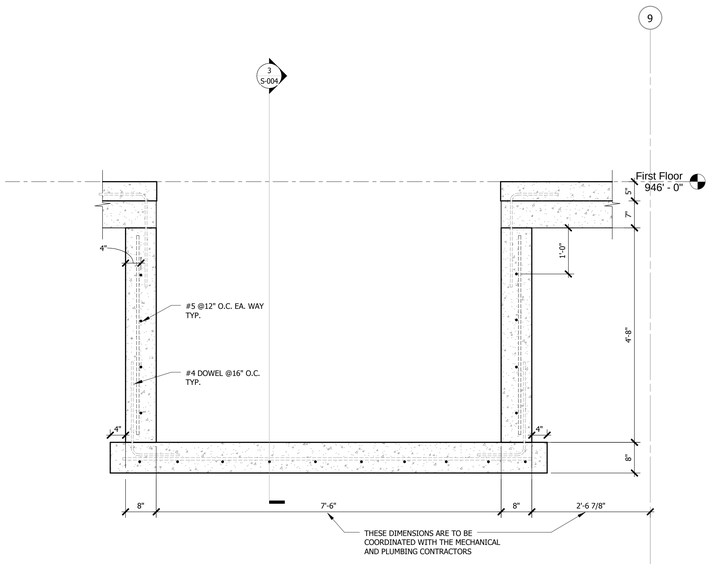

4 DUCT ENCLOSURE 2
3/4" = 1'-0"

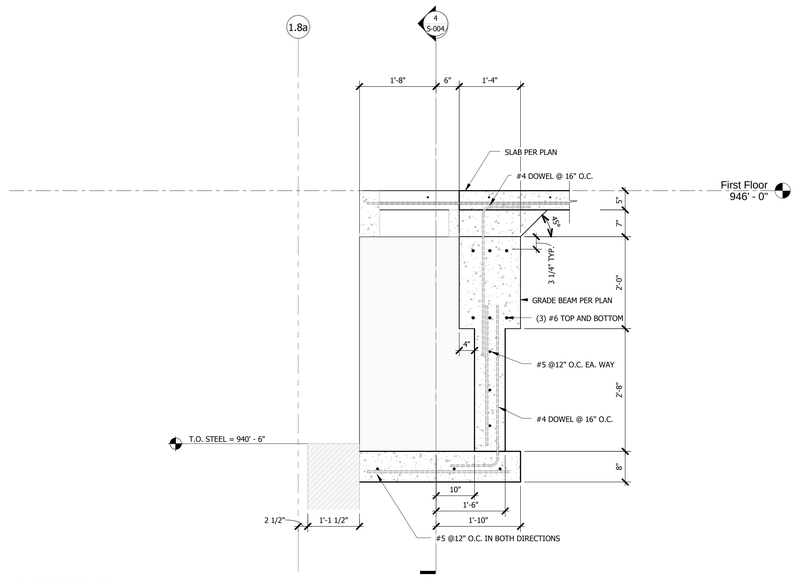

3 DUCT ENCLOSURE 1
3/4" = 1'-0"

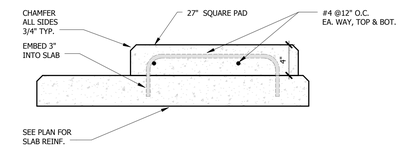

2 TYP. HOUSEKEEPING PAD DETAIL
1 1/2" = 1'-0"

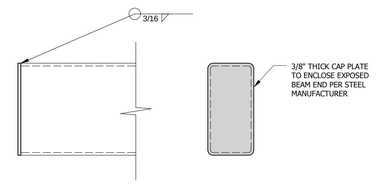

GRIND ALL WELDS SMOOTH

NOTE: DETAIL APPLIES TO EXPOSED BEAM ENDS AT THE DRIVE AND WALKWAY CANOPIES

1 VESTIBULE BEAM CAP
1 1/2" = 1'-0"

No.	Description	Date

ENGINEERS & CONSULTANTS:

CIVIL
SK Design Group, Inc.
4600 College Blvd, Suite 100
Overland Park, KS 66211
913.451.1818

STRUCTURAL
Leigh & O'Kane
9201 Ward Parkway, Suite 301
Kansas City, MO 64114
816.444.3144

MECHANICAL, ELECTRICAL, PLUMBING, TELECOM, SECURITY
InSite Group, Inc.
1950 NW Copper Oaks Cr
Blue Springs, MO 64015
816.228.3377

FIRE PROTECTION & LIFE SAFETY
FSC, Inc.
9225 Indian Creek Pkwy, Ste 300
Overland Park, KS 66210
913.722.3473

ASBESTOS ABATEMENT
Terracon
13910 W 96th Terrace
Lenexa, KS 66215
913.492.7777

COMMISSIONING
Pro Balance, Inc.
5411 West 40 Highway
Blue Springs, MO 64015
816.228.7800

STATE OF MISSOURI
WAYNE NEIL HESS
NUMBER PE-2010019551
04/13/16
PROFESSIONAL ENGINEER

ARCHITECT:

WELLNER architects inc.
Wellner Architects, Inc.
802 Broadway Blvd, 4th Floor
Kansas City, MO 64105
816.221.0017

Drawing Title: TYPICAL SECTIONS

Approved: Kathleen R. Fogarty, Medical Center Director

Project Title: CONSTRUCT OEF/OIF AND SPECIALTY CARE ADDITION

Location: 4801 LINWOOD BLVD, KANSAS CITY, MO 64128

Date	Checked	Drawn
30 March 2016	WNH	CMS

Project Number: 589-CA3-472
Building Number: 1
Drawing Number: S-004
Dwg. 28 of 188

Office of Construction and Facilities Management
Department of Veterans Affairs

4/13/2016 12:31:41 PM

VA FORM 08-6231

SOLICITATION FOR CONSTRUCTION PROPOSAL DOCUMENTS

DEDUCT SHEET REFERENCE INFORMATION:
REFER TO S-101A FOR DEDUCT 4 CHANGES.
REFER TO S-101B FOR DEDUCT 7 CHANGES.

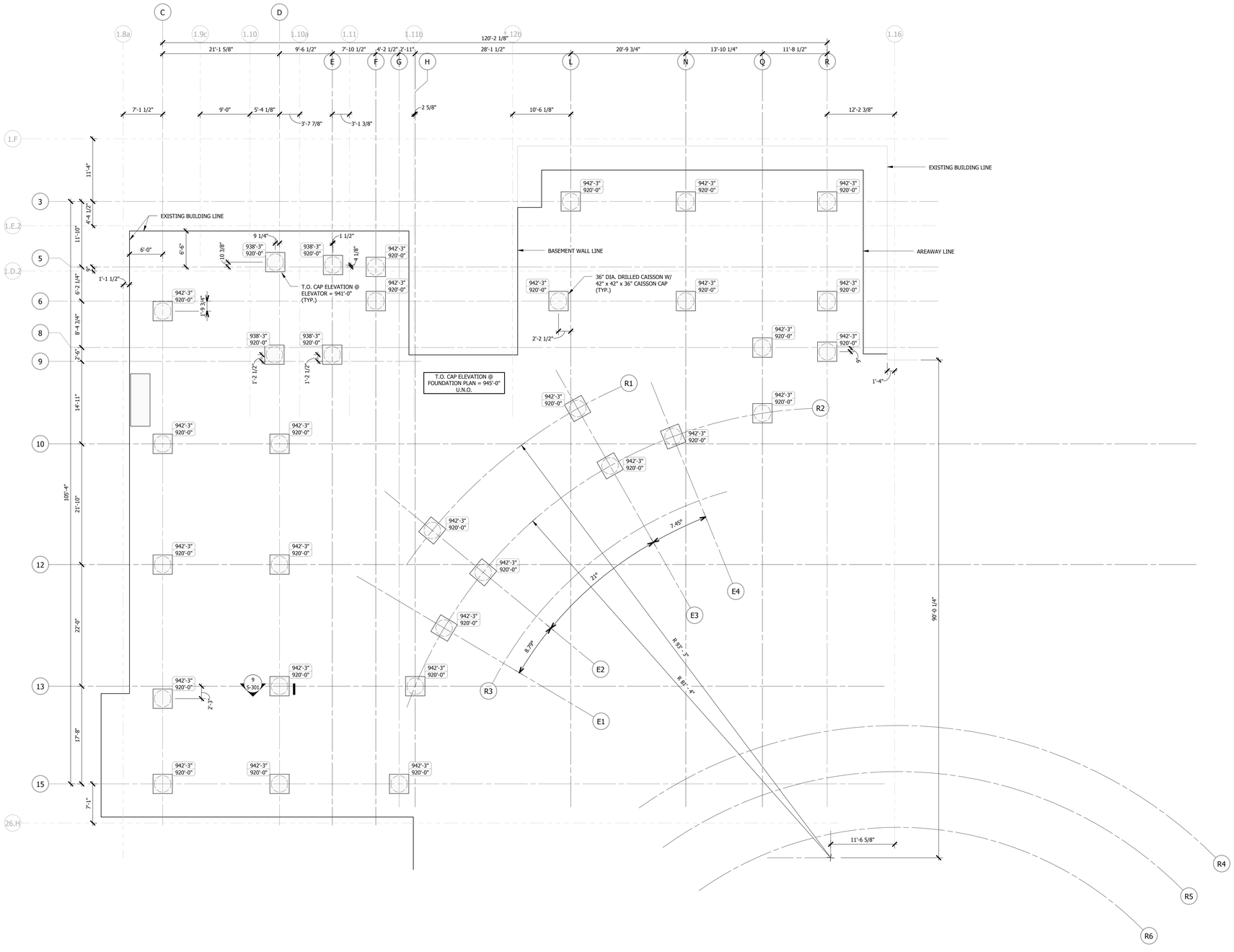

1 CAISSON PLAN (BASE BID)
1/8" = 1'-0"

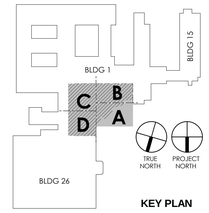

KEY PLAN

CAISSON PLAN NOTES

1. BOTTOM OF DRILLED CAISSON ELEVATIONS SHOWN ARE APPROXIMATE ELEVATIONS BASED ON OWNER'S GEOTECHNICAL INFORMATION PROVIDED WITH THIS PROJECT. THE CONTRACTOR IS RESPONSIBLE FOR DETERMINING FINAL BASE ELEVATION THROUGH THE USE OF THE INFORMATION CONTAINED HEREIN AND COOPERATION WITH THE MATERIAL TESTING RESULTS.
2. CONTRACTOR SHALL BE RESPONSIBLE FOR LOCATING ALL UNDERGROUND ITEMS PRIOR TO DRILLING CAISSONS. IF UNDERGROUND ITEMS ARE FOUND TO INTERFERE WITH DRILLED CAISSONS. THE CONTRACTOR SHALL BE RESPONSIBLE FOR THE REMOVAL AND/OR RELOCATION OF SAID ITEMS PER OWNER.

CAISSON SCHEDULE

DIAMETER	VERT. REINF.	TIES	CAP SIZE	CAP REINF.
3' - 0"	(10) #8	#4 @ 12" O.C.	42"x42"x35"	#5 @ 8" O.C. EA. WAY

No.	Description	Date

ENGINEERS & CONSULTANTS:

CIVIL
SK Design Group, Inc. Since 1989
SK Design Group, Inc.
4600 College Blvd. Suite 100
Overland Park, KS 66211
913.451.1818

STRUCTURAL
Leigh & O'Kane
Leigh & O'Kane
9201 Ward Parkway, Suite 301
Kansas City, MO 64114
816.444.3144

MECHANICAL, ELECTRICAL, PLUMBING, TELECOM, SECURITY
InSite Group, Inc. Consulting Engineers
InSite Group, Inc.
1950 NW Copper Oaks Cr
Blue Springs, MO 64015
816.228.3377

FIRE PROTECTION & LIFE SAFETY
FSC, Inc. Consulting Engineers
FSC, Inc.
9225 Indian Creek Pkwy, Ste 300
Overland Park, KS 66210
913.722.3473

ASBESTOS ABATEMENT
Terracon Consulting Engineers and Scientists
Terracon
13910 W 96th Terrace
Lenexa, KS 66215
913.492.7777

COMMISSIONING
pb pro balance
Pro Balance, Inc.
5411 West 40 Highway
Blue Springs, MO 64015
816.228.7800

STATE OF MISSOURI
WAYNE NEEL HESS
NUMBER PE-2010019551
04/13/16
PROFESSIONAL ENGINEER

ARCHITECT:
WELLNER architects inc.
Wellner Architects, Inc.
802 Broadway Blvd, 4th Floor
Kansas City, MO 64105
816.221.0017

Drawing Title: CAISSON PLAN, BLDG 1, BASE BID

Approved: Kathleen R. Fogarty, Medical Center Director

Project Title: CONSTRUCT OEF/OIF AND SPECIALTY CARE ADDITION

Location: 4801 LINWOOD BLVD, KANSAS CITY, MO 64128

Date: 30 March 2016 | Checked: WNH | Drawn: CMS

Project Number: 589-CA3-472

Building Number: 1

Drawing Number: S-101

Dwg. 29 of 188

Office of Construction and Facilities Management

Department of Veterans Affairs

4/13/2016 12:31:42 PM

VA FORM 08-6231

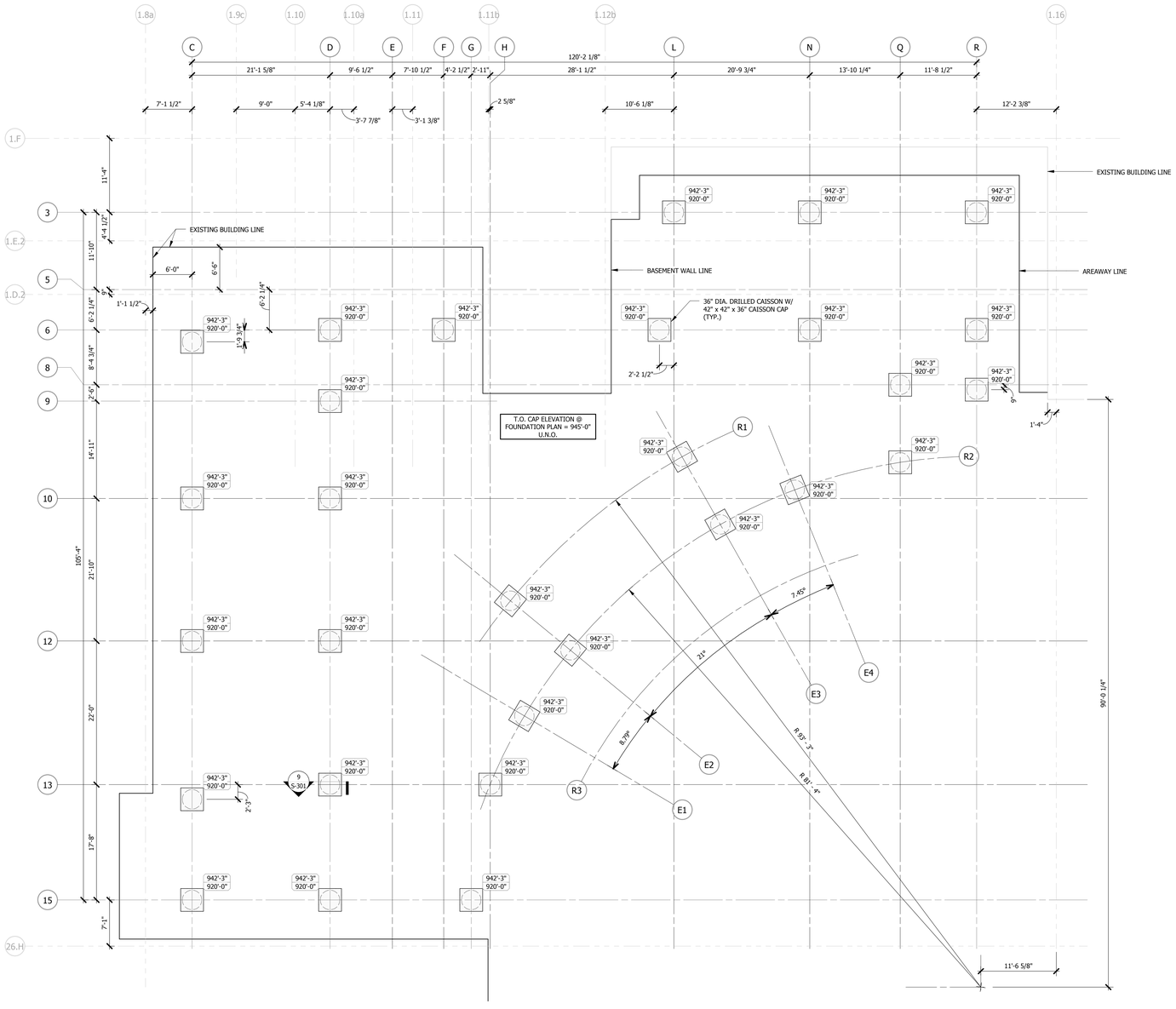

1 CAISSON PLAN (DEDUCTS 4,5 & 6)
1/8" = 1'-0"

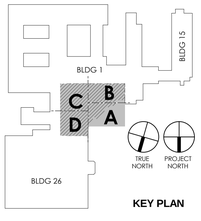

KEY PLAN

CAISSON PLAN NOTES

1. BOTTOM OF DRILLED CAISSON ELEVATIONS SHOWN ARE APPROXIMATE ELEVATIONS BASED ON OWNER'S GEOTECHNICAL INFORMATION PROVIDED WITH THIS PROJECT. THE CONTRACTOR IS RESPONSIBLE FOR DETERMINING FINAL BASE ELEVATION THROUGH THE USE OF THE INFORMATION CONTAINED HEREIN AND COOPERATION WITH THE MATERIAL TESTING RESULTS.
2. CONTRACTOR SHALL BE RESPONSIBLE FOR LOCATING ALL UNDERGROUND ITEMS PRIOR TO DRILLING CAISSONS. IF UNDERGROUND ITEMS ARE FOUND TO INTERFERE WITH DRILLED CAISSONS. THE CONTRACTOR SHALL BE RESPONSIBLE FOR THE REMOVAL AND/OR RELOCATION OF SAID ITEMS PER OWNER.

CAISSON SCHEDULE

DIAMETER	VERT. REINF.	TIES	CAP SIZE	CAP REINF.
3' - 0"	(10) #8	#4 @ 12" O.C.	42"x42"x35"	#5 @ 8" O.C. EA. WAY

No.	Description	Date

ENGINEERS & CONSULTANTS:

CIVIL — SK Design Group, Inc. — 4600 College Blvd. Suite 100, Overland Park, KS 66211 — 913.451.1818

STRUCTURAL — Leigh & O'Kane — 9201 Ward Parkway, Suite 301, Kansas City, MO 64114 — 816.444.3144

MECHANICAL, ELECTRICAL, PLUMBING, TELECOM, SECURITY — InSite Group, Inc. — 1950 NW Copper Oaks Cr, Blue Springs, MO 64015 — 816.228.3377

FIRE PROTECTION & LIFE SAFETY — FSC, Inc. — 9225 Indian Creek Pkwy, Ste 300, Overland Park, KS 66210 — 913.722.3473

ASBESTOS ABATEMENT — Terracon — 13910 W 96th Terrace, Lenexa, KS 66215 — 913.492.7777

COMMISSIONING — Pro Balance, Inc. — 5411 West 40 Highway, Blue Springs, MO 64015 — 816.228.7800

STATE OF MISSOURI — WAYNE NEEL HESS — NUMBER PE-2010019551 — PROFESSIONAL ENGINEER — 04/13/16

ARCHITECT:

WELLNER architects inc.
Wellner Architects, Inc.
802 Broadway Blvd, 4th Floor
Kansas City, MO 64105
816.221.0017

Drawing Title: CAISSON PLAN, BLDG 1, DEDUCTS 4,5,6

Approved: Kathleen R. Fogarty, Medical Center Director

Project Title: CONSTRUCT OEF/OIF AND SPECIALTY CARE ADDITION

Location: 4801 LINWOOD BLVD, KANSAS CITY, MO 64128

Date: 30 March 2016 | Checked: WNH | Drawn: CMS

Project Number: 589-CA3-472

Building Number: 1

Drawing Number: S-101.A

Dwg. 30 of 188

Office of Construction and Facilities Management

Department of Veterans Affairs

4/13/2016 12:34:17 PM

VA FORM 08-6231

CONSTRUCTION DOCUMENTS 100% SUBMISSION

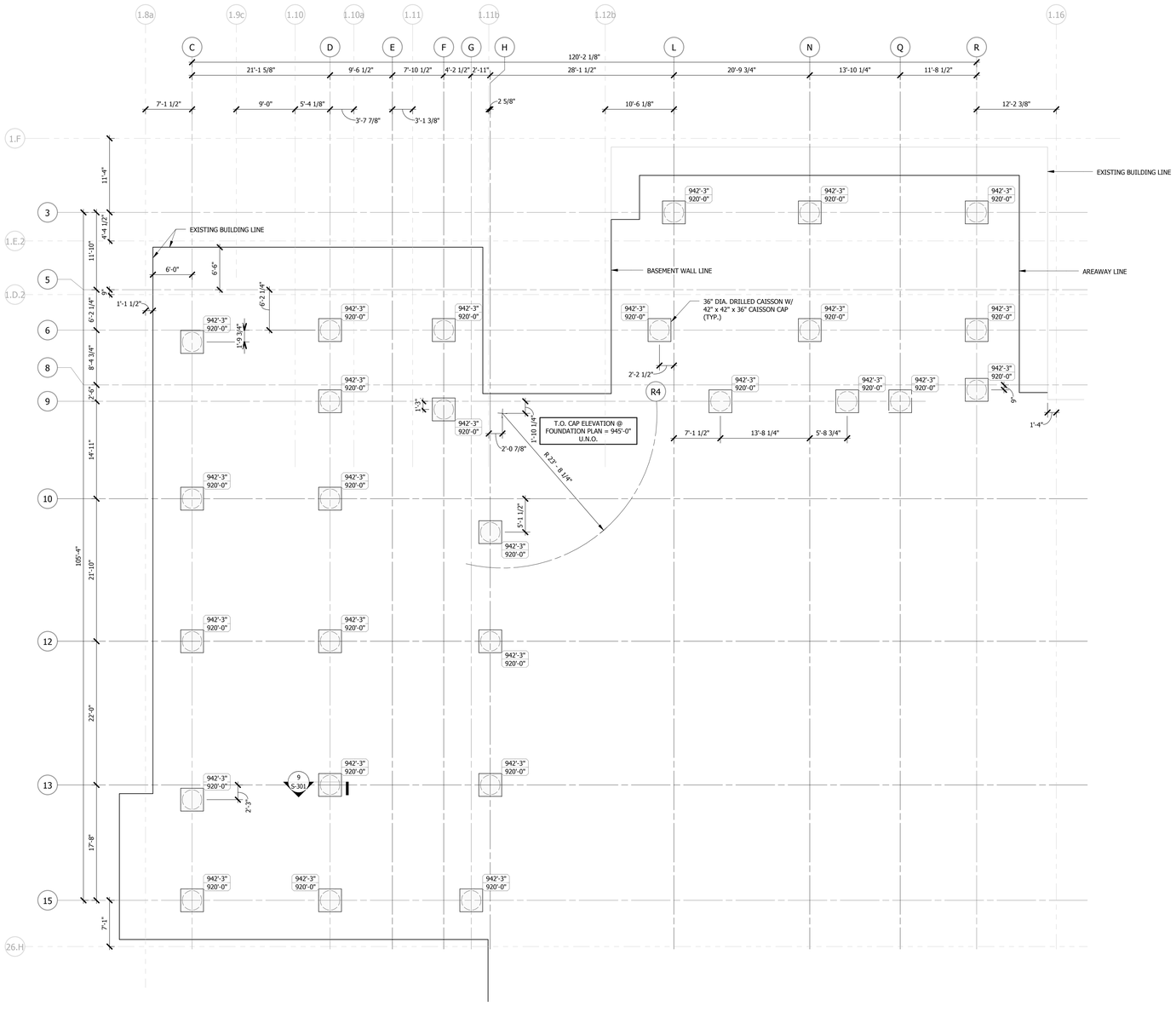

1 CAISSON PLAN (DEDUCT 7)
1/8" = 1'-0"

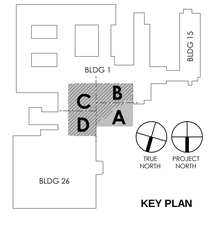

KEY PLAN

CAISSON PLAN NOTES

1. BOTTOM OF DRILLED CAISSON ELEVATIONS SHOWN ARE APPROXIMATE ELEVATIONS BASED ON OWNER'S GEOTECHNICAL INFORMATION PROVIDED WITH THIS PROJECT. THE CONTRACTOR IS RESPONSIBLE FOR DETERMINING FINAL BASE ELEVATION THROUGH THE USE OF THE INFORMATION CONTAINED HEREIN AND COOPERATION WITH THE MATERIAL TESTING RESULTS.
2. CONTRACTOR SHALL BE RESPONSIBLE FOR LOCATING ALL UNDERGROUND ITEMS PRIOR TO DRILLING CAISSONS. IF UNDERGROUND ITEMS ARE FOUND TO INTERFERE WITH DRILLED CAISSONS. THE CONTRACTOR SHALL BE RESPONSIBLE FOR THE REMOVAL AND/OR RELOCATION OF SAID ITEMS PER OWNER.

CAISSON SCHEDULE

DIAMETER	VERT. REINF.	TIES	CAP SIZE	CAP REINF.
3' - 0"	(10) #8	#4 @ 12" O.C.	42"x42"x35"	#5 @ 8" O.C. EA. WAY

No.	Description	Date

ENGINEERS & CONSULTANTS:

CIVIL
SK Design Group, Inc.
4600 College Blvd. Suite 100
Overland Park, KS 66211
913.451.1818

STRUCTURAL
Leigh & O'Kane
9201 Ward Parkway, Suite 301
Kansas City, MO 64114
816.444.3144

MECHANICAL, ELECTRICAL, PLUMBING, TELECOM, SECURITY
InSite Group, Inc.
1950 NW Copper Oaks Cr
Blue Springs, MO 64015
816.228.3377

FIRE PROTECTION & LIFE SAFETY
FSC, Inc.
9225 Indian Creek Pkwy, Ste 300
Overland Park, KS 66210
913.722.3473

ASBESTOS ABATEMENT
Terracon
13910 W 96th Terrace
Lenexa, KS 66215
913.492.7777

COMMISSIONING
Pro Balance, Inc.
5411 West 40 Highway
Blue Springs, MO 64015
816.228.7800

STATE OF MISSOURI
WAYNE NEEL HESS
NUMBER PE-2010019551
04/13/16
PROFESSIONAL ENGINEER

ARCHITECT:
WELLNER architects inc.
Wellner Architects, Inc.
802 Broadway Blvd, 4th Floor
Kansas City, MO 64105
816.221.0017

Drawing Title: CAISSON PLAN, BLDG 1, DEDUCT 7

Approved: Kathleen R. Fogarty, Medical Center Director

Project Title: CONSTRUCT OEF/OIF AND SPECIALTY CARE ADDITION

Location: 4801 LINWOOD BLVD, KANSAS CITY, MO 64128

Date: 30 March 2016 | Checked: WNH | Drawn: CMS

Project Number: 589-CA3-472

Building Number: 1

Drawing Number: S-101.B

Dwg. 31 of 188

Office of Construction and Facilities Management

Department of Veterans Affairs

4/13/2016 12:35:08 PM

VA FORM 08-6231

CONSTRUCTION DOCUMENTS 100% SUBMISSION

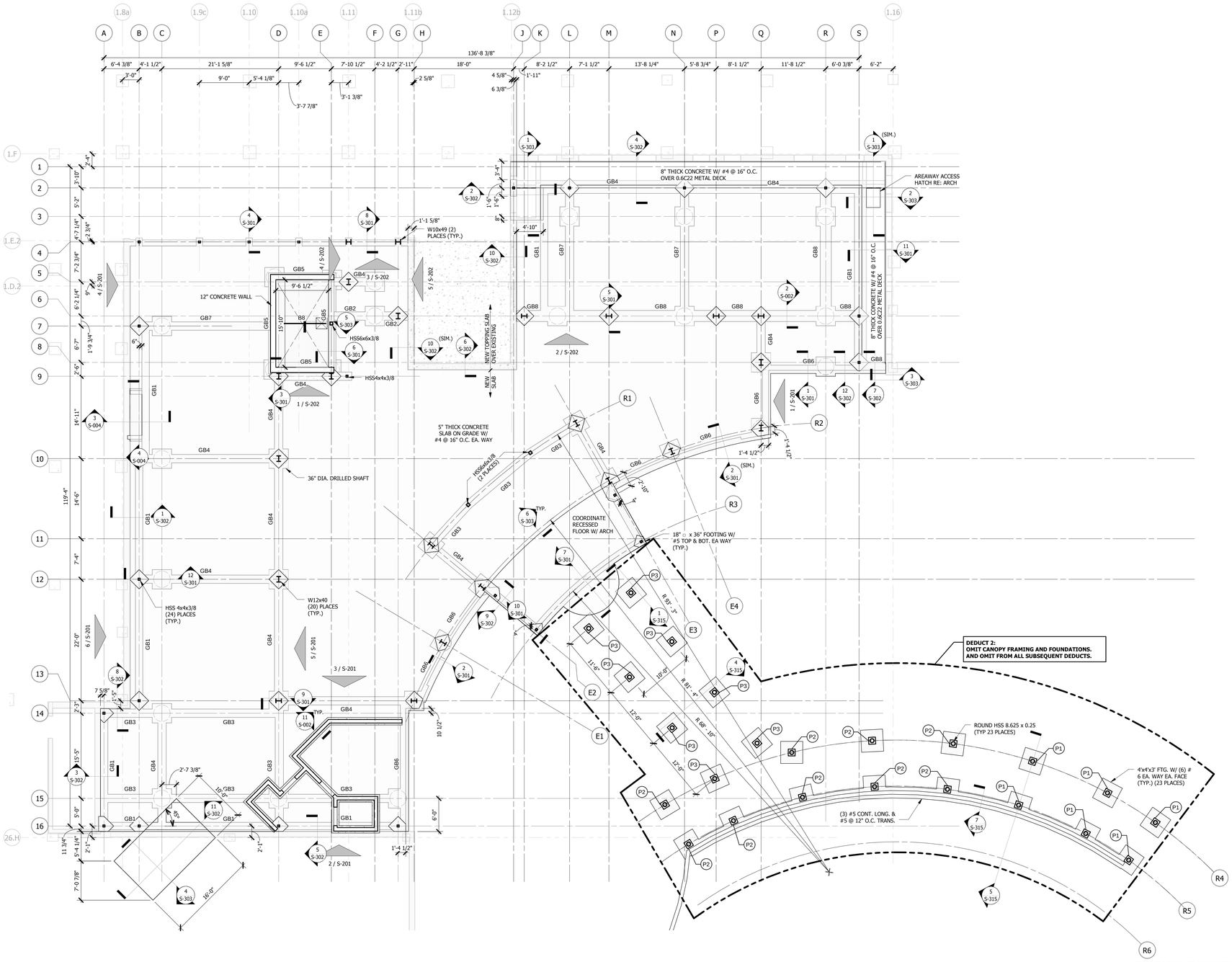

1 FOUNDATION PLAN (BASE BID & DEDUCT 2)
1/8" = 1'-0"

DEDUCT SHEET REFERENCE INFORMATION:
REFER TO S-111A FOR DEDUCT 4,5 & 6 CHANGES.
REFER TO S-111B FOR DEDUCT 7 CHANGES.

DEDUCT 2:
OMIT CANOPY FRAMING AND FOUNDATIONS.
AND OMIT FROM ALL SUBSEQUENT DEDUCTS.

PILASTER SCHEDULE

CALLOUT	COUNT	T.O. PILASTER
P1	6	945'-0"
P2	9	945'-6"
P3	8	946'-1"

GRADE BEAM SCHEDULE

TYPE MARK	TOP REINFORCING	BOTTOM REINFORCING	TIE REINFORCING	WIDTH	HEIGHT
GB1	(3) #6 BARS	(3) #6 BARS	#3 TIES @ 10" O.C.	1' - 4"	2' - 0"
GB2	(3) # 10 BARS	(3) #8 BARS	#3 TIES @ 6" O.C.	1' - 6"	2' - 0"
GB3	(3) # 10 BARS	(3) #8 BARS	#3 TIES @ 8" O.C.	1' - 6"	2' - 0"
GB4	(3) # 8 BARS	(3) #8 BARS	#3 TIES @ 10" O.C.	1' - 6"	2' - 0"
GB5	(2) # 5 BARS	(3) #10 BARS	#3 TIES @ 10" O.C.	1' - 6"	3' - 0"
GB6	(3) # 8 BARS	(3) #8 BARS	#3 TIES @ 10" O.C.	1' - 6"	3' - 0"
GB7	(3) # 10 BARS	(3) #8 BARS	#3 TIES @ 10" O.C.	1' - 6"	3' - 0"
GB8	(4) # 10 BARS	(4) #8 BARS	#3 TIES @ 8" O.C.	2' - 0"	3' - 0"

BEAM SCHEDULE

CALLOUT	MEMBER SIZE
B1	W8X31
B2	W14X22
B3	W16X26
B4	W18X35
B5	W21X50
B6	W24X62
B7	HSS8X4X3/8
B8	HSS8X6X3/8
B9	HSS12X4X3/8
B10	HSS12X6X3/8
B11	C8X11.5

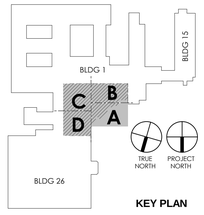

KEY PLAN

FOUNDATION PLAN NOTES:

1. TOP OF CONCRETE SLAB ELEVATION AT 1ST FLOOR = 946'-0".
2. TOP OF FOOTING ELEVATION AT 1ST FLOOR = 945'-0" UNLESS NOTED OTHERWISE.
3. 5" SLAB ON GRADE REINFORCED WITH #4@16" O.C. AND 15 MIL VAPOR BARRIER OVER 6" ROCK.
4. REFERENCE GEOTECHNICAL AND SPECIFACTIONS FOR ALL UNDERSLAB REQUIREMENTS.
5. #4x5'-0" LONG AT ALL RE-ENTRANT CORNERS.
6. DURING INSTALLATION OF ALL POST CONSTRUCTION ANCHORS, CARE MUST BE TAKEN TO AVIOID ALL REINFORCING.
7. ISOLATION JOINTS PER DETAIL 3/S-002.
8. SLAB CONTROL AND CONSTRUCTION JOINTS PER DETAIL 1/S-002. CONSTRUCTION JOINTS MAY BE SUBSTITUTED FOR CONTROL JOINTS AT THE CONTRACTOR'S DISCRETION.
9. CONTRACTOR TO COORDINATE ALL FLOOR AND SLAB PENETRATIONS AND RECESSES WITH ALL OTHER DISCIPLINES. COORDINATE WITH MEP FOR HOUSEKEEPING PADS.
10. REFER TO ARCHITECTURAL FOR ALL DIMENSIONS NOT SHOWN ON THESE DRAWINGS.
11. REFER TO ARCHITECTURAL FOR SLAB SLOPES TO DRAINS.
12. REFER TO ELEVATOR MANUFACTURER FOR ELEVATOR HSS BEAM QUANTITY AND LOCATION.

No.	Description	Date

ENGINEERS & CONSULTANTS:

CIVIL — SK Design Group, Inc. — 4600 College Blvd, Suite 100, Overland Park, KS 66211 — 913.451.1818
STRUCTURAL — Leigh & O'Kane — 9201 Ward Parkway, Suite 301, Kansas City, MO 64114 — 816.444.3144
MECHANICAL, ELECTRICAL, PLUMBING, TELECOM, SECURITY — InSite Group, Inc. — 1950 NW Copper Oaks Cr, Blue Springs, MO 64015 — 816.228.3377
FIRE PROTECTION & LIFE SAFETY — FSC, Inc. — 9225 Indian Creek Pkwy, Ste 300, Overland Park, KS 66210 — 913.722.3473
ASBESTOS ABATEMENT — Terracon — 13910 W 96th Terrace, Lenexa, KS 66215 — 913.492.7777
COMMISSIONING — Pro Balance, Inc. — 5411 West 40 Highway, Blue Springs, MO 64015 — 816.228.7800

STATE OF MISSOURI — WAYNE NEEL HESS — NUMBER PE-2010019551 — 04/13/16 — PROFESSIONAL ENGINEER

ARCHITECT:
WELLNER architects inc.
Wellner Architects, Inc.
802 Broadway Blvd. 4th Floor
Kansas City, MO 64105
816.221.0017

Drawing Title: FOUNDATION PLAN, BLDG 1, BASE BID AND DEDUCT 2

Approved: Kathleen R. Fogarty, Medical Center Director

Project Title: CONSTRUCT OEF/OIF AND SPECIALTY CARE ADDITION

Location: 4801 LINWOOD BLVD, KANSAS CITY, MO 64128

Date: 30 March 2016 | Checked: WNH | Drawn: CMS

Project Number: 589-CA3-472

Building Number: 1

Drawing Number: S-111

Dwg. 32 of 188

Office of Construction and Facilities Management

Department of Veterans Affairs

4/13/2016 12:31:44 PM

VA FORM 08-6231

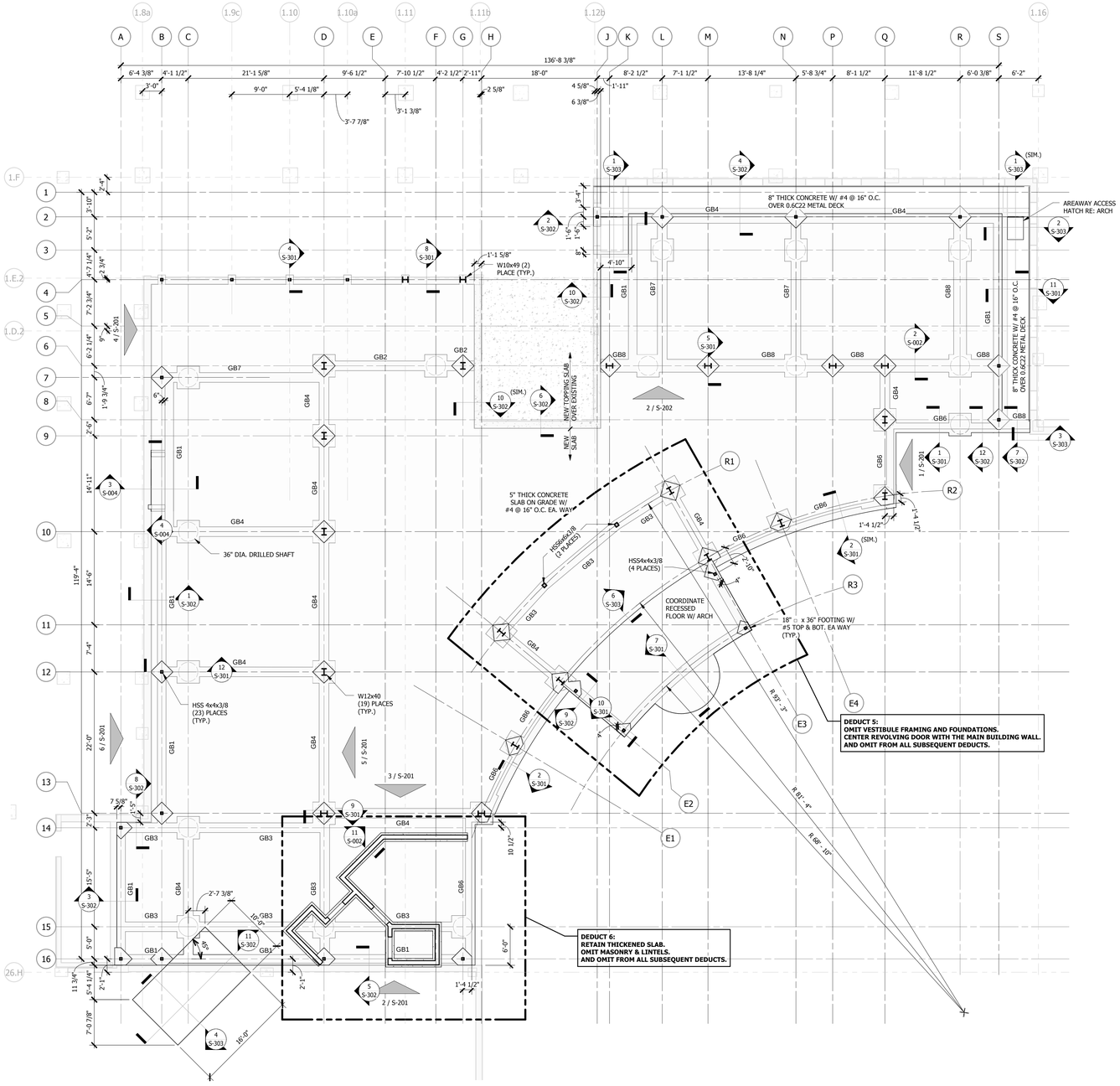

1 FOUNDATION PLAN (DEDUCTS 4,5 & 6)
1/8" = 1'-0"

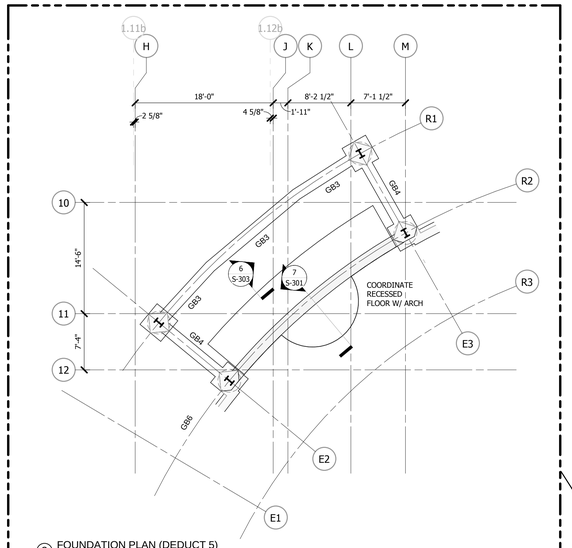

2 FOUNDATION PLAN (DEDUCT 5)
1/8" = 1'-0"

GRADE BEAM SCHEDULE

TYPE MARK	TOP REINFORCING	BOTTOM REINFORCING	TIE REINFORCING	WIDTH	HEIGHT
GB1	(3) #6 BARS	(3) #6 BARS	#3 TIES @ 10" O.C.	1' - 4"	2' - 0"
GB2	(3) # 8 BARS	(3) #8 BARS	#3 TIES @ 6" O.C.	1' - 6"	2' - 0"
GB3	(3) # 10 BARS	(3) #8 BARS	#3 TIES @ 8" O.C.	1' - 6"	2' - 0"
GB4	(3) # 8 BARS	(3) #8 BARS	#3 TIES @ 10" O.C.	1' - 6"	2' - 0"
GB6	(3) # 8 BARS	(3) #8 BARS	#3 TIES @ 10" O.C.	1' - 6"	3' - 0"
GB7	(3) # 10 BARS	(3) #8 BARS	#3 TIES @ 10" O.C.	1' - 6"	3' - 0"
GB8	(4) # 10 BARS	(4) #8 BARS	#3 TIES @ 8" O.C.	2' - 0"	3' - 0"

BEAM SCHEDULE

CALLOUT	MEMBER SIZE
B2	W14X22
B3	W16X26
B4	W18X35
B5	W21X50
B6	W24X62
B7	HSS8X4X3/8
B10	HSS12X6X3/8
B11	C8X11.5
B12	W24X55

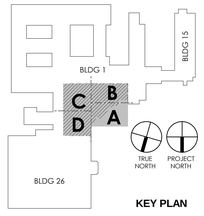

KEY PLAN

FOUNDATION PLAN NOTES:

1. TOP OF CONCRETE SLAB ELEVATION AT 1ST FLOOR = 946'-0".
2. TOP OF FOOTING ELEVATION AT 1ST FLOOR = 945'-0" UNLESS NOTED OTHERWISE.
3. 5" SLAB ON GRADE REINFORCED WITH #4@16" O.C. AND 15 MIL VAPOR BARRIER OVER 6" ROCK.
4. REFERENCE GEOTECHNICAL AND SPECIFACTIONS FOR ALL UNDERSLAB REQUIREMENTS.
5. #4x5'-0" LONG AT ALL RE-ENTRANT CORNERS.
6. DURING INSTALLATION OF ALL POST CONSTRUCTION ANCHORS, CARE MUST BE TAKEN TO AVIOD ALL REINFORCING.
7. ISOLATION JOINTS PER DETAIL 3/S-002.
8. SLAB CONTROL AND CONSTRUCTION JOINTS PER DETAIL 1/S-002. CONSTRUCTION JOINTS MAY BE SUBSTITUTED FOR CONTROL JOINTS AT THE CONTRACTOR'S DISCRETION.
9. CONTRACTOR TO COORDINATE ALL FLOOR AND SLAB PENETRATIONS AND RECESSES WITH ALL OTHER DISCIPLINES. COORDINATE WITH MEP FOR HOUSEKEEPING PADS.
10. REFER TO ARCHITECTURAL FOR ALL DIMENSIONS NOT SHOWN ON THESE DRAWINGS.
11. REFER TO ARCHITECTURAL FOR SLAB SLOPES TO DRAINS.
12. REFER TO ELEVATOR MANUFACTURER FOR ELEVATOR HSS BEAM QUANTITY AND LOCATION.

No.	Description	Date

ENGINEERS & CONSULTANTS:

CIVIL
SK Design Group, Inc.
4600 College Blvd, Suite 100
Overland Park, KS 66211
913.451.1818

STRUCTURAL
Leigh & O'Kane
9201 Ward Parkway, Suite 301
Kansas City, MO 64114
816.444.3144

MECHANICAL, ELECTRICAL, PLUMBING, TELECOM, SECURITY
InSite Group, Inc.
1950 NW Copper Oaks Cr
Blue Springs, MO 64015
816.228.3377

FIRE PROTECTION & LIFE SAFETY
FSC, Inc.
9225 Indian Creek Pkwy, Ste 300
Overland Park, KS 66210
913.722.3473

ASBESTOS ABATEMENT
Terracon
13910 W 96th Terrace
Lenexa, KS 66215
913.492.7777

COMMISSIONING
pro balance
5411 West 40 Highway
Blue Springs, MO 64015
816.228.7800

STATE OF MISSOURI
WAYNE NEEL HESS
NUMBER PE-2010019551
04/13/16
PROFESSIONAL ENGINEER

ARCHITECT:
WELLNER architects inc.
802 Broadway Blvd, 4th Floor
Kansas City, MO 64105
816.221.0017

Drawing Title: FOUNDATION PLAN, BLDG 1, DEDUCTS 4,5,6

Approved: Kathleen R. Fogarty, Medical Center Director

Project Title: CONSTRUCT OEF/OIF AND SPECIALTY CARE ADDITION

Location: 4801 LINWOOD BLVD, KANSAS CITY, MO 64128

Date: 30 March 2016 | Checked: WNH | Drawn: CMS

Project Number: 589-CA3-472

Building Number: 1

Drawing Number: S-111.A

Dwg. 33 of 188

Office of Construction and Facilities Management

Department of Veterans Affairs

VA FORM 08-6231

CONSTRUCTION DOCUMENTS 100% SUBMISSION

4/13/2016 12:34:19 PM

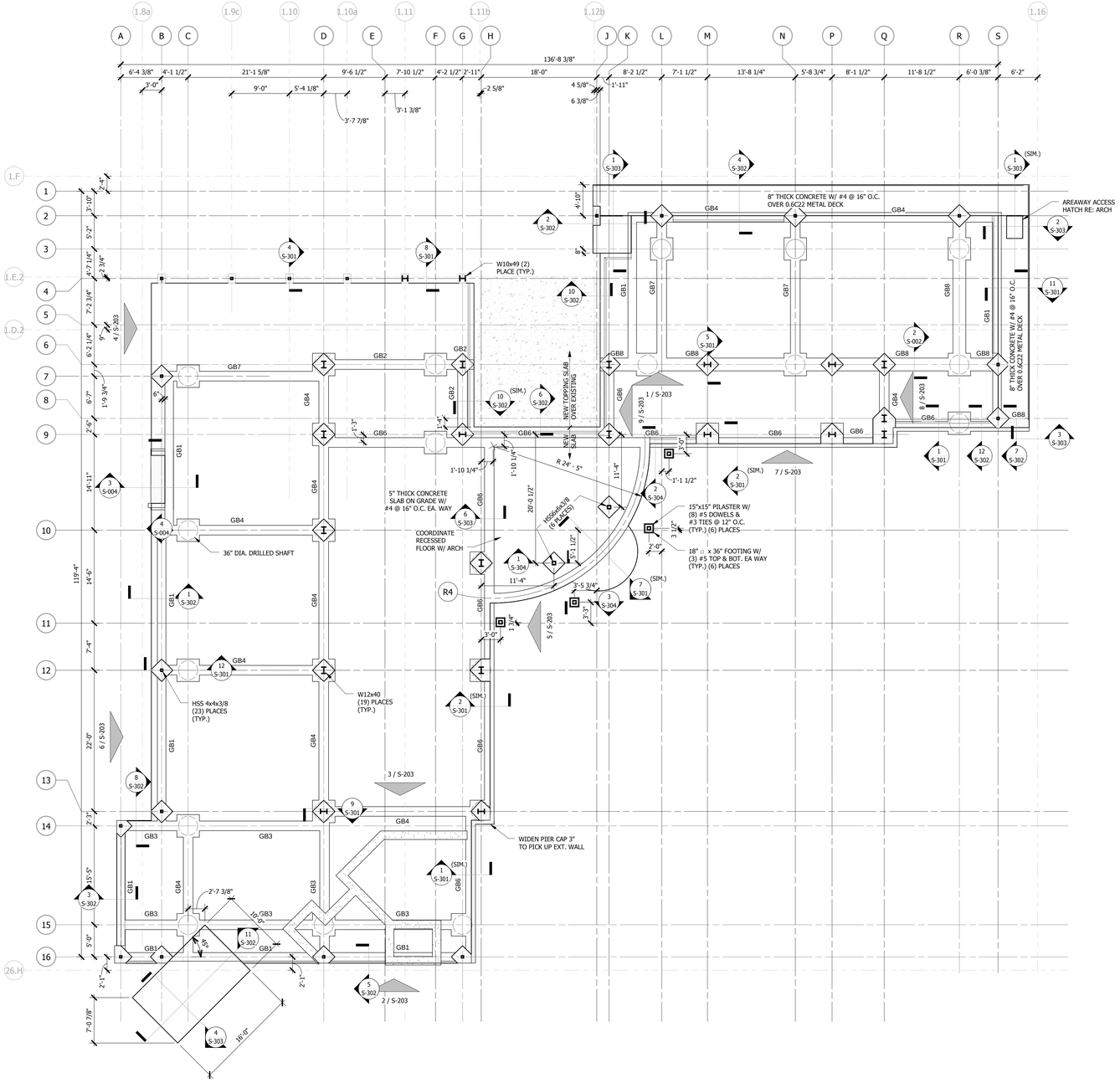

1 FOUNDATION PLAN (DEDUCT 7)
1/8" = 1'-0"

GRADE BEAM SCHEDULE

TYPE MARK	TOP REINFORCING	BOTTOM REINFORCING	TIE REINFORCING	WIDTH	HEIGHT
GB1	(3) #6 BARS	(3) #6 BARS	#3 TIES @ 10" O.C.	1' - 4"	2' - 0"
GB2	(3) # 8 BARS	(3) #8 BARS	#3 TIES @ 6" O.C.	1' - 6"	2' - 0"
GB3	(3) # 10 BARS	(3) #8 BARS	#3 TIES @ 8" O.C.	1' - 6"	2' - 0"
GB4	(3) # 8 BARS	(3) #8 BARS	#3 TIES @ 10" O.C.	1' - 6"	2' - 0"
GB6	(3) # 8 BARS	(3) #8 BARS	#3 TIES @ 10" O.C.	1' - 6"	3' - 0"
GB7	(3) # 10 BARS	(3) #8 BARS	#3 TIES @ 10" O.C.	1' - 6"	3' - 0"
GB8	(4) # 10 BARS	(4) #8 BARS	#3 TIES @ 8" O.C.	2' - 0"	3' - 0"

BEAM SCHEDULE

CALLOUT	MEMBER SIZE
B2	W14X22
B3	W16X26
B5	W21X50
B7	HSS8X4X3/8
B13	HSS10X6X3/8
B14	W14X34

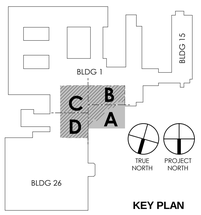

KEY PLAN

FOUNDATION PLAN NOTES:

1. TOP OF CONCRETE SLAB ELEVATION AT 1ST FLOOR = 946'-0".
2. TOP OF FOOTING ELEVATION AT 1ST FLOOR = 945'-0" UNLESS NOTED OTHERWISE.
3. 5" SLAB ON GRADE REINFORCED WITH #4@16" O.C. AND 15 MIL VAPOR BARRIER OVER 6" ROCK.
4. REFERENCE GEOTECHNICAL AND SPECIFACTIONS FOR ALL UNDERSLAB REQUIREMENTS.
5. #4x5'-0" LONG AT ALL RE-ENTRANT CORNERS.
6. DURING INSTALLATION OF ALL POST CONSTRUCTION ANCHORS, CARE MUST BE TAKEN TO AVIOD ALL REINFORCING.
7. ISOLATION JOINTS PER DETAIL 3/S-002.
8. SLAB CONTROL AND CONSTRUCTION JOINTS PER DETAIL 1/S-002. CONSTRUCTION JOINTS MAY BE SUBSTITUTED FOR CONTROL JOINTS AT THE CONTRACTOR'S DISCRETION.
9. CONTRACTOR TO COORDINATE ALL FLOOR AND SLAB PENETRATIONS AND RECESSES WITH ALL OTHER DISCIPLINES. COORDINATE WITH MEP FOR HOUSEKEEPING PADS.
10. REFER TO ARCHITECTURAL FOR ALL DIMENSIONS NOT SHOWN ON THESE DRAWINGS.
11. REFER TO ARCHITECTURAL FOR SLAB SLOPES TO DRAINS.

No.	Description	Date

ENGINEERS & CONSULTANTS:

CIVIL
SK Design Group, Inc.
4600 College Blvd, Suite 100
Overland Park, KS 66211
913.451.1818

STRUCTURAL
Leigh & O'Kane
9201 Ward Parkway, Suite 301
Kansas City, MO 64114
816.444.3144

MECHANICAL, ELECTRICAL, PLUMBING, TELECOM, SECURITY
InSite Group, Inc.
1950 NW Copper Oaks Cr
Blue Springs, MO 64015
816.228.3377

FIRE PROTECTION & LIFE SAFETY
FSC, Inc.
9225 Indian Creek Pkwy, Ste 300
Overland Park, KS 66210
913.722.3473

ASBESTOS ABATEMENT
Terracon
13910 W 96th Terrace
Lenexa, KS 66215
913.492.7777

COMMISSIONING
Pro Balance, Inc.
5411 West 40 Highway
Blue Springs, MO 64015
816.228.7800

STATE OF MISSOURI
WAYNE NEEL HESS
NUMBER PE-2010019551
04/13/16
PROFESSIONAL ENGINEER

ARCHITECT:
WELLNER architects inc.
Wellner Architects, Inc.
802 Broadway Blvd, 4th Floor
Kansas City, MO 64105
816.221.0017

Drawing Title: FOUNDATION PLAN, BLDG 1, DEDUCT 7

Approved: Kathleen R. Fogarty, Medical Center Director

Project Title: CONSTRUCT OEF/OIF AND SPECIALTY CARE ADDITION

Location: 4801 LINWOOD BLVD, KANSAS CITY, MO 64128

Date: 30 March 2016 | Checked: WNH | Drawn: CMS

Project Number: 589-CA3-472

Building Number: 1

Drawing Number: S-111.B

Dwg. 34 of 188

Office of Construction and Facilities Management

Department of Veterans Affairs

CONSTRUCTION DOCUMENTS 100% SUBMISSION

VA FORM 08-6231

4/13/2016 12:35:10 PM

DEDUCT SHEET REFERENCE INFORMATION:
REFER TO S-121A FOR DEDUCT 4,5 & 6 CHANGES.
REFER TO S-121B FOR DEDUCT 7 CHANGES.

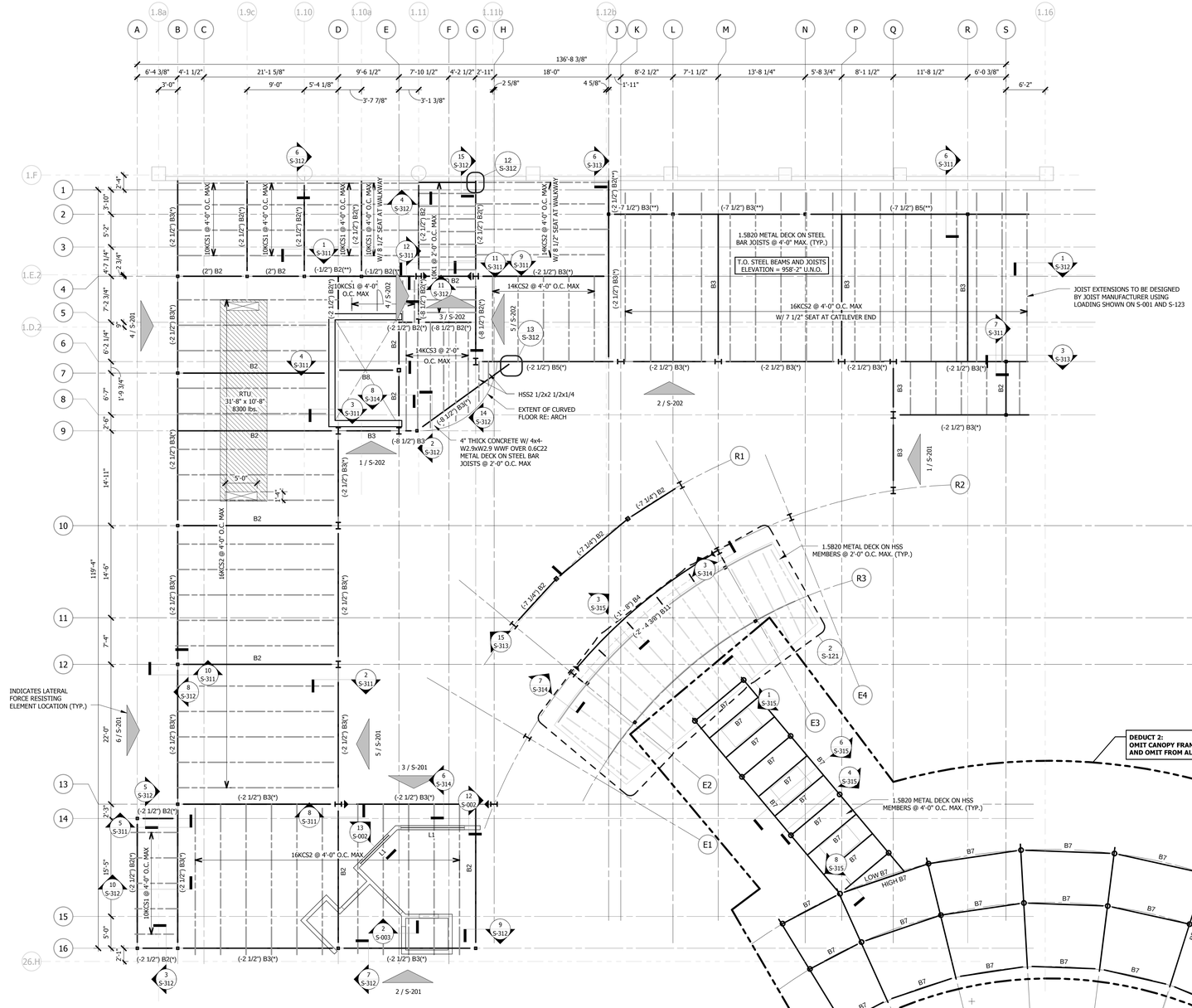

1 SECOND FLOOR FRAMING PLAN (BASE BID & DEDUCT 2)
1/8" = 1'-0"

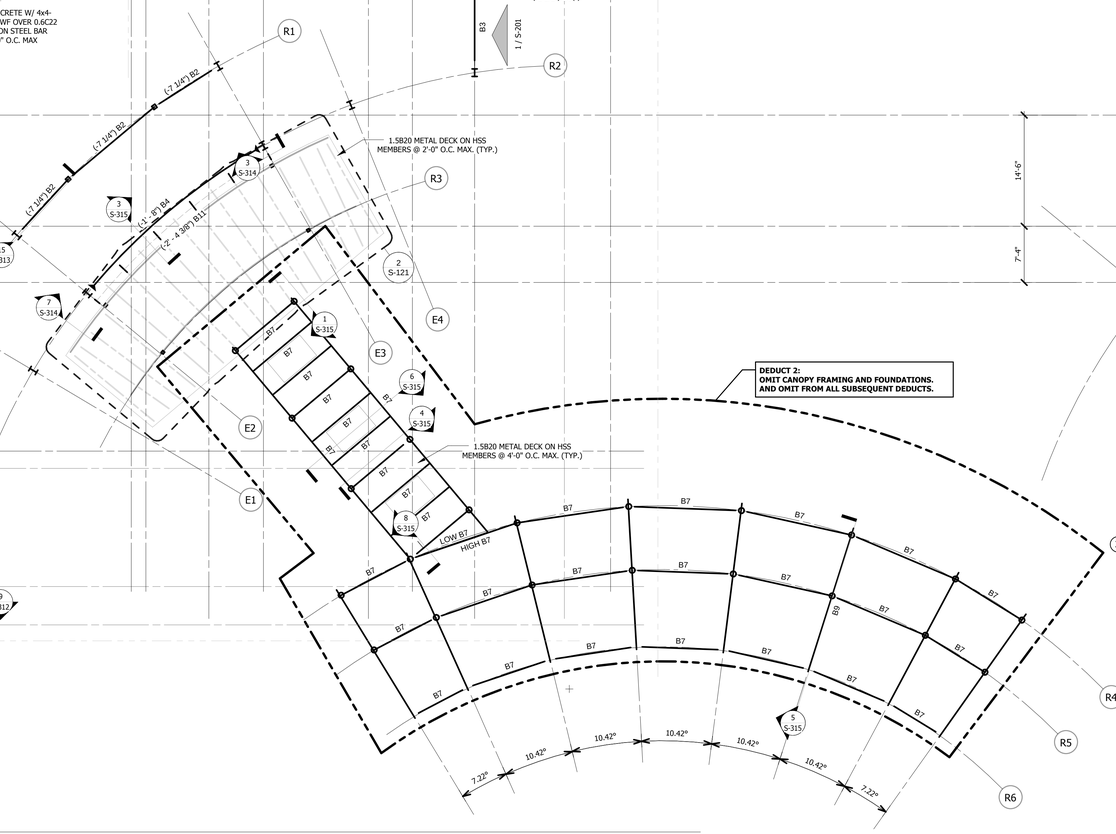

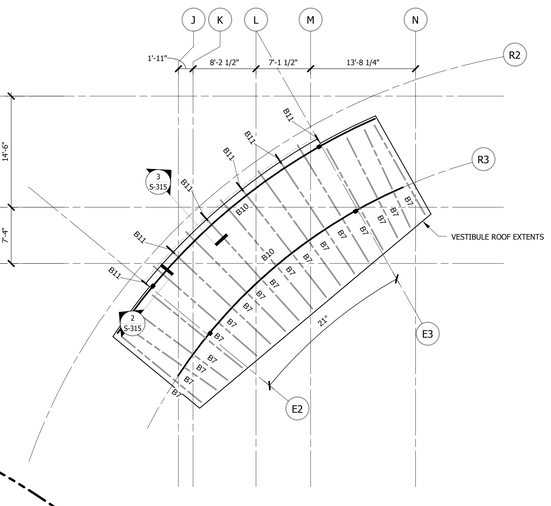

2 VESTIBULE FRAMING PLAN (BASE BID)
1/8" = 1'-0"

ROOF FRAMING PLAN NOTES:

1. ROOF DECK TO BE 1 1/2" 20 GA. TYPE B. MIN. 3 SPAN CONDITION TYP. ALL LOCATIONS. FASTEN DIAPHRAGM USING 36/4 PATTERN W/ #12 TEK SCREWS AND (3) #10 TEK AT SIDELAP.
2. OPENINGS IN THE ROOF DECK AND WALLS TO BE COORDINATED WITH ALL OTHER DISCIPLINES.
3. REFER TO ARCHITECTURAL FOR ALL DIMENSIONS NOT SHOWN ON THESE PLANS.
4. NON-LOAD BEARING STUD WALLS SHALL HAVE 1" GAP BETWEEN TOP OF STUD AND BOTTOM OF ROOF FRAMING.
5. B7 (*) INDICATES MEMBER TO HAVE HSS 2 1/2 x 2 1/2 x 1/8 CONT. BETWEEN JOISTS FOR DECK SUPPORT.
6. B7 (**) INDICATES MEMBER TO HAVE HSS 2 1/2 x 4 x 1/8 CONT. BETWEEN JOISTS FOR DECK SUPPORT.
7. REFER TO ELEVATOR MANUFACTURER FOR ELEVATOR HSS BEAM QUANTITY AND LOCATION.

FLOOR FRAMING PLAN NOTES:

1. TOP OF ELEVATED SLAB = 958'-0"
2. 4" TOTAL SLAB THICKNESS W/ 4x4-W2.9xW2.9 WWF OVER 0.6CZ22 METAL DECK ON STEEL BAR JOISTS @ 2'-0" O.C. MAX
3. ALL OPENINGS FOR MECHANICAL SHAFTS NEED TO BE COORDINATED WITH ARCHITECTURAL AND MECHANICAL DRAWINGS.
4. CONTRACTOR TO COORDINATE WITH ARCHITECTURAL AND MECHANICAL DRAWINGS FOR ANY ADDITIONAL MISC. STEEL.
5. REFER TO ARCHITECTURAL DRAWINGS FOR ALL DIMENSIONS NOT SHOWN ON DRAWINGS.
6. REFER TO 14/S-002 FOR STEEL LINTEL AT MASONRY OPENINGS LARGER THAN 4'-0" MAX.
7. REFER TO ELEVATOR MANUFACTURER FOR ELEVATOR HSS BEAM QUANTITY AND LOCATION.

BEAM SCHEDULE

CALLOUT	MEMBER SIZE
B1	W8X31
B2	W14X22
B3	W16X26
B4	W18X35
B5	W21X50
B6	W24X62
B7	HSS8X4X3/8
B8	HSS8X6X3/8
B9	HSS12X4X3/8
B10	HSS12X6X3/8
B11	C8X11.5

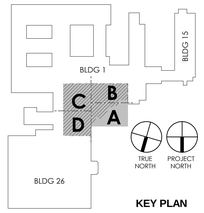

KEY PLAN

No.	Description	Date

ENGINEERS & CONSULTANTS:

CIVIL
SK Design Group, Inc.
4600 College Blvd, Suite 100
Overland Park, KS 66211
913.451.1818

STRUCTURAL
Leigh & O'Kane
9201 Ward Parkway, Suite 301
Kansas City, MO 64114
816.444.3144

MECHANICAL, ELECTRICAL, PLUMBING, TELECOM, SECURITY
InSite Group, Inc.
1950 NW Copper Oaks Cr
Blue Springs, MO 64015
816.228.3377

FIRE PROTECTION & LIFE SAFETY
FSC, Inc.
9225 Indian Creek Pkwy, Ste 300
Overland Park, KS 66210
913.722.3473

ASBESTOS ABATEMENT
Terracon
13910 W 96th Terrace
Lenexa, KS 66215
913.492.7777

COMMISSIONING
Pro Balance, Inc.
5411 West 40 Highway
Blue Springs, MO 64015
816.228.7800

STATE OF MISSOURI
WAYNE NEEL HESS
NUMBER PE-2010019551
04/13/16
PROFESSIONAL ENGINEER

ARCHITECT:
WELLNER architects inc.
Wellner Architects, Inc.
802 Broadway Blvd, 4th Floor
Kansas City, MO 64105
816.221.0017

Drawing Title: 2ND FLOOR AND LOW ROOF FRAMING PLAN, BLDG 1, BASE BID AND DEDUCT 2

Approved: Kathleen R. Fogarty, Medical Center Director

Project Title: CONSTRUCT OEF/OIF AND SPECIALTY CARE ADDITION

Location: 4801 LINWOOD BLVD, KANSAS CITY, MO 64128

Date: 30 March 2016 | Checked: WNH | Drawn: CMS

Project Number: 589-CA3-472
Building Number: 1
Drawing Number: S-121
Dwg. 35 of 188

Office of Construction and Facilities Management
Department of Veterans Affairs

4/13/2016 12:31:45 PM

VA FORM 08-6231

SOLICITATION FOR CONSTRUCTION PROPOSAL DOCUMENTS

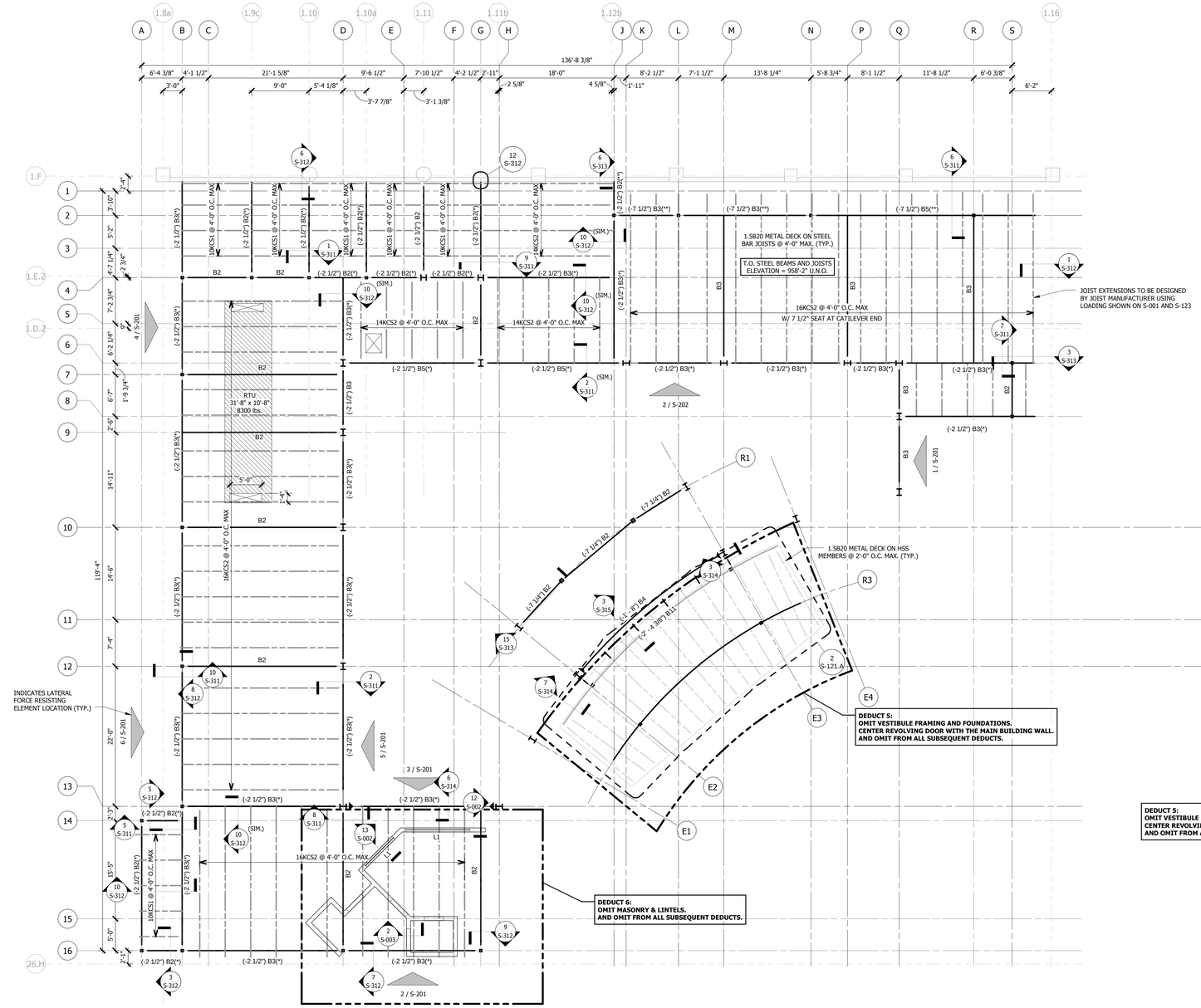

1 SECOND FLOOR FRAMING PLAN (DEDUCTS 4,5 & 6)
1/8" = 1'-0"

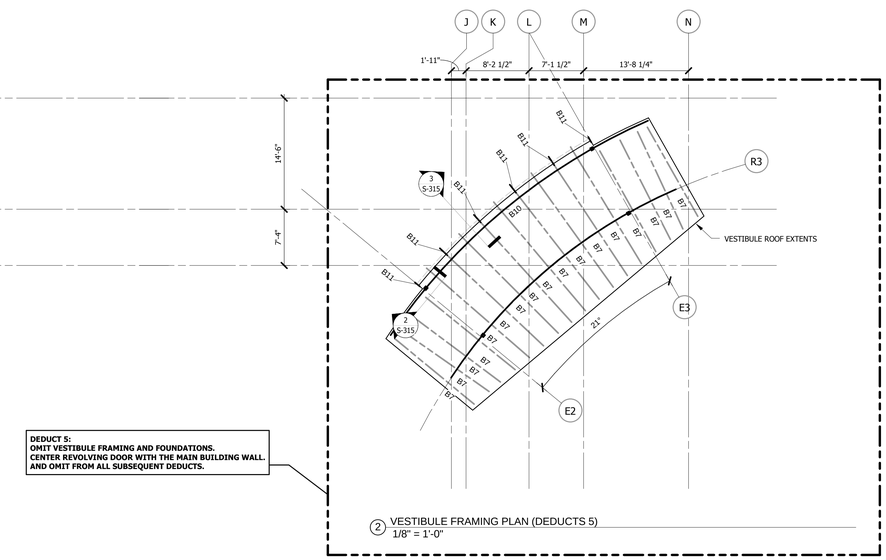

2 VESTIBULE FRAMING PLAN (DEDUCTS 5)
1/8" = 1'-0"

BEAM SCHEDULE

CALLOUT	MEMBER SIZE
B2	W14X22
B3	W16X26
B4	W18X35
B5	W21X50
B6	W24X62
B7	HSS8X4X3/8
B10	HSS12X6X3/8
B11	C8X11.5
B12	W24X55

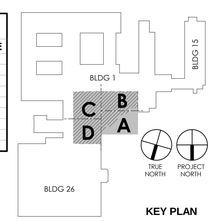

KEY PLAN

ROOF FRAMING PLAN NOTES:

1. ROOF DECK TO BE 1 1/2" 20 GA. TYPE B. MIN. 3 SPAN CONDITION TYP. ALL LOCATIONS. FASTEN DIAPHRAGM USING 36/4 PATTERN W/ #12 TEK SCREWS AND (3) #10 TEK AT SIDELAP.
2. OPENINGS IN THE ROOF DECK AND WALLS TO BE COORDINATED WITH ALL OTHER DISCIPLINES.
3. REFER TO ARCHITECTURAL FOR ALL DIMENSIONS NOT SHOWN ON THESE PLANS.
4. NON-LOAD BEARING STUD WALLS SHALL HAVE 1" GAP BETWEEN TOP OF STUD AND BOTTOM OF ROOF FRAMING.
5. B7 (*) INDICATES MEMBER TO HAVE HSS 2 1/2 x 2 1/2 x 1/8 CONT. BETWEEN JOISTS FOR DECK SUPPORT.
6. B7 (**) INDICATES MEMBER TO HAVE HSS 2 1/2 x 4 x 1/8 CONT. BETWEEN JOISTS FOR DECK SUPPORT.
7. REFER TO ELEVATOR MANUFACTURER FOR ELEVATOR HSS BEAM QUANTITY AND LOCATION.

No.	Description	Date

ENGINEERS & CONSULTANTS:

CIVIL — SK Design Group, Inc. — 4600 College Blvd, Suite 100, Overland Park, KS 66211 — 913.451.1818

STRUCTURAL — Leigh & O'Kane — 9201 Ward Parkway, Suite 301, Kansas City, MO 64114 — 816.444.3144

MECHANICAL, ELECTRICAL, PLUMBING, TELECOM, SECURITY — InSite Group, Inc. — 1950 NW Copper Oaks Cr, Blue Springs, MO 64015 — 816.228.3377

FIRE PROTECTION & LIFE SAFETY — FSC, Inc. — 9225 Indian Creek Pkwy, Ste 300, Overland Park, KS 66210 — 913.722.3473

ASBESTOS ABATEMENT — Terracon — 13910 W 96th Terrace, Lenexa, KS 66215 — 913.492.7777

COMMISSIONING — pro balance — 5411 West 40 Highway, Blue Springs, MO 64015 — 816.228.7800

STATE OF MISSOURI — WAYNE NEEL HESS — NUMBER PE-2010019551 — PROFESSIONAL ENGINEER — 04/13/16

ARCHITECT:

WELLNER architects inc.
Wellner Architects, Inc.
802 Broadway Blvd, 4th Floor
Kansas City, MO 64105
816.221.0017

Drawing Title: LOW ROOF FRAMING PLAN, BLDG 1, DEDUCTS 4,5,6

Approved: Kathleen R. Fogarty, Medical Center Director

Project Title: CONSTRUCT OEF/OIF AND SPECIALTY CARE ADDITION

Location: 4801 LINWOOD BLVD, KANSAS CITY, MO 64128

Date: 30 March 2016 | Checked: WNH | Drawn: CMS

Project Number: 589-CA3-472

Building Number: 1

Drawing Number: S-121.A

Dwg. 36 of 188

Office of Construction and Facilities Management

Department of Veterans Affairs

VA FORM 08-6231

CONSTRUCTION DOCUMENTS 100% SUBMISSION

4/13/2016 12:34:20 PM

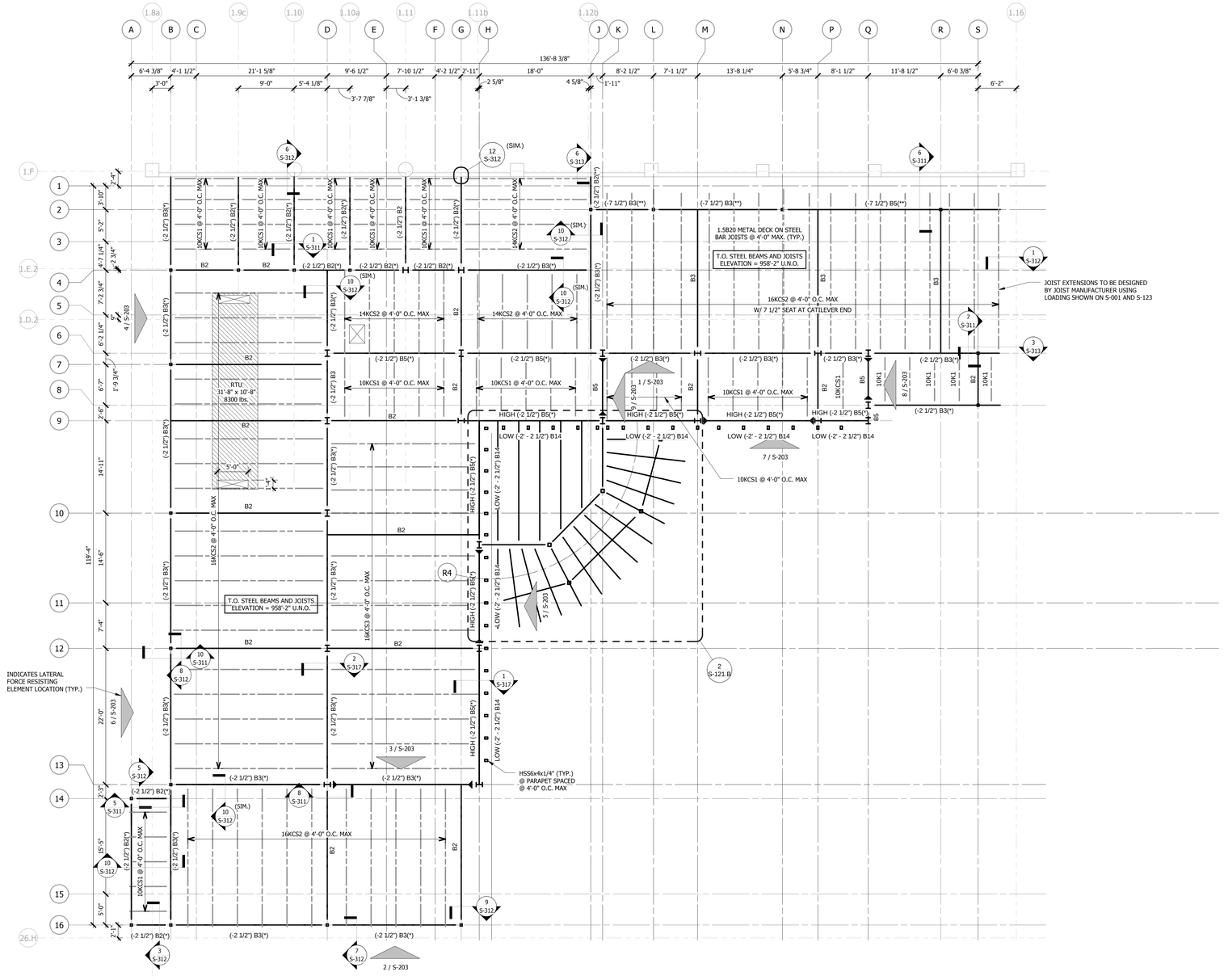

1 SECOND FLOOR FRAMING PLAN (DEDUCT 7)
1/8" = 1'-0"

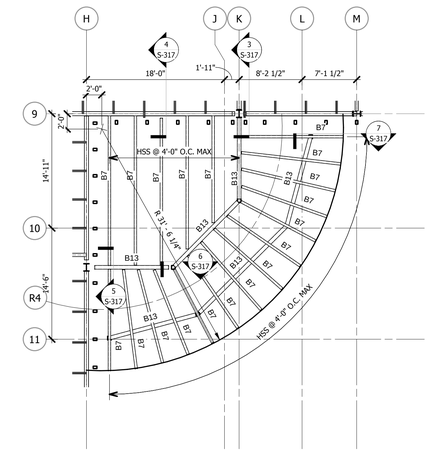

2 VESTIBULE FRAMING PLAN (DEDUCT 7)
1/8" = 1'-0"

BEAM SCHEDULE

CALLOUT	MEMBER SIZE
B2	W14X22
B3	W16X26
B5	W21X50
B7	HSS8X4X3/8
B13	HSS10X6X3/8
B14	W14X34

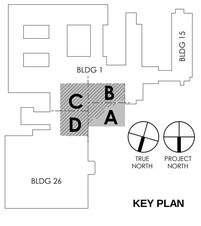

KEY PLAN

ROOF FRAMING PLAN NOTES:

1. ROOF DECK TO BE 1 1/2" 20 GA. TYPE B. MIN. 3 SPAN CONDITION TYP. ALL LOCATIONS. FASTEN DIAPHRAGM USING 36/4 PATTERN W/ #12 TEK SCREWS AND (3) #10 TEK AT SIDELAP.
2. OPENINGS IN THE ROOF DECK AND WALLS TO BE COORDINATED WITH ALL OTHER DISCIPLINES.
3. REFER TO ARCHITECTURAL FOR ALL DIMENSIONS NOT SHOWN ON THESE PLANS.
4. NON-LOAD BEARING STUD WALLS SHALL HAVE 1" GAP BETWEEN TOP OF STUD AND BOTTOM OF ROOF FRAMING.
5. B7 (*) INDICATES MEMBER TO HAVE HSS 2 1/2 x 2 1/2 x 1/8 CONT. BETWEEN JOISTS FOR DECK SUPPORT.
6. B7 (**) INDICATES MEMBER TO HAVE HSS 2 1/2 x 4 x 1/8 CONT. BETWEEN JOISTS FOR DECK SUPPORT.

No.	Description	Date

ENGINEERS & CONSULTANTS:

CIVIL — SK Design Group, Inc. (Since 1989)
SK Design Group, Inc.
4600 College Blvd, Suite 100
Overland Park, KS 66211
913.451.1818

STRUCTURAL — Leigh & O'Kane
Leigh & O'Kane
9201 Ward Parkway, Suite 301
Kansas City, MO 64114
816.444.3144

MECHANICAL, ELECTRICAL, PLUMBING, TELECOM, SECURITY — InSite Group, Inc. (Consulting Engineers)
InSite Group, Inc.
1950 NW Copper Oaks Cr
Blue Springs, MO 64015
816.228.3377

FIRE PROTECTION & LIFE SAFETY — FSC, Inc. (Consulting Engineers)
FSC, Inc.
9225 Indian Creek Pkwy, Ste 300
Overland Park, KS 66210
913.722.3473

ASBESTOS ABATEMENT — Terracon (Consulting Engineers and Scientists)
Terracon
13910 W 96th Terrace
Lenexa, KS 66215
913.492.7777

COMMISSIONING — pb pro balance
Pro Balance, Inc.
5411 West 40 Highway
Blue Springs, MO 64015
816.228.7800

STATE OF MISSOURI — WAYNE NEEL HESS — NUMBER PE-2010019551 — PROFESSIONAL ENGINEER — 04/13/16

ARCHITECT:
WELLNER architects inc.
Wellner Architects, Inc.
802 Broadway Blvd, 4th Floor
Kansas City, MO 64105
816.221.0017

Drawing Title: ROOF FRAMING PLAN, BLDG 1, DEDUCT 7

Approved: Kathleen R. Fogarty, Medical Center Director

Project Title: CONSTRUCT OEF/OIF AND SPECIALTY CARE ADDITION

Location: 4801 LINWOOD BLVD, KANSAS CITY, MO 64128

Date: 30 March 2016 | Checked: WNH | Drawn: CMS

Project Number: 589-CA3-472

Building Number: 1

Drawing Number: S-121.B

Dwg. 37 of 188

Office of Construction and Facilities Management

Department of Veterans Affairs

VA FORM 08-6231

CONSTRUCTION DOCUMENTS 100% SUBMISSION

4/13/2016 12:35:11 PM

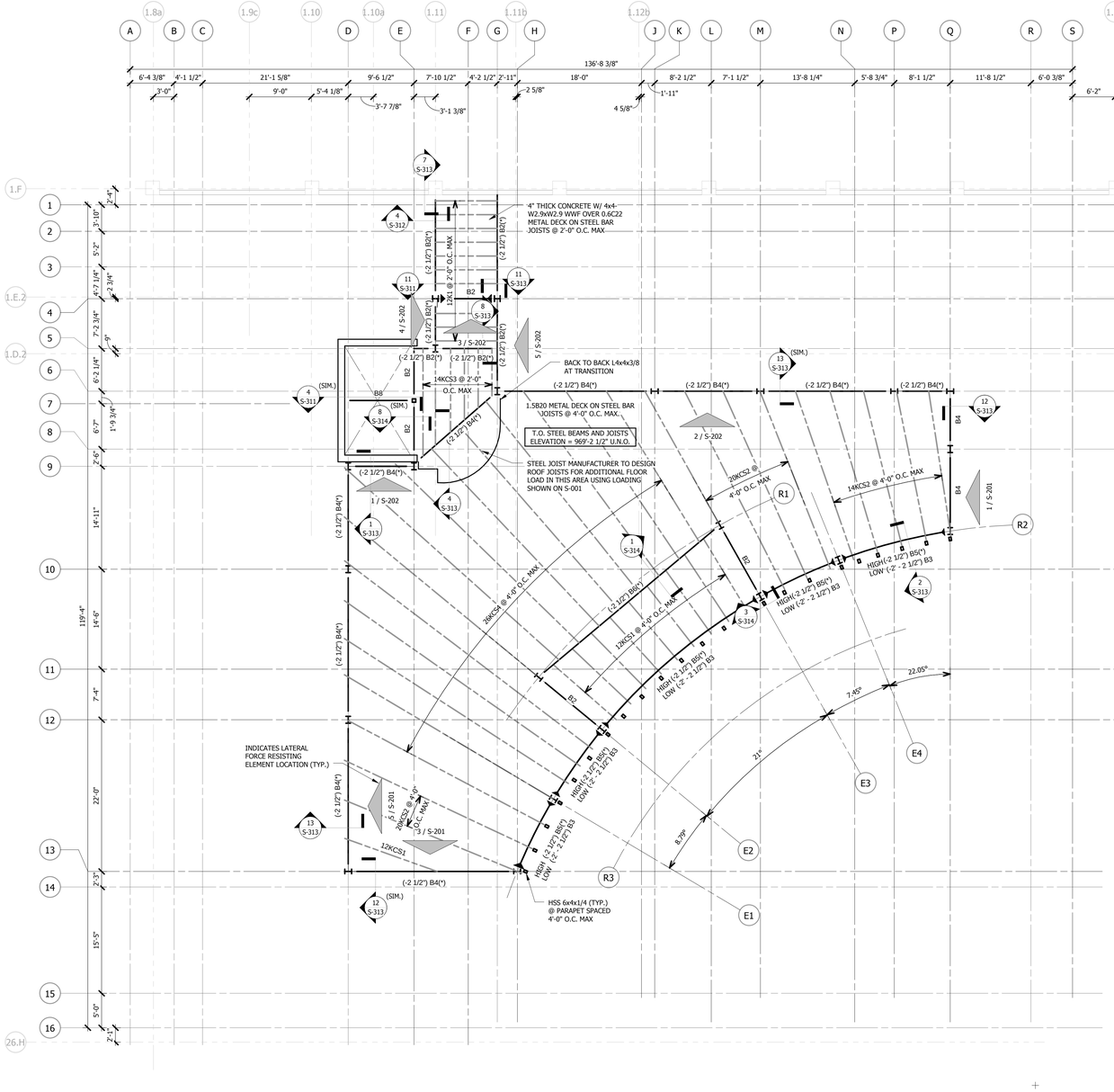

1 THIRD FLOOR FRAMING PLAN (BASE BID) (NOT USED FOR DEDUCT 7)
1/8" = 1'-0"

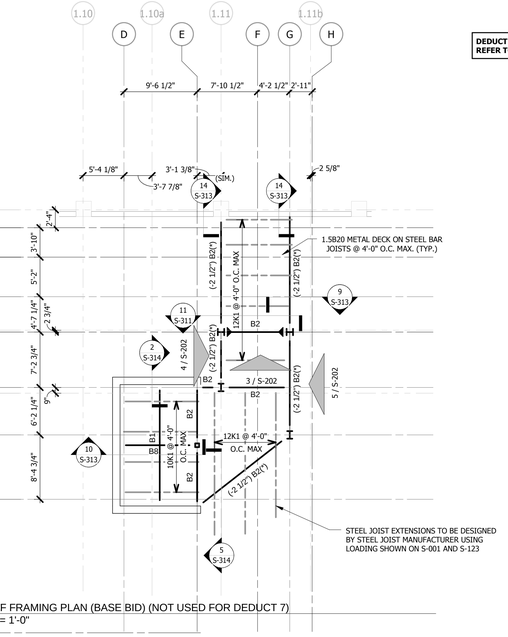

2 ROOF FRAMING PLAN (BASE BID) (NOT USED FOR DEDUCT 7)
1/8" = 1'-0"

DEDUCT SHEET REFERENCE INFORMATION:
REFER TO S-122A FOR DEDUCT 4,5 & 6 CHANGES.

BEAM SCHEDULE

CALLOUT	MEMBER SIZE
B1	W8X31
B2	W14X22
B3	W16X26
B4	W18X35
B5	W21X50
B6	W24X62
B7	HSS8X4X3/8
B8	HSS8X6X3/8
B9	HSS12X4X3/8
B10	HSS12X6X3/8
B11	C8X11.5

ROOF FRAMING PLAN NOTES:

1. ROOF DECK TO BE 1 1/2" 20 GA. TYPE B. MIN. 3 SPAN CONDITION TYP. ALL LOCATIONS. FASTEN DIAPHRAGM USING 36/4 PATTERN W/ #12 TEK SCREWS AND (3) #10 TEK AT SIDELAP.
2. OPENINGS IN THE ROOF DECK AND WALLS TO BE COORDINATED WITH ALL OTHER DISCIPLINES.
3. REFER TO ARCHITECTURAL FOR ALL DIMENSIONS NOT SHOWN ON THESE PLANS.
4. NON-LOAD BEARING STUD WALLS SHALL HAVE 1" GAP BETWEEN TOP OF STUD AND BOTTOM OF ROOF FRAMING.
5. B? (*) INDICATES MEMBER TO HAVE HSS 2 1/2 x 2 1/2 x 1/8 CONT. BETWEEN JOISTS FOR DECK SUPPORT.
6. B? (**) INDICATES MEMBER TO HAVE HSS 2 1/2 x 4 x 1/8 CONT. BETWEEN JOISTS FOR DECK SUPPORT.
7. REFER TO ELEVATOR MANUFACTURER FOR ELEVATOR HSS BEAM QUANTITY AND LOCATION.

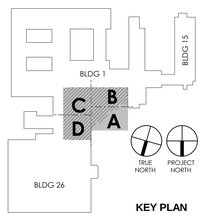

KEY PLAN

No.	Description	Date

ENGINEERS & CONSULTANTS:

CIVIL
SK Design Group, Inc.
4600 College Blvd. Suite 100
Overland Park, KS 66211
913.451.1818

STRUCTURAL
Leigh & O'Kane
9201 Ward Parkway, Suite 301
Kansas City, MO 64114
816.444.3144

MECHANICAL, ELECTRICAL, PLUMBING, TELECOM, SECURITY
InSite Group, Inc.
1950 NW Copper Oaks Cr
Blue Springs, MO 64015
816.228.3377

FIRE PROTECTION & LIFE SAFETY
FSC, Inc.
9225 Indian Creek Pkwy, Ste 300
Overland Park, KS 66210
913.722.3473

ASBESTOS ABATEMENT
Terracon
13910 W 96th Terrace
Lenexa, KS 66215
913.492.7777

COMMISSIONING
Pro Balance, Inc.
5411 West 40 Highway
Blue Springs, MO 64015
816.228.7800

STATE OF MISSOURI — WAYNE NEEL HESS — NUMBER PE-2010019551 — PROFESSIONAL ENGINEER — 04/13/16

ARCHITECT:
Wellner Architects, Inc.
802 Broadway Blvd, 4th Floor
Kansas City, MO 64105
816.221.0017

Drawing Title: 3RD FLOOR AND LOBBY ROOF FRAMING PLAN, BLDG 1, BASE BID AND DEDUCT 2

Approved: Kathleen R. Fogarty, Medical Center Director

Project Title: CONSTRUCT OEF/OIF AND SPECIALTY CARE ADDITION

Location: 4801 LINWOOD BLVD, KANSAS CITY, MO 64128

Date: 30 March 2016 | Checked: WNH | Drawn: CMS

Project Number: 589-CA3-472
Building Number: 1
Drawing Number: S-122
Dwg. 38 of 188

Office of Construction and Facilities Management
Department of Veterans Affairs

4/13/2016 12:31:46 PM

VA FORM 08-6231

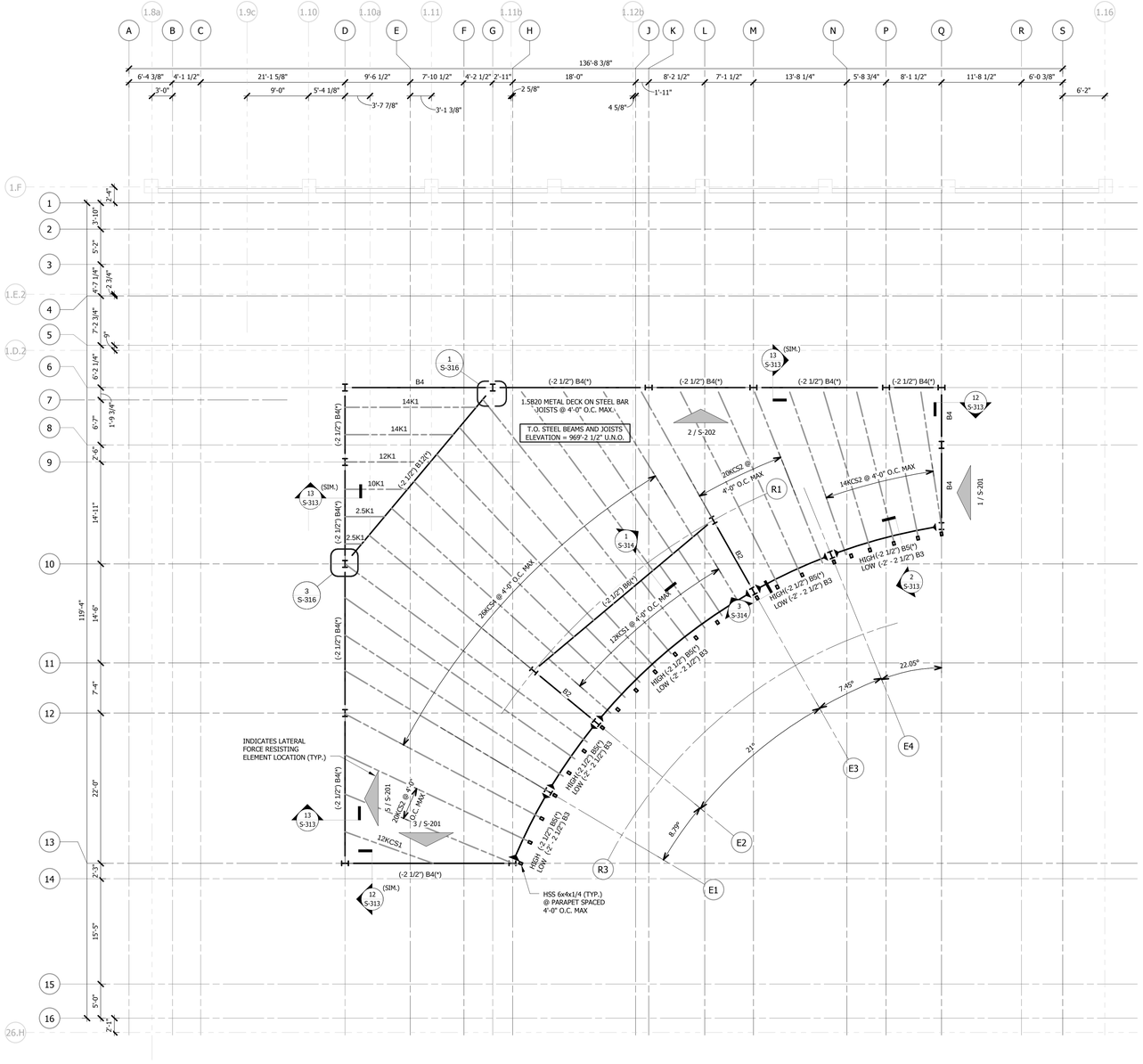

1 THIRD FLOOR FRAMING PLAN (DEDUCTS 4,5 & 6) (NOT USED FOR DEDUCT 7)
1/8" = 1'-0"

BEAM SCHEDULE

CALLOUT	MEMBER SIZE
B2	W14X22
B3	W16X26
B4	W18X35
B5	W21X50
B6	W24X62
B7	HSS8X4X3/8
B10	HSS12X6X3/8
B11	C8X11.5
B12	W24X55

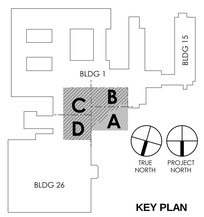

KEY PLAN

ROOF FRAMING PLAN NOTES:

1. ROOF DECK TO BE 1 1/2" 20 GA. TYPE B, MIN. 3 SPAN CONDITION TYP. ALL LOCATIONS. FASTEN DIAPHRAGM USING 36/4 PATTERN W/ #12 TEK SCREWS AND (3) #10 TEK AT SIDELAP.
2. OPENINGS IN THE ROOF DECK AND WALLS TO BE COORDINATED WITH ALL OTHER DISCIPLINES.
3. REFER TO ARCHITECTURAL FOR ALL DIMENSIONS NOT SHOWN ON THESE PLANS.
4. NON-LOAD BEARING STUD WALLS SHALL HAVE 1" GAP BETWEEN TOP OF STUD AND BOTTOM OF ROOF FRAMING.
5. B? (*) INDICATES MEMBER TO HAVE HSS 2 1/2 x 2 1/2 x 1/8 CONT. BETWEEN JOISTS FOR DECK SUPPORT.
6. B? (**) INDICATES MEMBER TO HAVE HSS 2 1/2 x 4 x 1/8 CONT. BETWEEN JOISTS FOR DECK SUPPORT.
7. REFER TO ELEVATOR MANUFACTURER FOR ELEVATOR HSS BEAM QUANTITY AND LOCATION.

No.	Description	Date

ENGINEERS & CONSULTANTS:

CIVIL	STRUCTURAL	MECHANICAL, ELECTRICAL, PLUMBING, TELECOM, SECURITY	FIRE PROTECTION & LIFE SAFETY	ASBESTOS ABATEMENT	COMMISSIONING
SK Design Group, Inc.	Leigh & O'Kane	InSite Group, Inc.	FSC, Inc.	Terracon	Pro Balance, Inc.
4600 College Blvd. Suite 100 Overland Park, KS 66211	9201 Ward Parkway, Suite 301 Kansas City, MO 64114	1950 NW Copper Oaks Cr Blue Springs, MO 64015	9225 Indian Creek Pkwy, Ste 300 Overland Park, KS 66210	13910 W 96th Terrace Lenexa, KS 66215	5411 West 40 Highway Blue Springs, MO 64015
913.451.1818	816.444.3144	816.228.3377	913.722.3473	913.492.7777	816.228.7800

STATE OF MISSOURI WAYNE NEEL HESS NUMBER PE-2010019551 04/13/16 PROFESSIONAL ENGINEER

ARCHITECT:

WELLNER architects inc.

Wellner Architects, Inc.
802 Broadway Blvd, 4th Floor
Kansas City, MO 64105
816.221.0017

Drawing Title: LOBBY ROOF FRAMING PLAN, BLDG 1, DEDUCTS 4,5,6

Approved: Kathleen R. Fogarty, Medical Center Director

Project Title: CONSTRUCT OEF/OIF AND SPECIALTY CARE ADDITION

Location: 4801 LINWOOD BLVD, KANSAS CITY, MO 64128

Date: 30 March 2016 | Checked: WNH | Drawn: CMS

Project Number: 589-CA3-472

Building Number: 1

Drawing Number: S-122.A

Dwg. 39 of 188

Office of Construction and Facilities Management

Department of Veterans Affairs

4/13/2016 12:34:21 PM

VA FORM 08-6231

CONSTRUCTION DOCUMENTS 100% SUBMISSION

DEDUCT SHEET REFERENCE INFORMATION:
REFER TO S-123A FOR DEDUCT 4 CHANGES.
REFER TO S-123B FOR DEDUCT 7 CHANGES.

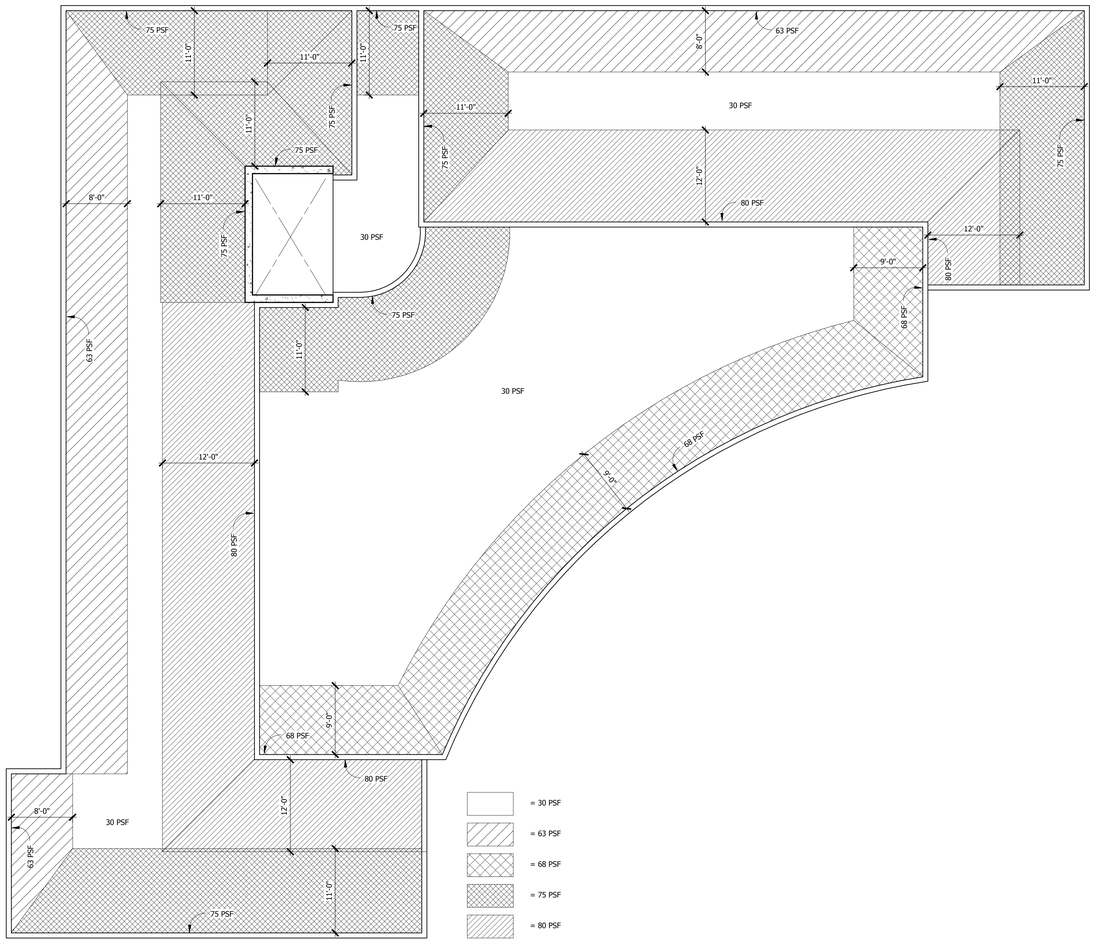

1 SNOW LOADING DIAGRAM (BASE BID)
1/8" = 1'-0"

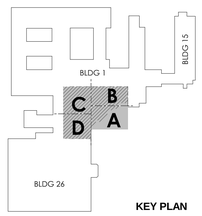

KEY PLAN

No.	Description	Date

ENGINEERS & CONSULTANTS:

CIVIL
SK Design Group, Inc.
4600 College Blvd, Suite 100
Overland Park, KS 66211
913.451.1818

STRUCTURAL
Leigh & O'Kane
9201 Ward Parkway, Suite 301
Kansas City, MO 64114
816.444.3144

MECHANICAL, ELECTRICAL, PLUMBING, TELECOM, SECURITY
InSite Group, Inc.
1950 NW Copper Oaks Cr
Blue Springs, MO 64015
816.228.3377

FIRE PROTECTION & LIFE SAFETY
FSC, Inc.
9225 Indian Creek Pkwy, Ste 300
Overland Park, KS 66210
913.722.3473

ASBESTOS ABATEMENT
Terracon
13910 W 96th Terrace
Lenexa, KS 66215
913.492.7777

COMMISSIONING
Pro Balance, Inc.
5411 West 40 Highway
Blue Springs, MO 64015
816.228.7800

STATE OF MISSOURI
WAYNE NEEL HESS
NUMBER PE-2010019551
04/13/16
PROFESSIONAL ENGINEER

ARCHITECT:

WELLNER architects inc.
Wellner Architects, Inc.
802 Broadway Blvd, 4th Floor
Kansas City, MO 64105
816.221.0017

Drawing Title
LOWER AND UPPER AND DECK JOIST LOADING DIAGRAM, BLDG 1, BASE BID

Approved: Kathleen R. Fogarty, Medical Center Director

Project Title
CONSTRUCT OEF/OIF AND SPECIALTY CARE ADDITION

Location
4801 LINWOOD BLVD, KANSAS CITY, MO 64128

Date	Checked	Drawn
30 March 2016	WNH	CMS

Project Number: 589-CA3-472
Building Number: 1
Drawing Number: S-123
Dwg. 40 of 188

Office of Construction and Facilities Management

Department of Veterans Affairs

4/13/2016 12:31:47 PM

VA FORM 08-6231

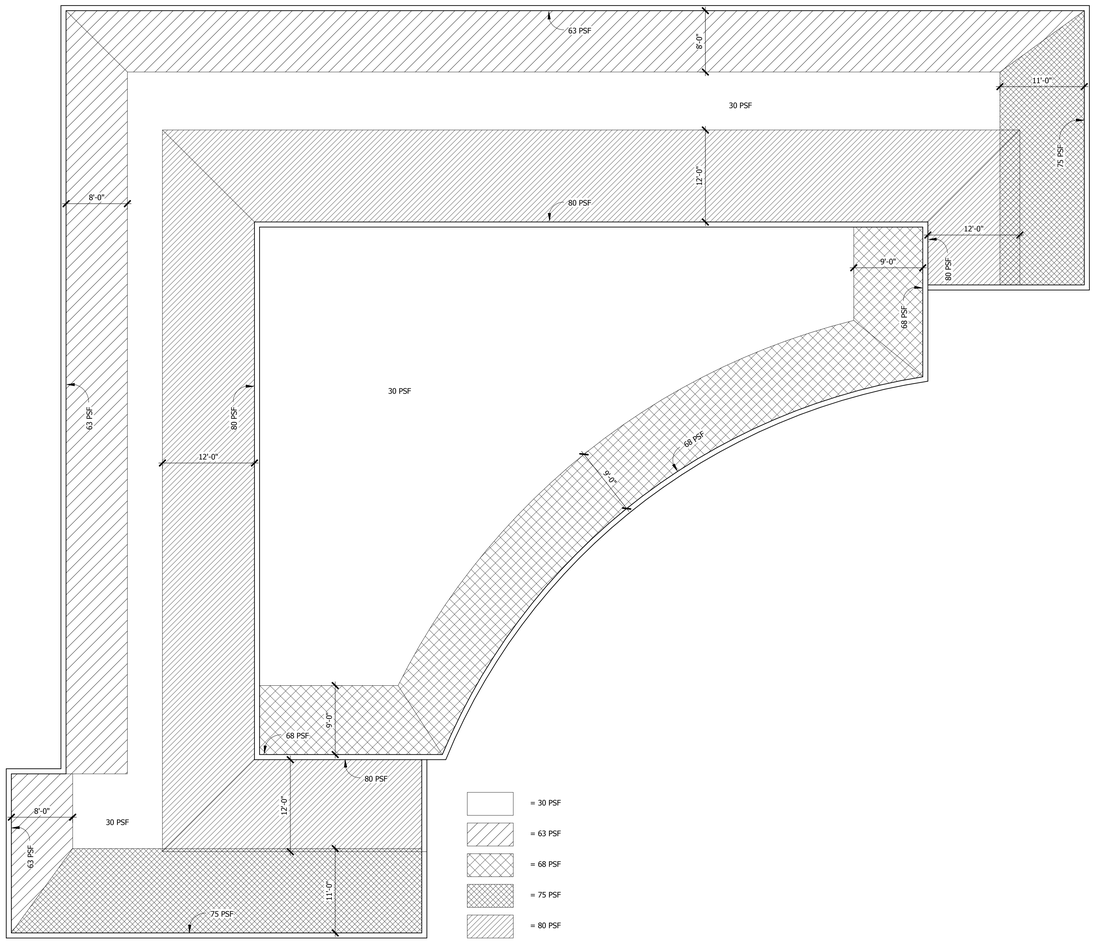

1 SNOW LOADING DIAGRAM (DEDUCTS 4,5 & 6)
1/8" = 1'-0"

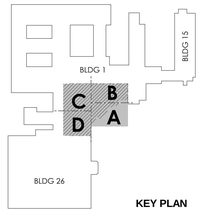

KEY PLAN

No.	Description	Date

ENGINEERS & CONSULTANTS:

CIVIL
SK Design Group, Inc.
4600 College Blvd, Suite 100
Overland Park, KS 66211
913.451.1818

STRUCTURAL
Leigh & O'Kane
9201 Ward Parkway, Suite 301
Kansas City, MO 64114
816.444.3144

MECHANICAL, ELECTRICAL, PLUMBING, TELECOM, SECURITY
InSite Group, Inc.
1950 NW Copper Oaks Cr
Blue Springs, MO 64015
816.228.3377

FIRE PROTECTION & LIFE SAFETY
FSC, Inc.
9225 Indian Creek Pkwy, Ste 300
Overland Park, KS 66210
913.722.3473

ASBESTOS ABATEMENT
Terracon
13910 W 96th Terrace
Lenexa, KS 66215
913.492.7777

COMMISSIONING
Pro Balance, Inc.
5411 West 40 Highway
Blue Springs, MO 64015
816.228.7800

STATE OF MISSOURI
WAYNE NEEL HESS
NUMBER PE-2010019551
04/13/16
PROFESSIONAL ENGINEER

ARCHITECT:

WELLNER architects inc.
Wellner Architects, Inc.
802 Broadway Blvd, 4th Floor
Kansas City, MO 64105
816.221.0017

Drawing Title
LOWER AND UPPER JOIST AND DECK LOADING DIAGRAM, BLDG 1, DEDUCTS 4,5,6

Approved: Kathleen R. Fogarty, Medical Center Director

Project Title
CONSTRUCT OEF/OIF AND SPECIALTY CARE ADDITION

Location
4801 LINWOOD BLVD, KANSAS CITY, MO 64128

Date	Checked	Drawn
30 March 2016	WNH	CMS

Project Number: 589-CA3-472
Building Number: 1
Drawing Number: S-123.A
Dwg. 41 of 188

Office of Construction and Facilities Management

Department of Veterans Affairs

4/13/2016 12:34:22 PM

VA FORM 08-6231

CONSTRUCTION DOCUMENTS 100% SUBMISSION

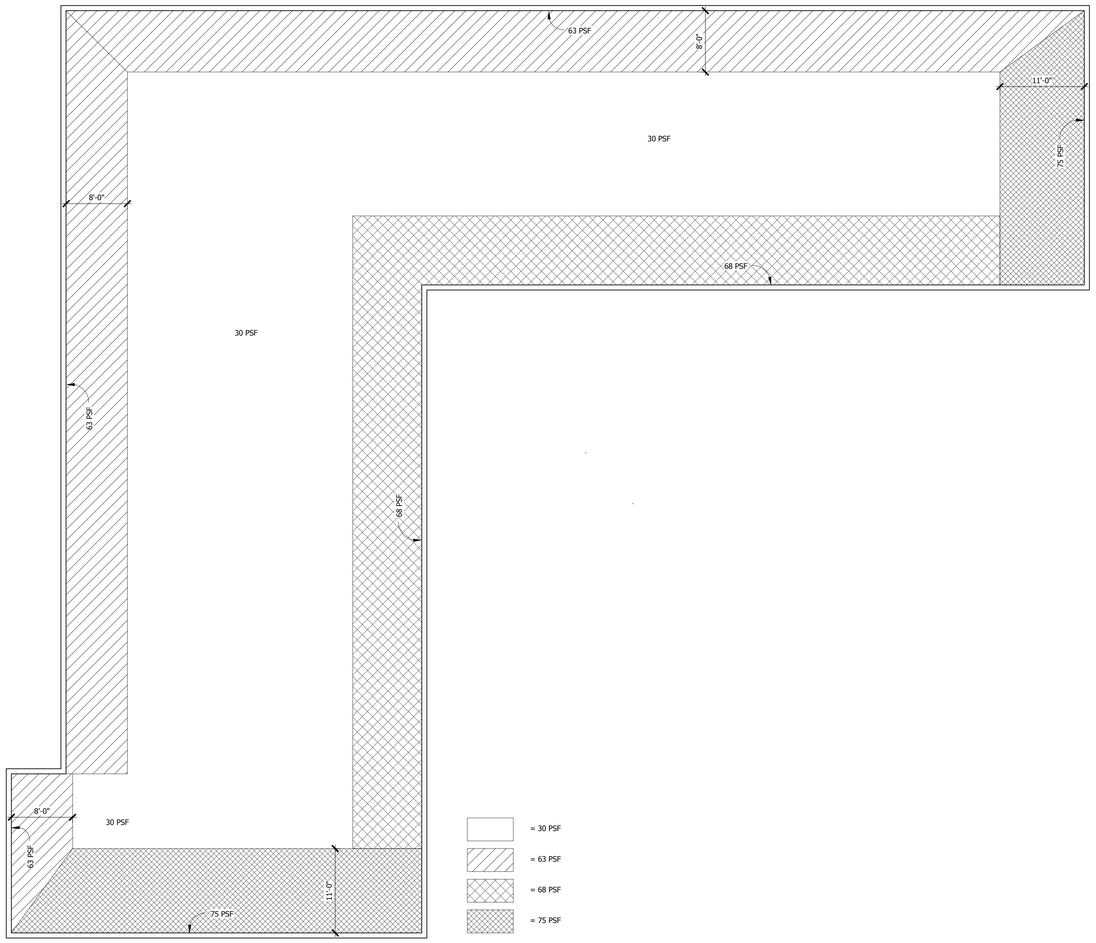

1 SNOW LOADING DIAGRAM (DEDUCT 7)
1/8" = 1'-0"

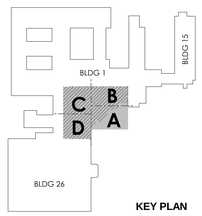

KEY PLAN

No.	Description	Date

ENGINEERS & CONSULTANTS:

CIVIL
SK Design Group, Inc.
4600 College Blvd, Suite 100
Overland Park, KS 66211
913.451.1818

STRUCTURAL
Leigh & O'Kane
9201 Ward Parkway, Suite 301
Kansas City, MO 64114
816.444.3144

MECHANICAL, ELECTRICAL, PLUMBING, TELECOM, SECURITY
InSite Group, Inc.
1950 NW Copper Oaks Cr
Blue Springs, MO 64015
816.228.3377

FIRE PROTECTION & LIFE SAFETY
FSC, Inc.
9225 Indian Creek Pkwy, Ste 300
Overland Park, KS 66210
913.722.3473

ASBESTOS ABATEMENT
Terracon
13910 W 96th Terrace
Lenexa, KS 66215
913.492.7777

COMMISSIONING
Pro Balance, Inc.
5411 West 40 Highway
Blue Springs, MO 64015
816.228.7800

STATE OF MISSOURI
WAYNE NEIL HESS
NUMBER PE-2010019551
04/13/16
PROFESSIONAL ENGINEER

ARCHITECT:

WELLNER architects inc.
Wellner Architects, Inc.
802 Broadway Blvd, 4th Floor
Kansas City, MO 64105
816.221.0017

Drawing Title: JOIST AND DECK LOADING DIAGRAM, BLDG 1, DEDUCT 7

Approved: Kathleen R. Fogarty, Medical Center Director

Project Title: CONSTRUCT OEF/OIF AND SPECIALTY CARE ADDITION

Location: 4801 LINWOOD BLVD, KANSAS CITY, MO 64128

Date: 30 March 2016 | Checked: WNH | Drawn: CMS

Project Number: 589-CA3-472

Building Number: 1

Drawing Number: S-123.B

Dwg. 42 of 188

Office of Construction and Facilities Management

Department of Veterans Affairs

CONSTRUCTION DOCUMENTS 100% SUBMISSION

4/13/2016 12:35:11 PM

VA FORM 08-6231

ELEVATIONS OMITTED FROM DEDUCT 7: 1-6/S-201 AND OMIT FROM ALL SUBSEQUENT DEDUCTS.

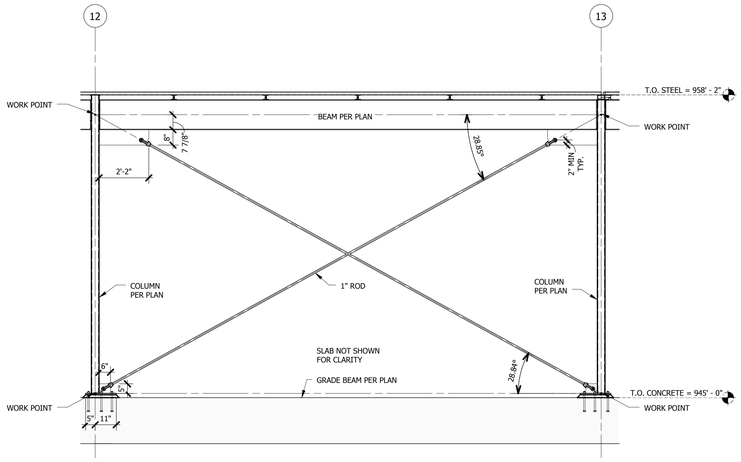

6 EXT. X-BRACING ALONG GRID B (A)
3/8" = 1'-0"

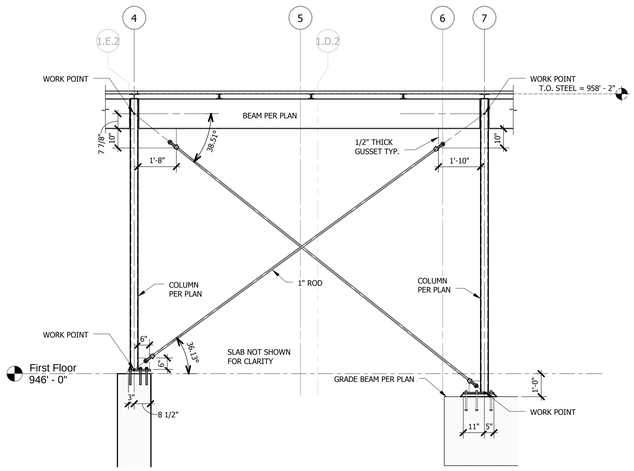

4 EXT. X-BRACING ALONG GRID B (B)
3/8" = 1'-0"

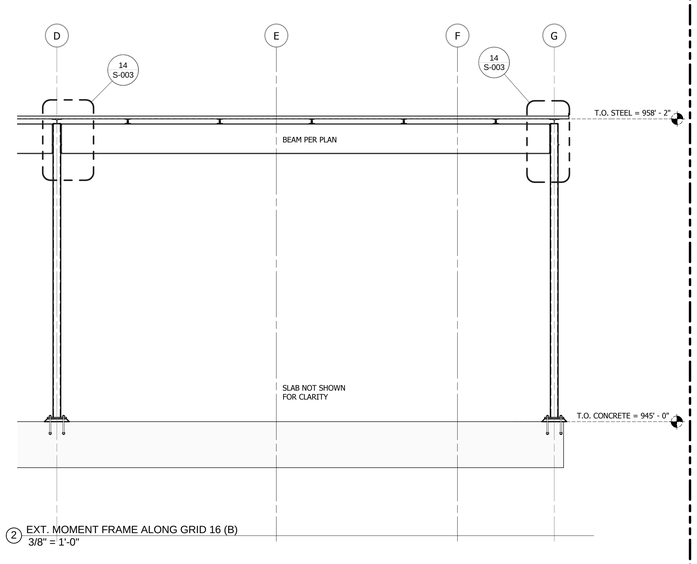

2 EXT. MOMENT FRAME ALONG GRID 16 (B)
3/8" = 1'-0"

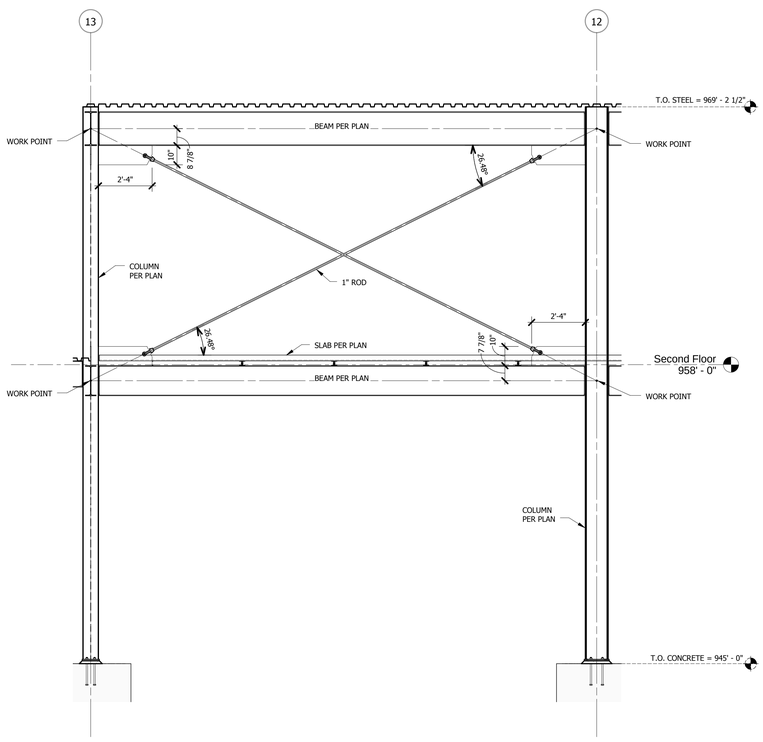

5 INT. X-BRACING ALONG GRID D (A)
3/8" = 1'-0"

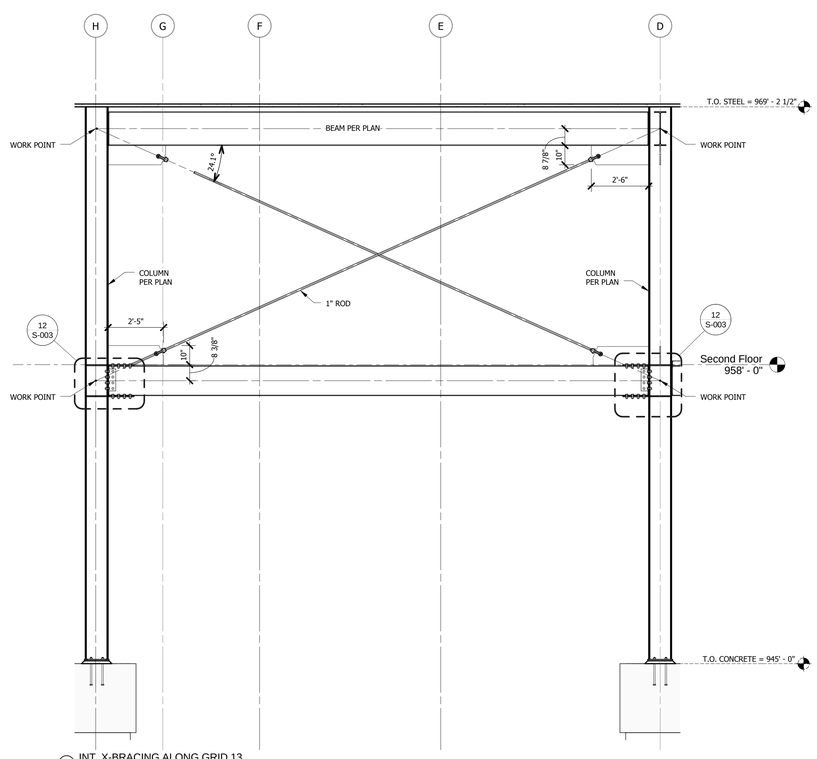

3 INT. X-BRACING ALONG GRID 13
3/8" = 1'-0"

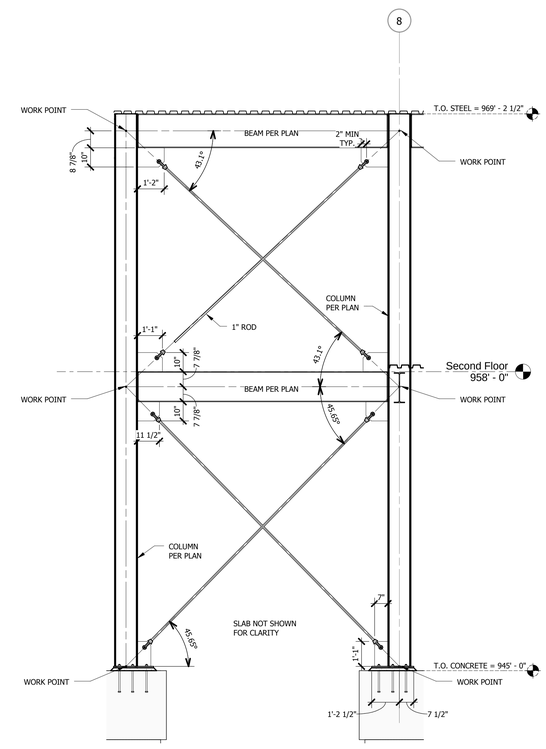

1 EXT. X-BRACING ALONG GRID Q
3/8" = 1'-0"

No.	Description	Date

ENGINEERS & CONSULTANTS:

CIVIL
SK Design Group, Inc.
4600 College Blvd, Suite 100
Overland Park, KS 66211
913.451.1818

STRUCTURAL
Leigh & O'Kane
9201 Ward Parkway, Suite 301
Kansas City, MO 64114
816.444.3144

MECHANICAL, ELECTRICAL, PLUMBING, TELECOM, SECURITY
InSite Group, Inc.
1950 NW Copper Oaks Cr
Blue Springs, MO 64015
816.228.3377

FIRE PROTECTION & LIFE SAFETY
FSC, Inc.
9225 Indian Creek Pkwy, Ste 300
Overland Park, KS 66210
913.722.3473

ASBESTOS ABATEMENT
Terracon
13910 W 96th Terrace
Lenexa, KS 66215
913.492.7777

COMMISSIONING
pro balance
5411 West 40 Highway
Blue Springs, MO 64015
816.228.7800

STATE OF MISSOURI
WAYNE NEEL HESS
NUMBER PE-2010019551
04/13/16
PROFESSIONAL ENGINEER

ARCHITECT:
WELLNER architects inc.
Wellner Architects, Inc.
802 Broadway Blvd, 4th Floor
Kansas City, MO 64105
816.221.0017

Drawing Title: X-BRACING ELEVATIONS

Approved: Kathleen R. Fogarty, Medical Center Director

Project Title: CONSTRUCT OEF/OIF AND SPECIALTY CARE ADDITION

Location: 4801 LINWOOD BLVD, KANSAS CITY, MO 64128

Date: 30 March 2016 | Checked: WNH | Drawn: CMS

Project Number: 589-CA3-472

Building Number: 1

Drawing Number: S-201

Dwg. 43 of 188

Office of Construction and Facilities Management

Department of Veterans Affairs

4/13/2016 12:31:48 PM

VA FORM 08-6231

ELEVATIONS OMITTED FROM DEDUCT 7: 1-5/S-202 AND OMIT FROM ALL SUBSEQUENT DEDUCTS.

ELEVATIONS OMITTED FROM DEDUCT 4: 1,3,4 & 5/S-202 AND OMIT FROM ALL SUBSEQUENT DEDUCTS.

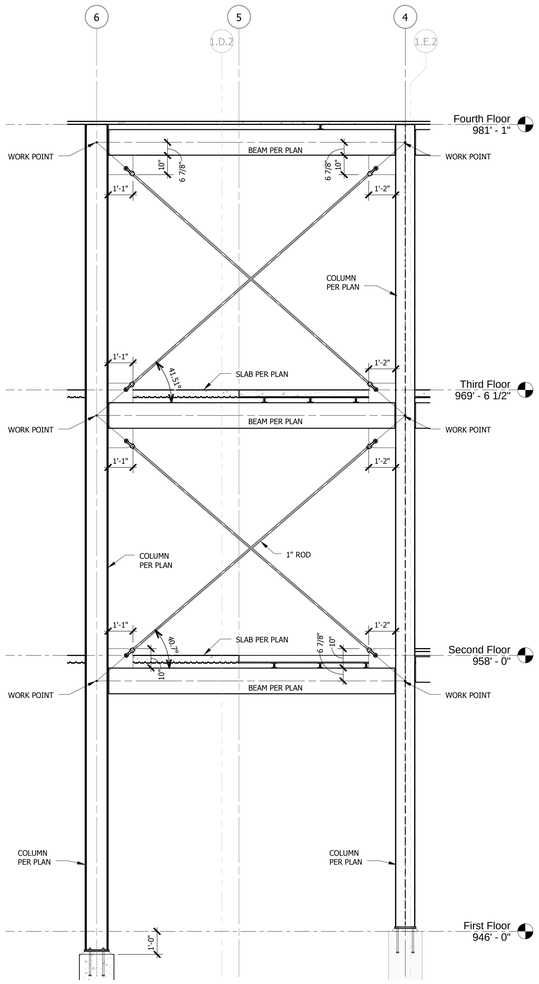

5 INT. X-BRACING ALONG GRID G
3/8" = 1'-0"

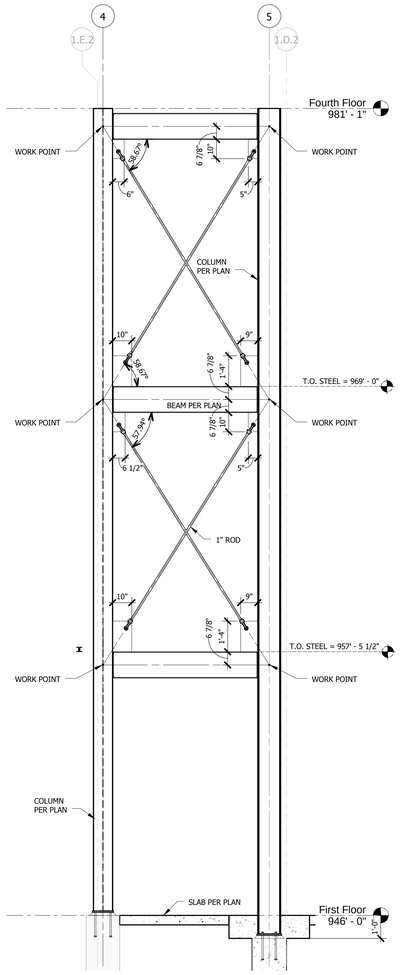

4 INT. X-BRACING ALONG GRID 1.11
3/8" = 1'-0"

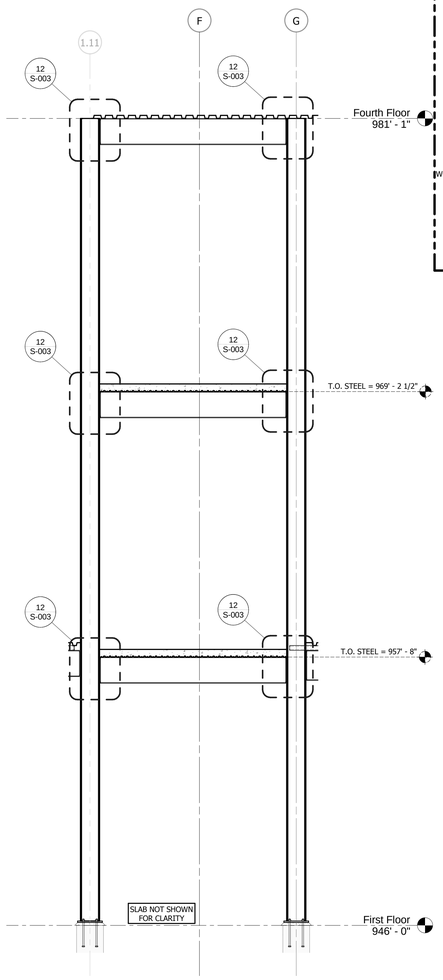

3 INT. MOMENT FRAME ALONG GRID 4
3/8" = 1'-0"

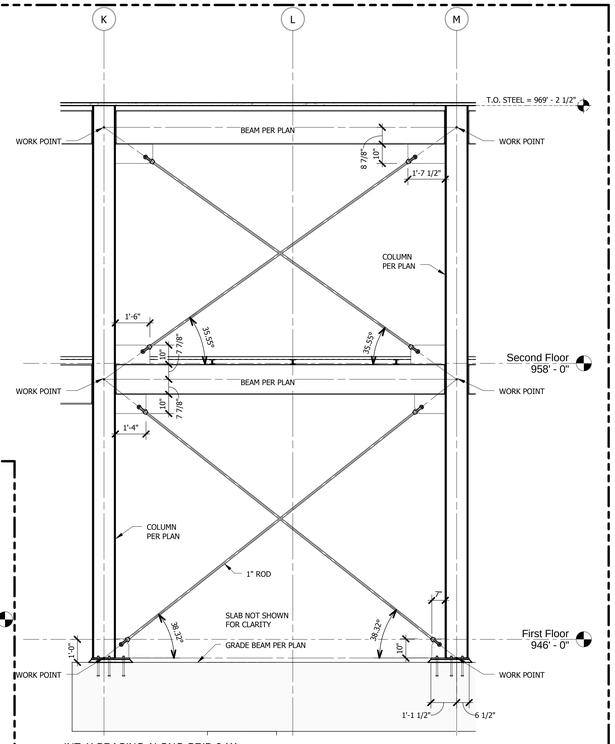

2 INT. X-BRACING ALONG GRID 6 (A)
3/8" = 1'-0"

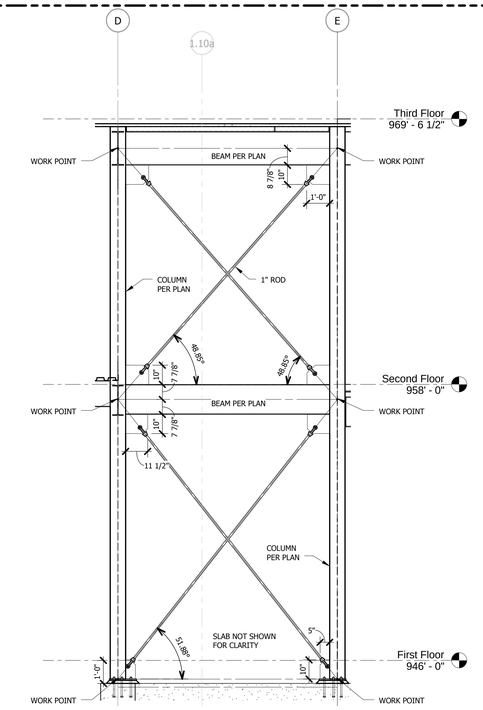

1 INT. X-BRACING ALONG GRID 9
3/8" = 1'-0"

No.	Description	Date

ENGINEERS & CONSULTANTS:

CIVIL
SK Design Group, Inc.
4600 College Blvd. Suite 100
Overland Park, KS 66211
913.451.1818

STRUCTURAL
Leigh & O'Kane
9201 Ward Parkway, Suite 301
Kansas City, MO 64114
816.444.3144

MECHANICAL, ELECTRICAL, PLUMBING, TELECOM, SECURITY
InSite Group, Inc.
1950 NW Copper Oaks Cr
Blue Springs, MO 64015
816.228.3377

FIRE PROTECTION & LIFE SAFETY
FSC, Inc.
9225 Indian Creek Pkwy, Ste 300
Overland Park, KS 66210
913.722.3473

ASBESTOS ABATEMENT
Terracon
13910 W 96th Terrace
Lenexa, KS 66215
913.492.7777

COMMISSIONING
Pro Balance, Inc.
5411 West 40 Highway
Blue Springs, MO 64015
816.228.7800

STATE OF MISSOURI
WAYNE NEEL HESS
NUMBER PE-2010019551
04/13/16
PROFESSIONAL ENGINEER

ARCHITECT:

WELLNER architects inc.
Wellner Architects, Inc.
802 Broadway Blvd, 4th Floor
Kansas City, MO 64105
816.221.0017

Drawing Title: X-BRACING ELEVATIONS

Approved: Kathleen R. Fogarty, Medical Center Director

Project Title: CONSTRUCT OEF/OIF AND SPECIALTY CARE ADDITION

Location: 4801 LINWOOD BLVD, KANSAS CITY, MO 64128

Date: 30 March 2016 | Checked: WNH | Drawn: CMS

Project Number: 589-CA3-472

Building Number: 1

Drawing Number: S-202

Dwg. 44 of 188

Office of Construction and Facilities Management

Department of Veterans Affairs

4/13/2016 12:31:49 PM

VA FORM 08-6231

SOLICITATION FOR CONSTRUCTION PROPOSAL DOCUMENTS

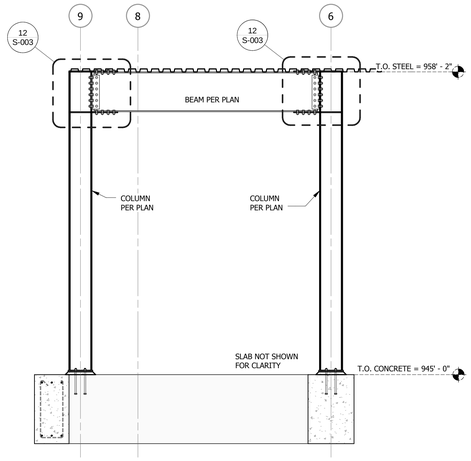

9 INT. MOMENT FRAME ALONG GRID K
3/8" = 1'-0"

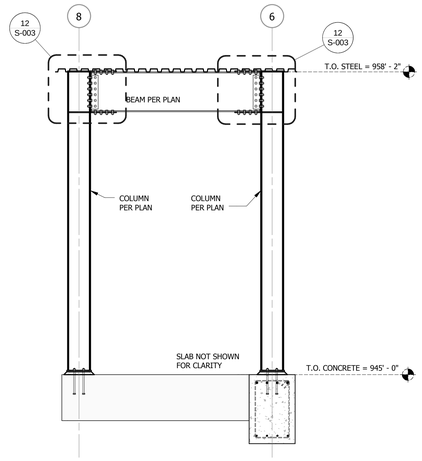

8 INT. MOMENT FRAME ALONG GRID Q
3/8" = 1'-0"

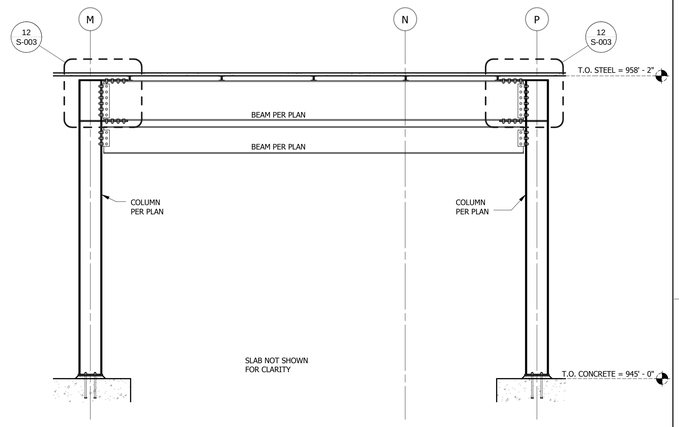

7 EXT. MOMENT FRAME ALONG GRID 9
3/8" = 1'-0"

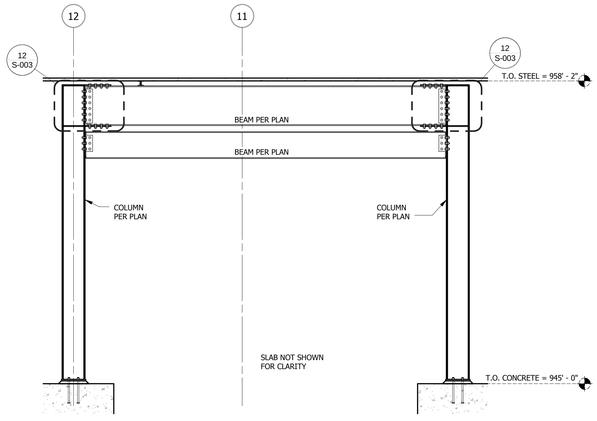

5 EXT. MOMENT FRAME ALONG GRID H
3/8" = 1'-0"

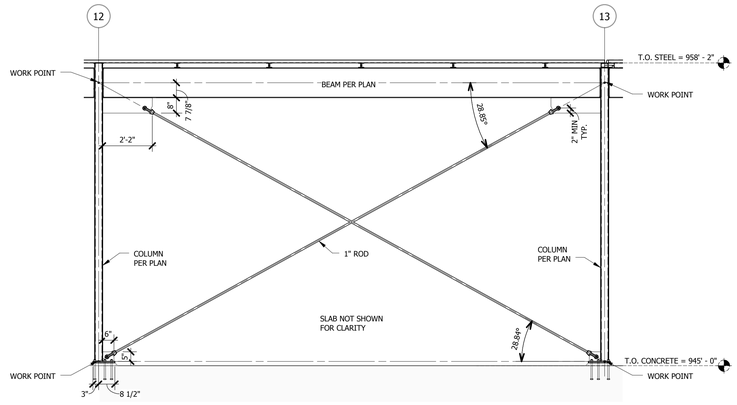

6 EXT. X-BRACING ALONG GRID B (A)
3/8" = 1'-0"

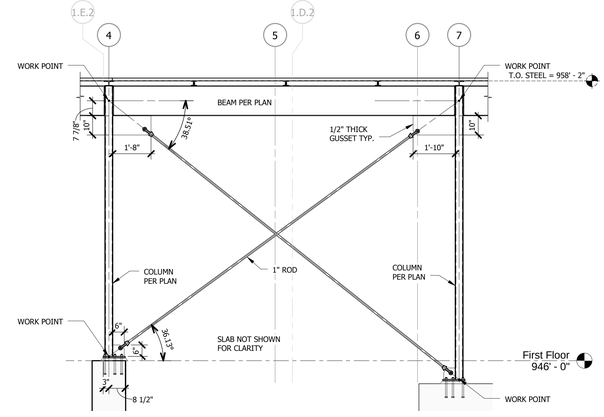

4 EXT. X-BRACING ALONG GRID B (B)
3/8" = 1'-0"

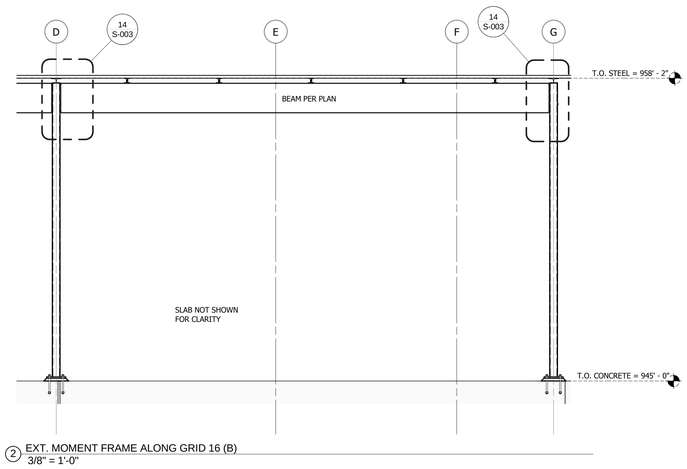

2 EXT. MOMENT FRAME ALONG GRID 16 (B)
3/8" = 1'-0"

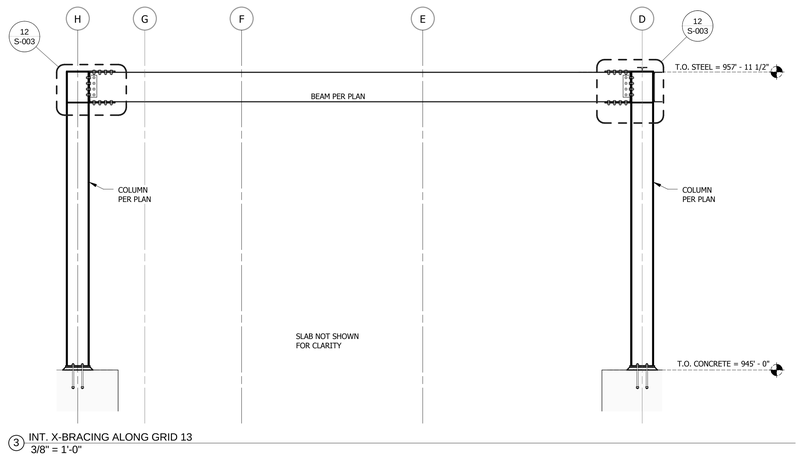

3 INT. X-BRACING ALONG GRID 13
3/8" = 1'-0"

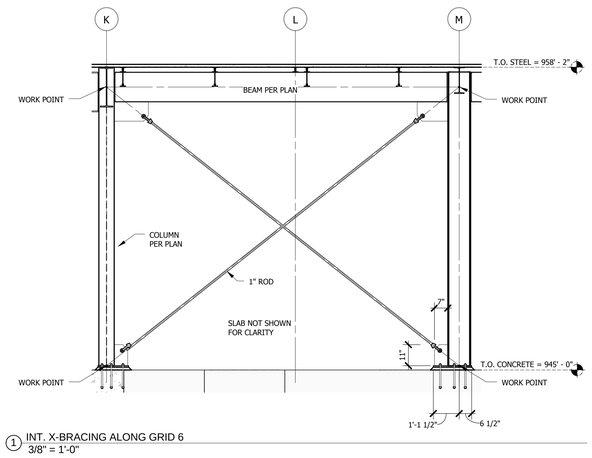

1 INT. X-BRACING ALONG GRID 6
3/8" = 1'-0"

No.	Description	Date

ENGINEERS & CONSULTANTS:

CIVIL
SK Design Group, Inc.
Since 1989
SK Design Group, Inc.
4600 College Blvd. Suite 100
Overland Park, KS 66211
913.451.1818

STRUCTURAL
Leigh & O'Kane
Leigh & O'Kane
9201 Ward Parkway, Suite 301
Kansas City, MO 64114
816.444.3144

MECHANICAL, ELECTRICAL, PLUMBING, TELECOM, SECURITY
InSite Group, Inc.
Consulting Engineers
InSite Group, Inc.
1950 NW Copper Oaks Cr
Blue Springs, MO 64015
816.228.3377

FIRE PROTECTION & LIFE SAFETY
FSC, Inc.
Consulting Engineers
FSC, Inc.
9225 Indian Creek Pkwy, Ste 300
Overland Park, KS 66210
913.722.3473

ASBESTOS ABATEMENT
Terracon
Consulting Engineers and Scientists
Terracon
13910 W 96th Terrace
Lenexa, KS 66215
913.492.7777

COMMISSIONING
pb pro balance
Pro Balance, Inc.
5411 West 40 Highway
Blue Springs, MO 64015
816.228.7800

STATE OF MISSOURI
WAYNE NEEL HESS
NUMBER PE-2010019551
04/13/16
PROFESSIONAL ENGINEER

ARCHITECT:

WELLNER architects inc.
Wellner Architects, Inc.
802 Broadway Blvd, 4th Floor
Kansas City, MO 64105
816.221.0017

Drawing Title
X-BRACING ELEVATIONS

Approved: Kathleen R. Fogarty, Medical Center Director

Project Title
CONSTRUCT OEF/OIF AND SPECIALTY CARE ADDITION

Location
4801 LINWOOD BLVD, KANSAS CITY, MO 64128

Date	Checked	Drawn
30 March 2016	WNH	CMS

Project Number
589-CA3-472

Building Number
1

Drawing Number
S-203

Dwg. 45 of 188

Office of Construction and Facilities Management

Department of Veterans Affairs

CONSTRUCTION DOCUMENTS 100% SUBMISSION

4/13/2016 12:35:12 PM

VA FORM 08-6231

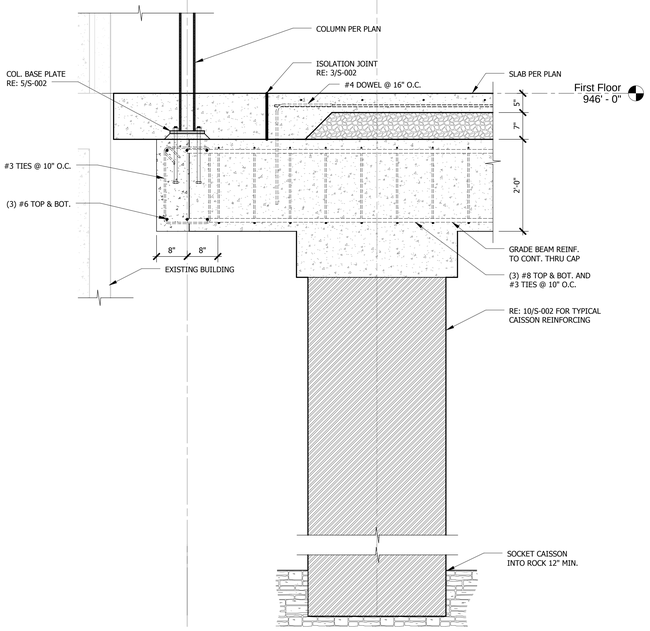

12 COLUMN ALONG EXISTING BUILDING SECTION
3/4" = 1'-0"

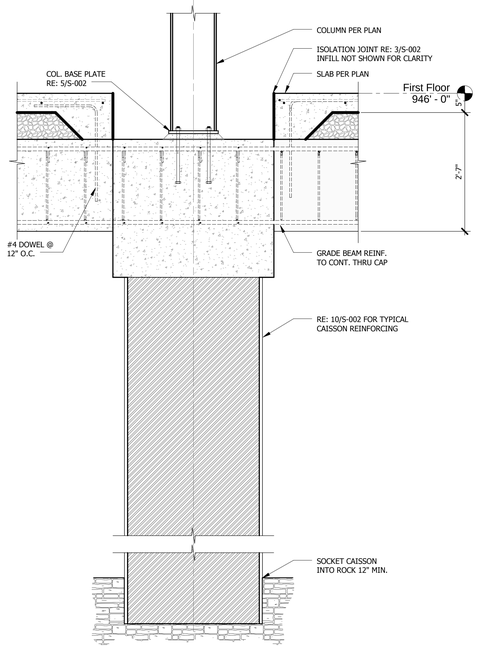

9 TYPICAL CAISSON WITH GRADE BEAM REINFORCING
3/4" = 1'-0"

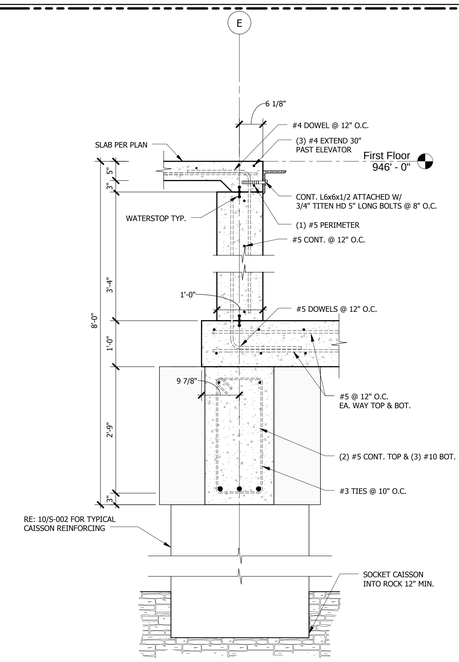

6 ELEVATOR FRAMING AT OPENING
3/4" = 1'-0"

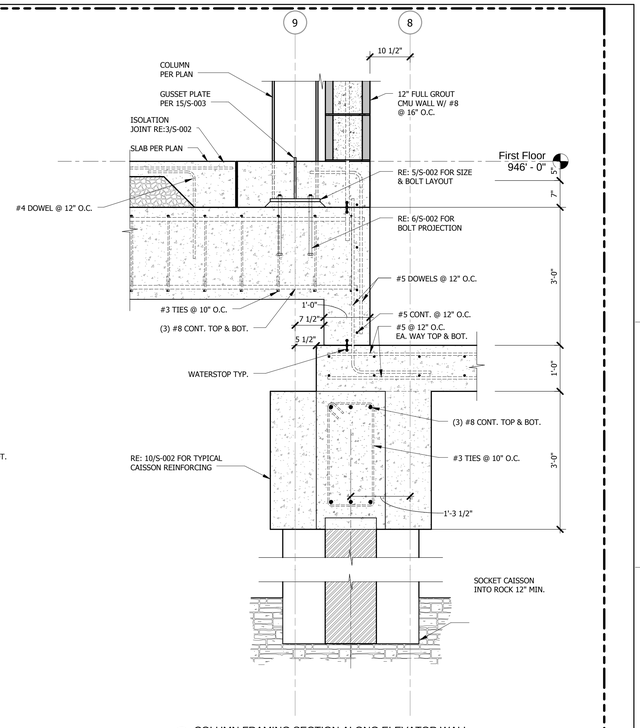

3 COLUMN FRAMING SECTION ALONG ELEVATOR WALL
3/4" = 1'-0"

SECTIONS OMITTED FROM DEDUCT 4: 3 & 6/S-301 AND OMIT FROM ALL SUBSEQUENT DEDUCTS.

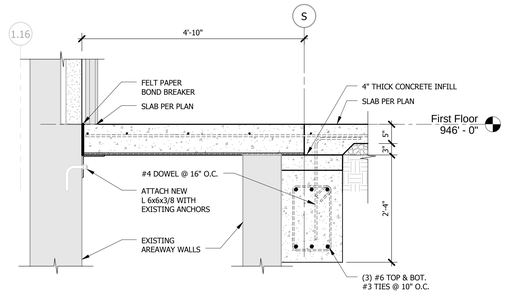

11 SLAB BEARING ON EXISTING WALL
3/4" = 1'-0"

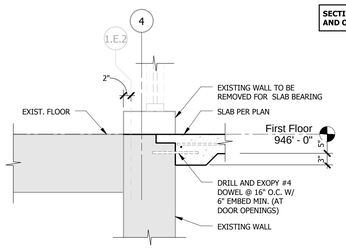

8 FLOOR FRAMING AT EXISTING FLOOR
3/4" = 1'-0"

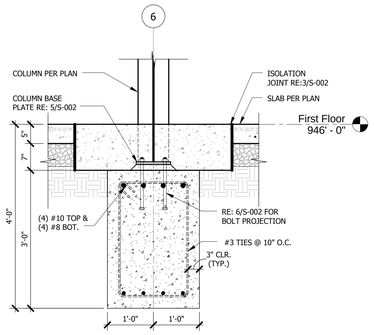

5 INTERIOR COLUMN FOOTING SECTION
3/4" = 1'-0"

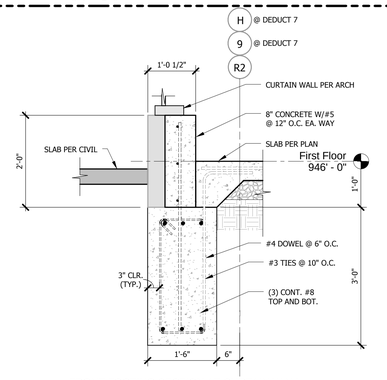

2 FRONT FOOTING SECTION AT CURTAIN WALL
3/4" = 1'-0"

SECTIONS OMITTED FROM DEDUCT 5: 10/S-301 AND OMIT FROM ALL SUBSEQUENT DEDUCTS.

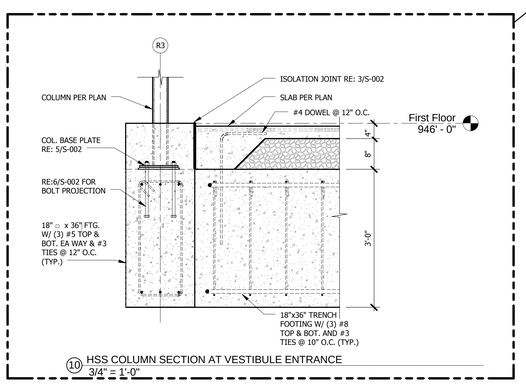

10 HSS COLUMN SECTION AT VESTIBULE ENTRANCE
3/4" = 1'-0"

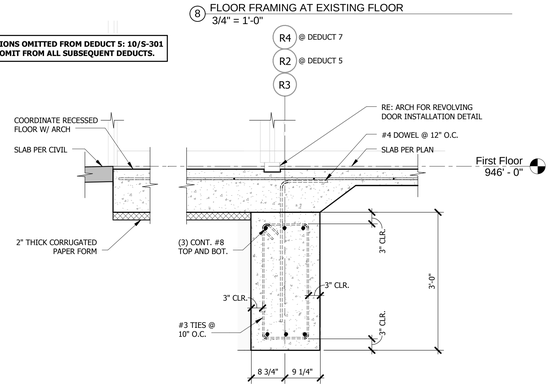

7 FOOTING SECTION AT VESTIBULE
3/4" = 1'-0"

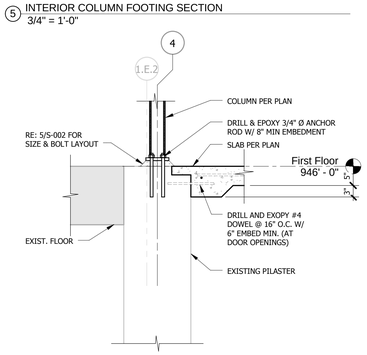

4 COLUMN AT EXISTING PILASTER SECTION
3/4" = 1'-0"

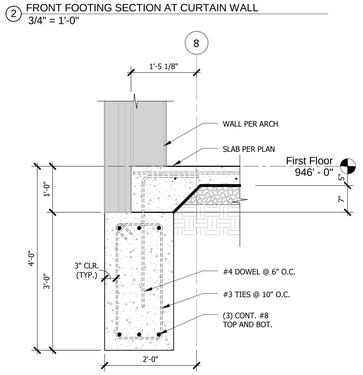

1 FRONT FOOTING SECTION AT STONE VENEER WALL
3/4" = 1'-0"

No.	Description	Date

ENGINEERS & CONSULTANTS:

CIVIL	STRUCTURAL	MECHANICAL, ELECTRICAL, PLUMBING, TELECOM, SECURITY	FIRE PROTECTION & LIFE SAFETY	ASBESTOS ABATEMENT	COMMISSIONING
SK Design Group, Inc.	Leigh & O'Kane	InSite Group, Inc.	FSC, Inc.	Terracon	pro balance
SK Design Group, Inc. 4600 College Blvd. Suite 100 Overland Park, KS 66211 913.451.1818	Leigh & O'Kane 9201 Ward Parkway, Suite 301 Kansas City, MO 64114 816.444.3144	InSite Group, Inc. 1950 NW Copper Oaks Cr Blue Springs, MO 64015 816.228.3377	FSC, Inc. 9225 Indian Creek Pkwy, Ste 300 Overland Park, KS 66210 913.722.3473	Terracon 13910 W 96th Terrace Lenexa, KS 66215 913.492.7777	Pro Balance, Inc. 5411 West 40 Highway Blue Springs, MO 64015 816.228.7800

STATE OF MISSOURI
WAYNE NEEL HESS
NUMBER PE-2010019551
04/30/16
PROFESSIONAL ENGINEER

ARCHITECT:

WELLNER architects inc.

Wellner Architects, Inc.
802 Broadway Blvd, 4th Floor
Kansas City, MO 64105
816.221.0017

Drawing Title: FOUNDATION SECTIONS

Approved: Kathleen R. Fogarty, Medical Center Director

Project Title: CONSTRUCT OEF/OIF AND SPECIALTY CARE ADDITION

Location: 4801 LINWOOD BLVD, KANSAS CITY, MO 64128

Date: 30 March 2016 | Checked: WNH | Drawn: CMS

Project Number: 589-CA3-472

Building Number: 1

Drawing Number: S-301

Dwg. 46 of 188

Office of Construction and Facilities Management

Department of Veterans Affairs

4/13/2016 12:31:59 PM

VA FORM 08-6231

SOLICITATION FOR CONSTRUCTION PROPOSAL DOCUMENTS

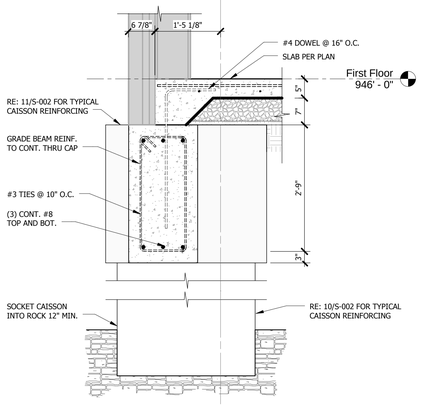

12 EXT. SLAB EDGE
3/4" = 1'-0"

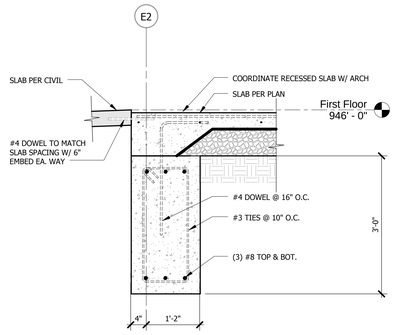

9 VESTIBULE SIDE DOOR SLAB SECTION
3/4" = 1'-0"

SECTIONS OMITTED FROM DEDUCT 5: 9/S-302 AND OMIT FROM ALL SUBSEQUENT DEDUCTS.

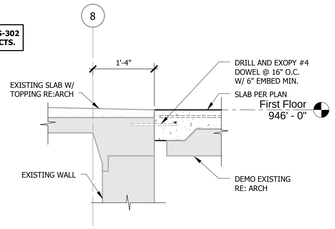

6 SLAB SECTION AT EXISTING SLAB
3/4" = 1'-0"

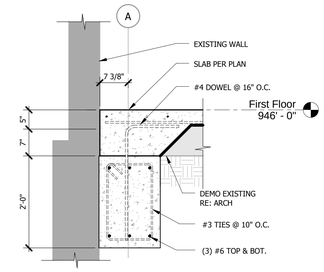

3 SLAB EDGE ALONG GRID A
3/4" = 1'-0"

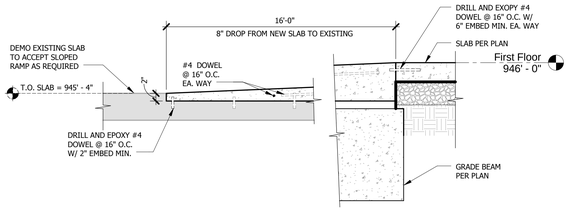

11 SLAB SECTION AT SLOPING SLAB
3/4" = 1'-0"

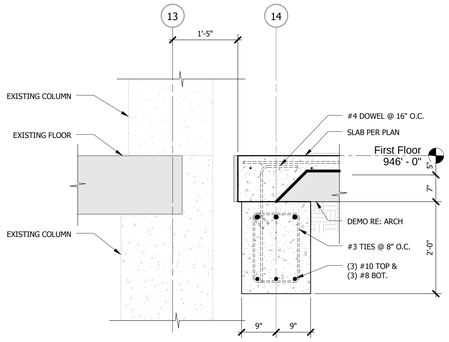

8 SLAB EDGE ALONG GRID 13
3/4" = 1'-0"

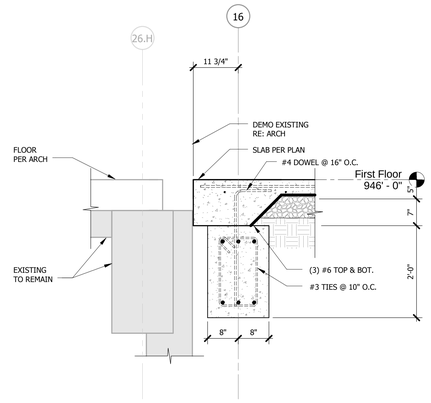

5 SLAB SECTION ALONG GRID 26.H
3/4" = 1'-0"

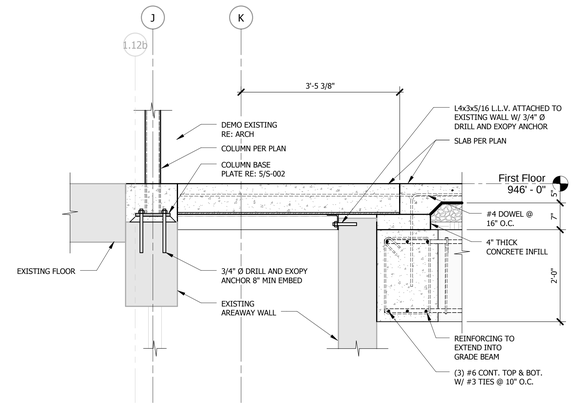

2 COLUMN FRAMING AT EXISTING WALL
3/4" = 1'-0"

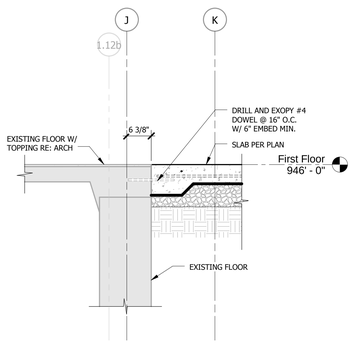

10 NEW SLAB CONNECTION W/ EXISTING SLAB SECTION
3/4" = 1'-0"

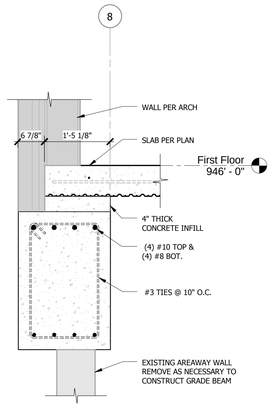

7 EXT. WALL SLAB EDGE AT AREAWAY
3/4" = 1'-0"

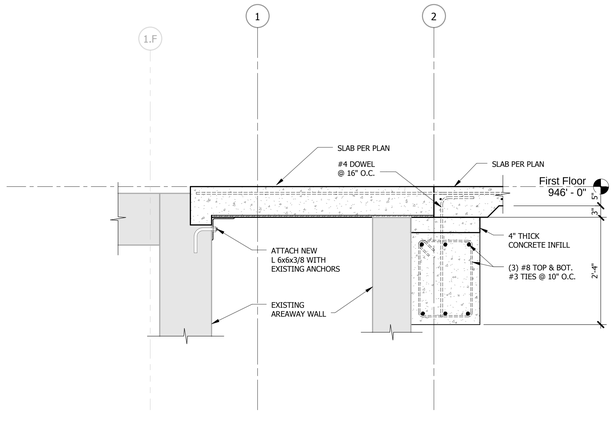

4 EXTENDED SLAB ON GRADE ALONG EXIST. BLDG.
3/4" = 1'-0"

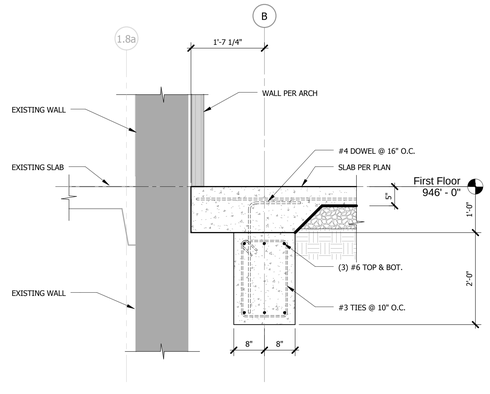

1 SLAB EDGE ALONG GRID B
3/4" = 1'-0"

No.	Description	Date

ENGINEERS & CONSULTANTS:

CIVIL
SK Design Group, Inc.
4600 College Blvd. Suite 100
Overland Park, KS 66211
913.451.1818

STRUCTURAL
Leigh & O'Kane
9201 Ward Parkway, Suite 301
Kansas City, MO 64114
816.444.3144

MECHANICAL, ELECTRICAL, PLUMBING, TELECOM, SECURITY
InSite Group, Inc.
1950 NW Copper Oaks Cr
Blue Springs, MO 64015
816.228.3377

FIRE PROTECTION & LIFE SAFETY
FSC, Inc.
9225 Indian Creek Pkwy, Ste 300
Overland Park, KS 66210
913.722.3473

ASBESTOS ABATEMENT
Terracon
13910 W 96th Terrace
Lenexa, KS 66215
913.492.7777

COMMISSIONING
pro balance
5411 West 40 Highway
Blue Springs, MO 64015
816.228.7800

STATE OF MISSOURI
WAYNE NEEL HESS
NUMBER PE-2010019551
PROFESSIONAL ENGINEER

ARCHITECT:

WELLNER architects inc.
Wellner Architects, Inc.
802 Broadway Blvd. 4th Floor
Kansas City, MO 64105
816.221.0017

Drawing Title: FOUNDATION SECTIONS

Approved: Kathleen R. Fogarty, Medical Center Director

Project Title: CONSTRUCT OEF/OIF AND SPECIALTY CARE ADDITION

Location: 4801 LINWOOD BLVD, KANSAS CITY, MO 64128

Date: 30 March 2016 | Checked: WNH | Drawn: CMS

Project Number: 589-CA3-472

Building Number: 1

Drawing Number: S-302

Dwg. 47 of 188

Office of Construction and Facilities Management

Department of Veterans Affairs

4/13/2016 12:32:04 PM

VA FORM 08-6231

SOLICITATION FOR CONSTRUCTION PROPOSAL DOCUMENTS

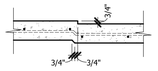

6 TYP. RECESSED SLAB SECTION
3/4" = 1'-0"

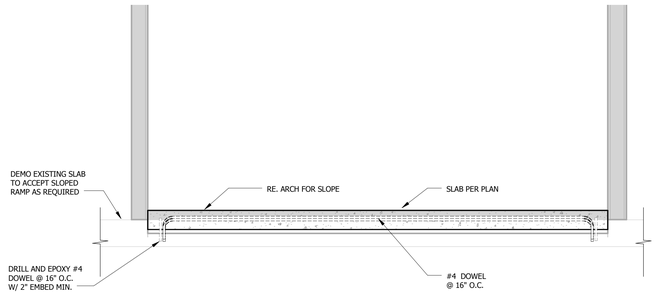

4 RAMP SECTION
3/4" = 1'-0"

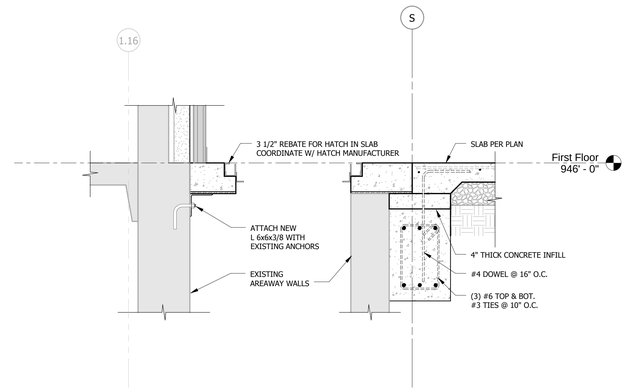

2 HATCH IN-FLOOR SECTION
3/4" = 1'-0"

SECTIONS OMITTED FROM DEDUCT 4: 5/S-303 AND OMIT FROM ALL SUBSEQUENT DEDUCTS.

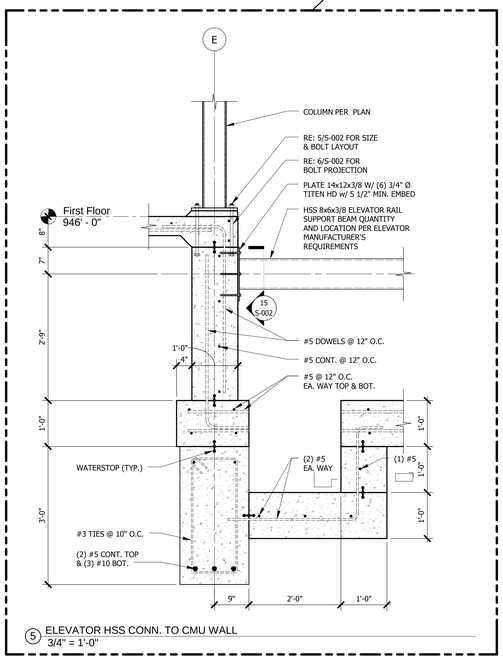

5 ELEVATOR HSS CONN. TO CMU WALL
3/4" = 1'-0"

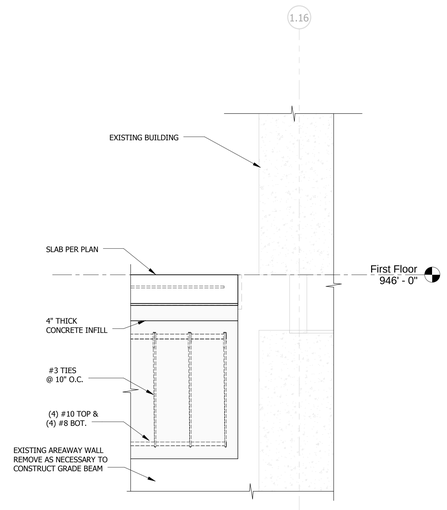

3 GRADE BEAM AT EXISTING BUILDING
3/4" = 1'-0"

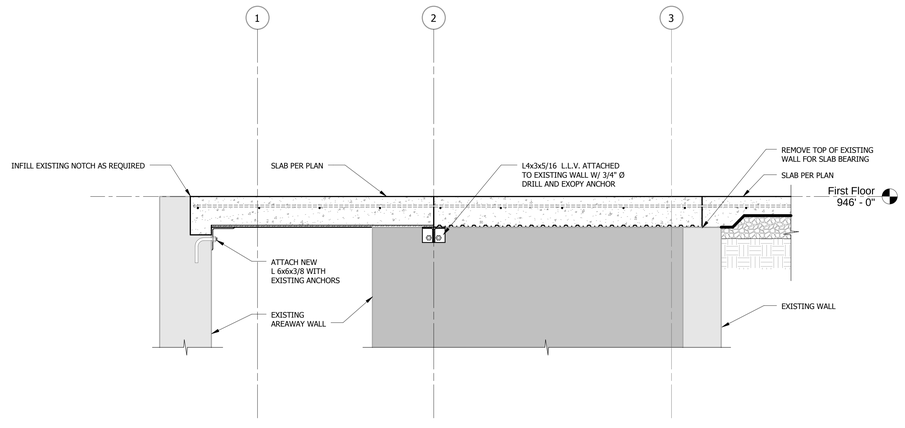

1 SLAB SPAN CHANGE OVER AREA WAY SECTION
3/4" = 1'-0"

No.	Description	Date

ENGINEERS & CONSULTANTS:

CIVIL
SK Design Group, Inc.
4600 College Blvd, Suite 100
Overland Park, KS 66211
913.451.1818

STRUCTURAL
Leigh & O'Kane
9201 Ward Parkway, Suite 301
Kansas City, MO 64114
816.444.3144

MECHANICAL, ELECTRICAL, PLUMBING, TELECOM, SECURITY
InSite Group, Inc.
1950 NW Copper Oaks Cr
Blue Springs, MO 64015
816.228.3377

FIRE PROTECTION & LIFE SAFETY
FSC, Inc.
9225 Indian Creek Pkwy, Ste 300
Overland Park, KS 66210
913.722.3473

ASBESTOS ABATEMENT
Terracon
13910 W 96th Terrace
Lenexa, KS 66215
913.492.7777

COMMISSIONING
Pro Balance, Inc.
5411 West 40 Highway
Blue Springs, MO 64015
816.228.7800

STATE OF MISSOURI
WAYNE NEIL HESS
NUMBER PE-2010019551
04/13/16
PROFESSIONAL ENGINEER

ARCHITECT:
WELLNER architects inc.
Wellner Architects, Inc.
802 Broadway Blvd, 4th Floor
Kansas City, MO 64105
816.221.0017

Drawing Title: FOUNDATION SECTIONS

Approved: Kathleen R. Fogarty, Medical Center Director

Project Title: CONSTRUCT OEF/OIF AND SPECIALTY CARE ADDITION

Location: 4801 LINWOOD BLVD, KANSAS CITY, MO 64128

Date: 30 March 2016 | Checked: WNH | Drawn: CMS

Project Number: 589-CA3-472
Building Number: 1
Drawing Number: S-303
Dwg. 48 of 188

Office of Construction and Facilities Management
Department of Veterans Affairs

4/13/2016 12:32:06 PM

VA FORM 08-6231

SOLICITATION FOR CONSTRUCTION PROPOSAL DOCUMENTS

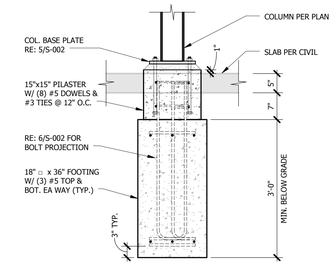

3 VESTIBULE EXT. COLUMN FOOTING SECTION
3/4" = 1'-0"

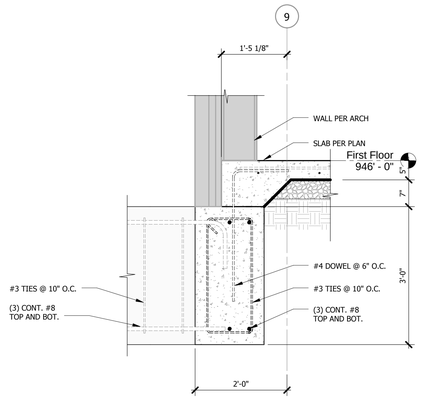

2 VESTIBULE FOOTING CONN. AT BUILDING FOOTING SECTION
3/4" = 1'-0"

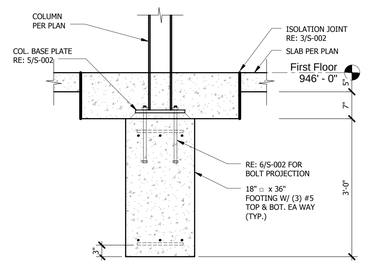

1 VESTIBULE COLUMN FOOTING SECTION
3/4" = 1'-0"

No.	Description	Date

ENGINEERS & CONSULTANTS:

CIVIL
SK Design Group, Inc.
4600 College Blvd., Suite 100
Overland Park, KS 66211
913.451.1818

STRUCTURAL
Leigh & O'Kane
9201 Ward Parkway, Suite 301
Kansas City, MO 64114
816.444.3144

MECHANICAL, ELECTRICAL, PLUMBING, TELECOM, SECURITY
InSite Group, Inc.
1950 NW Copper Oaks Cr
Blue Springs, MO 64015
816.228.3377

FIRE PROTECTION & LIFE SAFETY
FSC, Inc.
9225 Indian Creek Pkwy, Ste 300
Overland Park, KS 66210
913.722.3473

ASBESTOS ABATEMENT
Terracon
13910 W 96th Terrace
Lenexa, KS 66215
913.492.7777

COMMISSIONING
pro balance
5411 West 40 Highway
Blue Springs, MO 64015
816.228.7800

STATE OF MISSOURI
WAYNE NEEL HESS
NUMBER PE-2010019551
PROFESSIONAL ENGINEER
04/13/16

ARCHITECT:

WELLNER architects inc.
Wellner Architects, Inc.
802 Broadway Blvd. 4th Floor
Kansas City, MO 64105
816.221.0017

Drawing Title: FOUNDATION SECTIONS

Approved: Kathleen R. Fogarty, Medical Center Director

Project Title: CONSTRUCT OEF/OIF AND SPECIALTY CARE ADDITION

Location: 4801 LINWOOD BLVD, KANSAS CITY, MO 64128

Date: 30 March 2016 | Checked: WNH | Drawn: CMS

Project Number: 589-CA3-472

Building Number: 1

Drawing Number: S-304

Dwg. 49 of 188

Office of Construction and Facilities Management

Department of Veterans Affairs

4/13/2016 12:35:13 PM

VA FORM 08-6231

CONSTRUCTION DOCUMENTS 100% SUBMISSION

SECTIONS OMITTED FROM DEDUCT 4: 3,4,9,11,12 &13/S-311 AND OMIT FROM ALL SUBSEQUENT DEDUCTS.

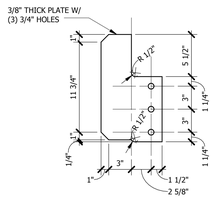

13 BEAM FRAMING INTO MOMENT FRAME CONN. DETAIL
1 1/2" = 1'-0"

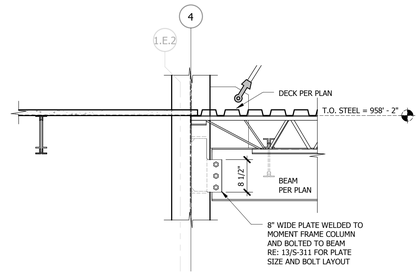

12 2ND. FLOOR BEAM FRAMING INTO MOMENT FRAME
3/4" = 1'-0"

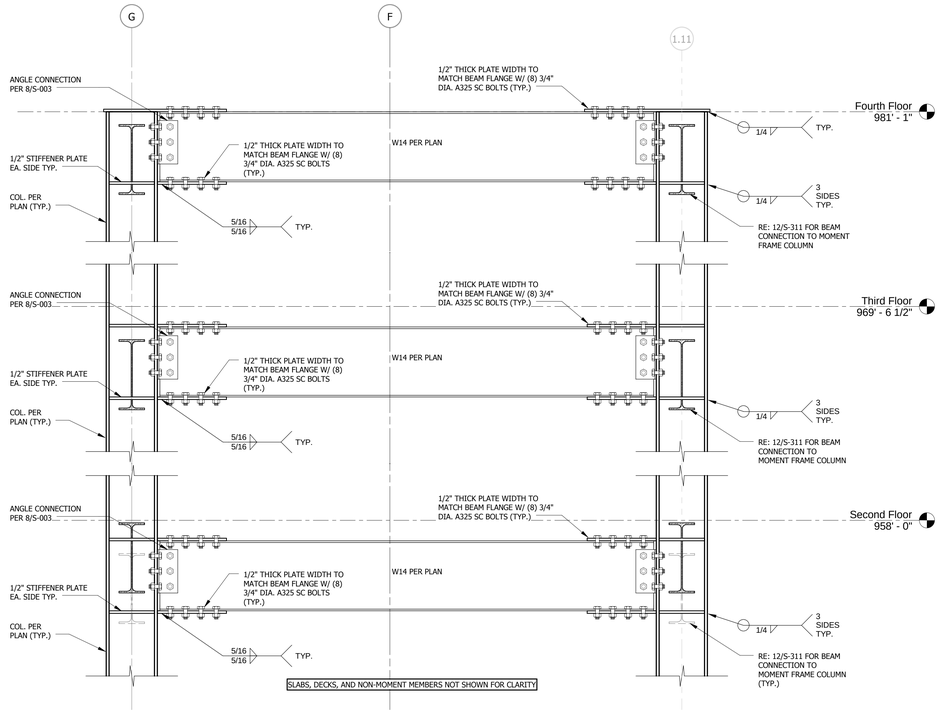

11 FULL HEIGHT MOMENT FRAME ELEVATION
1" = 1'-0"

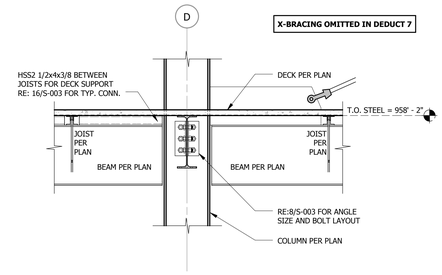

8 TYPICAL BEAM TO COLUMN SECTION
3/4" = 1'-0"

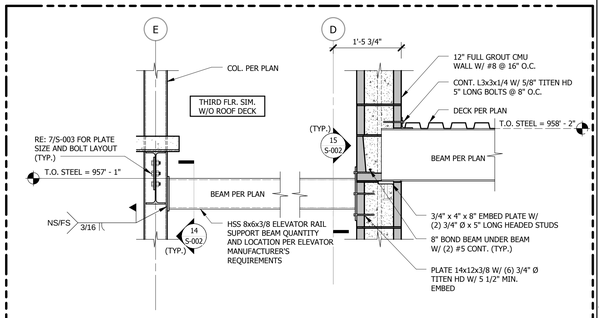

4 BEAM BEARING ON ELEVATOR WALL
3/4" = 1'-0"

SECTIONS OMITTED FROM DEDUCT 4: 3,4,9,11 & 12/S-311 AND OMIT FROM ALL SUBSEQUENT DEDUCTS.

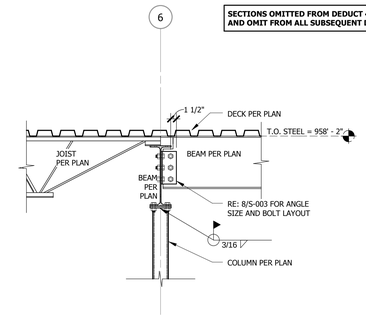

7 TYP. BEAM FRAMING INTO CANTILEVER BEAM SECTION
3/4" = 1'-0"

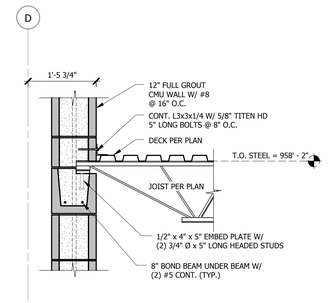

3 TYPICAL JOIST BEARING ON ELEVATOR WALL
3/4" = 1'-0"

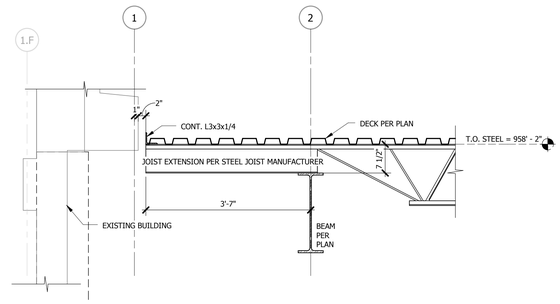

6 EXTENDED JOIST SEAT FRAMING SECTION
3/4" = 1'-0"

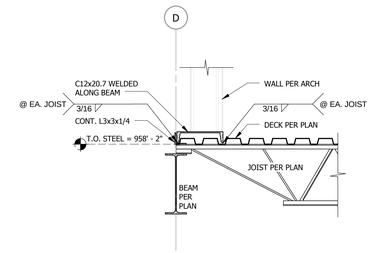

SECTIONS OMITTED FROM DEDUCT 7: 2/S-311 AND OMIT FROM ALL SUBSEQUENT DEDUCTS.

2 TYPICAL JOIST TO BEAM SECTION
3/4" = 1'-0"

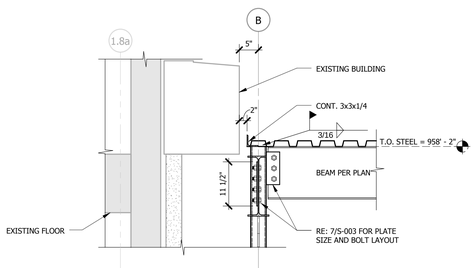

10 BEAM CONN. DETAIL ALONG EXISTING BUILDING
3/4" = 1'-0"

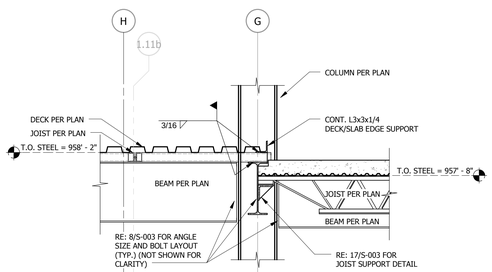

9 2ND FLR. & LOWER ROOF FRAMING AT GRID G
3/4" = 1'-0"

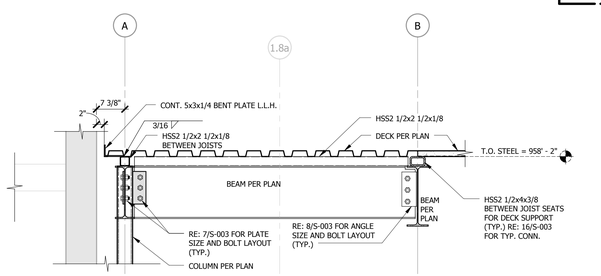

5 ROOF DECK FRAMING ALONG EXISTING BLDG.
3/4" = 1'-0"

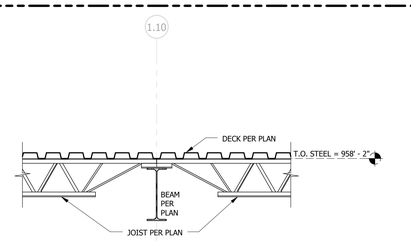

1 TYPICAL JOIST BEARING SECTION
3/4" = 1'-0"

No.	Description	Date

ENGINEERS & CONSTANTS:

CIVIL
SK Design Group, Inc.
4600 College Blvd, Suite 100
Overland Park, KS 66211
913.451.1818

STRUCTURAL
Leigh & O'Kane
9201 Ward Parkway, Suite 301
Kansas City, MO 64114
816.444.3144

MECHANICAL, ELECTRICAL, PLUMBING, TELECOM, SECURITY
InSite Group, Inc.
1950 NW Copper Oaks Cr
Blue Springs, MO 64015
816.228.3377

FIRE PROTECTION & LIFE SAFETY
FSC, Inc.
9225 Indian Creek Pkwy, Ste 300
Overland Park, KS 66210
913.722.3473

ASBESTOS ABATEMENT
Terracon
13910 W 96th Terrace
Lenexa, KS 66215
913.492.7777

COMMISSIONING
Pro Balance, Inc.
5411 West 40 Highway
Blue Springs, MO 64015
816.228.7800

STATE OF MISSOURI
WAYNE NEEL HESS
NUMBER PE-2010019551
04/13/16
PROFESSIONAL ENGINEER

ARCHITECT:

WELLNER architects inc.
Wellner Architects, Inc.
802 Broadway Blvd, 4th Floor
Kansas City, MO 64105
816.221.0017

Drawing Title: FRAMING SECTIONS

Approved: Kathleen R. Fogarty, Medical Center Director

Project Title: CONSTRUCT OEF/OIF AND SPECIALTY CARE ADDITION

Location: 4801 LINWOOD BLVD, KANSAS CITY, MO 64128

Date	Checked	Drawn
30 March 2016	WNH	CMS

Project Number: 589-CA3-472
Building Number: 1
Drawing Number: S-311
Dwg. 50 of 188

Office of Construction and Facilities Management
Department of Veterans Affairs

4/13/2016 12:32:07 PM

VA FORM 08-6231

SOLICITATION FOR CONSTRUCTION PROPOSAL DOCUMENTS

SECTIONS OMITTED FROM DEDUCT 4: 2,4,11,12,13,14 & 15/S-312 AND OMIT FROM ALL SUBSEQUENT DEDUCTS.

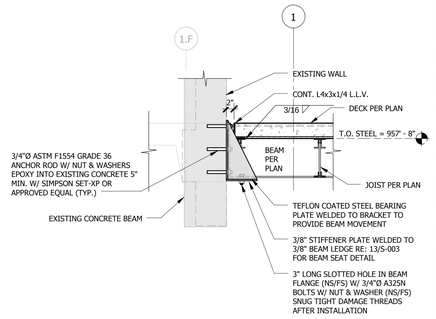

15 2ND FLR. WALKWAY FRAMING INTO EXIST. BLDG.
3/4" = 1'-0"

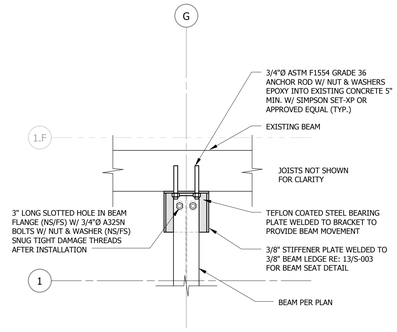

12 BEAM SEAT DETAIL ALONG EXISTING BUILDING
1" = 1'-0"

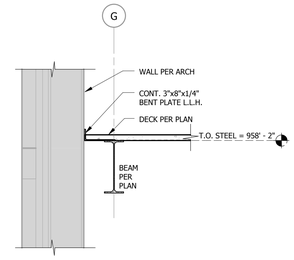

9 LOWER ROOF EDGE ALONG GRID G
3/4" = 1'-0"

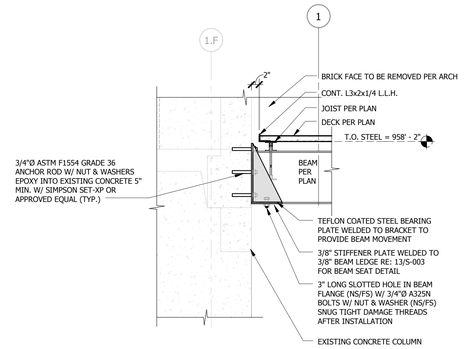

6 DECK EDGE AT LOWER ROOF SECTION
3/4" = 1'-0"

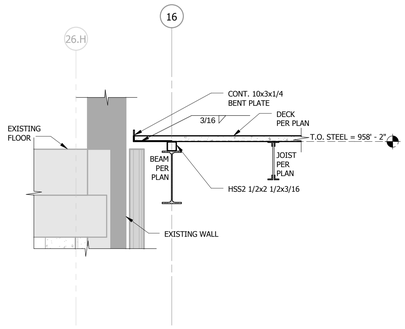

3 EXTENDED DECK PERPINDICULAR TO SPAN DIRECTION
3/4" = 1'-0"

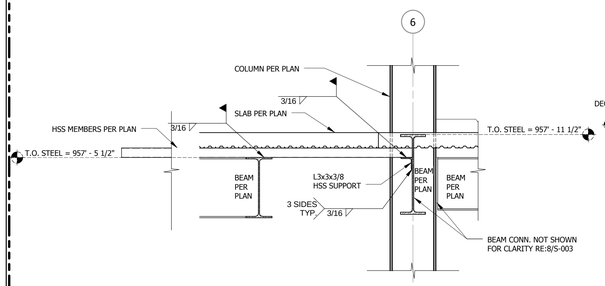

14 HSS EXTENSION AT 2ND FLOOR
3/4" = 1'-0"

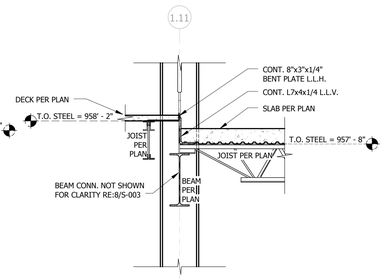

11 2ND FLOOR SLAB TO DECK CONN.
3/4" = 1'-0"

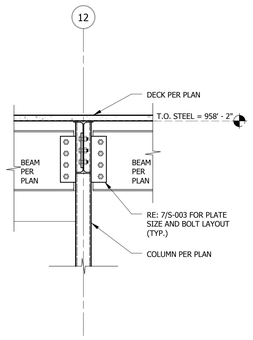

8 BEAM CONNECTION SECTION
3/4" = 1'-0"

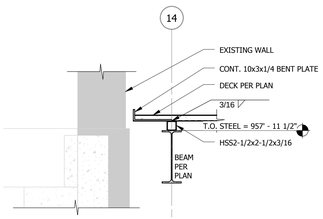

5 EXTENDED SLAB ALONG GRID 14
3/4" = 1'-0"

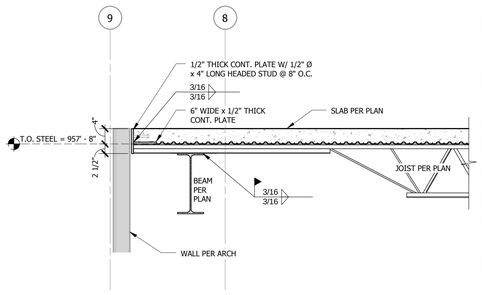

2 2ND. FLOOR EXTENDED JOIST SEAT AT ELEVATOR
3/4" = 1'-0"

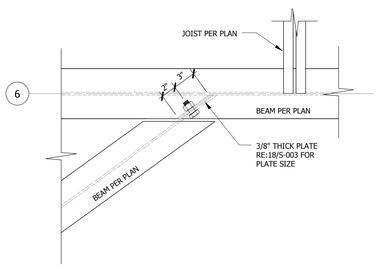

13 DIAGONAL BEAM TO BEAM CONN. DETAIL
1 1/2" = 1'-0"

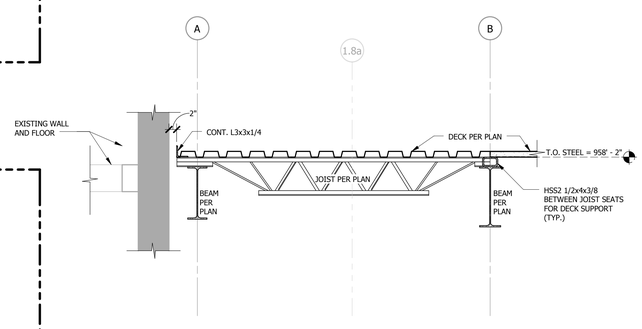

10 EXTENDED JOIST SEAT AT EXISTING BUILDING
3/4" = 1'-0"

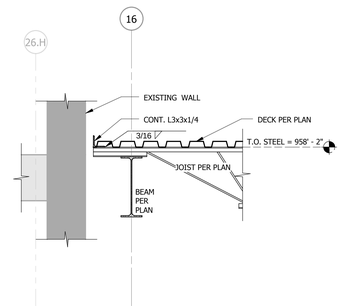

7 EXTENDED DECK EDGE PARALLEL TO SPAN DIRECTION
3/4" = 1'-0"

SECTIONS OMITTED FROM DEDUCT 4: 2,4,11,12,13,14 & 15/S-312 AND OMIT FROM ALL SUBSEQUENT DEDUCTS.

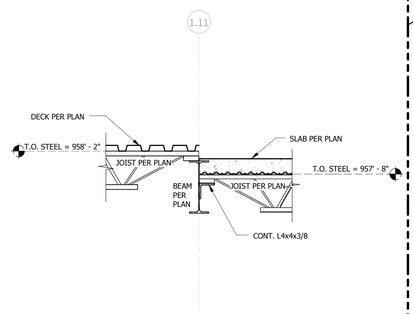

4 LOWER ROOF ACCESS DOOR OPENING SECTION
3/4" = 1'-0"

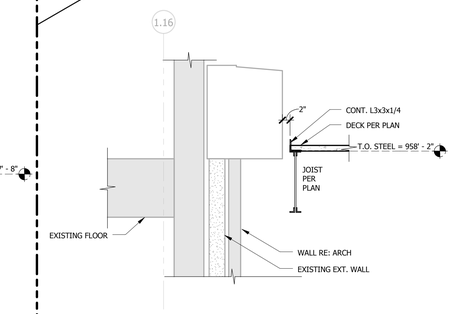

1 EXTENDED LOWER ROOF SECTION
3/4" = 1'-0"

No.	Description	Date

ENGINEERS & CONSULTANTS:

CIVIL
SK Design Group, Inc.
4600 College Blvd, Suite 100
Overland Park, KS 66211
913.451.1818

STRUCTURAL
Leigh & O'Kane
9201 Ward Parkway, Suite 301
Kansas City, MO 64114
816.444.3144

MECHANICAL, ELECTRICAL, PLUMBING, TELECOM, SECURITY
InSite Group, Inc.
1950 NW Copper Oaks Cr
Blue Springs, MO 64015
816.228.3377

FIRE PROTECTION & LIFE SAFETY
FSC, Inc.
9225 Indian Creek Pkwy, Ste 300
Overland Park, KS 66210
913.722.3473

ASBESTOS ABATEMENT
Terracon
13910 W 96th Terrace
Lenexa, KS 66215
913.492.7777

COMMISSIONING
Pro Balance, Inc.
5411 West 40 Highway
Blue Springs, MO 64015
816.228.7800

STATE OF MISSOURI
WAYNE NEEL HESS
NUMBER PE-2010019551
04/13/16
PROFESSIONAL ENGINEER

ARCHITECT:

WELLNER architects inc.
Wellner Architects, Inc.
802 Broadway Blvd, 4th Floor
Kansas City, MO 64105
816.221.0017

Drawing Title: FRAMING SECTIONS

Approved: Kathleen R. Fogarty, Medical Center Director

Project Title: CONSTRUCT OEF/OIF AND SPECIALTY CARE ADDITION

Location: 4801 LINWOOD BLVD, KANSAS CITY, MO 64128

Date: 30 March 2016 | Checked: WNH | Drawn: CMS

Project Number: 589-CA3-472

Building Number: 1

Drawing Number: S-312

Dwg. 51 of 188

Office of Construction and Facilities Management

Department of Veterans Affairs

4/13/2016 12:32:09 PM

VA FORM 08-6231

SOLICITATION FOR CONSTRUCTION PROPOSAL DOCUMENTS

SECTIONS OMITTED FROM DEDUCT 7: 2,12,13 &15/S-313 AND OMIT FROM ALL SUBSEQUENT DEDUCTS.

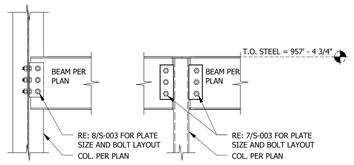

15 INTERIOR CURTAIN WALL SUPPORT
3/4" = 1'-0"

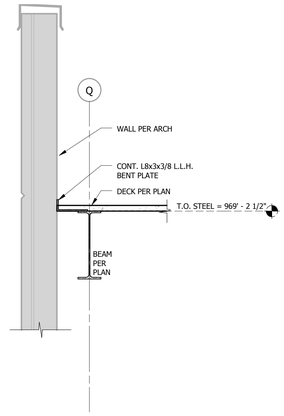

12 UPPER ROOF DECK FRAMING SECTION
3/4" = 1'-0"

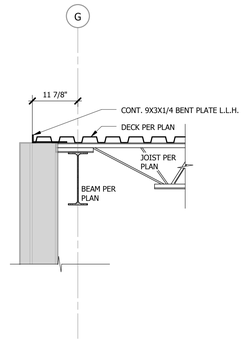

9 TYPICAL 3RD. FLR. WALKWAY ROOF FRAMING SECTION
3/4" = 1'-0"

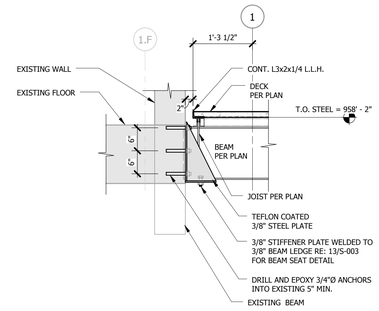

6 LOWER ROOF JOIST FRAMING INTO EXIST. BLDG.
3/4" = 1'-0"

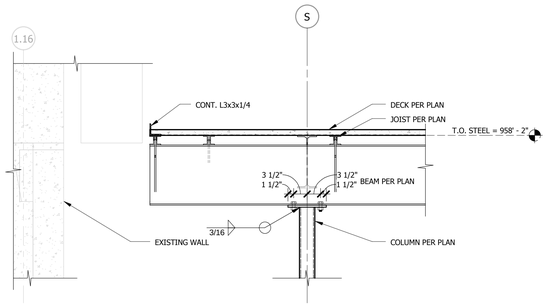

3 ROOF FRAMING AT CANTILEVER BEAM
3/4" = 1'-0"

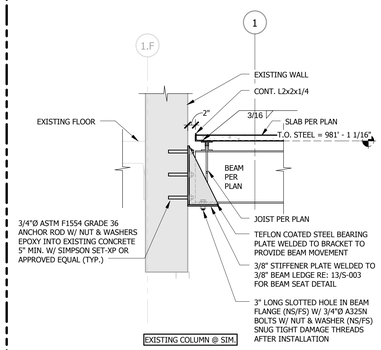

14 3RD. FLOOR WALKWAY ROOF TO EXISTING
3/4" = 1'-0"

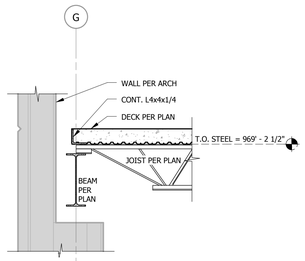

11 3RD. FLR. FRAMING SECTION
3/4" = 1'-0"

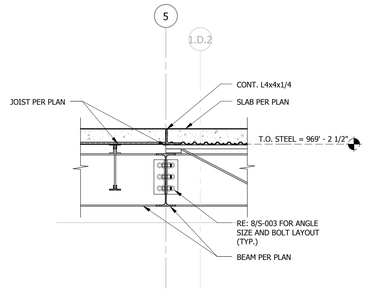

8 CHANGE IN DECK SPAN AT 3RD. FLR.
3/4" = 1'-0"

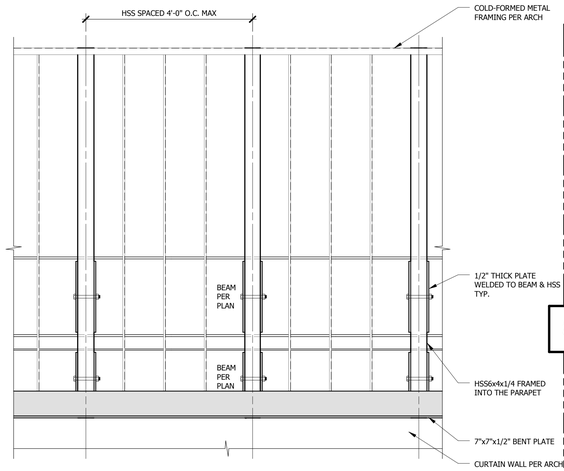

5 HSS INFILL BETWEEN METAL STUD WALL
3/4" = 1'-0"

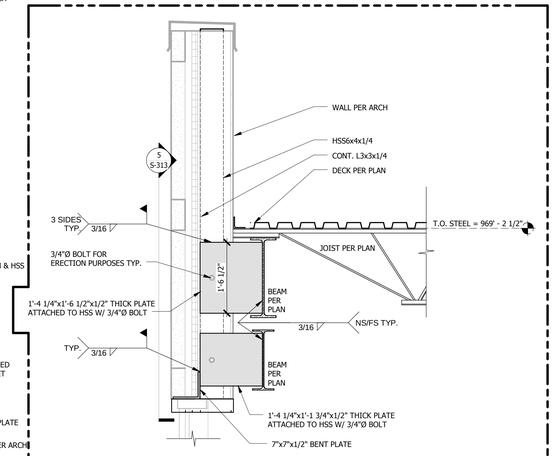

2 ROOF JOIST FRAMING SECTION
3/4" = 1'-0"

SECTIONS OMITTED FROM DEDUCT 7: 2,12,13 &15/S-313 AND OMIT FROM ALL SUBSEQUENT DEDUCTS.

SECTIONS OMITTED FROM DEDUCT 4: 1,4,7,8,9,10,11 & 14/S-313 AND OMIT FROM ALL SUBSEQUENT DEDUCTS.

SECTIONS OMITTED FROM DEDUCT 7: 2,12,13 &15/S-313 AND OMIT FROM ALL SUBSEQUENT DEDUCTS.

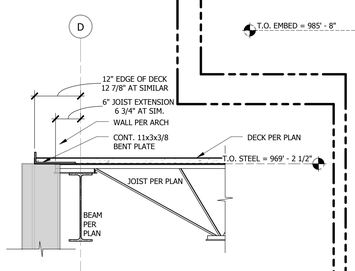

13 UPPER ROOF DECK ON JOIST FRAMING SECTION
3/4" = 1'-0"

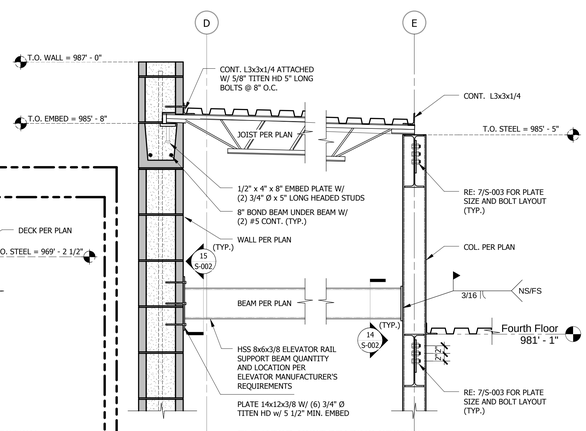

10 ELEVATOR JOIST BEARING SECTION
3/4" = 1'-0"

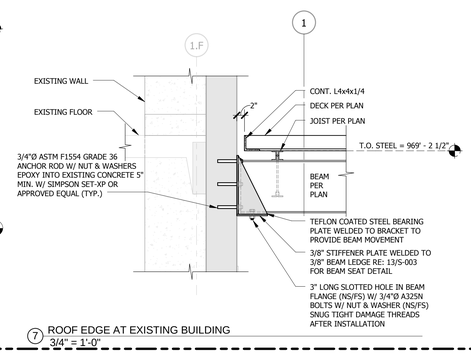

7 ROOF EDGE AT EXISTING BUILDING
3/4" = 1'-0"

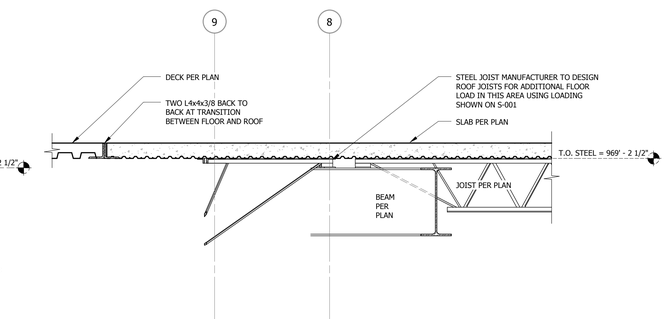

4 3RD. FLOOR JOIST CONNECTION AT ELEVATOR SECTION
3/4" = 1'-0"

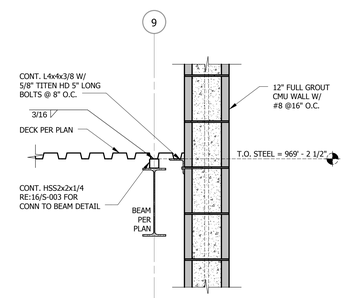

1 ROOF EDGE ALONG ELEVATOR SHAFT
3/4" = 1'-0"

No.	Description	Date

ENGINEERS & CONSULTANTS:

CIVIL
SK Design Group, Inc.
4600 College Blvd, Suite 100
Overland Park, KS 66211
913.451.1818

STRUCTURAL
Leigh & O'Kane
9201 Ward Parkway, Suite 301
Kansas City, MO 64114
816.444.3144

MECHANICAL, ELECTRICAL, PLUMBING, TELECOM, SECURITY
InSite Group, Inc.
1950 NW Copper Oaks Cr
Blue Springs, MO 64015
816.228.3377

FIRE PROTECTION & LIFE SAFETY
FSC, Inc.
9225 Indian Creek Pkwy, Ste 300
Overland Park, KS 66210
913.722.3473

ASBESTOS ABATEMENT
Terracon
13910 W 96th Terrace
Lenexa, KS 66215
913.492.7777

COMMISSIONING
pro balance
5411 West 40 Highway
Blue Springs, MO 64015
816.228.7800

STATE OF MISSOURI
WAYNE NEIL HESS
NUMBER PE-2010019551
04/13/16
PROFESSIONAL ENGINEER

ARCHITECT:

WELLNER architects inc.
Wellner Architects, Inc.
802 Broadway Blvd, 4th Floor
Kansas City, MO 64105
816.221.0017

Drawing Title: FRAMING SECTIONS

Approved: Kathleen R. Fogarty, Medical Center Director

Project Title: CONSTRUCT OEF/OIF AND SPECIALTY CARE ADDITION

Location: 4801 LINWOOD BLVD, KANSAS CITY, MO 64128

Date: 30 March 2016 | Checked: WNH | Drawn: CMS

Project Number: 589-CA3-472

Building Number: 1

Drawing Number: S-313

Dwg. 52 of 188

Office of Construction and Facilities Management

Department of Veterans Affairs

4/13/2016 12:32:13 PM

VA FORM 08-6231

SECTIONS OMITTED FROM DEDUCT 7: 1,3,4 & 6/S-314 AND OMIT FROM ALL SUBSEQUENT DEDUCTS.

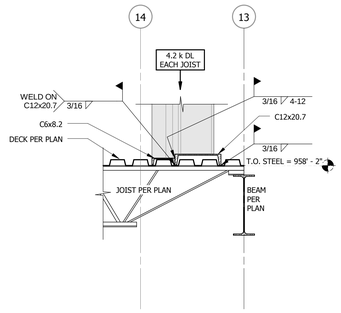

6 COLD FORMED WALL ON TOP OF DECK SECTION
3/4" = 1'-0"

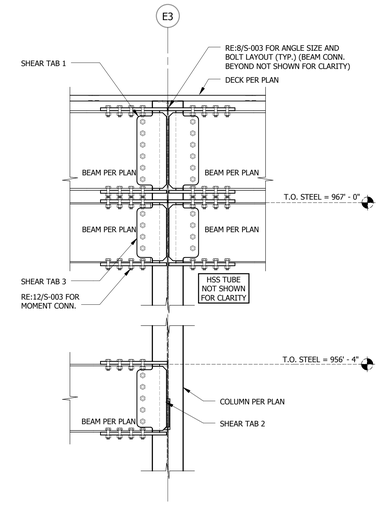

3 CURVED BEAM MOMENT FRAME CONNECTION
3/4" = 1'-0"

SECTIONS OMITTED FROM DEDUCT 4: 2, 5 & 8/S-314 AND OMIT FROM ALL SUBSEQUENT DEDUCTS.

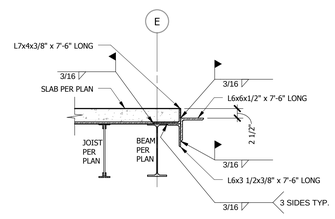

8 ELEVATOR SILL SECTION
3/4" = 1'-0"

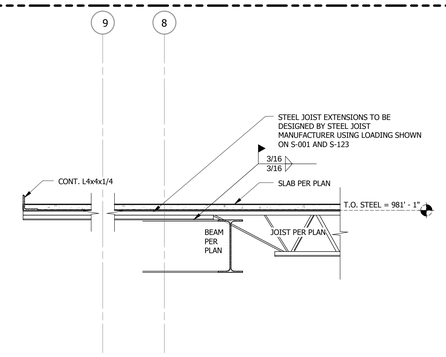

5 3RD. FLOOR ROOF SUPPORT SECTION
3/4" = 1'-0"

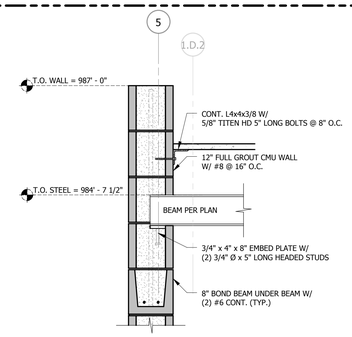

2 HOIST BEAM EMBED SECTION
3/4" = 1'-0"

SECTIONS OMITTED FROM DEDUCT 7: 1,3,4 & 6/S-314 AND OMIT FROM ALL SUBSEQUENT DEDUCTS.

SECTIONS OMITTED FROM DEDUCT 5: 7/S-314 AND OMIT FROM ALL SUBSEQUENT DEDUCTS.

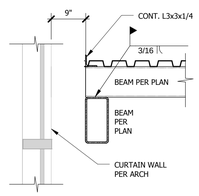

7 GAP AT CURTAIN WALL & VESTIBULE MEMBERS
3/4" = 1'-0"

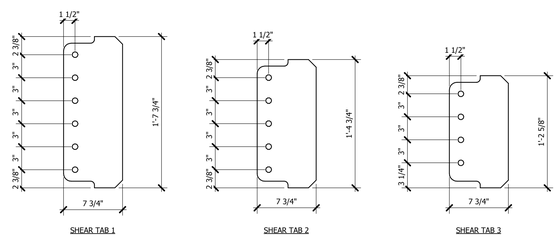

NOTE: ALL SHEAR TABS ARE 3/8" THICK W/ 3/4" HOLES.

4 SHEAR TAB DETAILS
1 1/2" = 1'-0"

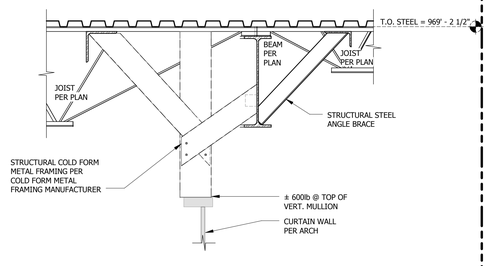

1 INTERIOR CURTAIN WALL CONN. SECTION
3/4" = 1'-0"

No.	Description	Date

ENGINEERS & CONSULTANTS:

CIVIL
SK Design Group, Inc.
Since 1969
SK Design Group, Inc.
4600 College Blvd, Suite 100
Overland Park, KS 66211
913.451.1818

STRUCTURAL
Leigh & O'Kane
Leigh & O'Kane
9201 Ward Parkway, Suite 301
Kansas City, MO 64114
816.444.3144

MECHANICAL, ELECTRICAL, PLUMBING, TELECOM, SECURITY
InSite Group, Inc.
Consulting Engineers
InSite Group, Inc.
1950 NW Copper Oaks Cr
Blue Springs, MO 64015
816.228.3377

FIRE PROTECTION & LIFE SAFETY
FSC, Inc.
Consulting Engineers
FSC, Inc.
9225 Indian Creek Pkwy, Ste 300
Overland Park, KS 66210
913.722.3473

ASBESTOS ABATEMENT
Terracon
Consulting Engineers and Scientists
Terracon
13910 W 96th Terrace
Lenexa, KS 66215
913.492.7777

COMMISSIONING
pb pro balance
Pro Balance, Inc.
5411 West 40 Highway
Blue Springs, MO 64015
816.228.7800

STATE OF MISSOURI
WAYNE NEEL HESS
NUMBER PE-2010019551
04/29/16
PROFESSIONAL ENGINEER

ARCHITECT:
WELLNER architects inc.
Wellner Architects, Inc.
802 Broadway Blvd, 4th Floor
Kansas City, MO 64105
816.221.0017

Drawing Title
FRAMING SECTIONS

Approved: Kathleen R. Fogarty, Medical Center Director

Project Title
CONSTRUCT OEF/OIF AND SPECIALTY CARE ADDITION

Location
4801 LINWOOD BLVD, KANSAS CITY, MO 64128

Date: 30 March 2016
Checked: WNH
Drawn: CMS

Project Number: 589-CA3-472
Building Number: 1
Drawing Number: S-314
Dwg. 53 of 188

Office of Construction and Facilities Management
Department of Veterans Affairs

4/13/2016 12:32:14 PM

VA FORM 08-6231

SOLICITATION FOR CONSTRUCTION PROPOSAL DOCUMENTS

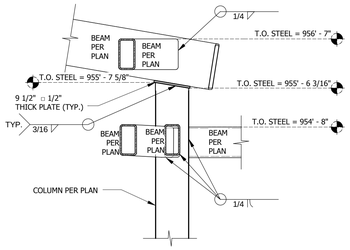

8 WALK-WAY ROOF MEMBERS @ DROP -OFF COL. SECTION
3/4" = 1'-0"

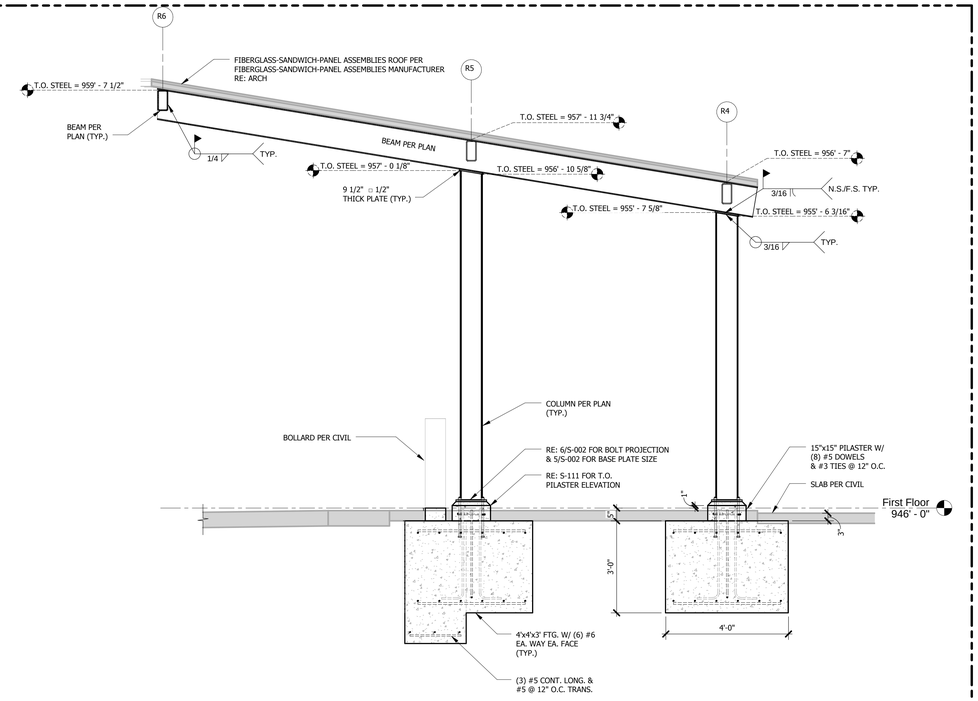

5 DRIVE CANOPY FRAMING SECTION
1/2" = 1'-0"

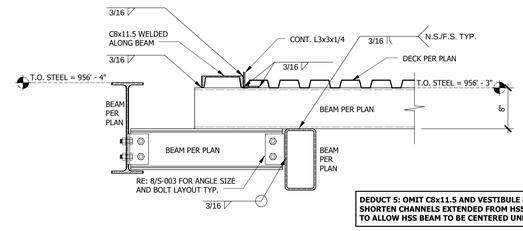

DEDUCT 5: OMIT C8x11.5 AND VESTIBULE FRAMING, SHORTEN CHANNELS EXTENDED FROM HSS TO WIDE FLANGE TO ALLOW HSS BEAM TO BE CENTERED UNDER STOREFRONT

3 INT. CURTAIN WALL ON VEST. FRAMING (SIM. @ DEDUCT 5)
1" = 1'-0"

SECTIONS OMITTED FROM DEDUCT 5: 2/S-315 AND OMIT FROM ALL SUBSEQUENT DEDUCTS.

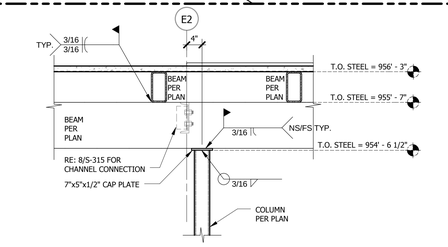

2 BEAM TO COLUMN AT VESTIBULE SECTION
3/4" = 1'-0"

SECTIONS OMITTED FROM DEDUCT 2: 1,4,5,6,7 & 8/S-315 AND OMIT FROM ALL SUBSEQUENT DEDUCTS.

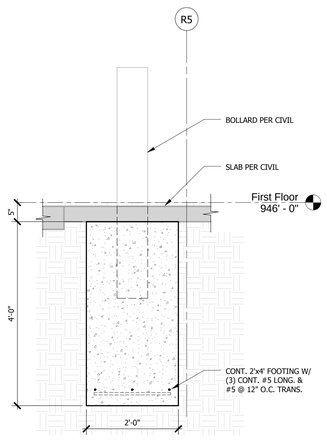

7 TYPICAL BOLLARD FOOTING SECTION
3/4" = 1'-0"

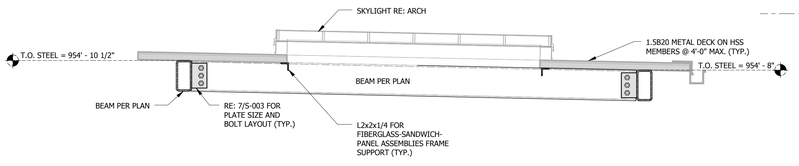

6 WALKWAY SKYLIGHT FRAMING SECTION
3/4" = 1'-0"

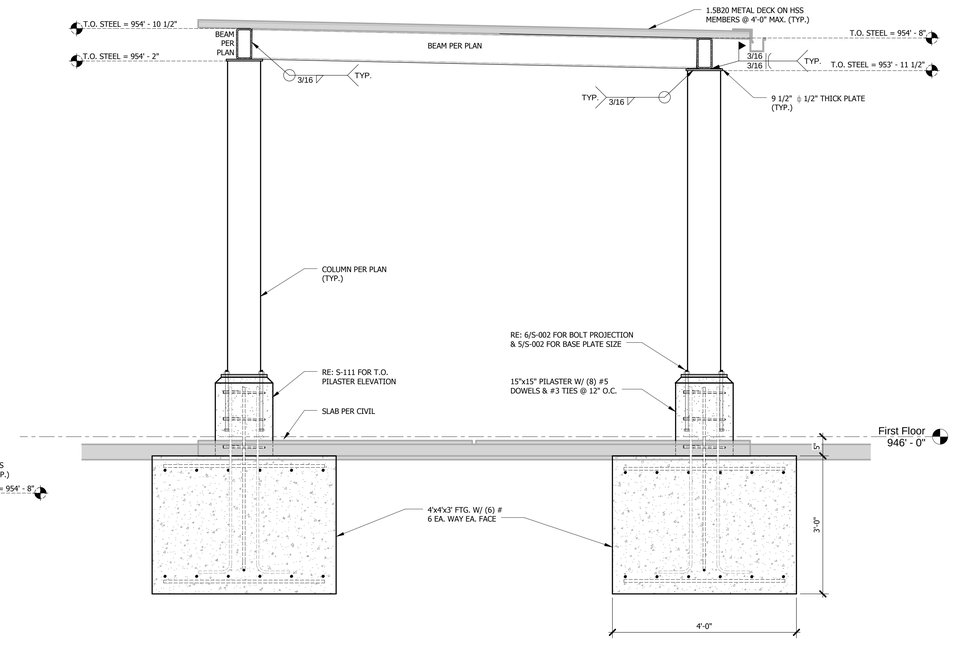

4 WALKWAY CANOPY FRAMING SECTION
3/4" = 1'-0"

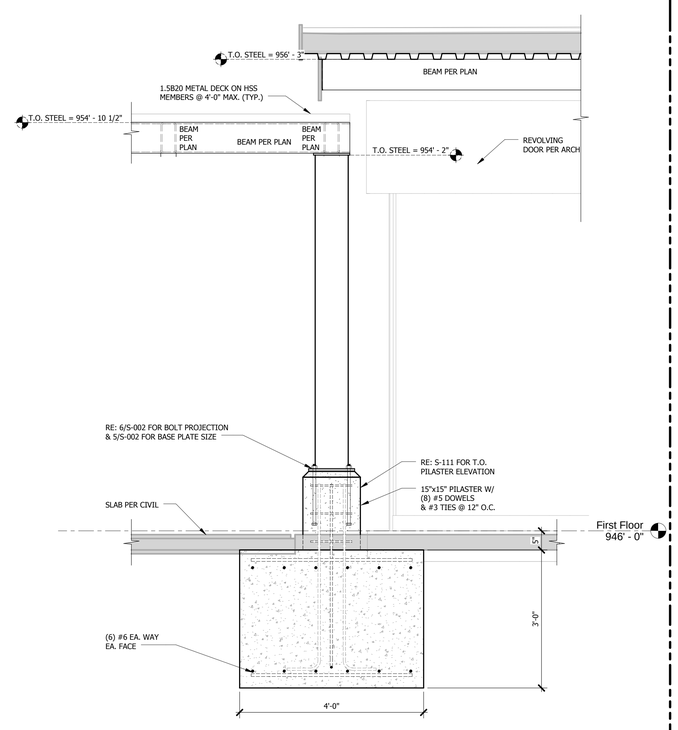

1 VESTIBULE AND WALKWAY CANOPY SECTION
3/4" = 1'-0"

No.	Description	Date

ENGINEERS & CONSULTANTS:

CIVIL
SK Design Group, Inc.
4600 College Blvd, Suite 100
Overland Park, KS 66211
913.451.1818

STRUCTURAL
Leigh & O'Kane
9201 Ward Parkway, Suite 301
Kansas City, MO 64114
816.444.3144

MECHANICAL, ELECTRICAL, PLUMBING, TELECOM, SECURITY
InSite Group, Inc.
1950 NW Copper Oaks Cr
Blue Springs, MO 64015
816.228.3377

FIRE PROTECTION & LIFE SAFETY
FSC, Inc.
9225 Indian Creek Pkwy, Ste 300
Overland Park, KS 66210
913.722.3473

ASBESTOS ABATEMENT
Terracon
13910 W 96th Terrace
Lenexa, KS 66215
913.492.7777

COMMISSIONING
Pro Balance, Inc.
5411 West 40 Highway
Blue Springs, MO 64015
816.228.7800

STATE OF MISSOURI WAYNE NEEL HESS NUMBER PE-2010019551 04/13/16 PROFESSIONAL ENGINEER

ARCHITECT:
WELLNER architects inc.
Wellner Architects, Inc.
802 Broadway Blvd, 4th Floor
Kansas City, MO 64105
816.221.0017

Drawing Title: CANOPY FRAMING SECTIONS

Approved: Kathleen R. Fogarty, Medical Center Director

Project Title: CONSTRUCT OEF/OIF AND SPECIALTY CARE ADDITION

Location: 4801 LINWOOD BLVD, KANSAS CITY, MO 64128

Date: 30 March 2016 | Checked: WNH | Drawn: CMS

Project Number: 589-CA3-472

Building Number: 1

Drawing Number: S-315

Dwg. 54 of 188

Office of Construction and Facilities Management

Department of Veterans Affairs

4/13/2016 12:32:17 PM

VA FORM 08-6231

SOLICITATION FOR CONSTRUCTION PROPOSAL DOCUMENTS

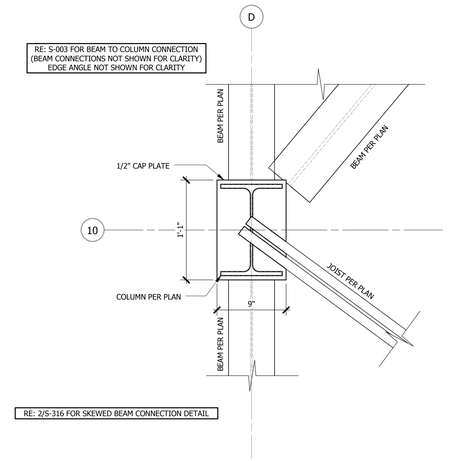

3 SKEWED JOIST CONN. ALONG GRID 10
1 1/2" = 1'-0"

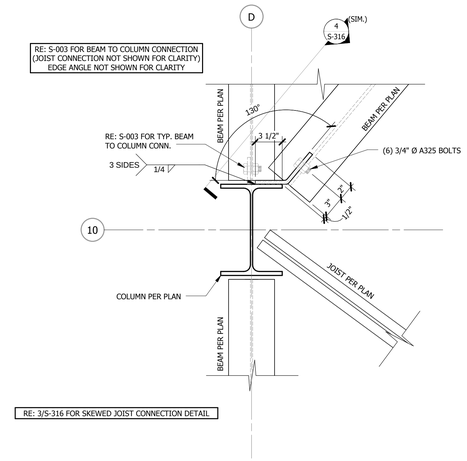

2 SKEWED BEAM CONN. ALONG GRID 10
1 1/2" = 1'-0"

SECTIONS OMITTED FROM DEDUCT 7: 1-4/S-316
AND OMIT FROM ALL SUBSEQUENT DEDUCTS.

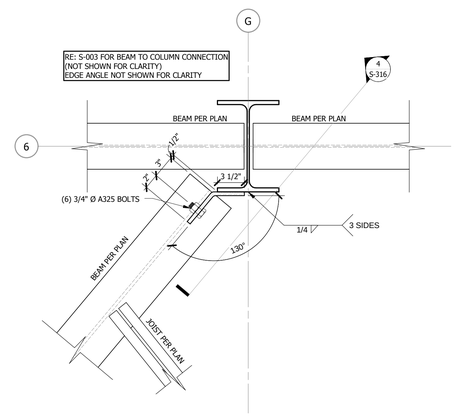

1 SKEWED BEAM CONN. ALONG GRID 6
1 1/2" = 1'-0"

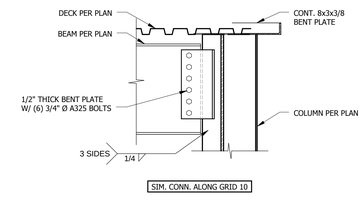

4 BEAM TO COLUMN CONN. SECTION ALONG GRID 6
3/4" = 1'-0"

No.	Description	Date

ENGINEERS & CONSULTANTS:

CIVIL	STRUCTURAL	MECHANICAL, ELECTRICAL, PLUMBING, TELECOM, SECURITY	FIRE PROTECTION & LIFE SAFETY	ASBESTOS ABATEMENT	COMMISSIONING
SK Design Group, Inc.	Leigh & O'Kane	InSite Group, Inc.	FSC, Inc.	Terracon	Pro Balance, Inc.
4600 College Blvd, Suite 100 Overland Park, KS 66211 913.451.1818	9201 Ward Parkway, Suite 301 Kansas City, MO 64114 816.444.3144	1950 NW Copper Oaks Cr Blue Springs, MO 64015 816.228.3377	9225 Indian Creek Pkwy, Ste 300 Overland Park, KS 66210 913.722.3473	13910 W 96th Terrace Lenexa, KS 66215 913.492.7777	5411 West 40 Highway Blue Springs, MO 64015 816.228.7800

STATE OF MISSOURI
WAYNE NEEL HESS
NUMBER PE-2010019551
04/13/16
PROFESSIONAL ENGINEER

ARCHITECT:

WELLNER architects inc.

Wellner Architects, Inc.
802 Broadway Blvd, 4th Floor
Kansas City, MO 64105
816.221.0017

Drawing Title: FRAMING SECTIONS

Approved: Kathleen R. Fogarty, Medical Center Director

Project Title: CONSTRUCT OEF/OIF AND SPECIALTY CARE ADDITION

Location: 4801 LINWOOD BLVD, KANSAS CITY, MO 64128

Date	Checked	Drawn
30 March 2016	WNH	CMS

Project Number: 589-CA3-472

Building Number: 1

Drawing Number: S-316

Dwg. 55 of 188

Office of Construction and Facilities Management

Department of Veterans Affairs

CONSTRUCTION DOCUMENTS 100% SUBMISSION

VA FORM 08-6231

4/13/2016 12:34:23 PM

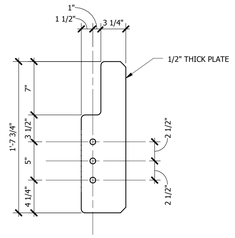

9 HSS8x4 BEAM TO WIDE FLANGE PLATE
1 1/2" = 1'-0"

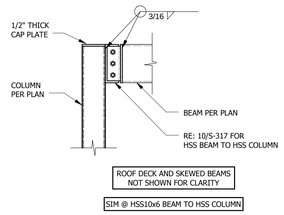

6 Section 25
3/4" = 1'-0"

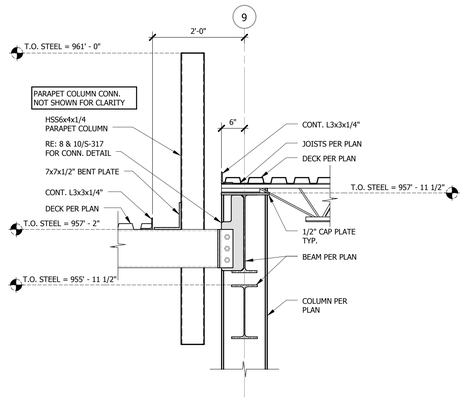

3 VESTIBULE ROOF FRAMING INTO BUILDING BEAM SECTION
3/4" = 1'-0"

THIS SHEET IS USED ONLY WITH DEDUCT 7 AND SUBSEQUENT DEDUCTS.

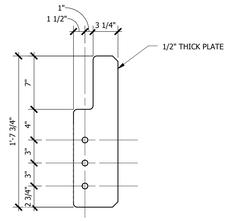

8 HSS10X6 BEAM TO WIDE FLANGE PLATE
1 1/2" = 1'-0"

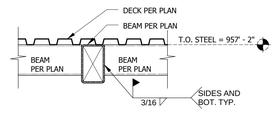

5 VESTIBULE ROOF FRAMING SECTION
3/4" = 1'-0"

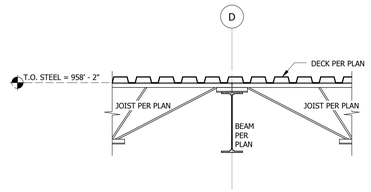

2 TYPICAL JOIST TO BEAM SECTION
3/4" = 1'-0"

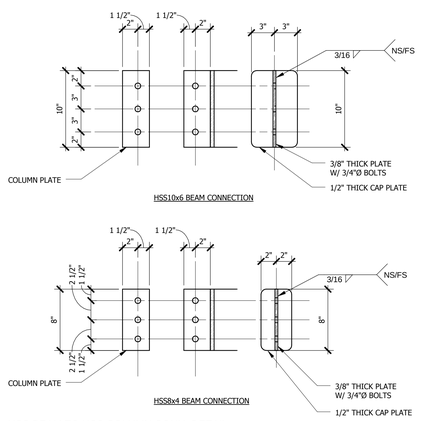

10 HSS BEAM TO HSS COLUMN CONN. DETAIL
1 1/2" = 1'-0"

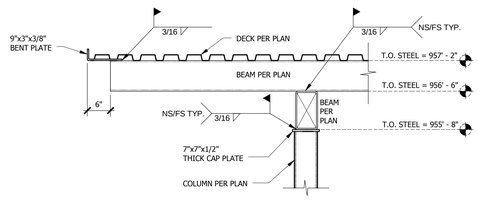

7 VESTIBULE ROOF EDGE CONDITION SECTION
3/4" = 1'-0"

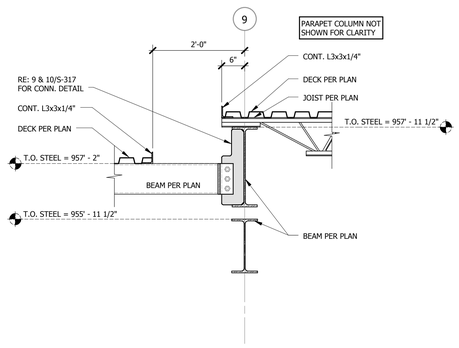

4 VESTIBULE ROOF FRAMING AT BUILDING BEAM
3/4" = 1'-0"

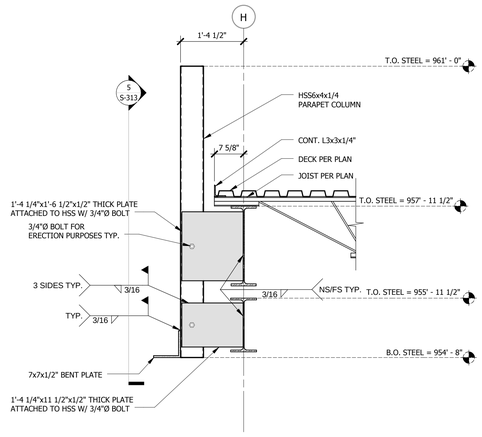

1 ROOF PARAPET CONN. SECTION
3/4" = 1'-0"

No.	Description	Date

ENGINEERS & CONSULTANTS:

CIVIL
SK Design Group, Inc.
4600 College Blvd, Suite 100
Overland Park, KS 66211
913.451.1818

STRUCTURAL
Leigh & O'Kane
9201 Ward Parkway, Suite 301
Kansas City, MO 64114
816.444.3144

MECHANICAL, ELECTRICAL, PLUMBING, TELECOM, SECURITY
InSite Group, Inc.
1950 NW Copper Oaks Cr
Blue Springs, MO 64015
816.228.3377

FIRE PROTECTION & LIFE SAFETY
FSC, Inc.
9225 Indian Creek Pkwy, Ste 300
Overland Park, KS 66210
913.722.3473

ASBESTOS ABATEMENT
Terracon
13910 W 96th Terrace
Lenexa, KS 66215
913.492.7777

COMMISSIONING
Pro Balance, Inc.
5411 West 40 Highway
Blue Springs, MO 64015
816.228.7800

STATE OF MISSOURI
WAYNE NEEL HESS
NUMBER PE-2010019551
PROFESSIONAL ENGINEER
04/13/16

ARCHITECT:

Wellner Architects, Inc.
802 Broadway Blvd, 4th Floor
Kansas City, MO 64105
816.221.0017

Drawing Title: FRAMING SECTIONS

Approved: Kathleen R. Fogarty, Medical Center Director

Project Title: CONSTRUCT OEF/OIF AND SPECIALTY CARE ADDITION

Location: 4801 LINWOOD BLVD, KANSAS CITY, MO 64128

Date: 30 March 2016 | Checked: WNH | Drawn: CMS

Project Number: 589-CA3-472

Building Number: 1

Drawing Number: S-317

Dwg. 56 of 188

Office of Construction and Facilities Management

Department of Veterans Affairs

4/13/2016 12:35:15 PM

VA FORM 08-6231

CONSTRUCTION DOCUMENTS 100% SUBMISSION