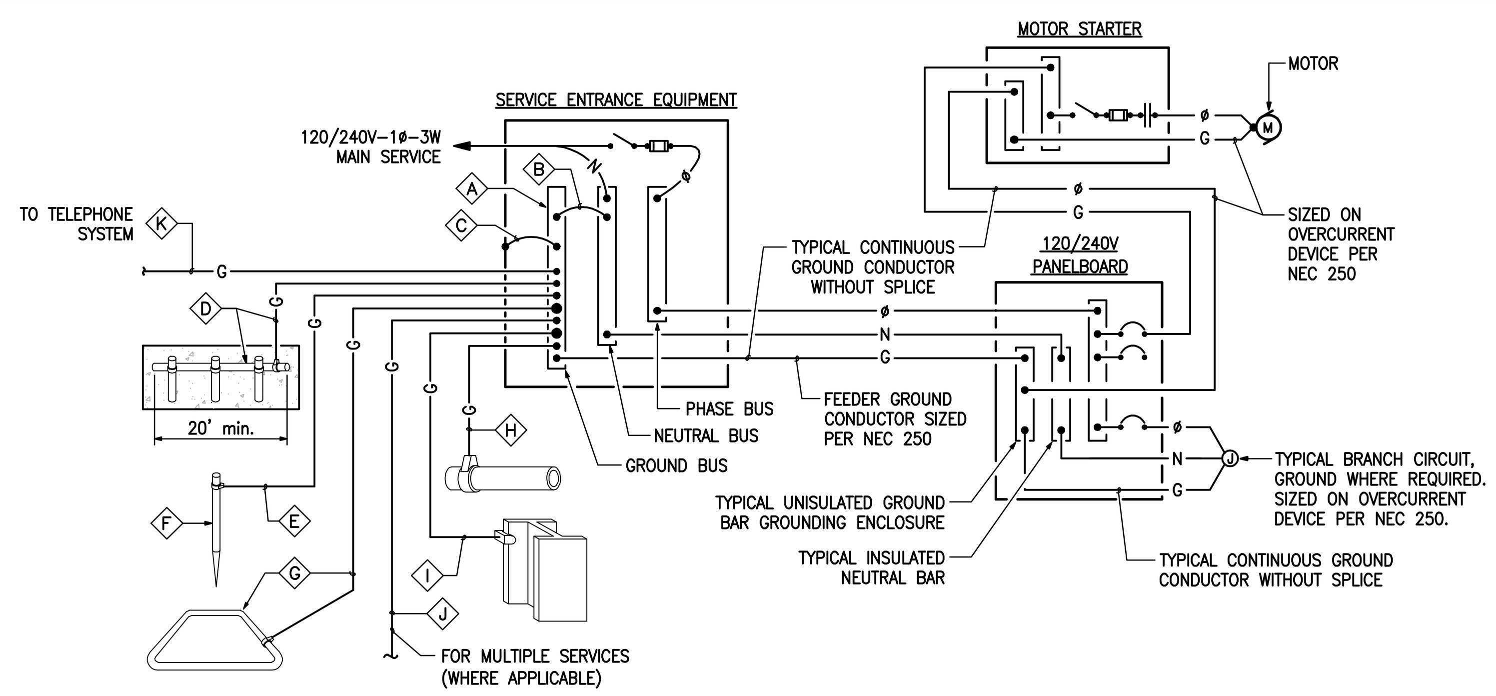

GROUNDING SYSTEM DIAGRAM

NOT TO SCALE

GROUNDING SYSTEM GENERAL NOTES

A. THE GROUNDING ELECTRODE SYSTEM SHALL CONSIST OF ITEMS ⟨A⟩ ⟨B⟩ ⟨C⟩ ⟨D⟩ ⟨E⟩ ⟨F⟩ AND ⟨G⟩, WHERE APPLICABLE.

B. ITEMS ⟨H⟩ ⟨I⟩ AND ⟨J⟩ MUST BE BONDED TOGETHER AND TO THE GROUNDING ELECTRODE SYSTEM WHEN THEY ARE PRESENT.

C. ITEM ⟨D⟩, CONCRETE ENCASED ELECTRODE (UFER) SHALL HAVE UFER SUPPORT CONSISTING OF 5/8" x 10' COPPER GROUND ROD CUT INTO 2' SECTIONS AND DRIVEN FOR SUPPORT OF UFER CONDUCTOR. ONLY COPPER TO COPPER CONNECTIONS ARE ACCEPTABLE. DO NOT USE RE-BAR FOR UFER SUPPORT. (THIS IS TO AVOID THE HARMFUL EFFECTS OF DISSIMILAR METALS IN CONTACT.) A U.L. LISTED COPPER TO RE-BAR CLAMP (SUCH AS GRAVES "JONES BOND" SYSTEM) IS AN APPROVED ALTERNATIVE.

D. THIS DETAIL IS PROVIDED IN ACCORDANCE WITH THE NATIONAL ELECTRICAL CODE, ARTICLE 250, PERTAINING TO THE "GROUNDING ELECTRODE SYSTEM".

E. ALL SPLICING SHALL BE ACCOMPLISHED VIA EXOTHERMIC WELD (CAD-WELD) ONLY.

F. ALL CONDUCTOR SIZING INDICATED ON THE GROUNDING SCHEDULE ARE FOR COPPER CONDUCTORS. ALUMINUM IS NOT PERMITTED.

G. ANY VARIANCES FROM THIS DIAGRAM AND ASSOCIATED SCHEDULE AND NOTES MUST BE REQUESTED AND APPROVED IN WRITING PRIOR TO INSTALLATION.

H. ALL INSTALLATIONS SHALL COMPLY WITH THE LATEST ADOPTED EDITION OF N.E.C. ARTICLE 250 (ALL SUBPARAGRAPHS) AND ALL STATE AND LOCAL REQUIREMENTS.

I. THE GROUNDING SYSTEM SHALL PROVIDE LESS THAN (4) FOUR OHMS RESISTANCE TO GROUND AT THE SERVICE CONNECTION. THE RESULTS SHALL BE VERIFIED BY AN INDEPENDENT TESTING AGENCY VIA GROUND TEST (FALL-OF-POTENTIAL) AND SUBMITTED TO ELECTRICAL ENGINEER UPON COMPLETION OF PROJECT.

GROUNDING SCHEDULE

	⟨A⟩ FACTORY INSTALLED GROUND BUS BAR	⟨B⟩ INTEGRATED BUS BAR MAIN BOND JUMPER	⟨C⟩ INTEGRATED BUS BAR CASE BOND JUMPER	⟨D⟩ CONCRETE ENCASED ELECTRODE (UFER)	⟨E⟩ GROUNDING ELECTRODE CONDUCTOR TO ROD, PIPE OR PLATE	⟨F⟩ CU or CU-CLAD STEEL GROUND ROD	⟨G⟩ COPPER GROUND RING CONDUCTOR	⟨H⟩ METALLIC PIPING BONDING CONDUCTOR	⟨I⟩ BUILDING STEEL BONDING CONDUCTOR	⟨J⟩ MULTIPLE SERVICE BONDING CONDUCTOR	⟨K⟩ TELEPHONE SYSTEM GROUNDING CONDUCTOR
CODE REFERENCE / AMPACITY		N.E.C. 250.102	N.E.C. 250.102	N.E.C. 250.50(c) 250.66(b)	N.E.C. 250.52(c) 250.52(d) 250.66(a)	N.E.C. 250.52(c)(2)	N.E.C. 250.50(d) 250.66(c)	N.E.C. 250.50(a) 250.66	N.E.C. 250.50(b) 250.66	N.E.C. 250.66	
200 AMP	SHALL BE SIZED TO ACCOMMODATE ALL GROUND WIRE LUGS AS INDICATED ON GROUNDING DIAGRAM AND/OR REFERENCED ELSEWHERE ON PLANS OR SPECIFICATIONS	#4	#4	#4	#6	5/8"x8'	#2	#4	#4	#4	#6
225 AMP		#2	#2	#4	#6	5/8"x8'	#2	#2	#2	#2	#6
400 AMP		#1/0	#1/0	#4	#6	5/8"x8'	#1/0	#1/0	#1/0	#1/0	#6
600 AMP		#2/0	#2/0	#4	#6	5/8"x8'	#2/0	#2/0	#2/0	#2/0	#6
800 AMP		#3/0	#3/0	#4	#6	5/8"x8'	#2/0	#2/0	#2/0	#2/0	#6
1000 AMP		#3/0	#3/0	#4	#6	5/8"x8'	#3/0	#3/0	#3/0	#3/0	#6
1200 AMP		250kcMIL	250kcMIL	#4	#6	5/8"x8'	#3/0	#3/0	#3/0	#3/0	#6
1600 AMP		350kcMIL	350kcMIL	#4	#6	5/8"x8'	#3/0	#3/0	#3/0	#3/0	#6
2000 AMP		400kcMIL	400kcMIL	#4	#6	5/8"x8'	#3/0	#3/0	#3/0	#3/0	#6
2500 AMP		500kcMIL	500kcMIL	#4	#6	5/8"x8'	#3/0	#3/0	#3/0	#3/0	#6
3000 AMP		500kcMIL	500kcMIL	#4	#6	5/8"x8'	#3/0	#3/0	#3/0	#3/0	#6

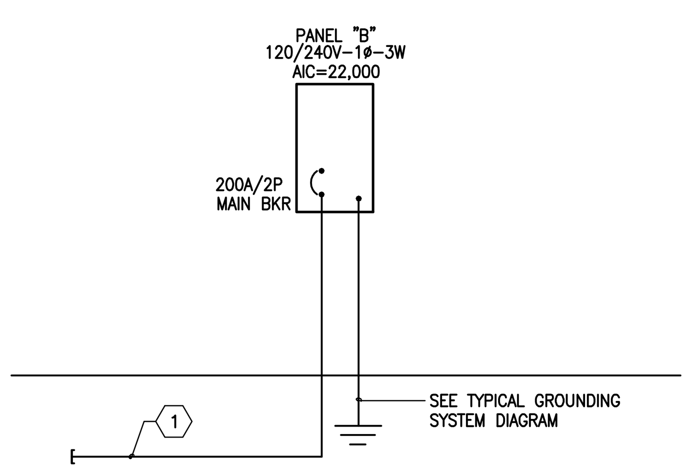

POWER RISER DIAGRAM

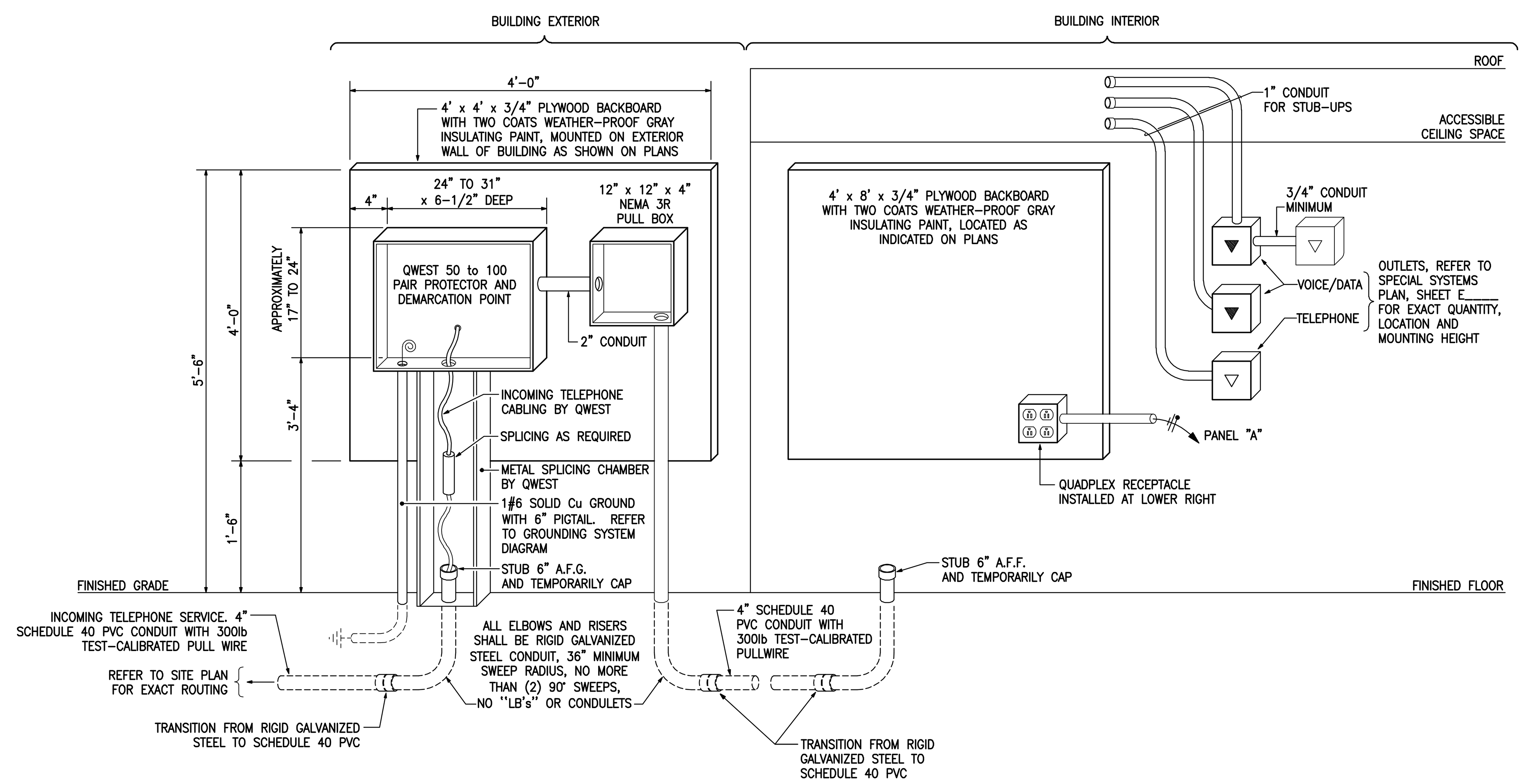

TELEPHONE SYSTEM RISER DIAGRAM

LIGHT FIXTURE SCHEDULE

TYPE	FIXTURE DESCRIPTION	LAMPS	MOUNTING
A	COMMERCIAL WIDE FLUORESCENT STRIPLITE, 120V, ELECTRONIC BALLAST, WIRE GUARD METALUX #SS-132-120V-EB81-WG	(1)32W T8 3500°K	SURFACE
B	4'-0" RECESSED FLUORESCENT, FLANGED TRIM, 120V, ELECTRONIC BALLAST, 1/2" x 1/2" x 1/2" WHITE EGGCRATE LOUVER METALUX #FC-132-xxx-120-EB81	(1)32W T8 3500°K	RECESSED
C	2'-0" RECESSED FLUORESCENT, FLANGED TRIM, 120V, ELECTRONIC BALLAST, 1/2" x 1/2" x 1/2" WHITE EGGCRATE LOUVER METAXLUX #FC-217-xxx-120-EB81	(2)17W T8 3500°K	RECESSED
D	SUSPENDED DIRECT/INDIRECT FLUORESCENT, CROSS BLADE LOUVER, 4' TOTAL LENGTH, HIGH EFFICIENCY ELECTRONIC BALLAST, 120V, ELECTRONIC BALLAST CORELITE #VB-SB-2T8-1C-120-PPXX-JB-4	(2)32W T8 3500°K	CEILING SURFACE
F	6" RECESSED CAN, COMPACT FLUORESCENT, ELECTRONIC BALLAST, SELF FLANGED PORTFOLIO #C6042E-6051LI	(1)42W TTT CFL	RECESSED
G	6" RECESSED CAN, COMPACT FLUORESCENT, ELECTRONIC BALLAST, SELF FLANGED PORTFOLIO #C6042E-6051LI	(1)32W TTT CFL	RECESSED
H	6" RECESSED CAN, COMPACT FLUORESCENT, ELECTRONIC BALLAST, SELF FLANGED, CLEAR POLYCARBONATE LENS PORTFOLIO #C6042E-60813	(1)42W TTT CFL	RECESSED
He	6" RECESSED CAN, COMPACT FLUORESCENT, ELECTRONIC BALLAST, SELF FLANGED, CLEAR POLYCARBONATE LENS, INTERNAL TEST SWITCH/INDICATOR LIGHT AND 90 MINUTE EMERGENCY BATTERY BACKUP PORTFOLIO #C6042E-60813-IEM	(1)42W TTT CFL	RECESSED
K	WALL MOUNTED EXTERIOR LIGHT FIXTURE, FULL CUTOFF DARK SKY COMPLIANT, CLEAR TEMPERED IMPACT RESISTANT LENS, COMPACT FLUORESCENT, ELECTRONIC BALLAST McGRAW-EDISON #IST-42-CF-120-2S-BZ	(1)42W TTT CFL	WALL
Ke	WALL MOUNTED EXTERIOR LIGHT FIXTURE, FULL CUTOFF DARK SKY COMPLIANT, CLEAR TEMPERED IMPACT RESISTANT LENS, COMPACT FLUORESCENT, COLD WEATHER EMERGENCY BATTERY BACKUP McGRAW-EDISON #IST-42-CF-120-2S-BZ-EMI40-120	(1)42W TTT CFL	WALL
M	INDUSTRIAL STRIP LIGHT, DUAL HIGH EFFICIENCY ELECTRONIC BALLASTS FOR BI-LEVEL LIGHTING, UNIVERSAL VOLTAGE METALUX #STM-232-UNV-EB82	(2)32W T8 3500°	CHAIN HUNG
N	INDUSTRIAL STRIP LIGHT, DUAL HIGH EFFICIENCY ELECTRONIC BALLASTS FOR BI-LEVEL LIGHTING, UNIVERSAL VOLTAGE METALUX #STM-332-UNV-EB82	(3)32W T8 3500°	CHAIN HUNG
X	EXIT LIGHT WITH EMERGENCY BATTERY BACKUP, RED LETTERS, WHITE HOUSING, SELF DIAGNOSTIC SURE-LITES #CX7170-R-W-SD	WITH UNIT	UNIVERSAL
EM	EMERGENCY LIGHTING WITH EMERGENCY BATTERY BACKUP SURE-LITES #CC7-MRT	WITH UNIT	UNIVERSAL

PANEL: "B" VOLTAGE: 120/240V-1Ø-3W MAINS: 200A AIC: 22,000
SOURCE: . SKIRTS: NONE FEED: BOTTOM MAIN BREAKER: 200A/2P MOUNTING: RECESSED

DESCRIPTION	BREAKER	LOAD (VA)	CCT NO.	LOAD (VA) ØA	LOAD (VA) ØB	CCT NO.	LOAD (VA)	BREAKER	DESCRIPTION
EXTERIOR LIGHTING	20A/1P	825	1	1025		2	200	20A/1P	SECURITY PANEL
LIGHTING	20A/1P	911	3		1011	4	100	20A/1P	TIMECLOCK
RECEPTACLES	20A/1P	360	5	1080		6	720	20A/1P	RECEPTACLES
RECEPTACLES	20A/1P	1080	7		1980	8	900	20A/1P	RECEPTACLES
SPARE	20A/1P	·	9	100		10	100	20A/1P	FIRE/SMOKE DAMPER
UNIT HEATERS	20A/1P	1332	11		1682	12	350	20A/1P	EXHAUST FANS
ROLLUP DOOR	20A/1P	1176	13	1876		14	700	20A/1P	EXHAUST FANS
SPARE	20A/1P	·	15		.	16	·	20A/1P	SPARE
WELDER	50A	4620	17	4620		18	·	20A/1P	SPARE
	2P	4620	19		4620	20	·	20A/1P	SPARE
WELDER	50A	4620	21	4620		22	·	20A/1P	SPARE
	2P	4620	23		4620	24	·	20A/1P	SPARE
SPARE	20A/1P	·	25	.		26	·	20A/1P	SPARE
SPACE ONLY	1P	·	27		.	28	·	1P	SPACE ONLY
SPACE ONLY	1P	·	29	.		30	·	1P	SPACE ONLY
SPACE ONLY	1P	·	31		.	32	·	1P	SPACE ONLY
SPACE ONLY	1P	·	33	.		34	·	1P	SPACE ONLY
SPACE ONLY	1P	·	35		.	36	·	1P	SPACE ONLY
SPACE ONLY	1P	·	37	.		38	·	1P	SPACE ONLY
IWH-1	25A	2400	39		2400	40	·	1P	SPACE ONLY
	2P	2400	41	2400		42	·	1P	SPACE ONLY
			TOTAL LOAD (VA)	15621	16313				

TOTAL CONNECTED (KVA): 31.9 ESTIMATED DEMAND (KVA): 32.6 DOOR-IN-DOOR GROUND BUS

LOAD SUMMARY-PANEL -

DESCRIPTION	
PANELBOARD "B" ESTIMATED DEMAND PER NEC 220	
MECHANICAL UNITS (2.4 KVA CONN)	
LARGEST AT 125% (1.3 KVA)	1.6 KVA
REMAINING AT 100% (1.1 KVA)	1.1 KVA
RECEPTACLES (3.1 KVA CONN)	
FIRST 10 KVA AT 100%	3.1 KVA
REMAINING AT 50%	0.0 KVA
LIGHTING (1.7 KVA CONN) AT 125% (CONTINUOUS LOAD)	2.2 KVA
EQUIPMENT (24.6 KVA CONN) AT 100%	24.6 KVA
TOTAL ESTIMATED LOAD:	32.6 KVA
135.8 AMPERES AT 120/240V-1Ø-3W	
∴ MINIMUM RECOMMENDED SERVICE SIZE =	200 AMPS

GENERAL SHEET NOTES

1. REFER TO PNM STANDARDS AND DRAWINGS FOR ADDITIONAL INFORMATION.

KEYED NOTES

1. STUB OUT 2" CONDUIT 5'-0" MINIMUM FROM BUILDING EXTERIOR WALL FOR FUTURE CONNECTIONS.

IN THE EVENT THAT BONES OR HISTORIC ARCHEOLOGICAL MATERIAL ARE UNCOVERED DURING CONSTRUCTION OR EARTH DISTURBING ACTIVITIES, CEASE WORK IMMEDIATELY AND PROTECT THE REMAINS FROM FURTHER DISTURBANCE. NOTIFY THE OWNER, THE DIRECTOR OF FORT BLISS NATIONAL CEMETERY AT AT 915-564-0201. THE OWNER WILL CONTACT THE NEW MEXICO HISTORIC PRESERVATION DIVISION (SHPO). THE OWNER AND SHPO MAY DISCUSS THE APPROPRIATE WAY TO PROCEED. DIRECTION TO THE CONTRACTOR WILL BE PROVIDED BY THE OWNER.

100% CONSTRUCTION DRAWINGS

Revisions: | Date

SUB-CONSULTANTS

MORROW REARDON WILKINSON MILLER, LTD., LANDSCAPE ARCHITECTS
210 La Veta NE, Albuquerque, NM 87108
505.268.2266 FAX 505.265.9637
mrw@mrwnm.com

CHERRY/SEE/REAMES ARCHITECTS, LLP
220 GOLD AVENUE SW ALBUQUERQUE, NM 87102
505-842-1278 FAX 505-766-9269

THE RESPONSE GROUP, INC.
An Electrical/Mechanical Engineering Corporation

DARRYL D. RUEHLE, NEW MEXICO, 6729, REGISTERED PROFESSIONAL ENGINEER
11-18-11
10182

PRIME CONSULTANT
URS
2020 K STREET, SUITE 300
WASHINGTON, DC 20006
TELEPHONE: (202)872-0277
FAX: (202)872-0282.

Drawing Title: STORAGE BUILDING ELECTRICAL PANEL SCHEDULE, RISER DIAGRAM, AND DETAILS

Approved: Director Office of Construction Management

Project Title: CEMETERY IMPROVEMENTS AND NEW MAINTENANCE BUILDING

Location: FORT BAYARD, NEW MEXICO

Date: NOVEMBER 18, 2011 | Checked: DDR | Drawn: TFR

Project Number: 885CM3007

Building Number: BLDG #2

Drawing Number: E-611

Dwg. 111 of 120

NATIONAL CEMETERY ADMINISTRATION OFFICE OF DESIGN AND CONSTRUCTION

Department of Veterans Affairs

VA FORM 08-6231, OCT 1978