PLANTING & IRRIGATION DETAILS

A SWALE

KEYNOTES:
1. SIDEWALK

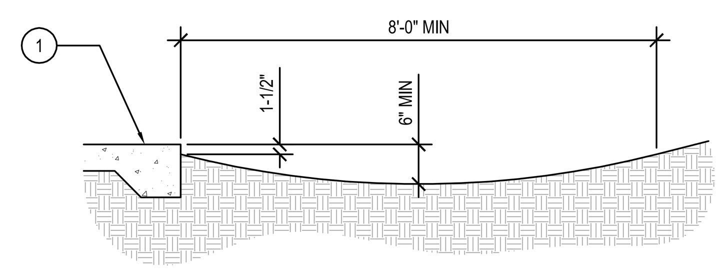

NOTES:
1. SWALE ADJACENT TO CURB OR SIDEWALK FOR LANDSCAPE IRRIGATION WATER CONTROL.

NOT TO SCALE

B TREE PLANTING

KEYNOTES:
1. 2 STRAND TWISTED 12 GA. GALV. WIRE ENCASED IN 1/2" DIA. RUBBER HOSE
2. (2) HARDWOOD TREE (LENGTH AS REQ'D) STAKES DRIVEN OUTSIDE ROOTBALL INTO SUBGRADE (18" MIN.) PRIOR TO BACKFILLING TIE TO FIRST BRANCHES & AS NECESSARY FOR FIRM SUPPORT.
3. BACKFILL W/ SPECIFIED SOIL MIX. WATER & TAMP TO REMOVE AIR POCKETS REFER TO SPECS.
4. SUBSOIL
5. PLANT TABS PER SPECS.
6. SCARIFY SIDES OF PLANTING HOLE TO PREVENT GLAZING
7. DECOMPOSED GRANITE AT MIN. 2" DEPTH. COLOR AND SIZE NOTED ON SHEET L-1. NO DECOMPOSED GRANITE TO BE USED IN TURF AREAS.
8. FINISH GRADE

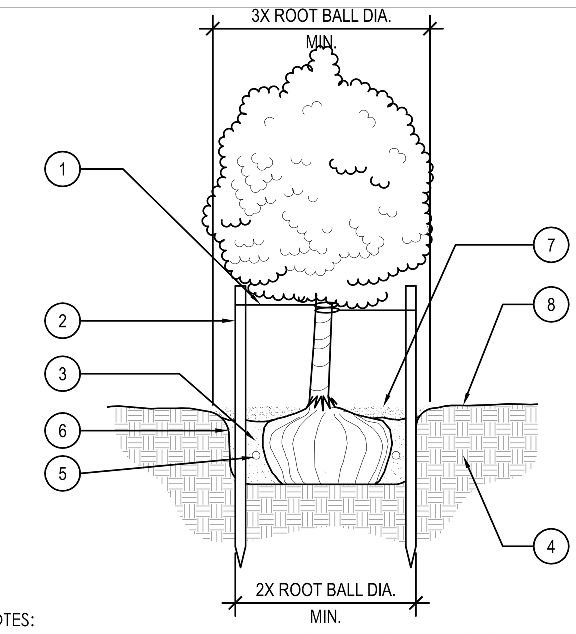

NOTES:
1. FOR MULTI-TRUNK TREES - TIE AT LEAST 2 LARGEST TRUNKS TO AT LEAST ONE STAKE.
2. 8" HIGH ARBOR GUARD TO BE PLACED AROUND TRUNK OF TREES LOCATED IN TURF AREAS.
3. TOP OF ROOT BALL AND WELL TO BE 4" BELOW FINISH GRADE.
4. PAINT CUTS OVER 1" DIA.
5. WIRE SHALL NOT TOUCH OR RUB ADJACENT TRUNKS OR BRANCHES.
6. TREE TRUNK GUARDS REQUIRED FOR TREES WITHIN TURF.

NOT TO SCALE

C SHRUB PLANTING

KEYNOTES:
1. TOP OF ROOT BALL AND WELL TO BE 2" BELOW SAUCER
2. DECOMPOSED GRANITE AT MIN. 2" DEPTH. COLOR AND SIZE NOTED ON SHEET L-1.
3. FINISH GRADE
4. BACKFILL W/ SPECIFIED SOIL MIX. WATER & TAMP TO REMOVE AIR POCKETS REFER TO SPECS.
5. SCARIFY SIDES OF PLANT PIT
6. PLANT TABS PER SPECS.
7. SUBSOIL

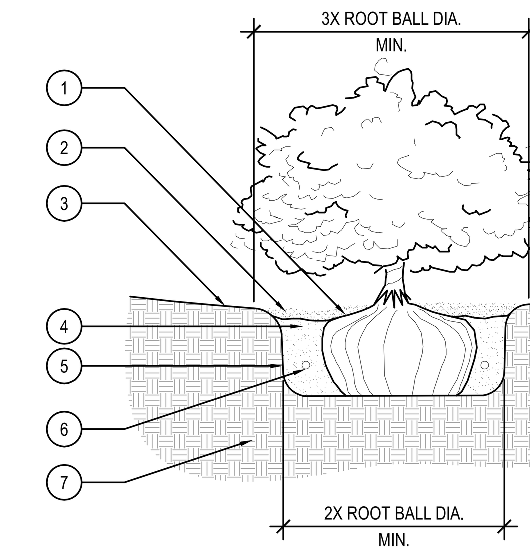

NOT TO SCALE

D MULTI-TRUNK TREE STAKING

KEYNOTES:
1. 2 STRAND TWISTED 12 GA. GALV. WIRE ENCASED IN 1/2" DIA. RUBBER HOSE MIN. 2 WIRE SUPPORTS SHALL BE ON MAIN BRANCHING STRUCTURE
2. 2 HARDWOOD TREE (LENGTH AS REQ'D) STAKES DRIVEN OUTSIDE ROOTBALL INTO SUBGRADE (18" MIN.) PRIOR TO BACKFILLING TIE TO FIRST BRANCHES & AS NECESSARY FOR FIRM SUPPORT.
3. BACKFILL W/ SPECIFIED SOIL MIX. WATER & TAMP TO REMOVE AIR POCKETS REFER TO SPECS.
4. PLANT TABS PER SPECS.
5. SCARIFY SIDES OF PLANTING HOLE TO PREVENT GLAZING
6. SUBSOIL
7. DECOMPOSED GRANITE AT MIN. 2" DEPTH. COLOR AND SIZE NOTED ON SHEET L-1. NO DECOMPOSED GRANITE TO BE USED IN TURF AREAS.
8. FINISH GRADE

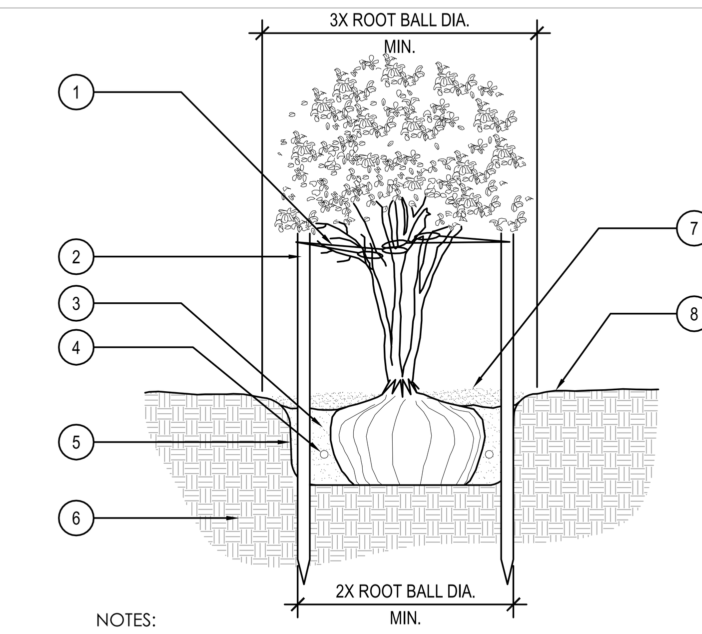

NOTES:
1. FOR MULTI-TRUNK TREES - TIE AT LEAST 2 LARGEST TRUNKS TO AT
2. LEAST ONE STAKE.
3. 8" HIGH ARBOR GUARD TO BE PLACED AROUND TRUNK OF TREES LOCATED
4. IN TURF AREAS.
5. TOP OF ROOT BALL AND WELL TO BE 4" BELOW FINISH GRADE.
6. PAINT CUTS OVER 1" DIA.
7. WIRE SHALL NOT TOUCH OR RUB ADJACENT TRUNKS OR BRANCHES.
8. TREE TRUNK GUARDS REQUIRED FOR TREES WITHIN TURF.

NOT TO SCALE

E DECOMPOSED GRANITE

KEYNOTES:
1. DECOMPOSED GRANITE
2. FINISHED GRADE
3. APPROVED PRE-EMERGENT
4. FINISH SUB-GRADE OF COMPACTED SOIL

NOTES:
1. SEE SHEET L-1 FOR SIZE AND COLOR OF DECOMPOSED GRANITE.
2. PRE-EMERGENT SHALL BE APPLIED TO FINISH SUB-GRADE BEFORE INSTALLATION OF DECOMPOSED GRANITE AND TO TOP OF DECOMPOSED GRANITE AFTER INSTALLATION.

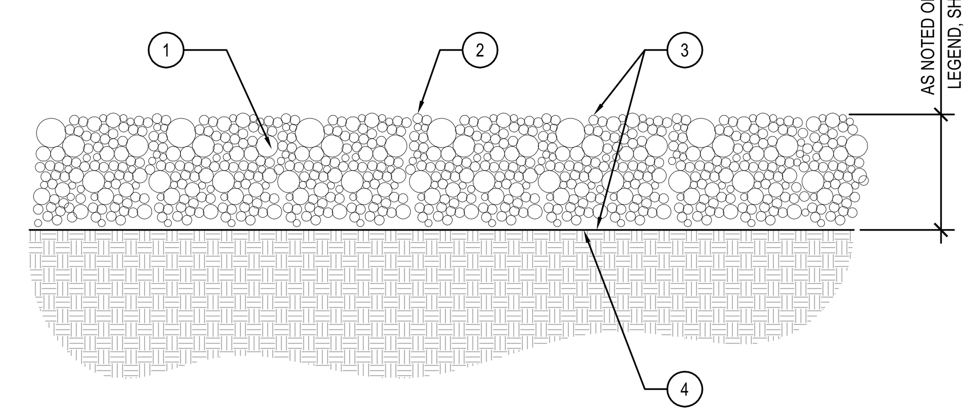

NOT TO SCALE

F TRENCHING

KEYNOTES:
1. FINISH GRADE
2. BACKFILL, CLEAN AND ROCK FREE
3. DRIP TUBING
4. LATERAL LINE
5. NATIVE SOIL
6. BEDDING PER SPECS
7. MAINLINE PIPE
8. CONTROL VALVE WIRING, TAPED AT 10'-0" INTERVALS
9. TIE A LOOSE 24" LOOP IN ALL WIRING AT CHANGES OF DIRECTION GREATER THAN 30° UNTIE ALL LOOPS AFTER ALL CONNECTIONS HAVE BEEN MADE
10. TRENCH

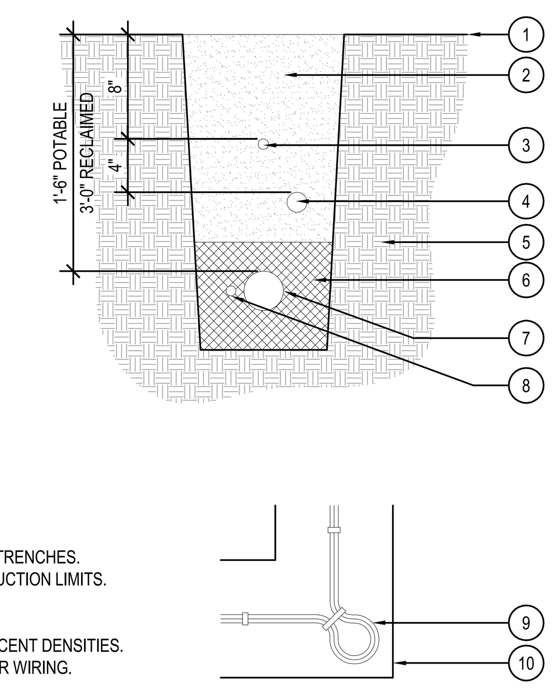

NOTES:
1. PLACE POTABLE AND RECLAIMED IRRIGATION LINES IN SEPARATE TRENCHES.
2. PLACE ALL PIPE IN LANDSCAPE AREAS WITHIN SPECIFIED CONSTRUCTION LIMITS.
3. ALL WIRING TO BE INSTALLED PER LOCAL CODE.
4. ALL PLASTIC PIPING TO BE SNAKED IN TRENCHES.
5. ALL TRENCHES TO BE THOROUGHLY COMPACTED TO MATCH ADJACENT DENSITIES.
6. MAINTAIN 4" MIN. HORIZONTAL CLEARANCE BETWEEN PIPES AND/OR WIRING.

NOT TO SCALE

G WALL MOUNTED CONTROLLER

KEYNOTES:
1. WALL, REFER TO PLANS FOR CONSTRUCTION TYPE
2. IRRIGATION CONTROLLER, PER IRRIGATION MATERIAL SCHEDULE
3. JUNCTION BOX W/ ENCLOSED MINI ON-OFF SWITCH FOR 120-VOLT WIRING & COVER PLATE
4. ELECTRICAL CONDUIT 120-VOLT WIRING PER ALL CODES
5. PVC CONDUIT FOR CONTROL VALVE WIRING. PAINT EXPOSED ELECTRICAL CONDUITS CONNECTED TO WALL MOUNTED IRRIGATION CONTROLLER TO MATCH PREDOMINANT COLOR OF BUILDING
6. FINISH GRADE

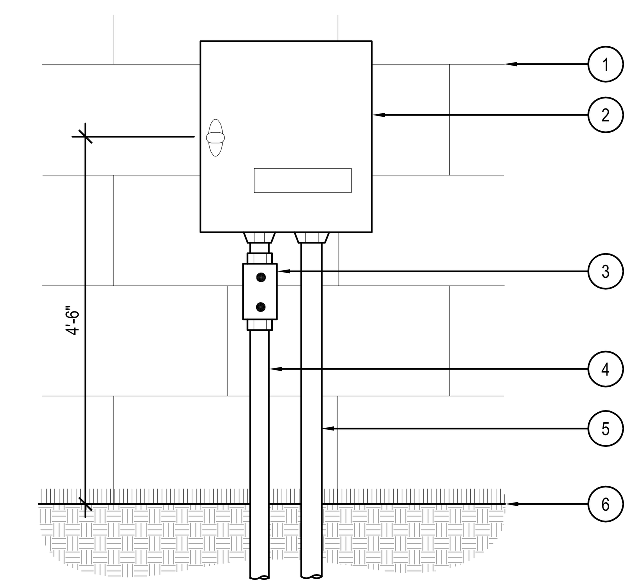

NOTES:
1. MOUNT CONTROLLER TO WALL WITH APPROPRIATE HARDWARE.

NOT TO SCALE

H REDUCED PRESSURE BACKFLOW PREVENTOR

KEYNOTES:
1. ENCLOSURE, INSTALL PER LOCAL GOVERNING GUIDELINES
2. REDUCED PRESSURE BACKFLOW PREVENTER ASSEMBLY, PER IRRIGATION MATERIAL SCHEDULE
3. HARD COPPER, TYP.
4. FINISH GRADE
5. COMPACTED SUBGRADE
6. SCH. 80 PVC COUPLING
7. CONCRETE THRUST BLOCK
8. COPPER ELL, TYP.
9. BRASS WYE STRAINER 100 MESH
10. COPPER ADAPTER, TYP.
11. 24"x36"x4" MIN. CLASS 'B' CONCRETE PAD
12. PVC SLEEVE, 2X THE HARD COPPER PIPE DIAMETER

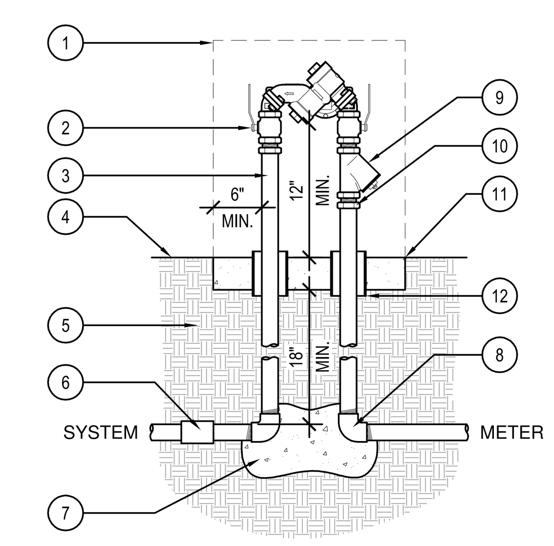

NOT TO SCALE

I GROUNDCOVER PLANTING

KEYNOTES:
1. MULCH PER SPEC.
2. TOPSOIL OR PLANT MIX PER SPECS.
3. SUBSOIL

NOTES:
1. TILL 2" OF POTTING OR PLANTING SOIL OR APPROVED EQUAL TO A DEPTH OF 6"
2. D = ON CENTER DIMENSION

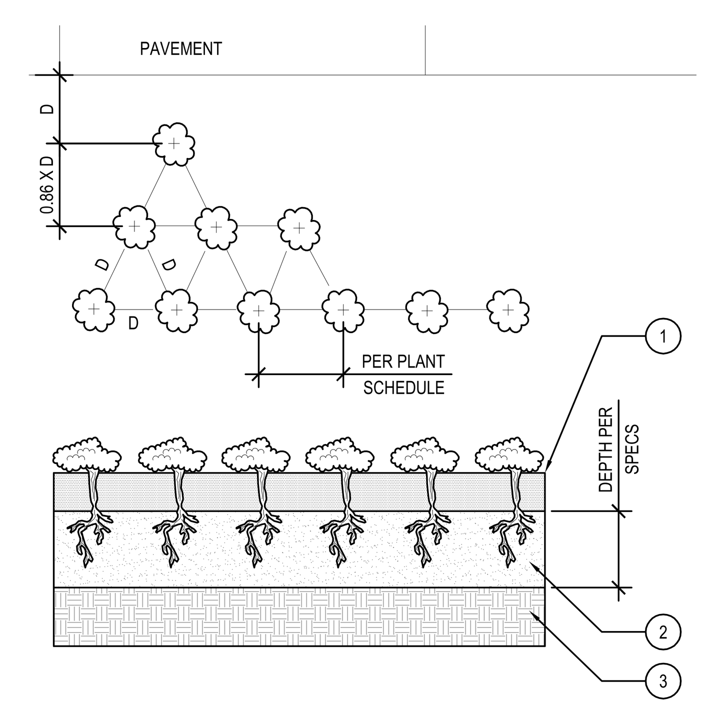

NOT TO SCALE

J BACKFLOW PREVENTOR CAGE

KEYNOTES:
1. 1/2" #13 FLATTENED DIAMOND PATTERN STEEL MESH, TYP.
2. STEEL PIPE
3. ANGLE IRON, WELD MESH TO PIPE
4. WELD (2) 4" STEEL HINGES, HINGED UNITS ONLY
5. CONCRETE PAD
6. INSTALL SECURITY BRACKETS PER MANUFACTURE RECOMMENDATIONS. ALL HARDWARE TO BE STAINLESS STEEL.

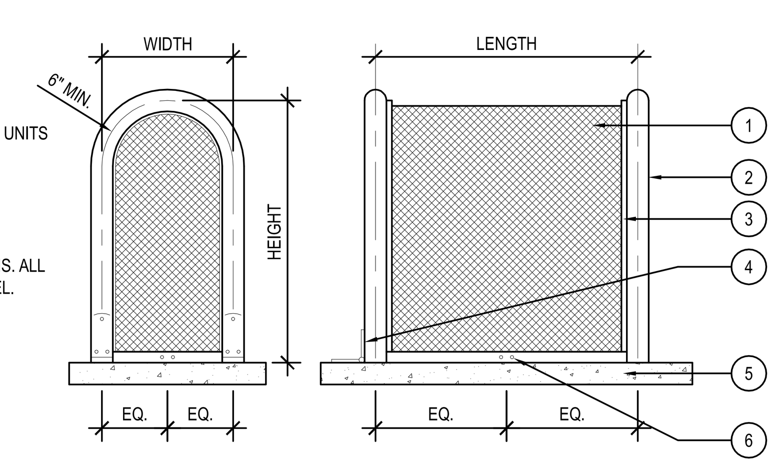

STD. SIZE	CENTERLINE DIMENSIONS	TYPE
GS-.5	12"W X 18"H X 12"L	LIFT OFF UNIT
GS-1	12"W X 24"H X 24"L	LIFT OFF UNIT
GS-2	12"W X 24"H X 32"L	LIFT OFF UNIT
GS-3	12"W X 24"H X 42"L	HINGED UNIT
GS-3.5	12"W X 30"H X 42"L	HINGED UNIT
GS-4	18"W X 30"H X 48"L	HINGED UNIT

NOT TO SCALE

K DRIP REMOTE CONTROL VALVE

KEYNOTES:
1. WYE STRAINER AND PRESSURE REGULATOR, PER IRRIGATION MATERIAL SCHEDULE
2. ELECTRIC REMOTE CONTROL VALVE, MODEL AND SIZE PER PLANS.
3. FINISH GRADE
4. PLASTIC VALVE BOX, WITH W/ LOCKING BOLT COVER SIZE AS REQUIRED TO ACCESS ALL EQUIPMENT. SET TOP OF VALVE BOX ABOVE FINISH GRADE 1/2" IN TURF AND 1" DECOMPOSED GRANITE.
5. ISOLATION VALVE, PER IRRIGATION MATERIAL SCHEDULE. INSTALL ONE VALVE PER TAP (TWO REMOTE CONTROL VALVES MAX. PER TAP).
6. SCH. 80 FITTING AS REQUIRED
7. 6" LAYER OF PEA GRAVEL

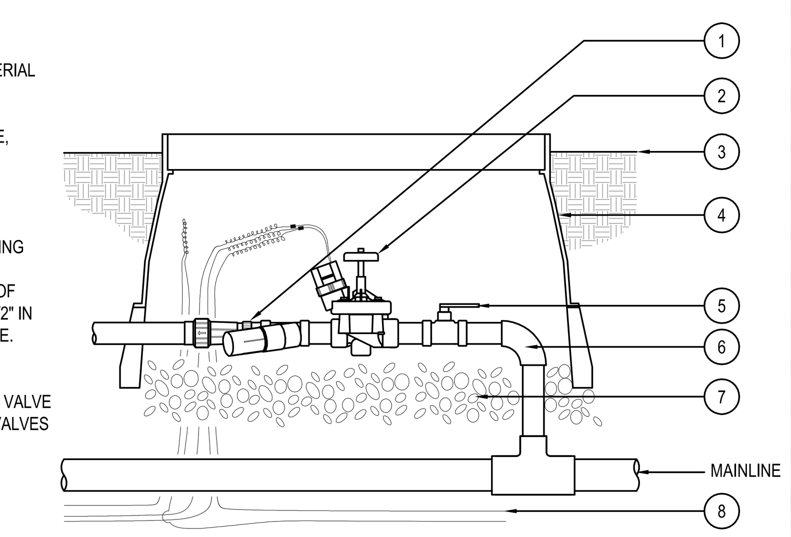

NOTES:
1. USE DRY-TYPE WATERPROOF CONNECTORS.
2. PROVIDE EXPANSION COILS AT EACH WIRE CONNECTION IN VALVE BOX. WRAP WIRE AROUND 1/2" PIPE 15 TIMES.
3. MAINTAIN 6" BETWEEN VALVE AND TOP OF BOX.
4. EMBOSS COVER WITH 1/2" NUMBERS WHICH CORRESPOND TO VALVE NUMBERS AT IRRIGATION CONTROLLER.

NOT TO SCALE

L SINGLE-PORT EMITTER

KEYNOTES:
1. EMISSION POINT WITH BUG PLUG
2. FINISH GRADE
3. MICROTUBING
4. DRIP EMITTER
5. PVC LATERAL
6. PLANT PIT
7. SINGLE-PORT DRIP EMITTER
8. 1/2" SCH. 80 PVC "TOE" NIPPLE
9. LATERAL LINE
10. SxS PVC FITTING
11. 0.160x0.220 MICROTUBING

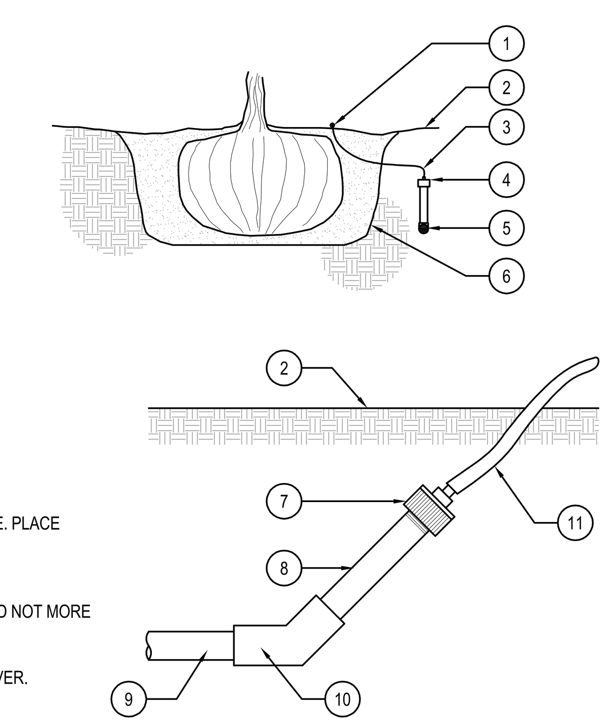

NOTES:
1. INSTALL EMITTERS PER IRRIGATION MATERIAL SCHEDULE. PLACE EMITTERS ON THE UPHILL SIDE OF THE PLANT MATERIAL.
2. PRIOR TO EMITTER INSTALLATION ALL LINES, INCLUDING MICROTUBING SHALL BE FLUSHED A MIN. OF 10 MINUTES.
3. MICROTUBING NOT EXCEED 5' IN LENGTH OR BE EXPOSED NOT MORE THAN 6".
4. SINGLE OUTLET EMITTERS SHALL BE USED FOR SHRUBS. MULTI-PORT EMITTERS SHALL BE USED FOR GROUNDCOVER.

NOT TO SCALE

M MULTI-PORT EMITTER

KEYNOTES:
1. EMISSION POINT WITH BUG PLUG
2. FINISH GRADE
3. MICROTUBING
4. DRIP EMITTER
5. PVC LATERAL
6. PLANT PIT
7. MULTI-PORT DRIP EMITTER
8. 1/2" SCH. 80 PVC NIPPLE
9. LATERAL LINE
10. 0.160x0.220 MICROTUBING
11. SxT PVC FITTING

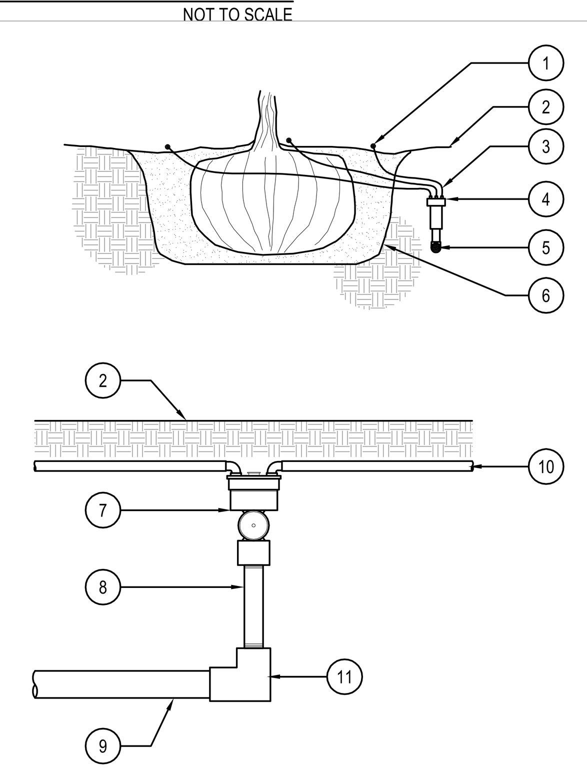

NOTES:
1. INSTALL EMITTERS PER IRRIGATION MATERIAL SCHEDULE. PLACE EMITTERS ON THE UPHILL SIDE OF THE PLANT MATERIAL.
2. PRIOR TO EMITTER INSTALLATION ALL LINES, INCLUDING MICROTUBING SHALL BE FLUSHED A MIN. OF 10 MINUTES.
3. MICROTUBING NOT EXCEED 5' IN LENGTH OR BE EXPOSED NOT MORE THAN 6".
4. SPACE EMITTERS AND EMISSION POINTS EVENLY AROUND PERIMETER OF TREES' DRIP ZONE.

NOT TO SCALE

N LATERAL LINE FLUSH VALVE

KEYNOTES:
1. BOLT DOWN LOCKING VALVE BOX
2. FINISH GRADE
3. BALL VALVE WITH FEMALE HOSE THREADS, LINE SIZE
4. 6" LAYER OF PEA GRAVEL
5. LATERAL LINE

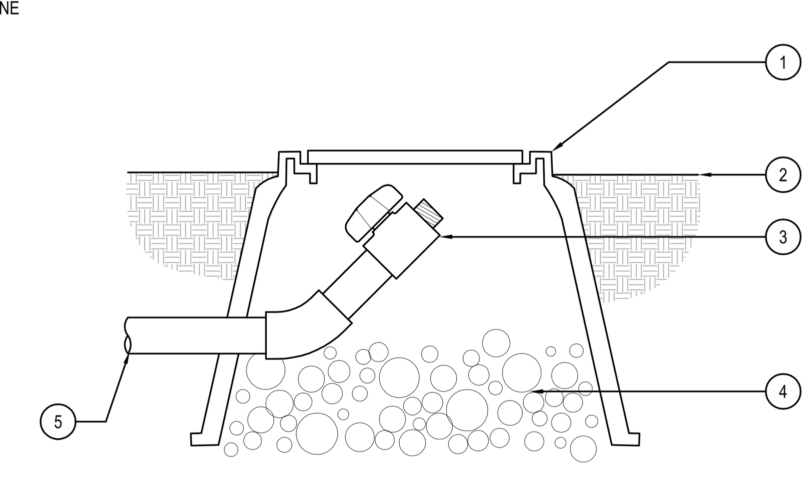

NOT TO SCALE

O WATERING SCHEDULE

TEMPERATURE	1ST YEAR	2-5 YEARS	AFTER 5 YEARS
TREES			
OVER 108 DEGREES	EVERY 2 DAYS	EVERY 10 DAYS	EVERY 3 WEEKS
OVER 100 DEGREES	ONCE A WEEK	EVERY 10 DAYS	GRADUALLY EXTEND INTERVALS TO EVERY 4 WEEKS
90-100 DEGREES	EVERY 10 DAYS	EVERY 2 WEEKS	GRADUALLY EXTEND INTERVALS TO EVERY 6 WEEKS
75-90 DEGREES	EVERY 2 WEEKS	EVERY 3 WEEKS	WATER IF NO RAINFALL FOR 60 DAYS
BELOW 75 DEGREES	EVERY 30 DAYS	EVERY 30 DAYS	WATER IF NO RAINFALL FOR 60 DAYS
SHRUBS			
TEMPERATURE	**1ST YEAR**	**2-5 YEARS**	**AFTER 5 YEARS**
OVER 108 DEGREES	EVERY DAY	EVERY 3 DAYS	EVERY WEEK
OVER 100 DEGREES	ONCE A WEEK	EVERY 10 DAYS	EVERY 2 WEEKS
90-100 DEGREES	EVERY 10 DAYS	EVERY 2 WEEKS	EVERY 3 WEEKS
75-90 DEGREES	EVERY 2 WEEKS	EVERY 3 WEEKS	EVERY 4 - 5 WEEKS
BELOW 75 DEGREES	EVERY 30 DAYS	EVERY 30 DAYS	EVERY 4 - 5 WEEKS

NOTES:
1. SMALL PLANTS IN 1 GALLON CONTAINERS NEED TO BE WATERED TWICE A WEEK.
2. THE WATERING CHART IS PROVIDED AS A GUIDE ONLY AND MUST BE ADJUSTED FOR SPECIFIC TEMPERATURE AND ENVIRONMENTAL CONDITIONS. IT IS THE OWNER'S RESPONSIBILITY TO MAINTAIN ALL PLANT MATERIALS IN A THRIVING, HEALTHY CONDITIONS.

scale

PINNACLE DESIGN, INC
1048 N. 44th Street
Suite 200 ▲ Phoenix, AZ 85008
Ofc:(602)952-8585 ▲ Fax:952-8686
Job # 10043

100% CONSTRUCTION DOCUMENT SUBMITTAL LANDSCAPE PLAN

Department of Veterans Affairs

ARCHITECT OF RECORD:

REGISTERED LANDSCAPE ARCHITECT WILLIAM H.D. FRANSIC 85251 STATE OF TEXAS
7-15-2011

SBBL Architecture + Planning
1001 North Alvernon Way # 105, Tucson, Arizona 85711
t: 520.620.0255 f: 520.620. 0535 e: sbbl@sbbl.biz

EMERGENCY DEPARTMENT

AMARILLO VA HEALTH CARE SYSTEM
AMARILLO, TEXAS

Approved: VA Area Proj. Mgr.

V.A. PROJECT NO VA258-P-0196
SBBL PROJECT NO:0110.00.0
DRAWN BY: BTP
CHECKED BY: Checker
DATE: 07/15/11

△	Date	Revision

Approved: Med. Cter. Director

Approved: Asst. Admin Engineering Service

Approved: Asst. VA Medical Director

Approved: Chief of Facilities

Approved: Chief of Engineering

Approved: Chief of Projects

48-LS-4