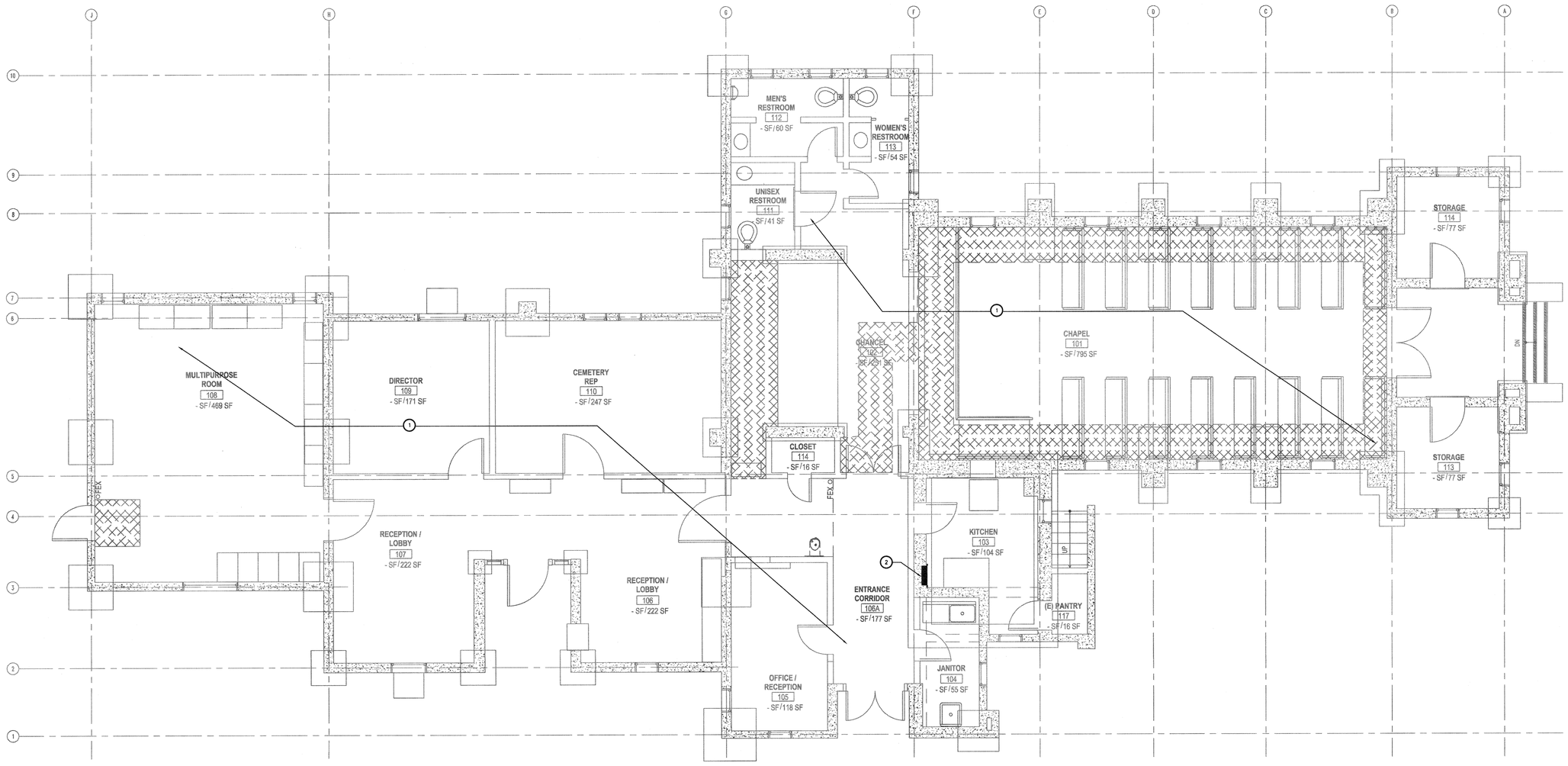

F1 / E4 **POWER PLAN - DEMOLITION FIRST FLOOR**

SCALE: 1/4" = 1'-0"

GENERAL NOTES

1. REMOVE ALL EXISTING DEVICES, AND SURFACE MOUNT RACEWAY, MAINTAIN ALL CONCEALED CONDUITS AND WIRES.

KEY NOTES

1. REMOVE ALL EXISTING WIRING DEVICES AND EXPOSED CONDUITS IN PROJECT AREA. MAINTAIN ALL EXISTING EMBEDED AND CONCEALED CONDUITS TO BE USED FRO REMODEL WORK.
2. REMOVE THE INTERIOR COMPONENET OF THE EXISTING BRANCH CRICUIT BREAKER PANELBOARD. KEEP PANEL ENCLOSURE TO BE USED AS A PULL BOX TO CONNECT WIRING FROM EMBEDED CONDUITS TO NEW PANELBOARD.

TRUE NORTH

NON-SPRINKLERED

CD2 SUBMISSION - ISSUED FOR CONSTRUCTION

No.	Description	Date

CONSULTANTS:

MAZZETTI
2201 Dupont Drive, Suite 800
Irvine, CA 92612-7507
TEL: 949.475.5550
www.mazzetti.com
Project Number: 152-022

Seals and Signatures

ARCHITECT/ENGINEERS:

LEO A DALY
PLANNING ARCHITECTURE ENGINEERING INTERIORS
550 South Hope Street, 27th Floor
Los Angeles, California 90071, USA
213-629-0100 F213-629-0070 EST. 1915

Drawing Title: **POWER PLAN - DEMOLITION FIRST FLOOR**

Approved: Project Director

Project Title: VA Los Angeles National Cemetery, Phase 1A

Location: Los Angeles National Cemetery, 950 South Sepulveda Boulevard, Los Angeles, California 90049

Date: 06-10-2016 | Checked: JP | Drawn: ST

VA Project Number: 898CM2032

Building Number: 1001

Drawing Number: E4

Dwg. of

Office of Construction and Facilities Management

Department of Veterans Affairs

VA FORM 08-6231

P:\15\152-022 - VA IDIQ LANC Columbarium Expan Improve\Dwgs\ELEC\152-022-E4 DEMO PWR.dwg 6-09-16 09:14:09 AM strain

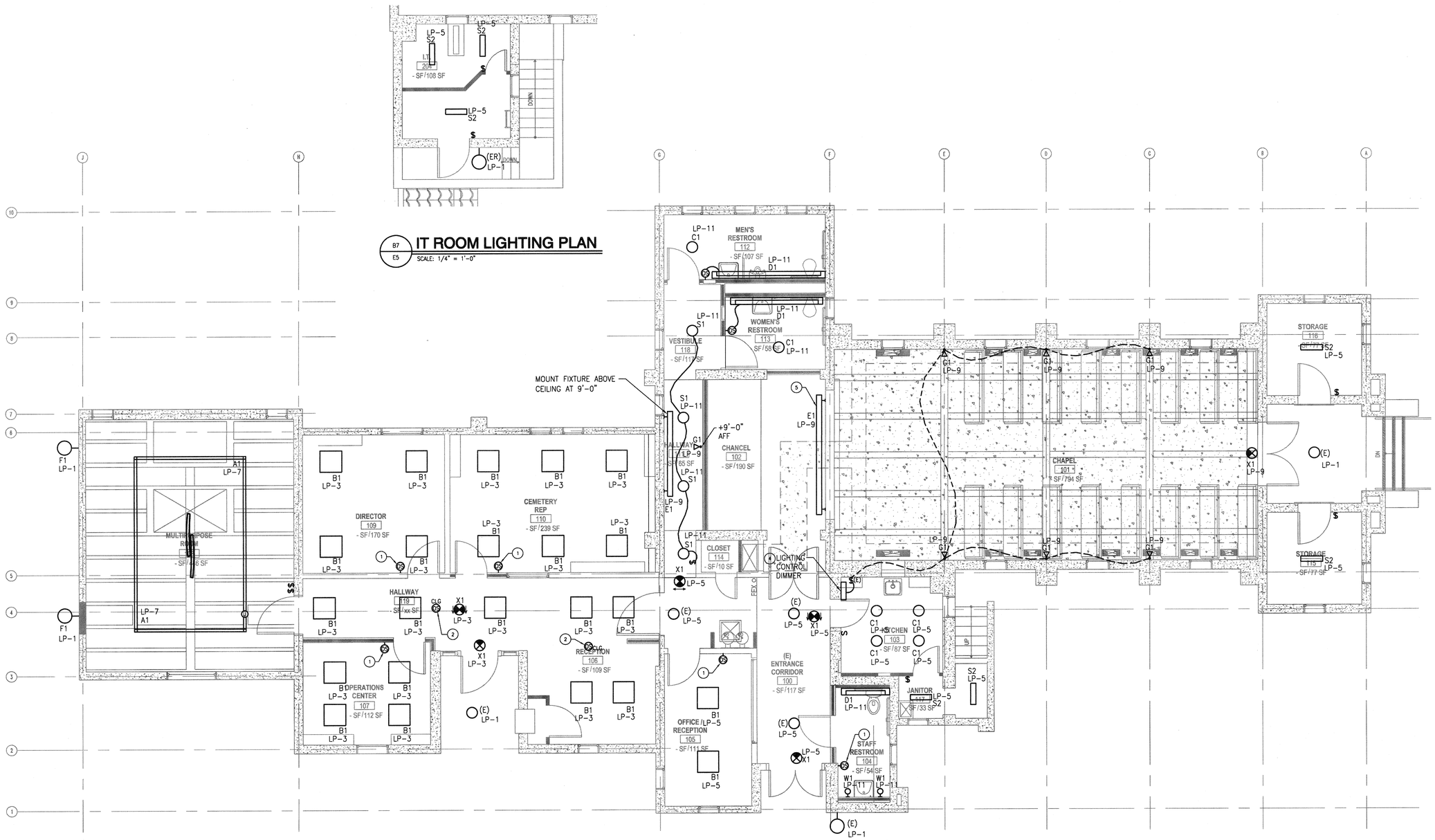

F1
E5
LIGHTING PLAN - REMODEL FIRST FLOOR
SCALE: 1/4" = 1'-0"

GENERAL NOTES

1. REFER TO DRAWING E-9 FOR LIGHT FIXTURE SCHEDULE.
2. REFER TO DRAWING E1 FOR GENERAL NOTES, ABBREVIATIONS AND SYMBOLS LIST.

KEY NOTES

1. CONNECT OCCUPANCY SENSORS TO CONTROL THE LIGHTS INSIDE THE ROOM.
2. CONNECT OCCUPANCY SENSORS TO CONTROL THE LIGHTS IN ROOMS 119 AND 106.
3. CONNECT OCCUPANCY SENSORS TO CONTROL THE LIGHTS IN ENTRANCE CORRIDOR 100.
4. DIMMER FOR FLOOD LIGHTS.
5. REFER TO DETAIL D1 ON E9 FOR MOUNTING OF TYPE E1 FIXTURE.

TRUE NORTH

NON-SPRINKLERED
CD2 SUBMISSION - ISSUED FOR CONSTRUCTION

No.	Description	Date

CONSULTANTS:

MAZZETTI
2201 Dupont Drive, Suite 800
Irvine, CA 92612-7507
TEL: 949.475.5550
www.mazzetti.com
Project Number: 152-022

Seals and Signatures

ARCHITECT/ENGINEERS:

LEO A DALY
PLANNING ARCHITECTURE ENGINEERING INTERIORS
550 South Hope Street, 27th Floor
Los Angeles, California 90071, USA
213-629-0100 F213-629-0070 EST. 1915

Drawing Title: LIGHTING PLAN - REMODEL FIRST PLAN

Approved Project Director

Project Title: VA Los Angeles National Cemetery, Phase 1A

VA Project Number: 898CM2032

Building Number: 1001

Location: Los Angeles National Cemetery, 950 South Sepulveda Boulevard, Los Angeles, California 90049

Date: 06-10-2016 | Checked: JP | Drawn: ST

Drawing Number: E5

Dwg. of

Office of Construction and Facilities Management
Department of Veterans Affairs

P:\15\152-022 - VA IDIQ LANC Columbarium Expan improve\Dwgs\ELEC\152-022-E5 LTG.dwg 6-09-16 09:14:23 AM sitan

VA FORM 08-6231

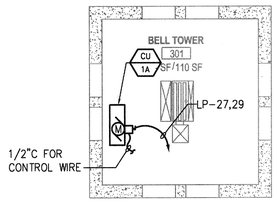

B1 E6 **POWER PLAN - BELL TOWER**
SCALE: 1/4" = 1'-0"

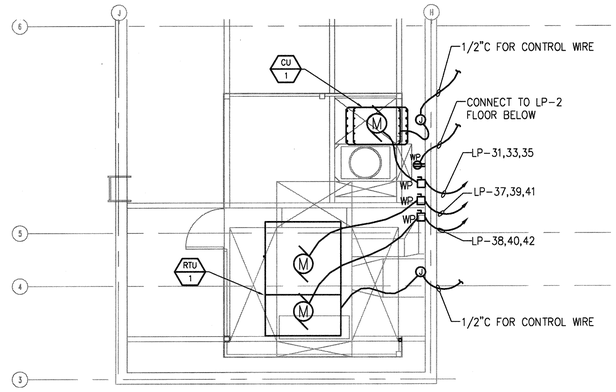

B4 E6 **PARTIAL ROOF PLAN**
SCALE: 1/4" = 1'-0"

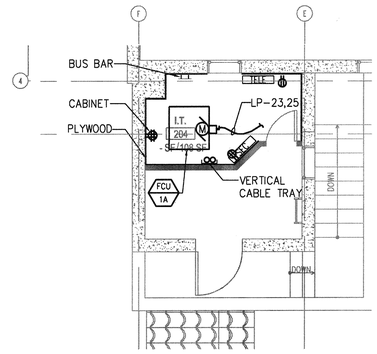

B7 E6 **IT ROOM**
SCALE: 1/4" = 1'-0"

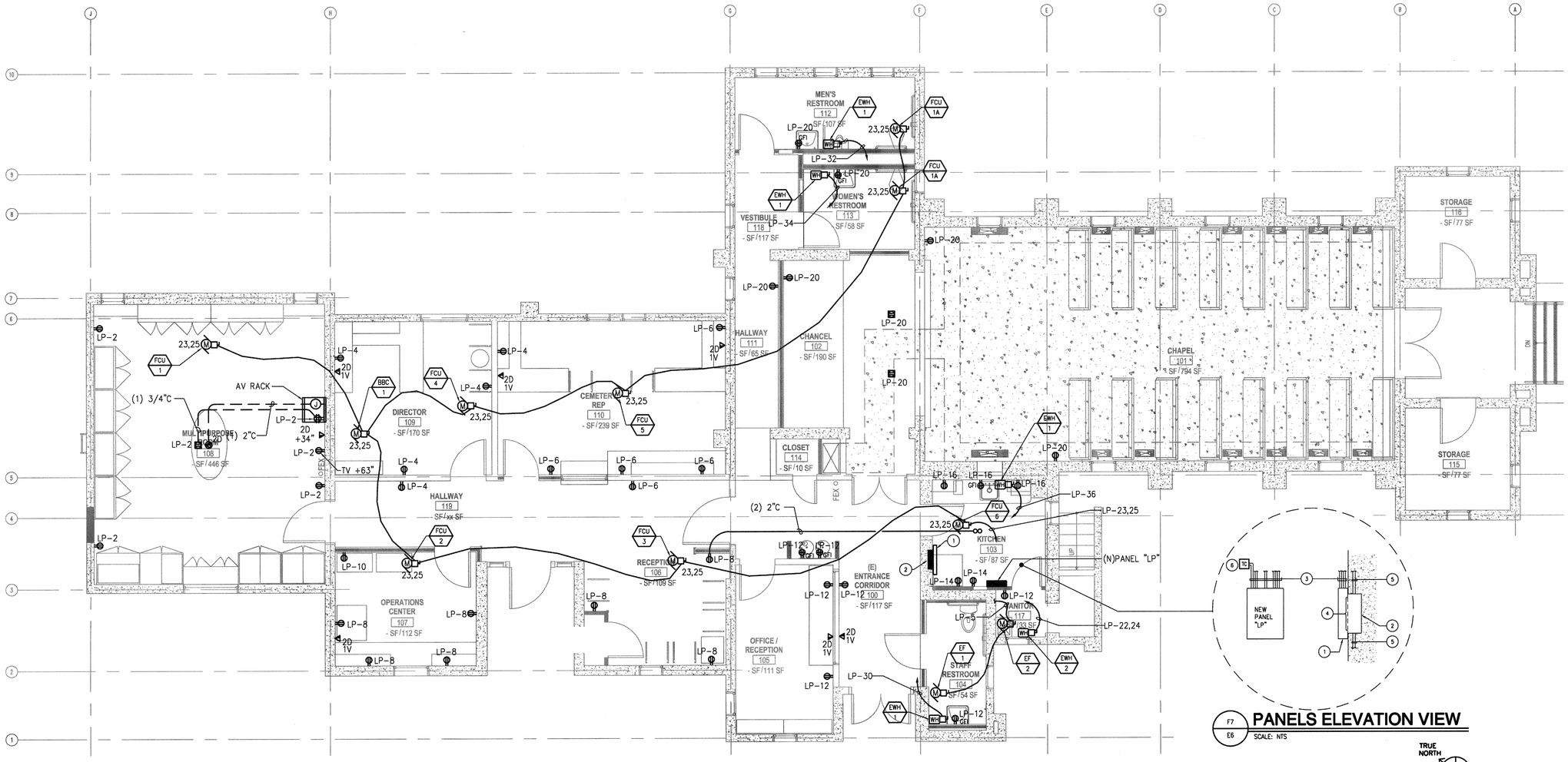

F1 E6 **POWER PLAN - REMODEL FIRST FLOOR**
SCALE: 1/4" = 1'-0"

F7 E6 **PANELS ELEVATION VIEW**
SCALE: NTS

TRUE NORTH

GENERAL NOTES

KEY NOTES

1. NEW 4" DEEP ENCLOSURE ON TOP OF EXISTING PANEL ENCLOSURE.
2. EXISTING PANEL ENCLOSURE EMBEDDED IN CONCRETE WALL.
3. NEW CONDUITS FROM NEW PANEL TO ENCLOSURE OF EXISTING PANEL.
4. CUT OPENING IN THE BACK OF NEW PANEL FOR CABLE ACESS TO EXISTING PANEL ENCLOSURE.
5. EXISTING EMBEDDED CONDUITS.
6. NEW DIGITAL TIME CLOCK.

NON-SPRINKLERED
CD2 SUBMISSION - ISSUED FOR CONSTRUCTION

No.	Description	Date

CONSULTANTS:

MAZZETTI
2201 Dupont Drive, Suite 800
Irvine, CA 92612-7507
TEL: 949.475.5550
www.mazzetti.com
Project Number: 152-022

Seals and Signatures

ARCHITECT/ENGINEERS:

LEO A DALY
PLANNING ARCHITECTURE ENGINEERING INTERIORS
550 South Hope Street, 27th Floor
Los Angeles, California 90071, USA
213-629-0100 F213-629-0070 EST. 1915

Drawing Title: POWER PLAN - REMODEL FIRST FLOOR, IT ROOM AND PARTIAL ROOF

Approved: Project Director

Project Title: VA Los Angeles National Cemetery, Phase 1A

Location: Los Angeles National Cemetery, 950 South Sepulveda Boulevard, Los Angeles, California 90049

Date: 06-10-2016 | Checked: JP | Drawn: ST

VA Project Number: 898CM2032
Building Number: 1001
Drawing Number: E6
Dwg. of

Office of Construction and Facilities Management
Department of Veterans Affairs

VA FORM 08-6231

P:\15\152-022 - VA 10NO LANC Columbarium Expan Improve\Dwgs\ELEC\152-022-E6 PWR.dwg 6-09-16 09:14:34 AM stran

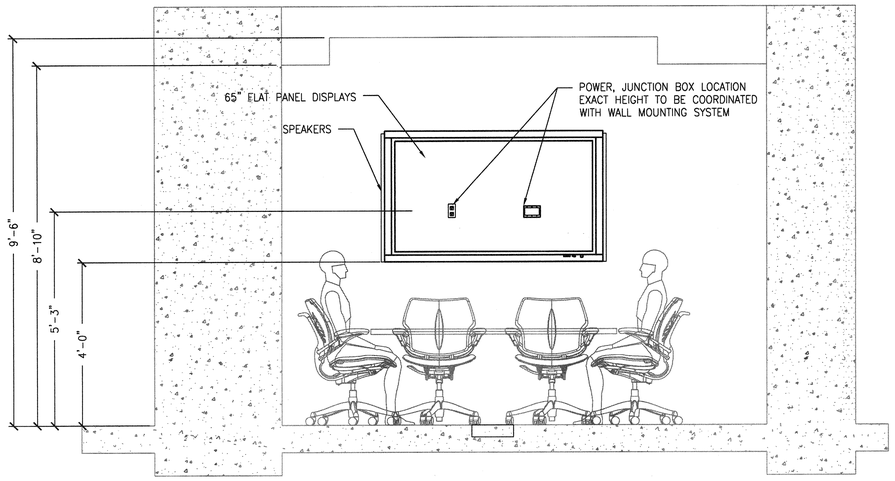

C1 / E7 **AUDIOVISUAL TYPICAL ROOM ELEVATION LAYOUT**

SCALE: 1/2" = 1'-0"

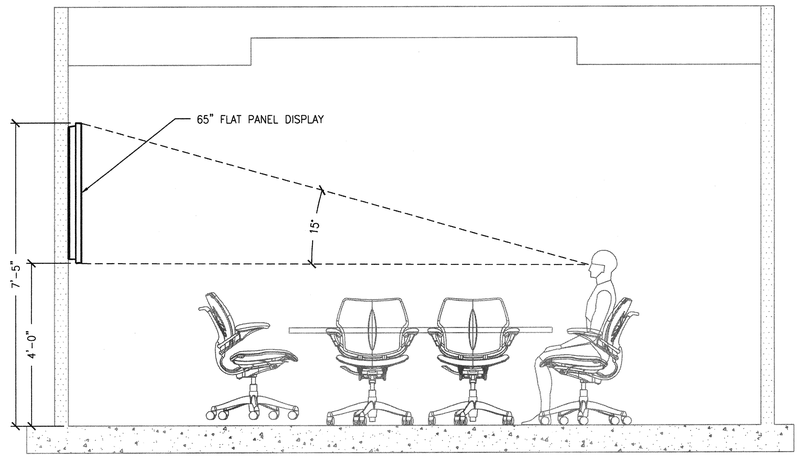

C4 / E7 **AUDIOVISUAL TYPICAL ROOM SECTIONAL LAYOUT**

SCALE: 1/2" = 1'-0"

GENERAL NOTES

1. 65" FLAT SCREEN AND SPEAKERS PROVIDED BY OWNER, INSTALLED BY CONTRACTOR.

KEY NOTES

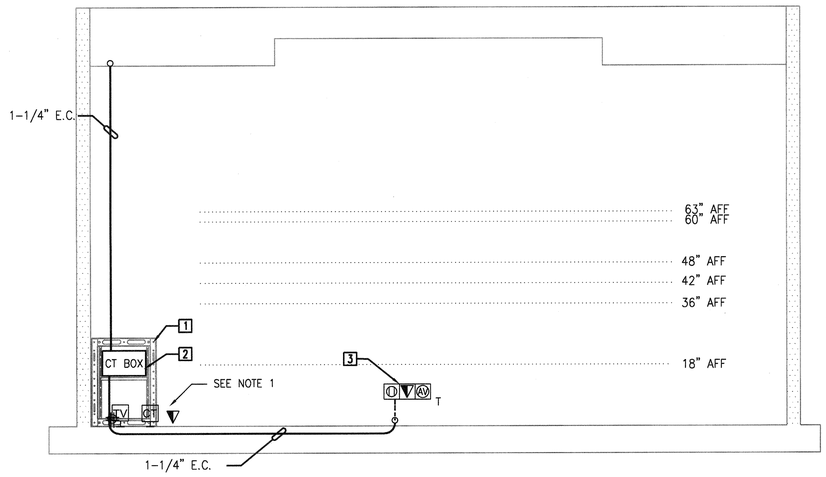

F1 / E7 **AUDIOVISUAL CONFERENCE TYPICAL ROOM CONDUIT RISER DIAGRAM**

SCALE: 1/2" = 1'-0"

AV LOCATION SCHEDULE	
ID TAG	DESCRIPTION
1	AV EQUIPMENT RACK
2	CONDUIT TERMINATION BOX
3	FLOOR BOX INPUT COMPARTMENT
4	NOT USED
5	FLAT PANEL LCD DISPLAY

LINE TYPE LEGEND			
L3	CONDUIT	————	CONTINUOUS
L2	PLENUM	- - - - - - - -	DASHED
L1	AFF	.....	DOT

RISER NOTES:

1. PROVIDE (1) QUAD RECEPTACLE, (1) CATV OUTLET, (2) DATA AND (2) ANALOG VOICE.
2. REFER TO PLAN FOR EXACT QUANTITY OF DEVICES.

NON-SPRINKLERED
CD2 SUBMISSION - ISSUED FOR CONSTRUCTION

No.	Description	Date

CONSULTANTS:

MAZZETTI
2201 Dupont Drive, Suite 800
Irvine, CA 92612-7507
TEL: 949.475.5550
www.mazzetti.com
Project Number: 152-022

Seals and Signatures

ARCHITECT/ENGINEERS:

LEO A DALY
PLANNING ARCHITECTURE ENGINEERING INTERIORS
550 South Hope Street, 27th Floor
Los Angeles, California 90071, USA
213-629-0100 F213-629-0070 EST. 1915

Drawing Title: **TECH - MULTIPURPOSE ROOM ELEVATION**

Approved Project Director

Project Title: VA Los Angeles National Cemetery, Phase 1A

Location: Los Angeles National Cemetery, 950 South Sepulveda Boulevard, Los Angeles, California 90049

Date: 06-10-2016 | Checked: JP | Drawn: ST

VA Project Number: 898CM2032

Building Number: 1001

Drawing Number: E7

Dwg. of

Office of Construction and Facilities Management

Department of Veterans Affairs

VA FORM 08-6231

P:\15\152-022 - VA IDIQ LANC Columbarium Expan Improve\Dwgs\ELEC\152-022-E7 TECH IT ROOM DETAILS.dwg 6-09-16 09:14:40 AM strom

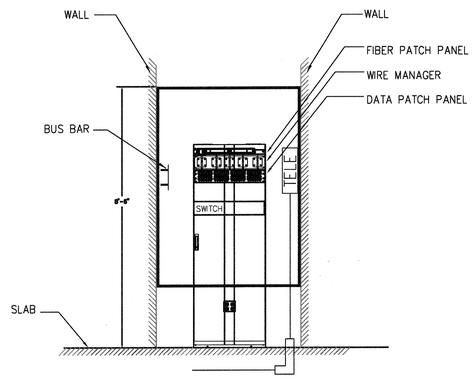

EQUIPMENT PROVIDED BY CONTRACTOR, TAGS ARE FOR REFERENCE ONLY

CABINET PROVIDED AND INSTALLED BY CONTRACTOR,
ACTIVE EQUIPMENT PROVIDED AND INSTALLED BY CONTRACTOR.

D2 / E8 **ELEVATION - TOWER IT ROOM**

SCALE: 1/2" = 1'-0"

NON-SPRINKLERED
CD2 SUBMISSION - ISSUED FOR CONSTRUCTION

No.	Description	Date

CONSULTANTS:

MAZZETTI
2201 Dupont Drive, Suite 800
Irvine, CA 92612-7507
TEL: 949.475.5550
www.mazzetti.com
Project Number: 152-022

Seals and Signatures

ARCHITECT/ENGINEERS:

LEO A DALY
PLANNING ARCHITECTURE ENGINEERING INTERIORS
550 South Hope Street, 27th Floor
Los Angeles, California 90071, USA
213-629-0100 F213-629-0070
EST. 1915

Drawing Title
TECHNOLOGY - IT ROOM ELEVATION

Approved: Project Director

Project Title
VA Los Angeles National Cemetery, Phase 1A

Location: Los Angeles National Cemetery, 950 South Sepulveda Boulevard, Los Angeles, California 90049

Date: 06-10-2016 | Checked: JP | Drawn: ST

VA Project Number: 898CM2032
Building Number: 1001
Drawing Number: E8
Dwg. of

Office of Construction and Facilities Management
Department of Veterans Affairs

VA FORM 08-6231

P:\15\152-022 - VA IDIQ LANC Columbarium Expan Improve\Dwgs\ELEC\152-022-E8 TECH ROOM ELEVATION DETAILS.dwg 6-09-16 09:14:43 AM stron

LIGHTING FIXTURE SCHEDULE

FIXTURE TYPE	PLAN SYMBOL	DESCRIPTION	MANUFACTURER AND CATALOG NO.	LAMPS TYPE	LAMPS QTY	LAMPS WATTS	TOTAL WATTS	VOLTAGE	REMARKS
A1		PENDANT DIRECT/ INDIRECT LED FIXTURE	BIRCHWOOD LIGHTING ERICA LED ERI-LED-DR/IN-225-SLO-27	LED 2700K		10W/LF	520	120	FIXTURE DIMENSION AS SHOWN ON LIGHTING PLAN
B1		2'x2' RECESSED LED	METALUX 225R SERIES	LED 2700K		20	20	120	
C1		RECESSED DOWNLIGHT FIXTURE 6" WITH LED LAMP.	DAS LIGHTING LEDDOWN PNLR6	LED	1	12	12	120	
D1		LINEAR WALL MOUNT BATHROOM FIXTURE	DAY-O-LITE PTPL-24-DA-DP-30-LO	LED		8W/LF		120	FIXTURE LENGTH TO MATCH ROOM WIDTH, SEE LIGHTING PLAN, USE STANDARD 1' LENGTH INCREMENTS.
E1		LINEAR WALL MOUNT LED LIGHT	NEO-RAY-S22-DW-2L30	LED		9W/LF		120	MOUNT FIXTURE ON WALL CONTINUOUS INSTALLATION SEE DETAIL FOR TOTAL FIXTURE DIMENSION
F1		OUTDOOR WALL FIXTURE	THOMAS LIGHTING HAW THORNE 1-LIGHT DARK BRONZE FINISH	LED		50W		120	
G1		LED FLOOD LIGHT	LUMENBEAM LBL-120-27K-WFL-LSLH-WH-DIM-SY	LED 2700K		50		120	USE 50 WATT MAXLITE 3000K SKPT50LEDU30E39 OR EQUAL
S1		SURFACE MOUNT CEILING FIXTURE	WAC LIGHTING ASTORIA FM-7013-BO	LED	1	30	30	120	
S2		CLOSET SURFACE LIGHT FIXTURE	METALUX AP 25LWP2040ND-120	LED		23		120	
W1		WALL SCONCE LED	HEMERA CHARLOTTE LED DARK BRONZE FINISH	LED		10		120	
X1		EXIT LIGHT	1SOLITE ELT SERIES	LED		5		120	

Panel: **NEW PANEL LP**
Main: 200 A / 3P
Enclosure: NEMA 1
AIC Rating: 14,000

Bus Rating (Amps): 200A
Volts (L-L): 208V
Phase: 3
Wires: 4

Ckt	Description	Load Type	Load (KVA)	OC Device Amps	OC Device Poles	Phase	OC Device Amps	OC Device Poles	Load (KVA)	Load Type	Description	Ckt
1	OUT DOOR (LTG)	1	0.20	20	1	A	20	1	1.08	2	RECEPTS RM 108 AND ROOF	2
3	RM 108,107,109,110,119 (LTG)	1	0.42	20	1	B	20	1	0.54	2	RECEPTS RM 109:110,119	4
5	RM 100,103,117 (LTG)	1	0.22	20	1	C	20	1	1.08	2	RECEPTS RM 110,119	6
7	RM 108	1	0.40	20	1	A	20	1	1.08	2	RECEPTS RM 106;107	8
9	RM 101,111 (LTG)	1	0.67	20	1	B	20	1	0.50	2	RECEPTS RM 107	10
11	RM 104,111-113,118 (LTG)	1	0.26	20	1	C	20	1	0.54	2	RECEPTS RM 100,104,105,117	12
13	IT RM	7	1.50	30	1	A	20	1	0.70	2	RECEPTS RM 103	14
15	IT RM	7	1.00	20	1	B	20	1	0.80	2	RECEPTS RM 103	16
17	IT RM	7	1.00	20	1	C	20	1			SPARE	18
19	SPARE			20	1	A	20	1	0.70	2	RECEPTS RM 102,111-113	20
21	SPARE			20	1	B	20	2	3.50	5	EWH-2	22
23	BCC AND FCU(S)	3	0.60	20	2	C			3.50	5		24
25		3	0.60			A	20	1			SPARE	26
27	CU-1A	3	1.50	20	2	B	20	1			SPARE	28
29		3	1.50			C	20	1	3.00	5	EWH-1	30
31	CU-1	3	3.80	50	3	A	30	1	3.00	5	EWH-1	32
33		3	3.80			B	30	1	3.00	5	EWH-1	34
35		3	3.80			C	30	1	3.00	5	EWH-1	36
37	RTU	3	4.50	50	3	A	20	3	0.65	3	RTU EXH FAN	38
39		3	4.50			B			0.65	3		40
41		3	4.50			C			0.65	3		42

LOAD TYPE (NUMBER)	0	1	2	3	4	5	6	7		
LOAD TYPE (DESCRIPTION)	P.Rm.Lt.	Lighting	Receps	Motors	L. Mot.	Kitch	Elevator	Equip	Total	
NEW PANEL LP SECTN1	0.00	2.17	7.02	31.05	0.00	10.00	0.00	3.50	53.7	
NEW PANEL LP SECTN2	0.00	0.00	0.00	0.00	0.00	0.00	0.00	0.00	0.0	
TOTAL CONNECTED LOAD	0.00	2.17	7.02	31.05	0.00	10.00	0.00	3.50	53.7	
DEMAND MULTIPLIER:	*1.00*	*1.25*	*formula*	*1.00*	*1.25*	*1.00*	*1.00*	*1.00*		
TOTAL DESIGN LOAD (KVA)	0.00	2.71	7.02	31.05	0.00	10.00	0.00	3.50	54.3	KVA
TOTAL DESIGN LOAD (AMPS)									150.7	AMPS

ADDITIONAL LOAD IS WITHIN CAPACITY OF PANEL

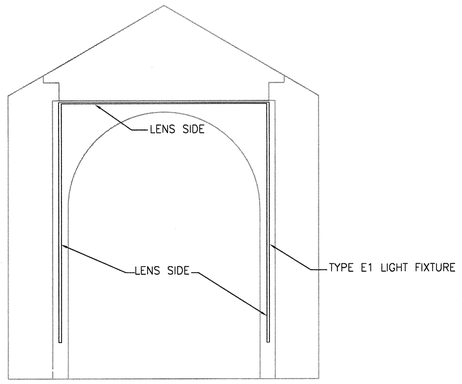

D1/E9 TYPE E1 LIGHT FIXTURE MOUNTING DETAIL

SCALE: 1/4"=1'-0"

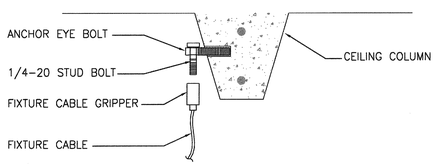

F1/E9 PENDANT FIXTURE MOUNTURE IN MULTIPURPOSE ROOM

SCALE: NTS

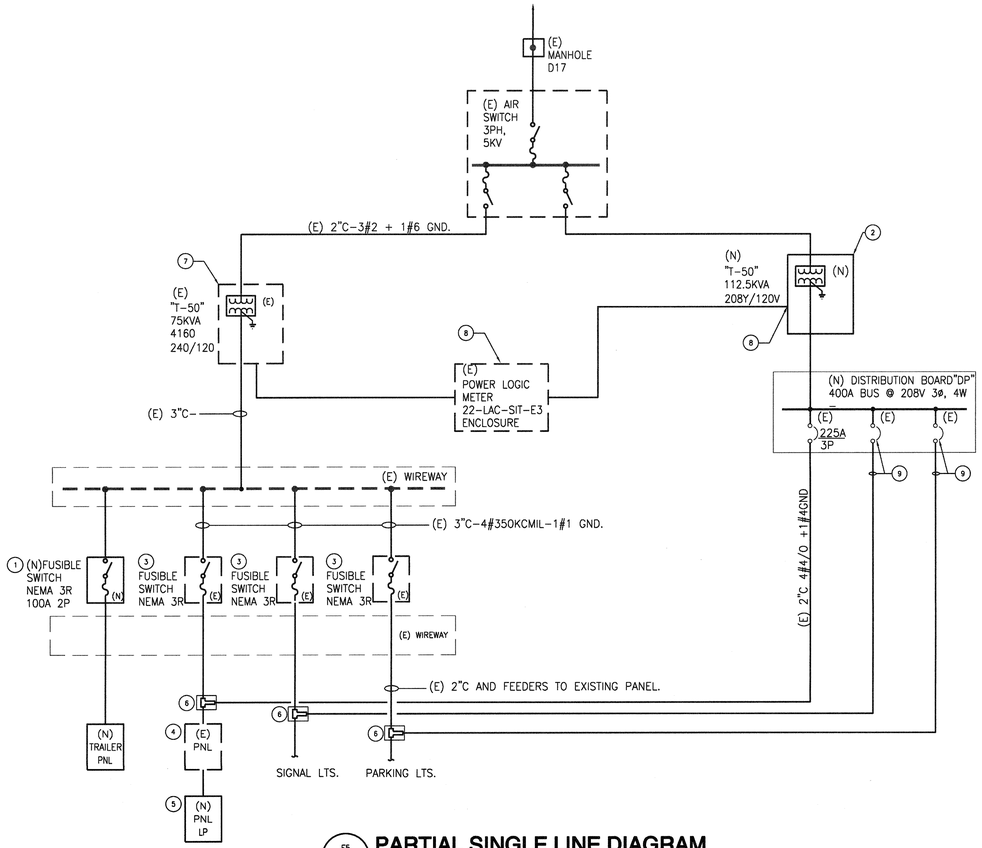

F5/E8 PARTIAL SINGLE LINE DIAGRAM

SCALE: NTS

KEY NOTES

1. INSTALL NEW DISCONNECT SWITCH AT THE GUTTER NEAR EXISTING TRANSFORMER TO FEED THE TEMPORARY TRAILER PANEL
2. INSTALL NEW PAD MOUNT TRANSFORMER AND DISTRIBUTION PANEL.
3. DISCONNECT POWER TO EXISTING PANEL IN CHAPEL BUILDING.
4. REMOVE THE INTERIOR COMPONENETS OF THE EXISTING PANLE AND USE THE CONCRETE ENCASED PANEL ENCLOSURE AS A PULL BOX.
5. INSTALL NEW PANEL IN KITCHEN, EXTEND EXISTING CONDUITS FROM EXISTING PANEL ENCLOSURE TO NEW PANEL.
6. AFTER COMPLETION OF THE CHAPEL BUILDING, TRANSFER THE EXISTING LOADS FOR TRAFIC SIGNAL, CHAPEL BUILDING AND PARKING LIGHTS TO NEW DISTRIBUTION PANEL.
7. AFTER REMOVAL OF THE TEMPORARY TRAILER, REMOVE THE EXISTING TRANSFOMRER, DISCONNECT SWITCHES, AND GUTTERS.
8. REPLACE EXISTING SINGLE PHASE POWER LOGIC METER WITH A 3 PAHSE POWER LOGIC METER AND CONNECT TO NEW TRANSFORMER.
9. VERIFY THE SIZE OF THE EXISTING FUSES FOR TRAFIC SIGNAL AND PARKING LIGHT FEEDERS AND INSTALL NEW CIRCUIT BREAKERS IN NEW DISRIBUTION PANEL "DP" TO MATCH THE FUSE SIZE. INSTALL FEEDERS TO MATCH THE EXISTING FEEDERS.

NON-SPRINKLERED
CD2 SUBMISSION - ISSUED FOR CONSTRUCTION

No.	Description	Date

CONSULTANTS:

MAZZETTI
2201 Dupont Drive, Suite 800
Irvine, CA 92612-7507
TEL: 949.475.5550
www.mazzetti.com
Project Number: 152-022

Seals and Signatures

ARCHITECT/ENGINEERS:

LEO A DALY
PLANNING ARCHITECTURE ENGINEERING INTERIORS
550 South Hope Street, 27th Floor
Los Angeles, California 90071, USA
213-629-0100 F213-629-0070 EST. 1915

Drawing Title: **LIGHTING FIXTURE, PANEL SCHEDULES AND SINGLE LINE DIAGRAM**

Approved Project Director

Project Title: VA Los Angeles National Cemetery, Phase 1A

VA Project Number: 898CM2032

Building Number: 1001

Location: Los Angeles National Cemetery, 950 South Sepulveda Boulevard, Los Angeles, California 90049

Drawing Number: E9

Date: 06-10-2016 | Checked: JP | Drawn: ST | Dwg. of

Office of Construction and Facilities Management
Department of Veterans Affairs

VA FORM 08-6231

P:\15\152-022 - VA IDIQ LANC Columbarium Expan Improve\Dwgs\ELEC\152-022-E9 LTG FIXTURE.dwg 6-09-16 09:14:51 AM stran