FULLY SPRINKLERED

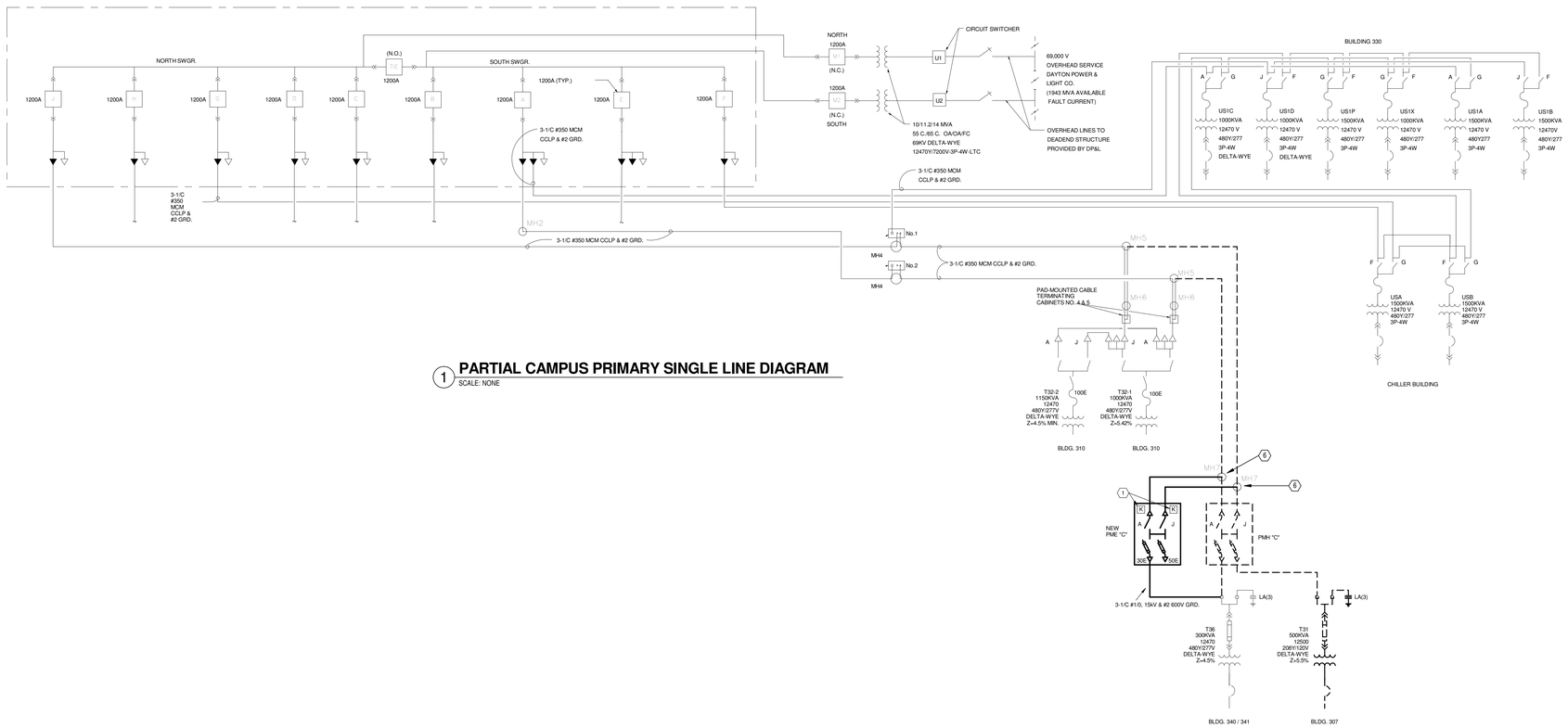

1 **PARTIAL CAMPUS PRIMARY SINGLE LINE DIAGRAM**
SCALE: NONE

NOTES

1. PROVIDE KIRK KEY INTERLOCK ON SOURCE SWITCHES.
2. PROVIDE A 125A/3P CIRCUIT BREAKER FOR NEW TRANSFORMER "T5."
3. TRANSFORMER IMPEDANCE SHALL BE NO LESS THAN 3.7% Z
4. USE SPARE 200A CIRCUIT BREAKER TO FEED PANEL "2A".
5. REPLACE PANELS 4A, 1A, 1B,1C, A, B, GA, EM, EM1 AND EM2. SEE PANEL SCHEDULES FOR FURTHER INFORMATION. UNDER ALTERNATE PANELS REMAIN. PROVIDE CIRCUIT BREAKERS AS INDICATED ON DRAWINGS FOR NEW CIRCUITS.
6. SPICE FEEDER IN MANHOLE AND EXTEND CABLE TO NEW PME SWITCH.

AA - 225A MCO 480/277V 42 CRT
38- 20/1A BREAKERS
2- 20/3A BREAKERS
1A - 225A MCO 208/120V 42 CRT
42- 20/1A BREAKERS
DOUBLE LUGS
1B - 225A MCO 208/120V 42 CRT
42- 20/1A BREAKERS
EM2- 100A 208/120V 32 CRT
1- 30/1 A
1- 20/2 A
20- 20/1A BREAKERS

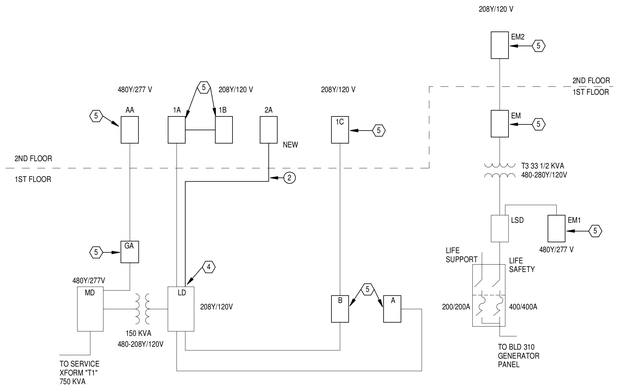

3 **B315 - PARTIAL SINGLE-LINE DIAGRAM**
SCALE: NONE

FEEDER SCHEDULE

	WIRE
1	3 # 1/0 AWG, #6 GRND, 1 1/2" C
2	4 # 4/0 AWG, #4 GRND, 2 1/2" C

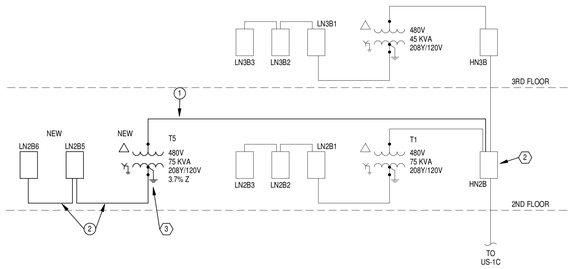

2 **B330 - PARTIAL SINGLE-LINE DIAGRAM**
SCALE: NONE

Revisions		Date
1	35% Schematic Design	03.05.2015
2	65% Design Development	04.28.2015
3	95% Owner Review	08.14.2015
4	100% Construction Documents	11.04.2015
5	Bid Set Drawings	01.15.2016

CONSULTANTS:

Heapy Engineering
MEP Design Technology Planning Commissioning Energy
Nationally Recognized Leader in Sustainability
1400 W Dorothy Lane, Dayton, OH 45409-1310
Ph 937-224-0861 Fax 937-224-5777 www.heapy.com
Heapy Project No.: 2014-04034 Firm License No.: 01528

STATE OF OHIO
GARY S. EODICE
E-52755
REGISTERED
PROFESSIONAL ENGINEER

ARCHITECT/ENGINEERS:

JOHN POE ARCHITECTS
3131 NEWMARK DRIVE, SUITE 200
MIAMISBURG, OHIO 45342
937 461 3290 PHONE
jpa@johnpoe.com

Drawing Title: SINGLE LINE DIAGRAM

Approved: Project Director

Project Title: RELOCATE PROSTHETICS AND PODIATRY CLINICS

Location: Dayton, Ohio

Date: 05.16.2016 | Checked: MSG | Drawn: SC

Project No. VA Project No. 552-15-502 JPA Project No. 14006.00

Building Number: 999

Drawing Number: E601

Dwg. of

Office of Construction and Facilities Management
Department of Veterans Affairs

5/13/2016 11:33:15 AM

FULLY SPRINKLERED

FRAME: ALUMINUM EXTRUSION, HIGHLY REFLECTIVE INNER REFLECTOR, MATTE WHITE. 24" DIAMETER, AIRCRAFT CABLE HUNG. HANG FOR SINGLE POINT CANOPY.

LAMPS: LED 24W, 4000K, 277V, 1160 LUMENS, 85 CRI.

DRIVER: REMOTE MOUNTED ABOVE IN CANOPY.

DISTRIBUTION: DIRECT/INDIRECT.

CABLE MOUNTED CHANDELIER

P / 3

SPECIFICATION GRADE WALL MOUNTED LIGHTING FIXTURE.

HOUSING: EXTRUDED ALUMINUM HOUSING WITH PERFORATED VERTICAL CURVED FACIA. SEPARATE NON-CAPTIVE STUD FOR FIXTURE GROUNDING.

REFLECTOR: HIGH REFLECTANCE STEEL OR ALUMINUM, MIN 85% REFLECTANCE.

FINISH: MULTI-STAGE PHOSPHATE BONDING TREATMENT AND WHITE BAKED ENAMEL.

4,000K (DLC) 100,000 HOUR AT L70 WITH 120/277V LED DRIVER, 37 WATTS.

EW1: NOMINAL 48" IN LENGTH.
EW1a: NOMINAL 24" IN LENGTH.

LED VANITY LUMINAIRE

W / 1

HOUSING: STANDARD

SHADE: RESIN, STYLE LINEAR CROSS

LAMP: 3,000K, 1,100 LUMEN LED, DAMP LISTED 120/277V, 9.6 W.

LED WALL SCONCE

W / 3

SPECIFICATION GRADE RECESSED FLUORESCENT LIGHTING TROFFER WITH FLAT LOW-BRIGHTNESS LENS PANEL, NOMINAL 2' X 4' IN SIZE AND APPROXIMATELY 4.25 INCHES DEEP.

HOUSING: DIE FORMED AND EMBOSSED CODE GAUGE STEEL. END CAPS HINGED AND SCREWED TO HOUSING FOR RIGIDITY. DESIGNED FOR INSTALLATION IN CEILING TYPE SHOWN ON ARCHITECTURAL DRAWINGS. INTEGRAL T-BAR CLIPS. HARDWARE FOR MINIMUM 4 POINTS OF SUPPORT. SEPARATE NON-CAPTIVE STUD FOR FIXTURE GROUNDING.

REFLECTOR: HIGH REFLECTANCE BAKED WHITE ENAMEL AND SPECULAR SILVER INSERT.

FINISH: MULTI-STAGE PHOSPHATE BONDING TREATMENT AND HIGH REFLECTANCE BAKED WHITE ENAMEL.

SHIELDING: 100% PRISMATIC VIRGIN ACRYLIC, PATTERN 12, .125" THICK (NOMINAL). FLUSH DOOR WITH MITRED CORNERS, INCONSPICUOUS CAM ACTION LATCHES.

LAMPS: 4,000K (DLC) 60,000 HOURS AT L70 WITH 120/277V DRIVER at 4200 LUMENS.

RECESSED FLUORESCENT FIXTURE

B / 2

SPECIFICATION GRADE SURFACE MOUNTED,LED, BI-LEVEL LIGHT WITH CURVED LOW-BRIGHTNESS LENS PANEL, NOMINAL 6" X 4' IN SIZE AND APPROXIMATELY 4" DEEP.

HOUSING: WHITE ALUMINUM 0.032" THICK FIXTURE BODY.

LENS: ACRYLIC LENS WITH LINEAR REFRACTIVE PATTERN.

OCCUPANCY SENSOR: INTERNALLY MOUNTED PASSIVE INFRARED OCCUPANCY SENSOR. FAIL-SAFE FEATURE TO SHUNT LIGHT LEVELS TO 100%. SENSOR SHALL HAVE TIME AND MOTION ADJUSTABILITY.

4,000K (DLC) 50,000 HOUR AT L70 WITH STEP DIMMING DRIVER. 120/277V, 50WATTS.

LED STAIRWELL LUMINAIRE

W / 2

HOUSING AND CANOPY: CAST ALUMINUM.

DOOR FRAME: HINGED WITH ALUMINUM REINFORCED POLYCARBONATE SHIELD.

FINISH: PAINTED BLACK, DIE-CAST ALUMINUM.

INSCRIPTION PANEL(S): RED L.E.D. 6" LETTERS

LAMPS: MULTIPLE L.E.D. LAMP ASSEMBLY WITH 10 YEAR LED LIFE

VARIATIONS: TYPE EX2 DENOTE DOUBLE FACED FIXTURES. FURNISHED FIXTURES WITH DIRECTIONAL ARROWS WHERE SHOWN ON DRAWINGS AND WIRED FOR 120/277-VOLT OPERATION AS INDICATED.

LOCATION: CEILING MOUNT WHERE SHOWN. WALL MOUNT AT 7'-4" AFF WHERE SHOWN UNLESS OTHERWISE NOTED.

TOP MOUNTED EXIT LIGHT

X / 1

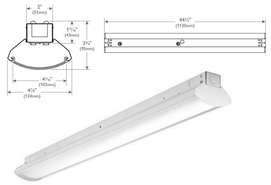

LOW PROFILE, HIGH PERFORMING LED LINEAR LUMINAIRE WITH REFLECTOR.

BODY: HEAVY GAUGE COLD ROLLED STEEL HOUSING AND LED PAN WITH POLYCARBONATE INJECTION MOLDED ENDCAPS. CAPABLE OF CHAIN HUNG MOUNTING. FULLY ENCLOSED WIRING AND LED DIODES

LENS: PERFORATED REFLECTOR SHALL PROVIDE 10% UPLIGHT. RUGGED 100% FROST ACRYLIC LENS. ENCLOSED LENS PREVENTS PENETRATION OF DUST, INSECTS AND OTHER DEBRIS INTO THE LAMP COMPARTMENT.

ELECTRIC: 120/277V, 80+ CRI. LED BOARDS AND DRIVERS ARE RoHS (RESTRICTION OF HAZARDOUS SUBSTANCES) COMPLIANT. TOTAL SYSTEM LIFE SHALL BE RATED FOR 50,000 HOURS (L80). 3,700 LUMENS PER 4FT LENGTH. 44 TOTAL WATTS PER 4FT. LENGTH. 4000K COLOR TEMP.

CHAIN MOUNT FIXTURE AT 8'-0".

LED INDUSTRIAL FIXTURE

C / 1

Revisions		Date
1	35% Schematic Design	03.05.2015
2	65% Design Development	04.28.2015
3	95% Owner Review	08.14.2015
4	100% Construction Documents	11.04.2015
5	Bid Set Drawings	01.15.2016

5/13/2016 11:33:18 AM

CONSULTANTS:

Heapy Engineering
MEP Design Technology Planning Commissioning Energy
Nationally Recognized Leader in Sustainability
1400 W Dorothy Lane, Dayton, OH 45409-1310
Ph 937-224-0861 Fax 937-224-5777 www.heapy.com
Heapy Project No.: 2014-04034 Firm License No.: 01528

STATE OF OHIO
GARY S. EODICE
E-52755
REGISTERED PROFESSIONAL ENGINEER

ARCHITECT/ENGINEERS:

JOHN POE ARCHITECTS
3131 NEWMARK DRIVE, SUITE 200
MIAMISBURG, OHIO 45342
937 461 3290 PHONE
jpa@johnpoe.com

Drawing Title: LIGHTING DESCRIPTIONS

Approved: Project Director

Project Title: RELOCATE PROSTHETICS AND PODIATRY CLINICS

Location: Dayton, Ohio

Date: 05.16.2016 | Checked: MSG | Drawn: JRS

Project No. VA Project No. 552-15-502 JPA Project No. 14006.00

Building Number: 999

Drawing Number: E602

Dwg. of

Office of Construction and Facilities Management

Department of Veterans Affairs

FULLY SPRINKLERED

HOUSING: DIE-CAST ALUMINUM QUARTER SPHERE DOWN LIGHT.

FINISH: POWDER COAT FINISH BRONZE FINISH.

LAMPS: LED-30, 3000K 2375 LUMENS, 774,000 HOURS @ L70, 25° C.

LENS: TYPE IV.

OPERATING TEMPERATURE: -22° F TO 104° F.

ELECTRICAL: 277V, 350mA DRIVE CURRENT.

CONTROL: ON BOARD PHOTOCELL.

WALL LIGHT — K / 1-x

HOUSING: POLYMER EXTRUDED HOUSING.

LENS: CLEAR POLY CARBONATE LENS

FINISH: WHITE

AIMING: ADJUSTABLE 81 DEGREES LEFT & RIGHT PIVOTS IN 9 DEGREE INCREMENTS.

LAMPS: LED 350K, 1265 DELIVERED LUMENS. 100,000 HOURS LUMEN MAINTENANCE (L70 @ 25° C.)

LENGTH: 12" NOMINAL

ELECTRICAL: 277V, QUICK CONNECT RECEPTACLE & PLUGS ON EACH FIXTURE FOR END-TO END MOUNTING.

COVE LIGHT - LUMINAIRE — D / 1-x

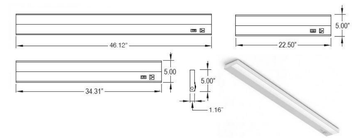

LENGTH OF FIXTURE(S): REFER TO PLANS

HOUSING: 20 GAUGE FORMED COLD ROLLED STEEL HOUSING SEAMED WELDED AND GROUND SMOOTH.

LENS: 0.125" THICK PRISMATIC ACRYLIC

ELECTRONICS: CONSTANT CURRENT LED DRIVER.

LED 4' - 1 ROW, 15 WATTS
LED 2' - 1 ROW, 8 WATTS

LED COLOR: 4000 K

VOLTAGE: 277V

FINISH: WHITE ANTIMICROBIAL FINISH FOLLOWING AN IRON PHOSPHATE PRE-TREATMENT.

CONTROLLED VIA ADJACENT WALL SWITCH

UC2 - 24"
UC3 - 36"
UC4 - 48"

LOW PROFILE LED UNDER CABINET LIGHT — U / C-x

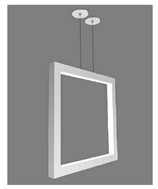

STYLE: ILLUMINATED FRAME.

HOUSING: SOLID 6063 - T5 EXTENDED ALLOY PROFILE. WHITE FINISH 2' NOMINAL SQUARE.

REFLECTOR: INTEGRATED 18 A ALUMINUM, HIGH REFLECTANCE WHITE FINISH.

LENS: WHITE OPAL.

OPTIONS: P3a INSIDE FACE LIGHTED.
P3b OUTSIDE FACE LIGHTED.

MOUNTING: STRAIGHT TWIN CABLE.

LAMPS: LED, 110lm/ft 3500K.

ELECTRICAL: 277V REMOTE DRIVER.

FRAME LUMINAIRE — P / 3-X

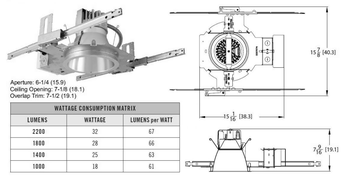

WATTAGE CONSUMPTION MATRIX		
LUMENS	WATTAGE	LUMENS per WATT
2200	32	67
1800	28	66
1400	25	63
1000	18	61

SPECIFICATION GRADE LED RECESSED CLEAR LENSED DOWNLIGHT,

MECHANICAL:
1. ONE-PIECE 16 GAUGE GALVANIZED STEEL CONSTRUCTION. TELESCOPIC MOUNTING BARS MAXIMUM OF 32" WITH 4" VERTICAL ADJUSTMENT.
2. LIGHT ENGINE AND DRIVER SHALL BE ACCESSIBLE THRU APERTURE.
3. WET LOCATION LISTING

OPTICAL:
1. SELF-FLANGED, SEMI-SPECULAR LOWER REFLECTOR.
2. 45 DEG CUTOFF TO SOURCE AND SOURCE IMAGE.

ELECTRICAL:
1. LED LIGHT ENGINE SHALL PRODUCE 60,000 HOURS AT 70% LUMEN MAINTENANCE.
2. FULLY SERVICABLE AND UPGRADEABLE LENSED LED LIGHT ENGINE.
3. 120V WITH 0-10V DIMMING (10-100%); RATED FOR 50,000 HOURS.

EN1 - 1400 LUMENS
EN2 - 1000 LUMENS, PROVIDE LENS AND WET LOCATION LISTING.
EN3 - 1000 LUMENS

RECESSED LED ROUND DOWNLIGHT — E / N-x

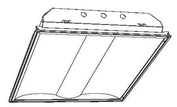

RECESS, LED LIGHTING TROFFER WITH CURVED LUMINOUS HIGH EFFICIENCY LENS PANEL, NOMINAL 2' x 2 ' IN SIZE AND APPROX 3 3/8" DEEP.

<u>HOUSING:</u> STEEL A MINIMUM OF 0.035-INCH THICK; APPROPRIATE HARDWARE FOR A MINIMUM OF (4) POINTS OF SUPPORT IN APPLICABLE CALLING SYSTEM; WIRING AND BALLAST ACCESSIBLE FROM BELOW; SUPPORT CLIPS PROVIDED FOR WIRING; SEPARATE CAPTIVE NON-TURNING STUD FOR FIXTURE GROUNDING. PROVIDE FLANGE KIT WHERE NOTED ON DRAWINGS.

<u>OPTICS:</u> S/MH OF 1.3, FIXTURE EFFICEINCY MINIMUM 85.2%.

<u>LAMPS:</u> 4,000K (DLC) 50,000 HOUR AT L70 120/277V 0-10V DIMMING DRIVER.

<u>FINISH:</u> HOUSING, DOOR AND TRIM FRAME-BAKED WHITE ENAMEL; REFLECTING SURFACES MINIMUM OF 85% REFLECTANCE BAKED WHITE ENAMEL.

<u>VARIATIONS:</u>

<u>TYPE "B1":</u> SAME AS ABOVE, EXCEPT 2'x2' LED, 2400 LUMEN.

<u>TYPE "B1a"</u> SAME AS ABOVE, EXCEPT 2'x2' LED, 3800 LUMEN.

<u>TYPE "B1b":</u> SAME AS ABOVE, EXCEPT 2'x4' IN SIZE, 6300 LUMEN.

RECESSED HIGH EFFICIENCY LED FIXTURE — B / 1-X

Revisions		Date
1	35% Schematic Design	03.05.2015
2	65% Design Development	04.28.2015
3	95% Owner Review	08.14.2015
4	100% Construction Documents	11.04.2015
5	Bid Set Drawings	01.15.2016

CONSULTANTS:

Heapy Engineering
MEP Design Technology Planning Commissioning Energy
Nationally Recognized Leader in Sustainability
1400 W Dorothy Lane, Dayton, OH 45409-1310
Ph 937-224-0861 Fax 937-224-5777 www.heapy.com
Heapy Project No.: 2014-04034 Firm License No.: 01528

STATE OF OHIO — GARY S. EODICE E-52755 — REGISTERED PROFESSIONAL ENGINEER

ARCHITECT/ENGINEERS:

JOHN POE ARCHITECTS
3131 NEWMARK DRIVE, SUITE 200
MIAMISBURG, OHIO 45342
937 461 3290 PHONE
jpa@johnpoe.com

Drawing Title: LIGHTING DESCRIPTIONS

Approved: Project Director

Project Title: RELOCATE PROSTHETICS AND PODIATRY CLINICS

Location: Dayton, Ohio

Date: 05.16.2016 | Checked: MSG | Drawn: JRS

Project No. VA Project No. 552-15-502 JPA Project No. 14006.00

Building Number: 999

Drawing Number: E603

Dwg. of

Office of Construction and Facilities Management

Department of Veterans Affairs

5/13/2016 11:33:22 AM

FULLY SPRINKLERED

Panel: EM1

Location: Space 58 **Mounting:** Surface **A.I.C. Rating:** 14,000
Supply From: **Enclosure:** Type 1 **Mains Type:** MLO
Voltage: 480/277 Wye-3PH-4W **Mains Rating:** 100 A

CKT	Circuit Description	Trip	Poles	A		B		C		Poles	Trip	Circuit Description	CKT
1	New Spare	20 A	1	0 VA	0 VA					1	20 A	New Spare	2
3	New Spare	20 A	1			0 VA	0 VA			1	20 A	Exist.	4
5	New Spare	20 A	1					0 VA	0 VA	1	20 A	Exist.	6
7	Exist.	20 A	1	0 VA	0 VA					1	20 A	Exist.	8
9	Exist.	20 A	1			0 VA	995 VA			1	20 A	Lighting	10
11	Emer/Exit Lts	20 A	1					1250...	997 VA	1	20 A	Lighting	12
13	Lighting	20 A	1	384 VA	0 VA					1	20 A	Spare	14
15	Spare	20 A	1			0 VA	0 VA			1	20 A	Spare	16
17	Space	--	--					0 VA	0 VA	--	--	Space	18
19	Space	--	--	0 VA	0 VA					--	--	Space	20
21	Space	--	--			0 VA	0 VA			--	--	Space	22
23	Space	--	--					0 VA	0 VA	--	--	Space	24
25	Space	--	--	0 VA	0 VA					--	--	Space	26
27	Space	--	--			0 VA	0 VA			--	--	Space	28
29	Space	--	--					0 VA	0 VA	--	--	Space	30
		Total Load:		0.38 kVA		1.00 kVA		2.25 kVA					

Notes:

TOTAL CONNECTED		ESTIMATED DEMAND
3.63 kVA		

Panel: 1C

Location: Corridor C-2-5 **Mounting:** Surface **A.I.C. Rating:** 10,000A
Supply From: **Enclosure:** Type 1 **Mains Type:** MCB
Voltage: 120/208 Wye-3PH-4W **Mains Rating:** 100 A

CKT	Circuit Description	Trip	Poles	A		B		C		Poles	Trip	Circuit Description	CKT
1	Receptacle	20 A	1	540 VA	1260...					1	20 A	Receptacle	2
3	WTR COOLER	20 A	1			500 VA	0 VA			1	20 A	R	4
5	Receptacle	20 A	1					900 VA	0 VA	1	20 A	Receptacle	6
7	Receptacle	20 A	1	0 VA	180 VA					1	20 A	Receptacle	8
9	Spare	20 A	1			0 VA	0 VA			1	20 A	Spare	10
11	Receptacle	20 A	1					0 VA	900 VA	1	20 A	Receptacle	12
13	Spare	20 A	1	0 VA	0 VA					1	20 A	Receptacle	14
15	Receptacle	20 A	1			0 VA	0 VA			1	20 A	Spare	16
17	R	20 A	1					0 VA	1500...	1	20 A	Refrig.	18
19	Receptacle	20 A	1	1620...	360 VA					1	20 A	Receptacle	20
21	M	20 A	1			0 VA	1500...			1	20 A	Receptacle	22
23	M	20 A	1					0 VA	0 VA	1	20 A	M	24
25	Receptacle	20 A	1	1500...	516 VA					1	20 A	L4	26
27	L6	20 A	1			1680...	480 VA			1	20 A	L5	28
29	Receptacle	20 A	1					900 VA	1680...	1	20 A	L6	30
31	Receptacle	20 A	1	1680...	516 VA					1	20 A	L14	32
33	L8	20 A	1			480 VA	480 VA			1	20 A	L5	34
35	L15	20 A	1					516 VA	540 VA	1	20 A	L16	36
37	L1	20 A	1	960 VA	720 VA					1	20 A	Receptacle	38
39	Spare	20 A	1			0 VA	0 VA			1	20 A	Spare	40
41	Spare	20 A	1					0 VA	0 VA	1	20 A	Spare	42
		Total Load:		9.85 kVA		5.12 kVA		6.94 kVA					

Notes:

TOTAL CONNECTED		ESTIMATED DEMAND
21.91 kVA		

Panel: 1B

Location: Electrical Room 495 **Mounting:** Surface **A.I.C. Rating:** 10,000A
Supply From: **Enclosure:** Type 1 **Mains Type:** MLO
Voltage: 120/208 Wye-3PH-4W **Mains Rating:** 225 A

CKT	Circuit Description	Trip	Poles	A		B		C		Poles	Trip	Circuit Description	CKT
1	R	20 A	1	0 VA	0 VA					1	20 A	L	2
3	EF-215	20 A	1			672 VA	0 VA			1	20 A	R	4
5	R	20 A	1					0 VA	0 VA	1	20 A	R	6
7	R	20 A	1	0 VA	0 VA					1	20 A	R	8
9	R	20 A	1			0 VA	0 VA			1	20 A	Spare	10
11	Spare	20 A	1					0 VA	0 VA	1	20 A	R	12
13	R	20 A	1	0 VA	0 VA					1	20 A	R	14
15	R	20 A	1			0 VA	0 VA			1	20 A	C	16
17	C	20 A	1					0 VA	0 VA	1	20 A	R	18
19	C	20 A	1	0 VA	0 VA					1	20 A	C	20
21	R	20 A	1			0 VA	0 VA			1	20 A	C	22
23	C	20 A	1					0 VA	0 VA	1	20 A	C	24
25	C	20 A	1	0 VA	0 VA					1	20 A	C	26
27	C	20 A	1			0 VA	696 VA			1	20 A	EF-2	28
29	C	20 A	1					0 VA	0 VA	1	20 A	Spare	30
31	Spare	20 A	1	0 VA	0 VA					1	20 A	Spare	32
33	Spare	20 A	1			0 VA	0 VA			1	20 A	Spare	34
35	Space	--	--					0 VA	0 VA	--	--	Space	36
37	Space	--	--	0 VA	0 VA					--	--	Space	38
39	Space	--	--			0 VA	0 VA			--	--	Space	40
41	Space	--	--					0 VA	0 VA	--	--	Space	42
		Total Load:		0.00 kVA		1.37 kVA		0.00 kVA					

Notes:

TOTAL CONNECTED		ESTIMATED DEMAND
1.37 kVA		

Panel: 1A

Location: Electrical Room 495 **Mounting:** Surface **A.I.C. Rating:** 10,000A
Supply From: **Enclosure:** Type 1 **Mains Type:** MLO
Voltage: 120/208 Wye-3PH-4W **Mains Rating:** 225 A

CKT	Circuit Description	Trip	Poles	A		B		C		Poles	Trip	Circuit Description	CKT
1	Exist	20 A	1	0 VA	0 VA					1	20 A	Exist	2
3	R	20 A	1			0 VA	0 VA			1	20 A	R	4
5	R	20 A	1					0 VA	0 VA	1	20 A	R	6
7	Exist	20 A	1	0 VA	0 VA					1	20 A	R	8
9	R	20 A	1			0 VA	0 VA			1	20 A	R	10
11	Exist	20 A	1					0 VA	0 VA	1	20 A	R	12
13	R	20 A	1	0 VA	0 VA					1	20 A	R	14
15	Receptacle	20 A	1			900 VA	0 VA			1	20 A	Spare	16
17	WTR COOLER	20 A	1					500 VA	0 VA	1	20 A	Spare	18
19	Exist	20 A	1	0 VA	0 VA					1	20 A	Spare	20
21	R	20 A	1			0 VA	560 VA			1	20 A	Receptacle	22
23	R	20 A	1					0 VA	0 VA	1	20 A	R	24
25	R	20 A	1	0 VA	0 VA					1	20 A	Exist	26
27	M	20 A	1			0 VA	0 VA			1	20 A	Exist	28
29	R	20 A	1					0 VA	0 VA	1	20 A	Exist	30
31	R	20 A	1	0 VA	0 VA					1	20 A	Exist	32
33	R	20 A	1			0 VA	180 VA			1	20 A	Receptacle	34
35	R	20 A	1					0 VA	0 VA	1	0 A	Spare	36
37	Spare	0 A	1	0 VA	0 VA					1	0 A	Spare	38
39	Spare	0 A	1			0 VA	0 VA			1	0 A	Spare	40
41	Spare	0 A	1					0 VA	0 VA	1	0 A	Spare	42
		Total Load:		0.00 kVA		1.64 kVA		0.50 kVA					

Notes: DOUBLE LUGS

TOTAL CONNECTED		ESTIMATED DEMAND
2.14 kVA		

Panel: EM2

Location: Electrical Room 495 **Mounting:** Surface **A.I.C. Rating:** 10,000
Supply From: **Enclosure:** Type 1 **Mains Type:** MCB
Voltage: 120/208 Wye-3PH-4W **Mains Rating:** 100 A

CKT	Circuit Description	Trip	Poles	A		B		C		Poles	Trip	Circuit Description	CKT
1	M	20 A	1	0 VA	0 VA					1	20 A	M	2
3	Spare	20 A	1			0 VA	0 VA			1	20 A	Spare	4
5	L	20 A	1					0 VA	0 VA	1	20 A	M	6
7	Spare	20 A	1	0 VA	0 VA					1	20 A	Spare	8
9	Spare	0 A	1			0 VA	0 VA			1	20 A	Spare	10
11	L11	20 A	1					1560...	1020...	1	20 A	L9	12
13	L12	20 A	1	1560...	1896...					1	20 A	L10	14
15	ICE	20 A	1			1500...	100 VA			1	20 A	Elec. Lock	16
17	Spare	20 A	1					0 VA	0 VA	1	20 A	Spare	18
19	Spare	20 A	1	0 VA	0 VA					1	20 A	Spare	20
21	Spare	20 A	1			0 VA	0 VA			1	20 A	Spare	22
23	Spare	20 A	1					0 VA	0 VA	1	20 A	Spare	24
25	Space	--	--	0 VA	0 VA					--	--	Space	26
27	Space	--	--			0 VA	0 VA			--	--	Space	28
29	Space	--	--					0 VA	0 VA	--	--	Space	30
31	Space	--	--	0 VA	0 VA					--	--	Space	32
33	Space	--	--			0 VA	0 VA			--	--	Space	34
35	Space	--	--					0 VA	0 VA	--	--	Space	36
37	Space	--	--	0 VA	0 VA					--	--	Space	38
39	Space	--	--			0 VA	0 VA			--	--	Space	40
41	Space	--	--					0 VA	0 VA	--	--	Space	42
		Total Load:		3.46 kVA		1.60 kVA		2.58 kVA					

Notes:

TOTAL CONNECTED		ESTIMATED DEMAND
7.64 kVA		

Panel: HN2B

Location: ELECTRIC 172 **Mounting:** Surface **A.I.C. Rating:** 18,000
Supply From: **Enclosure:** Type 1 **Mains Type:** MCB
Voltage: 480/277 Wye-3PH-4W **Mains Rating:** 150 A

CKT	Circuit Description	Trip	Poles	A		B		C		Poles	Trip	Circuit Description	CKT
1	Lighting	20 A	1	1056...	1024...					1	20 A	Lighting	2
3	Lighting	20 A	1			384 VA	704 VA			1	20 A	Lighting	4
5	Lighting	20 A	1					640 VA	896 VA	1	20 A	Lighting	6
7	Lighting	20 A	1	320 VA	995 VA					1	20 A	Lighting	8
9	Lighting	20 A	1			849 VA	1900...			1	20 A	L	10
11	L	20 A	1					1500...	2000...	1	20 A	L	12
13	L	20 A	1	1700...	0 VA					1	20 A	L	14
15	L	20 A	1			1500...	2400...			1	20 A	L	16
17	L	20 A	1					1600...	2000...	1	20 A	L	18
19	Spare	20 A	1	0 VA	17400...					3	125 A	75kVA Xform	20
21	Spare	20 A	1			0 VA	17400...			--	--	--	22
23	Spare	20 A	1					0 VA	17400...	--	--	--	24
25	Space	--	--	0 VA	22287...			0 VA	17741...	3	125 A	LN2B5 75kVA Xform	26
27	Space	--	--			0 VA	18749...			--	--	--	28
29	Space	--	--					0 VA	17741...	--	--	--	30
		Total Load:		44.78 kVA		43.89 kVA		43.78 kVA					

Notes:

TOTAL CONNECTED		ESTIMATED DEMAND
134.67 kVA		115.7 kVA (139A)

Panel: 2A

Location: Electrical Room 495 **Mounting:** Surface **A.I.C. Rating:**
Supply From: **Enclosure:** Type 1 **Mains Type:** MLO
Voltage: 120/208 Wye-3PH-4W **Mains Rating:** 225 A

CKT	Circuit Description	Trip	Poles	A		B		C		Poles	Trip	Circuit Description	CKT
1	Receptacle	20 A	1	720 VA	720 VA					1	20 A	Receptacle	2
3	Receptacle	20 A	1			720 VA	640 VA			1	20 A	Receptacle	4
5	Receptacle	20 A	1					720 VA	720 VA	1	20 A	Receptacle	6
7	Receptacle	20 A	1	720 VA	720 VA					1	20 A	Receptacle	8
9	Receptacle	20 A	1			720 VA	720 VA			1	20 A	Receptacle	10
11	Receptacle	20 A	1					900 VA	900 VA	1	20 A	Receptacle	12
13	Receptacle	20 A	1	720 VA	720 VA					1	20 A	Receptacle	14
15	Receptacle	20 A	1			720 VA	720 VA			1	20 A	Receptacle	16
17	Receptacle	20 A	1					720 VA	720 VA	1	20 A	Receptacle	18
19	Receptacle	20 A	1	720 VA	900 VA					1	20 A	Receptacle	20
21	Receptacle	20 A	1			720 VA	720 VA			1	20 A	Receptacle	22
23	Receptacle	20 A	1					720 VA	900 VA	1	20 A	Receptacle	24
25	Receptacle	20 A	1	720 VA	900 VA					1	20 A	Receptacle	26
27	Receptacle	20 A	1			720 VA	720 VA			1	20 A	Receptacle	28
29	Receptacle	20 A	1					540 VA	720 VA	1	20 A	Receptacle	30
31	Receptacle	20 A	1	720 VA	1000...					1	20 A	Copier	32
33	Receptacle	20 A	1			900 VA	1000...			1	20 A	Copier	34
35	Receptacle	20 A	1					900 VA	900 VA	1	20 A	Receptacle	36
37	Receptacle	20 A	1	360 VA	1500...					1	20 A	Micro.	38
39	Receptacle	20 A	1			540 VA	720 VA			1	20 A	Receptacle	40
41	Receptacle	20 A	1					360 VA	1500...	1	20 A	Receptacle	42
43	Spare	20 A	1	0 VA	0 VA					1	20 A	Spare	44
45	Spare	20 A	1			0 VA	0 VA			1	20 A	Spare	46
47	Space	--	--					0 VA	0 VA	--	--	Space	48
49	Space	--	--	0 VA	0 VA					--	--	Space	50
51	Space	--	--			0 VA	0 VA			--	--	Space	52
53	Space	--	--					0 VA	0 VA	--	--	Space	54
		Total Load:		11.14 kVA		10.28 kVA		11.22 kVA					

Notes:

TOTAL CONNECTED		ESTIMATED DEMAND
32.64 kVA		21.32 kVA (59 A)

Panel: AA

Location: Electrical Room 495 **Mounting:** Surface **A.I.C. Rating:** 18,000A
Supply From: **Enclosure:** Type 1 **Mains Type:** MLO
Voltage: 480/277 Wye-3PH-4W **Mains Rating:** 225 A

CKT	Circuit Description	Trip	Poles	A		B		C		Poles	Trip	Circuit Description	CKT
1	Lighting	20 A	1	960 VA	1344...					1	20 A	Lighting	2
3	Spare	0 A	1			0 VA	1472...			1	20 A	Lighting	4
5	L	20 A	1					0 VA	0 VA	1	20 A	L	6
7	L	20 A	1	0 VA	0 VA					1	20 A	L	8
9	L	20 A	1			0 VA	0 VA			1	0 A	Spare	10
11									768 VA	1	20 A	Lighting	12
13	M	20 A	1	0 VA	0 VA					1	20 A	M	14
15	L	20 A	1			0 VA	896 VA			1	20 A	Lighting	16
17	Lighting	20 A	1					640 VA	2106...	3	20 A	EF-212	18
19	Lighting	20 A	1	1440...	2106...					--	--	--	20
21	Lighting	20 A	1			1201...	2106...			--	--	--	22
23	Spare	20 A	1					0 VA	2106...	3	20 A	EF-213	24
25	Spare	20 A	1	0 VA	2106...					--	--	--	26
27	Spare	20 A	1			0 VA	2106...			--	--	--	28
29	Spare	20 A	1					0 VA	0 VA	1	20 A	Spare	30
31	Spare	20 A	1	0 VA	0 VA					1	20 A	Spare	32
33	Space	--	--			0 VA	0 VA			--	--	Space	34
35	Space	--	--					0 VA	0 VA	--	--	Space	36
37	Space	--	--	0 VA	0 VA					--	--	Space	38
39	Space	--	--			0 VA	0 VA			--	--	Space	40
41	Space	--	--					0 VA	0 VA	--	--	Space	42
		Total Load:		7.96 kVA		7.78 kVA		5.62 kVA					

Notes:

TOTAL CONNECTED		ESTIMATED DEMAND
21.36 kVA		25.12 kVA (30 A)

Panel: LN2B5

Location: ELECTRIC 172 **Mounting:** Surface **A.I.C. Rating:** 10,000
Supply From: T5 **Enclosure:** Type 1 **Mains Type:** MCB
Voltage: 120/208 Wye-3PH-4W **Mains Rating:** 225 A

CKT	Circuit Description	Trip	Poles	A		B		C		Poles	Trip	Circuit Description	CKT
1	Receptacle	20 A	1	720 VA	1000...					1	20 A	Copier	2
3	Receptacle	20 A	1			540 VA	720 VA			1	20 A	Receptacle	4
5	Receptacle	20 A	1					1080...	720 VA	1	20 A	Receptacle	6
7	Receptacle	20 A	1	720 VA	720 VA					1	20 A	Receptacle	8
9	Refrigerator	20 A	1			1500...	720 VA			1	20 A	Receptacle	10
11	Receptacle	20 A	1					720 VA	540 VA	1	20 A	Receptacle	12
13	Receptacle	20 A	1	540 VA	540 VA					1	20 A	Receptacle	14
15	Receptacle	20 A	1			720 VA	720 VA			1	20 A	Receptacle	16
17	Receptacle	20 A	1					720 VA	720 VA	1	20 A	Receptacle	18
19	Receptacle	20 A	1	900 VA	720 VA					1	20 A	Receptacle	20
21	Receptacle	20 A	1			720 VA	900 VA			1	20 A	Receptacle	22
23	Receptacle	20 A	1					720 VA	900 VA	1	20 A	Receptacle	24
25	Receptacle	20 A	1	720 VA	540 VA					1	20 A	Receptacle	26
27	Receptacle	20 A	1			720 VA	360 VA			1	20 A	Receptacle	28
29	Receptacle	20 A	1					720 VA	900 VA	1	20 A	Receptacle	30
31	Receptacle	20 A	1	900 VA	900 VA					1	20 A	Receptacle	32
33	Spare	20 A	2			0 VA	720 VA			1	20 A	Receptacle	34
35	--	--	--					0 VA	180 VA	1	20 A	Receptacle	36
37	Microwave	20 A	1	1500...	450 VA					1	20 A	Receptacle	38
39	Spare	20 A	1			0 VA	0 VA			1	20 A	Spare	40
41	Spare	20 A	1					0 VA	0 VA	1	20 A	Spare	42
		Total Load:		10.87 kVA		8.34 kVA		7.92 kVA					

Notes: DOUBLE LUGS, FEEDS LN 2B6

TOTAL CONNECTED		ESTIMATED DEMAND
27.13 kVA		18.57 kVA (52 A)

Panel: LN2B6

Location: **Mounting:** Flush **A.I.C. Rating:** 10,000
Supply From: T5 **Enclosure:** Type 1 **Mains Type:** MLO
Voltage: 120/208 Wye-3PH-4W **Mains Rating:** 225 A

CKT	Circuit Description	Trip	Poles	A		B		C		Poles	Trip	Circuit Description	CKT
1	M31	20 A	1	1080...	1800...					1	20 A	M28	2
3	M5	20 A	1			888 VA	1920...			1	20 A	M116	4
5	M4	20 A	1					1056...	360 VA	1	20 A	Receptacle	6
7	Receptacle	20 A	1	360 VA	1560...					2	20 A	M22	8
9	Receptacle	20 A	1			180 VA	1560...			--	--	--	10
11	M13	20 A	1					1080...	1080...	1	20 A	M19	12
13	M12	20 A	1	1080...	1080...					1	20 A	Receptacle	14
15	M20	20 A	1			240 VA	720 VA			1	20 A	Receptacle	16
17	M11	20 A	1					1560...	540 VA	1	20 A	Receptacle	18
19	Receptacle	20 A	1	360 VA	180 VA					1	20 A	Receptacle	20
21	M25	20 A	3			1681...	696 VA			1	20 A	M16	22
23	--	--	--					1681...					24
25	--	--	--	1681...	685 VA					3	20 A	M2	26
27	Spare	20 A	1			0 VA	685 VA			--	--	--	28
29	Spare	20 A	1					0 VA	685 VA	--	--	--	30
31	Spare	20 A	1	0 VA	0 VA					1	20 A	Spare	32
33	Spare	20 A	1			0 VA	0 VA			--	--	Space	34
35	Space	--	--					0 VA	0 VA	--	--	Space	36
37	Space	--	--	0 VA	0 VA					--	--	Space	38
39	Space	--	--			0 VA	0 VA			--	--	Space	40
41	Space	--	--					0 VA	0 VA	--	--	Space	42
		Total Load:		9.87 kVA		8.57 kVA		8.04 kVA					

Notes:

TOTAL CONNECTED		ESTIMATED DEMAND
26.48 kVA		27.0 kVA (75A)

Panel: LN2B1

Location: ELECTRIC 172 **Mounting:** Surface **A.I.C. Rating:**
Supply From: **Enclosure:** Type 1 **Mains Type:** MCB
Voltage: 120/208 Wye-3PH-4W **Mains Rating:** 125 A

CKT	Circuit Description	Trip	Poles	A		B		C		Poles	Trip	Circuit Description	CKT
1	Receptacle	20 A	1	1720...	1080...					1	20 A	Receptacle	2
3	Receptacle	20 A	1			720 VA	900 VA			1	20 A	Receptacle	4
5	Receptacle	20 A	1					720 VA	720 VA	1	20 A	Receptacle	6
7	Receptacle	20 A	1	540 VA	900 VA					1	20 A	Receptacle	8
9	Receptacle	20 A	1			720 VA	720 VA			1	20 A	Receptacle	10
11	Receptacle	20 A	1					720 VA	720 VA	1	20 A	Receptacle	12
13	Copier	20 A	1	1000...	500 VA					1	20 A	WC	14
15	Receptacle	20 A	1			720 VA	720 VA			1	20 A	Receptacle	16
17	Receptacle	20 A	1					720 VA	720 VA	1	20 A	Receptacle	18
19	Receptacle	20 A	1	900 VA	900 VA					1	20 A	Receptacle	20
21	Receptacle	20 A	1			1080...	720 VA			1	20 A	Receptacle	22
23	Receptacle	20 A	1					720 VA	720 VA	1	20 A	Receptacle	24
25	Receptacle	20 A	1	720 VA	720 VA					1	20 A	Receptacle	26
27	Copier	20 A	1			1000...	720 VA			1	20 A	Receptacle	28
29	Receptacle	20 A	1					360 VA	936 VA	2	20 A	M29	30
31	Spare	20 A	1	0 VA	936 VA					--	--	--	32
33	Spare	20 A	1			0 VA	0 VA			1	20 A	Spare	34
35	Spare	20 A	1					0 VA	0 VA	1	20 A	Spare	36
37	Space	--	--	0 VA	0 VA					--	--	Space	38
39	Space	--	--			0 VA	0 VA			--	--	Space	40
41	Space	--	--					0 VA	0 VA	--	--	Space	42
		Total Load:		9.92 kVA		8.02 kVA		7.06 kVA					

Notes:

TOTAL CONNECTED		ESTIMATED DEMAND
24.99 kVA		17.5 kVA (49 A)

Revisions		Date
1	35% Schematic Design	03.05.2015
2	65% Design Development	04.28.2015
3	95% Owner Review	08.14.2015
4	100% Construction Documents	11.04.2015
5	Bid Set Drawings	01.15.2016

CONSULTANTS:

Heapy Engineering
MEP Design Technology Planning Commissioning Energy
Nationally Recognized Leader in Sustainability
1400 W Dorothy Lane, Dayton, OH 45409-1310
Ph 937-224-0861 Fax 937-224-5777 www.heapy.com
Heapy Project No.: 2014-04034 Firm License No.: 01528

STATE OF OHIO — GARY S. EODICE E-52755 — REGISTERED PROFESSIONAL ENGINEER

ARCHITECT/ENGINEERS:

JOHN POE ARCHITECTS
3131 NEWMARK DRIVE, SUITE 200
MIAMISBURG, OHIO 45342
937 461 3290 PHONE
jpa@johnpoe.com

Drawing Title: PANELBOARD SCHEDULES

Approved: Project Director

Project Title: RELOCATE PROSTHETICS AND PODIATRY CLINICS

Location: Dayton, Ohio

Date: 05.16.2016 Checked: MSG Drawn: JB

Project No. VA Project No. 552-15-502 JPA Project No. 14006.00

Building Number: 999

Drawing Number: E604 Dwg. of

Office of Construction and Facilities Management
Department of Veterans Affairs

5/13/2016 11:33:29 AM

FULLY SPRINKLERED

Panel: A

Location: Space 58
Supply From:
Voltage: 120/208 Wye-3PH-4W
Mounting: Surface
Enclosure: Type 1
A.I.C. Rating: 10,000
Mains Type: MLO
Mains Rating: 200 A

CKT	Circuit Description	Trip	Poles	A		B		C		Poles	Trip	Circuit Description	CKT
1	Exist.	20 A	1	0 VA	0 VA					1	20 A	Exist.	2
3	Recept.	20 A	1			1080...	1080...			1	20 A	Recept.	4
5	Recept.	20 A	1					900 VA	1260...	1	20 A	Recept.	6
7	Recept.	20 A	1	1360...	1260...					1	20 A	Recept.	8
9	Recept.	20 A	1			720 VA	1000...			1	20 A	CO2 Manifold	10
11	Recept.	20 A	1					540 VA	1000...	1	20 A	Bed	12
13	Recept.	20 A	1	1680...	360 VA					1	20 A	Recept.	14
15	Exist.	20 A	1			0 VA	1180...			1	20 A	Recept.	16
17	Recept.	20 A	1					720 VA	540 VA	1	20 A	Recept.	18
19	Exist.	20 A	1	0 VA	0 VA					1	20 A	Exist.	20
21	Exist.	20 A	1			0 VA	1260...			1	20 A	Recept.	22
23	Recept.	20 A	1					720 VA	1000...	1	20 A	Area Alarm Pnl.	24
25	Exist.	20 A	1	0 VA	0 VA					2	40 A	Exist.	26
27	Exist.	20 A	1			0 VA	0 VA			--	--	--	28
29	Recept.	20 A	1					1680...	1440...	1	20 A	Recept.	30
31	Recept.	20 A	1	1080...	1080...					1	20 A	Recept.	32
33	Recept.	20 A	1			540 VA	1220...			1	20 A	Recept.	34
35	Recept.	20 A	1					1200...	1220...	1	20 A	Recept.	36
37	Exist.	20 A	1	0 VA	0 VA					1	20 A	Exist.	38
39	Coiling Dr.	20 A	1			1200...	0 VA			2	40 A	Exist.	40
41	Recept.	20 A	1					1080...	0 VA	--	--	--	42
			Total Load:	6.82 kVA		9.28 kVA		13.30 kVA					

Notes: DOUBLE LUGS

TOTAL CONNECTED		ESTIMATED DEMAND
29.40 kVA		

Panel: B

Location: Space 10
Supply From:
Voltage: 120/208 Wye-3PH-4W
Mounting: Surface
Enclosure: Type 1
A.I.C. Rating: 22,000
Mains Type: MLO
Mains Rating: 225 A

CKT	Circuit Description	Trip	Poles	A		B		C		Poles	Trip	Circuit Description	CKT
1	Existing	20 A	1	0 VA	0 VA					1	20 A	Existing	2
3	Existing	2 A	1			0 VA	0 VA			1	20 A	Existing	4
5	Existing	2 A	1					0 VA	0 VA	1	20 A	Existing	6
7	Existing	20 A	3	0 VA	0 VA					3	20 A	Existing	8
9	--	--	--			0 VA	0 VA			--	--	--	10
11	--	--	--					0 VA	0 VA	--	--	--	12
13	Existing	20 A	1	0 VA	0 VA					1	20 A	Existing	14
15	Existing	20 A	1			0 VA	0 VA			1	20 A	Existing	16
17	Existing	20 A	1					0 VA	0 VA	1	20 A	Existing	18
19	Existing	20 A	1	0 VA	0 VA					1	20 A	Existing	20
21	Existing	20 A	1			0 VA	0 VA			1	20 A	Existing	22
23	Existing	20 A	1					0 VA	0 VA	1	20 A	Existing	24
25	Existing	20 A	1	0 VA	0 VA					1	20 A	Spare	26
27	Spare	20 A	1			0 VA	0 VA			1	20 A	Spare	28
29	Spare	20 A	1					0 VA	0 VA	1	20 A	Spare	30
31	Spare	20 A	1	0 VA	0 VA					1	20 A	Spare	32
33	Spare	20 A	1			0 VA	0 VA			1	20 A	Spare	34
35	Spare	20 A	1					0 VA	0 VA	1	20 A	Spare	36
37	Spare	20 A	1	0 VA	0 VA					1	20 A	Spare	38
39	Spare	20 A	1			0 VA	0 VA			1	20 A	Spare	40
41	Spare	20 A	1					0 VA	0 VA	1	20 A	Spare	42
			Total Load:	0.00 kVA		0.00 kVA		0.00 kVA					

Notes: DOUBLE LUGS

TOTAL CONNECTED		ESTIMATED DEMAND
0.00 kVA		

Panel: EM

Location: Space 58
Supply From:
Voltage: 120/208 Wye-3PH-4W
Mounting: Surface
Enclosure: Type 1
A.I.C. Rating: 10,000
Mains Type: MCB
Mains Rating: 225 A

CKT	Circuit Description	Trip	Poles	A		B		C		Poles	Trip	Circuit Description	CKT
1	Exist.	20 A	1	0 VA	0 VA					2	20 A	CRAC-1	2
3	Exist.	20 A	1			0 VA	0 VA			--	--	--	4
5	Tech. Rm. Rec.	20 A	1					500 VA	0 VA	1	20 A	New Spare	6
7	Exist.	20 A	1	0 VA	180 VA					1	20 A	Recept.	8
9	Recept.	20 A	1			180 VA	0 VA			1	20 A	Exist.	10
11	Tech Rm. Rec.	20 A	1					500 VA	0 VA	1	30 A	Exist.	12
13	Exist.	20 A	1	0 VA	0 VA					3	20 A	New Spare	14
15	Tech. Rm. Rec.	20 A	1			500 VA	0 VA			--	--	--	16
17	Exist.	20 A	1					0 VA	0 VA	--	--	--	18
19	CU-1	20 A	2	1500...	0 VA					1	20 A	Exist.	20
21	--	--	--			0 VA	0 VA			1	20 A	Exist.	22
23	Exist.	20 A	1					0 VA	0 VA	1	20 A	Exist.	24
25	Spare	20 A	3	0 VA	0 VA					1	20 A	Exist.	26
27	--	--	--			0 VA	0 VA			1	20 A	Exist.	28
29	--	--	--					0 VA	0 VA	1	0 A	Exist.	30
			Total Load:	1.68 kVA		0.68 kVA		1.00 kVA					

Notes: Double Lugs

TOTAL CONNECTED		ESTIMATED DEMAND
3.36 kVA		

Panel: EM1

Location: Space 58
Supply From:
Voltage: 480/277 Wye-3PH-4W
Mounting: Surface
Enclosure: Type 1
A.I.C. Rating: 14,000
Mains Type: MLO
Mains Rating: 100 A

CKT	Circuit Description	Trip	Poles	A		B		C		Poles	Trip	Circuit Description	CKT
1	New Spare	20 A	1	0 VA	0 VA					1	20 A	New Spare	2
3	New Spare	20 A	1			0 VA	0 VA			1	20 A	Exist.	4
5	New Spare	20 A	1					0 VA	0 VA	1	20 A	Exist.	6
7	Exist.	20 A	1	0 VA	0 VA					1	20 A	Exist.	8
9	Exist.	20 A	1			0 VA	995 VA			1	20 A	Lighting	10
11	Emer/Exit Lts	20 A	1					1250...	997 VA	1	20 A	Lighting	12
13	Lighting	20 A	1	384 VA	0 VA					1	20 A	Spare	14
15	Spare	20 A	1			0 VA	0 VA			1	20 A	Spare	16
17	Space	--	--					0 VA	0 VA	--	--	Space	18
19	Space	--	--	0 VA	0 VA					--	--	Space	20
21	Space	--	--			0 VA	0 VA			--	--	Space	22
23	Space	--	--					0 VA	0 VA	--	--	Space	24
25	Space	--	--	0 VA	0 VA					--	--	Space	26
27	Space	--	--			0 VA	0 VA			--	--	Space	28
29	Space	--	--					0 VA	0 VA	--	--	Space	30
			Total Load:	0.38 kVA		1.00 kVA		2.25 kVA					

Notes:

TOTAL CONNECTED		ESTIMATED DEMAND
3.63 kVA		

Panel: GA

Location: Space 58
Supply From:
Voltage: 120/208 Wye-3PH-4W
Mounting: Surface
Enclosure: Type 1
A.I.C. Rating: 14,000
Mains Type: MLO
Mains Rating: 225 A

CKT	Circuit Description	Trip	Poles	A		B		C		Poles	Trip	Circuit Description	CKT
1	New Spare	20 A	1	0 VA	0 VA					1	20 A	New Spare	2
3	Lts	20 A	1			1240...	1240...			1	20 A	Lts	4
5	New Spare	20 A	1					0 VA	1300...	1	20 A	Lts	6
7	Lts	20 A	1	990 VA	1000...					1	20 A	Lts	8
9	Lts	20 A	1			1120...	680 VA			1	20 A	Lts	10
11	Lts	20 A	1					1550...	500 VA	1	20 A	Lts	12
13	Exist.	20 A	1	0 VA	0 VA					1	20 A	Spare	14
15	Spare	20 A	1			0 VA	0 VA			1	20 A	Spare	16
17	Spare	20 A	1					0 VA	0 VA	1	20 A	Spare	18
19	Space	--	--	0 VA	0 VA					--	--	Space	20
21	Space	--	--			0 VA	0 VA			--	--	Space	22
23	Space	--	--					0 VA	0 VA	--	--	Space	24
25	Space	--	--	0 VA	0 VA					--	--	Space	26
27	Space	--	--			0 VA	0 VA			3	70 A	Exist.	28
29	Space	--	--					0 VA	0 VA	--	--	--	30
31	Space	--	--	0 VA	0 VA					--	--	--	32
33	Space	--	--			0 VA	0 VA			--	--	Space	34
35	Space	--	--					0 VA	0 VA	--	--	Space	36
37	Space	--	--	0 VA	0 VA					--	--	Space	38
39	Space	--	--			0 VA	0 VA			--	--	Space	40
41	Space	--	--					0 VA	0 VA	--	--	Space	42
			Total Load:	1.99 kVA		4.28 kVA		3.35 kVA					

Notes: DOUBLE LUGS

TOTAL CONNECTED		ESTIMATED DEMAND
9.62 kVA		

MOTORS, STARTERS, DISCONNECTS & CONTROLS

	MOTOR											STARTER													DISCONNECT MEANS											CONTROL			FEEDER					
		CHARACTERISTICS								LOCATION				TYPE					LOCATION						TYPE						LOCATION														
MARK	NAMEPLATE	HORSEPOWER (HP)	LOAD (kVA)	120V-1PH	208V-1PH	208V-3PH	240V-1PH	240V-3PH	277V-1PH	480V-1PH	480V-3PH	ROOM NUMBER	ROOM NAME	NEMA SIZE	MANUAL	MAGNETIC	BUILT-IN MOTOR O.L.	2-SPEED	VFD	SEE NOTE	NEAR MOTOR	MOTOR CONT CENTER	EQUIP CONT PANEL	ROOM NUMBER	SEE NOTE	FURNISHED BY	DISC SWITCH	MANUAL STARTER	RECEPTACLE	FEEDER SW OR BREAKER	NEMA TYPE	DISC SIZE	FUSE SIZE	NEAR MOTOR	MOTOR CONT CENTER	EQUIP CONT PANEL	PANELBOARD	SEE NOTE	FURNISHED BY	INTERLOCK WITH MOTOR NO. BY E.C.	MANUAL AT STARTER	INTEGRAL WITH EQUIPMENT	FURNISHED BY	SEE NOTE	NUMBER OF CONDUCTORS	WIRE SIZE	GROUND SIZE	CONDUIT SIZE	SEE NOTE
EF-1	EXHAUST FAN	3/4	1.164							•			ROOF BLD 315			•										EXISTING	•						•					HC			HC		3	12	12	3/4	
EF-2	EXHAUST FAN	1/4	0.696	•									ROOF BLD 315														•						•						HC			HC		2	12	12	3/4	
EF-212	LAB EXHAUST FAN	5	6.319							•			ROOF BLD 315			•										EC	•						•					HC		•	EC		3	12	12	3/4	1
EF-213	LAB EXHAUST FAN	5	6.319							•			ROOF BLD 315			•										EC	•						•					HC		•	EC		3	12	12	3/4	1
EF-215	EXHAUST FAN	1/4	0.672	•									ROOF BLD 315														•						•						HC			HC		2	12	12	3/4	

NOTES:

1. CONNECT START SWITCH MOUNTED ON HOOD TO STARTER COIL.

Revisions		Date
1	35% Schematic Design	03.05.2015
2	65% Design Development	04.28.2015
3	95% Owner Review	08.14.2015
4	100% Construction Documents	11.04.2015
5	Bid Set Drawings	01.15.2016

5/13/2016 11:33:36 AM

CONSULTANTS:
Heapy Engineering
MEP Design Technology Planning Commissioning Energy
Nationally Recognized Leader in Sustainability
1400 W Dorothy Lane, Dayton, OH 45409-1310
Ph 937-224-0861 Fax 937-224-5777 www.heapy.com
Heapy Project No.: 2014-04034 Firm License No.: 01528

STATE OF OHIO GARY S. EODICE E-52755 REGISTERED PROFESSIONAL ENGINEER

ARCHITECT/ENGINEERS:
JOHN POE ARCHITECTS
3131 NEWMARK DRIVE, SUITE 200
MIAMISBURG, OHIO 45342
937 461 3290 PHONE
jpa@johnpoe.com

Drawing Title: PANELBOARD SCHEDULES

Approved: Project Director

Project Title: RELOCATE PROSTHETICS AND PODIATRY CLINICS

Location: Dayton, Ohio

Date: 05.16.2016 | Checked: MSG | Drawn: JB

Project No. VA Project No. 552-15-502 JPA Project No. 14006.00

Building Number: 999

Drawing Number: E605

Dwg. of

Office of Construction and Facilities Management

Department of Veterans Affairs

FULLY SPRINKLERED

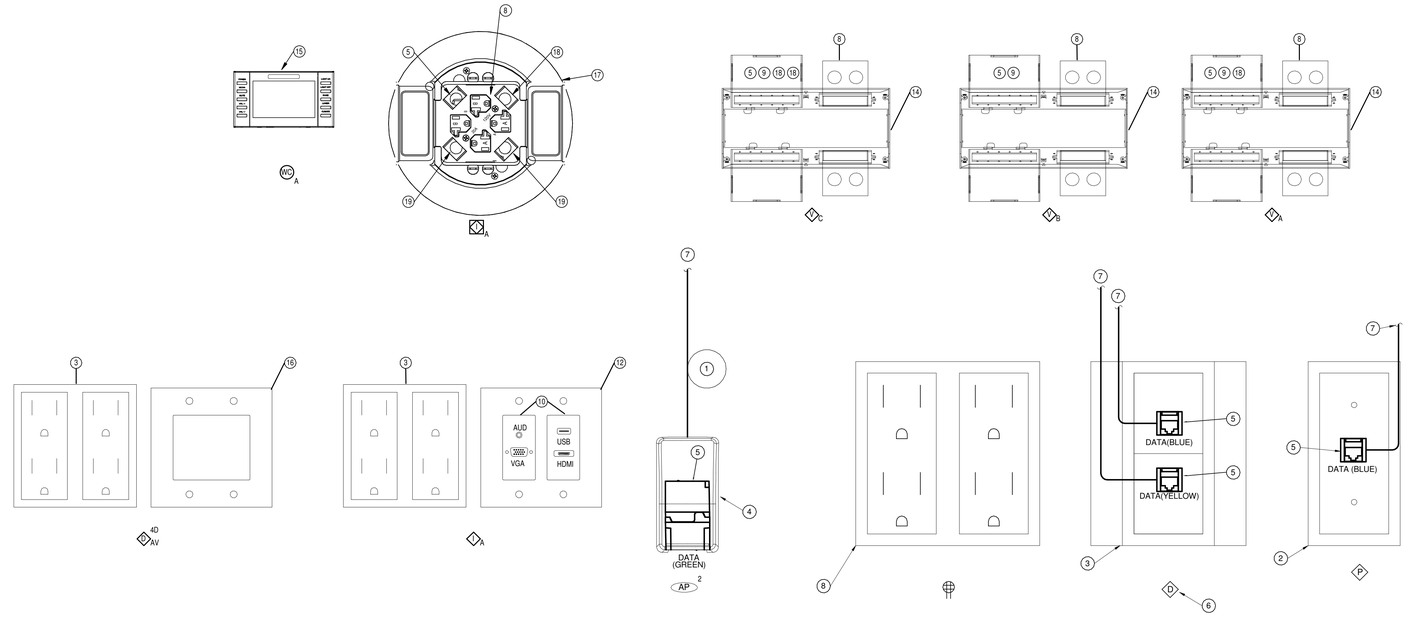

DETAIL NOTES

1. PROVIDE 20' SLACK CABLE IN MANAGED COIL FOR FIELD RELOCATION OF DEVICE.
2. 1-GANG 2 1/8" BOX (18" MH) WITH 0.75" CONDUIT TO ABOVE ACCESSIBLE CEILING. SUBSCRIPT "W" INDICATES WALL PHONE MOUNTING PLATE (46" MH). REFER TO DRAWINGS FOR MOUNTING HEIGHT.
3. 2-GANG 2 1/8" DEEP BOX (18" MH) WITH 1" CONDUIT TO ABOVE ACCESSIBLE CEILING. REFER TO DRAWINGS FOR ALTERNATE MOUNTING HEIGHT.
4. SURFACE MOUNT ASSEMBLY FOR UTP DATA JACK ABOVE ACCESSIBLE CEILING.
5. UTP DATA JACK WITH DATA CABLING TO LOCAL SIGNALS CLOSET.
6. DEFAULT OUTLET IS 2-DATA (1-BLUE/1-YELLOW). PROVIDE ALTERNATE CONFIGURATION IF INDICATED ON DRAWINGS.
7. RUN TO LOCAL DATA STATION CABLE TERMINATION EQUIPMENT IN LOCAL SIGNALS CLOSET.
8. ELECTRICAL OUTLET.
9. CATV COAXIAL TYPE "F" CONNECTOR WITH RG-6 TO LOCAL SIGNALS CLOSET.
10. TWISTED PAIR, MULTI-FORMAT AV TRANSMITTER, MOUNT IN STANDARD WALL BOX.
11. RUN TO LOCAL CATV DISTRIBUTION EQUIPMENT IN SIGNALS CLOSET.
12. 2-GANG, DEEP BOX WITH DRYWALL RING, 2-1"C. TO ABOVE CEILING.
13. 1-GANG 2 1/8" BOX (60" MH) WITH 0.75" CONDUIT TO ABOVE ACCESSIBLE CEILING AND FACEPLATE.
14. WALL MOUNTED FLAT PANEL SERVICE BOX WITH INTEGRATED POWER OUTLET AND AV CONNECTIVITY SECTIONS. PROVIDE 1.25" CONDUIT FOR AV AND 1" C. FOR DATA/CATV TO ABOVE CEILING. REFER TO AV SYSTEM DIAGRAMS FOR CABLING AND CONNECTIVITY REQUIREMENTS. PROVIDE 1-DATA AND 1-0CATV IN ALL BOXES. FSR MODEL PWB-200.
15. POVIDE CUSTOM WALL BOX FOR WALL MOUNTED AV TOUCH PANEL CONTROLLER. EXTEND 1"C. TO ABOVE CEILING.
16. PROVIDE 2-GANG, DEEP BOX WITH 2-1" CONDUITS, 4-DATA DROPS AND AV CABLING. REFER TO AV SYSTEM DIAGRAMS.
17. 6" CORE, FIRE RATED POKE THRU ASSEMBLY WITH CARPET FLANGE, POWER, DATA AND AV INSERTS. COORDINATE FINISH WITH VA. VERIFY EXACT LOCATION IN FIELD PRIOR TO INSTALLATION.
18. SHIELDED TWISTED PAIR RJ-45 CONNECTOR WITH CAT 6 SF/UTP CABLING TO LOCAL AV TWISTED PAIR RECEIVER/OUTLET.
19. BLANK INSERT.

1 TECHNOLOGY OUTLET ELEVATIONS

SCALE: NONE

DETAIL NOTES

1. REMOVE EXISTING CATV FIBER BACKBONE INCLUDING TERMINATION AT BOTH ENDS.
2. EXISTING BROADBAND AMPLIFIER TO BE RELOCATED TO BUILDING 340 EXISTING SIGNALS CLOSET.
3. REMOVE EXISTING CAT SPLITTER/TAP NETWORK.
4. REMOVE EXISTING CATV FEEDS TO CATV OUTLETS INDICATED BUILDING.
5. 2-TV OUTLETS IN LOBBY, BLDG 340, REMOVE STATION CABLING.
6. 1-TV OUTLET IN CLASSROOM 110, BLDG. 340, REMOVE STATION CABLING.
7. 1-TV OUTLET IN PHONE ROOM, BLDG. 321, REMOVE STATION CABLING.
8. 1-TV OUTLET IN CONFERENCE ROOM 171, BLDG. 340, REMOVE STATION CABLING.
9. 3-TV OUTLET IN WAITING, BLDG. 341, STATION CABLING TO BE MAINTAINED FROM OUTLET TO COMM CLOSET PCA 132A.

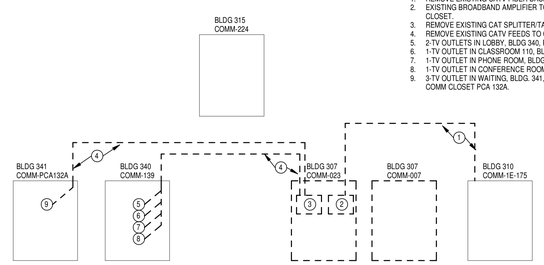

4 CATV DIAGRAM-DEMO

SCALE: NONE

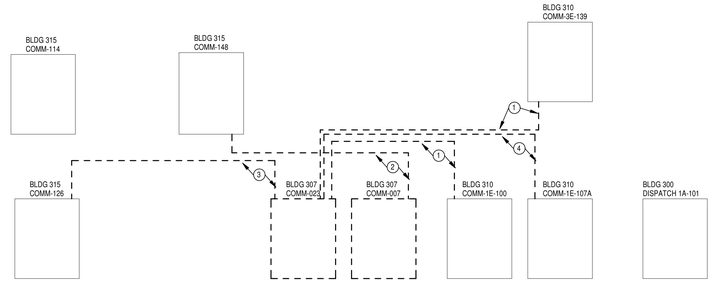

2 TECHNOLOGY VOICE/DATA BACKBONE DIAGRAM-DEMO

SCALE: NONE

DETAIL NOTES

1. REMOVE EXISTING FIBER BACKBONE, 12STRAND OM1 INCLUDING TERMINATION AT BOTH ENDS.
2. REMOVE EXISTING VOICE BACKBONE, 200 APIR INCLUDING TERMINATION AT BOTH ENDS.
3. REMOVE EXISTING FIBER BACKBONE, 6 STRAND OS1 INCLUDING TERMINATION AT BOTH ENDS.
4. REMOVE EXISTING FIBER BACKBONE, 12STRAND OM1 INCLUDING TERMINATION AT BOTH ENDS. REMOVE EXISTING VOICE BACKBONE, 100 APIR INCLUDING TERMINATION AT BOTH END

DETAIL NOTES

1. 0.500" HARDLINE BACKBONE.
2. RELOCATED BROADBAND AMPLIIER FROM BUILDING 307.
3. NEW DIRECTIONAL COUPLER
4. NEW SPLITTER/TAP NETWORK.
5. RE-CABLED CATV FEEDS TO EXISTING CATV OUTLETS INDICATED BUILDING.
6. 2-TV OUTLETS IN LOBBY, BLDG 340, PROVIDE NEW STATION CABLING.
7. 1-TV OUTLET IN CLASSROOM 110, BLDG. 340, PROVIDE NEW STATION CABLING.
8. 1-TV OUTLET IN PHONE ROOM, BLDG. 321, PROVIDE NEW STATION CABLING.
9. 1-TV OUTLET IN CONFERENCE ROOM 171, BLDG. 340, PROVIDE NEW STATION CABLING.
10. 3-TV OUTLET IN WAITING, BLDG. 341, STATION CABLING TO BE MAINTAINED FROM OUTLET TO COMM CLOSET PCA 132A. PROVIDEW NEW SPLITTER/TAP NETWORK AND RECONNECT EXISTING DROPS.
11. NEW TV OUTLETS. PROVIDE RG-6 DROPS HOMERUN TO EACH OUTLET.
12. PROVIDE OSP RATED CABLE FROM PULLBOX ON 341 TO PULLBOX ON 315 IN NEW UNDERGROUND CONDUIT. TRANSITION TO INDOOR RATED CABLE FOR EXTENSION IN EACH BUILDING TO INDICATED SIGNALS CLOSET. UTILIZE QUAD SHILED RG-11.

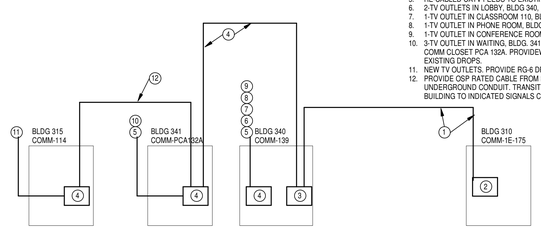

5 CATV DIAGRAM-NEW

SCALE: NONE

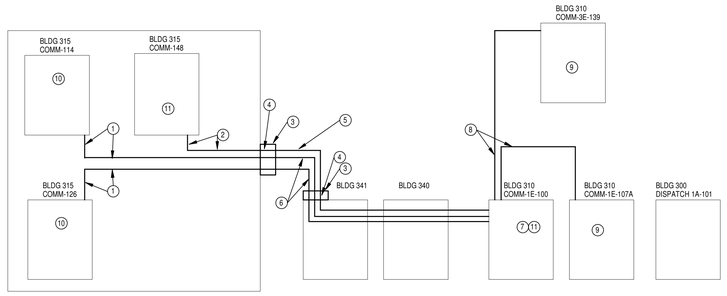

DETAIL NOTES

1. NEW 12 STRAND OM1 DUAL RATED INDOOR/OUTDOOR PLENUM, ARMORED FIBER WITH "LC" TERMINATIONS ON BOTH ENDS
2. NEW VOICE BACKBONE, 50 PAIR INCLUDING TERMINATION AT BOTH ENDS.
3. PULLBOX ON EXTERIOR OF BUILDING FOR CABLING/CONDUIT TRANSITION.
4. PROVIDE IN-LINE SPLICE FOR TRANSITION FROM UNDERGROUND OSP CABLING TO INTERIOR, PLENUM RATED CABLE.
5. PROVIDE OSP RATED CABLING IN NEW UNDERGROUND DUCTBANK. RUN COPPER CABLES IN 1-4" CONDUIT.
6. RUN FIBER CABLES IN NEW 3-CELL INNERDUCT IN 1-4" CONDUIT.
7. PROVIDE NEW FIBER TERMINATION PANEL IN EXISTING RACK AND TERMINATE NEW FIBER FEEDS IN PANEL. UTILIZE LC/LC CONNECTORS.
8. NEW 12 STRAND OM1 PLENUM ARMORED FIBER.
9. TERMINATE IN NEW WALL MOUNTED FIBER TERMINATION MPANEL IN EXISTING SIGNALS CLOSET.
10. TERMINATE IN NEW RACK MOUNTED FIBER TERMINATION PANEL IN EXISTING RACK. UTILIZE LC/LC CONNECTORS.
11. TERMINATE ON NEW WALL MOUNTED 1110 PANELS.

3 TECHNOLOGY VOICE/DATA BACKBONE DIAGRAM-NEW

SCALE: NONE

Revisions		Date
1	35% Schematic Design	03.05.2015
2	65% Design Development	04.28.2015
3	95% Owner Review	08.14.2015
4	100% Construction Documents	11.04.2015
5	Bid Set Drawings	01.15.2016

5/13/2016 11:33:42 AM

CONSULTANTS:

Heapy Engineering
MEP Design Technology Planning Commissioning Energy
Nationally Recognized Leader in Sustainability
1400 W Dorothy Lane, Dayton, OH 45409-1310
Ph 937-224-0861 Fax 937-224-5777 www.heapy.com
Heapy Project No.: 2014-04034 Firm License No.: 01528

STATE OF OHIO — GARY S. EDDICE E-52755 — REGISTERED PROFESSIONAL ENGINEER

ARCHITECT/ENGINEERS:

JOHN POE ARCHITECTS
3131 NEWMARK DRIVE, SUITE 200
MIAMISBURG, OHIO 45342
937 461 3290 PHONE
jpa@johnpoe.com

Drawing Title: TECHNOLOGY SYSTEM DETAILS

Approved: Project Director

Project Title: RELOCATE PROSTHETICS AND PODIATRY CLINICS

Location: Dayton, Ohio

Date: 05.16.2016 | Checked: NTL | Drawn: JDK

Project No. VA Project No. 552-15-502 JPA Project No. 14006.00

Building Number: 999

Drawing Number: E701

Dwg. of

Office of Construction and Facilities Management

Department of Veterans Affairs

FULLY SPRINKLERED

DETAIL NOTES

1. REMOVE EXISTING FIBER BACKBONE, 6 STRAND OM1 INCLUDING TERMINATION AT BOTH ENDS.
2. PROVIDE NEW 6 STRAND OM1 ARMORED FIBER BACKBONE INCLUDING TERMINATION INTO EXISTING CABINETS ON BOTH ENDS.
3. EXISTING CABINET TO REMAIN.
4. EXISTING CABINET TO BE REMOVED.
5. CABLING TO BE RUN IN NEW UNDERGROUND DUCTBANK FROM 341 TO 315. UTILIZE DUAL RATED INDOOR/OUTDOOR, PLENUM, ARMORED FIBER.

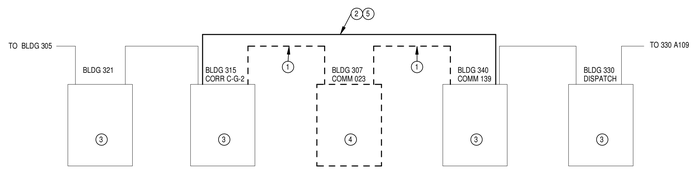

3 FIRE/SECURITY FIBER DIAGRAM
SCALE: NONE

DETAIL NOTES

1. POWER SUPPLY TO BE LOCATED WITHIN SIGNALS CLOSET.
2. EMERGENCY CIRCUIT IN WALL MOUNTED JUNCTION BOX.
3. PROVIDE 120V DIRECT CONNECTION TO PANEL.
4. EXISTING SECURITY SYSTEM NETWORK SWITCH.
5. EXTEND NEW DATA DROP (CAT 5E) FROM DEDICATED SECURITY NETWORK SWITCH INTO NEW CONTROL PANEL.
6. TYPICAL CONTROLLED DOOR DEVICES.

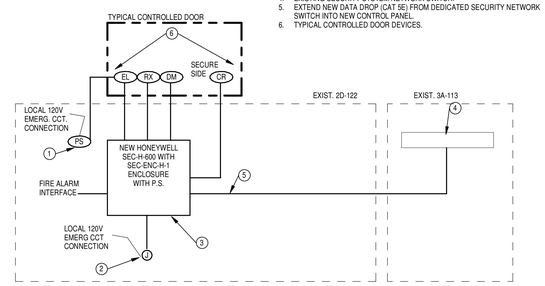

NOTE: THIS DIAGRAM IS SCHEMATIC IN NATURE ONLY. IT IS INTENDED TO SHOW GENERAL CONFIGURATION OF THE SYSTEM. REFER TO DRAWINGS AND SPECIFICATIONS FOR WORK REQUIRED.

4 ACCESS CONTROL DETAILS - BUILDING 330
SCALE: 1/8" = 1'-0"

DETAIL NOTES

1. POWER SUPPLY TO BE LOCATED WITHIN SIGNALS CLOSET.
2. EMERGENCY CIRCUIT IN WALL MOUNTED JUNCTION BOX.
3. PROVIDE 120V DIRECT CONNECTION TO PANEL.
4. EXISTING SECURITY SYSTEM NETWORK SWITCH.
5. EXTEND DATA DROP FROM DEDICATED SECURITY NETWORK SWITCH INTO NEW CONTROL PANEL.
6. TYPICAL CONTROLLED DOOR DEVICES.
7. REMOVE EXISTING SERIAL LINK TO BUILDING 307.
8. PROVIDE NEW RS-485 CONNECTION AND RE-ESTABLISH LINK TO WIRELESS PANIC BUTTONS

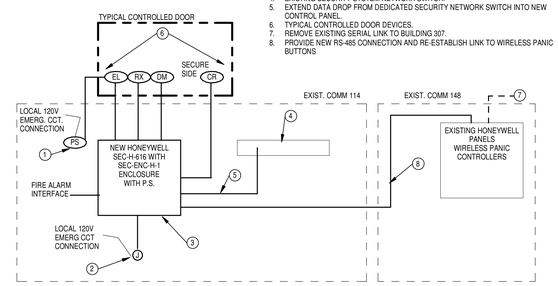

NOTE: THIS DIAGRAM IS SCHEMATIC IN NATURE ONLY. IT IS INTENDED TO SHOW GENERAL CONFIGURATION OF THE SYSTEM. REFER TO DRAWINGS AND SPECIFICATIONS FOR WORK REQUIRED.

1 ACCESS CONTROL DETAILS - BUILDING 315
SCALE: NONE

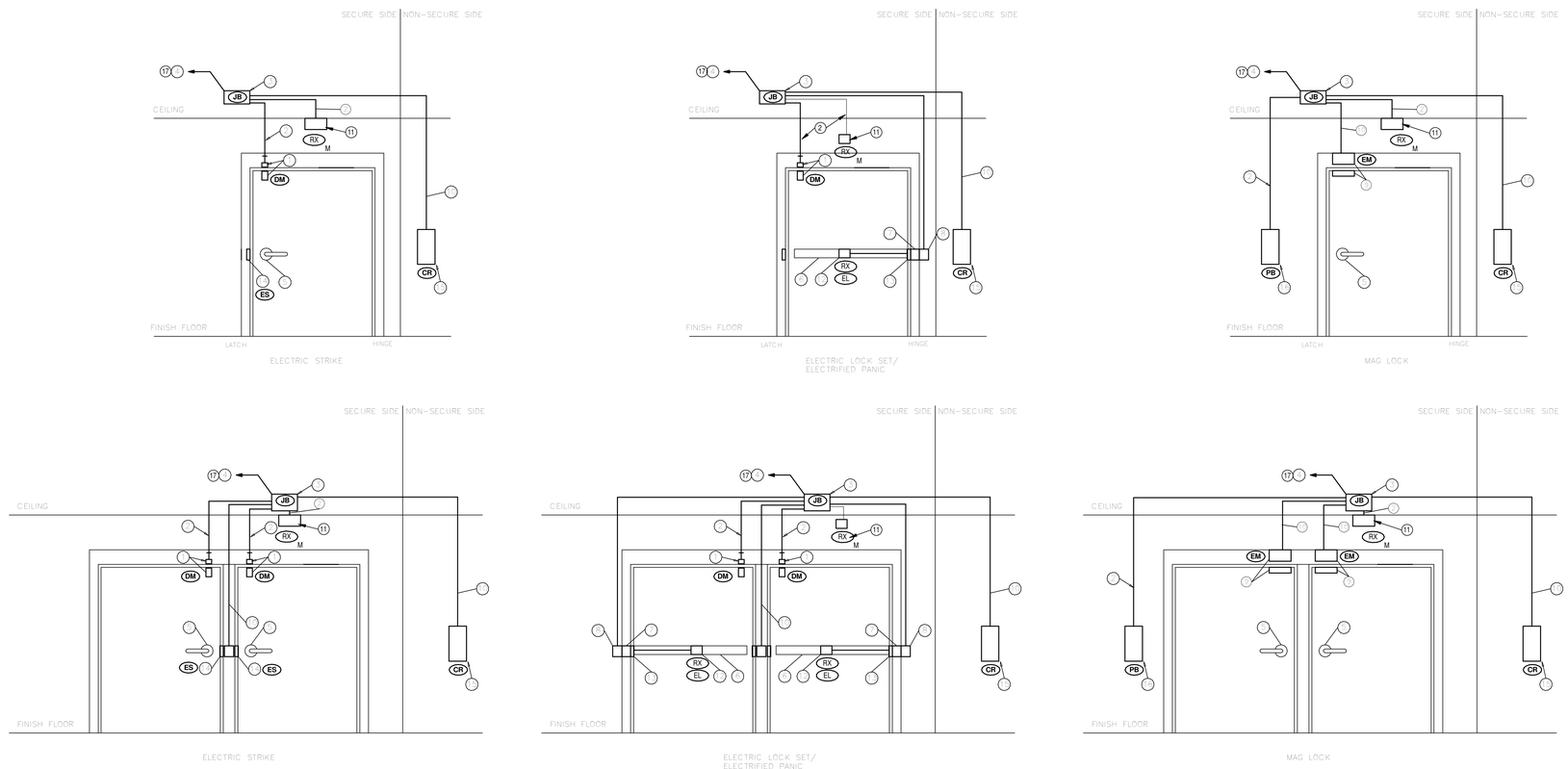

2 DOOR SECURITY DETAILS
SCALE: NONE

DOOR ROUGH-IN DETAIL NOTES

1. DPDT DOOR POSITION SWITCH WITH WIRING TO SECURITY CONTROL PANELS.
2. PROVIDE 0.5" CONDUIT FROM DOOR FRAME TO LOCAL SECURITY WIRING JUNCTION BOX ABOVE SECURE SIDE CEILING.
3. LOCAL SECURITY JUNCTION BOX ABOVE CEILING ON SECURE SIDE OF DOOR, MINIMUM 12"X12"X4" WITH CONDUIT CONNECTIONS TO DOOR/READERS/ETC. AND WIRING AS REQUIRED.
4. EXTEND DOOR CONTROL AND LOW VOLTAGE LOCK POWER WIRING TO DOOR CONTROL EQUIPMENT.
5. MECHANICAL DOOR HARDWARE BY OTHERS.
6. ELECTRIC DOOR HARDWARE BY OTHERS.
7. MORTISE BOX IN DOOR FRAME BY OTHERS.
8. PROVIDE WALL MOUNTED JUNCTION BOX AT DOOR FRAME CONNECTION POINT. COORDINATE WITH DOOR FRAME PRIOR TO INSTALLATION.
9. ELECTROMAGNETIC DOOR LOCK WITH BONDING SENSOR FOR DOOR POSITION (BY OTHERS.).
10. PROVIDE 0.75" CONDUIT FROM DOOR FRAME TO LOCAL SECURITY JUNCTION BOX WITH WIRING.
11. REQUEST TO EXIT PIR MOTION DETECTOR ON SECURE SIDE OF DOOR FOR DOOR ALARM SHUNT. PROVIDE WALL/CEILING MOUNT AS REQUIRED.
12. REQUEST TO EXIT ALARM SHUNT SWITCH INTEGRAL WITH DOOR HARDWRE.
13. POWER TRANSFER UNIT/ELECTRIFIED HINGE BY OTHERS. PROVIDE LOW VOLTAGE CONNECTION AND WIRING.
14. ELECTRIC STRIKE UNIT BY OTHERS. PROVIDE LOW VOLTAGE CONNECTION AND WIRING.
15. WALL MOUNTED CREDENTIAL READER WITH BOX AND CONDUIT, LOCATED ON NON-SECURE SIDE OF DOOR, 46"MH. REFER TO PLANS FOR LOCATIONS.
16. WALL MOUNTED REQUEST TO EXIT PUSHBUTTON WITH BOX AND CONDUIT, LOCATED ON SECURE SIDE OF DOOR, 46"MH. REFER TO PLANS FOR LOCATIONS.
17. LOCK POWER SUPPLY. FURNISHED BY OTHERS, INSTALLED IN LOCAL SIGNALS CLOSET, CONNECTED AND WIRED TO REMOTELY POWER LOCK.

DOOR ROUGH-IN GENERAL NOTES

A. THESE DETAILS ARE DIAGRAMATIC IN NATURE AND ARE INTENDED TO CONVEY THE GENERAL REQUIREMENTS FOR A VARIETY OF DOOR APPLICATIONS. REFER TO DRAWINGS FOR SPECIFIC DEVICES TO BE INSTALLED AT SPECIFIC DOORS.
B. FIELD VERIFY THE FINAL LOCATIONS OF ALL DOOR SECURITY EQUIPMENT AND CONDUIT CONNECTIONS WITH DOOR FRAME/HARDWARE CONTRACTORS PRIOR TO INSTALLATION.

Revisions		Date
1	35% Schematic Design	03.05.2015
2	65% Design Development	04.28.2015
3	95% Owner Review	08.14.2015
4	100% Construction Documents	11.04.2015
5	Bid Set Drawings	01.15.2016

CONSULTANTS:
Heapy Engineering
MEP Design Technology Planning Commissioning Energy
Nationally Recognized Leader in Sustainability
1400 W Dorothy Lane, Dayton, OH 45409-1310
Ph 937-224-0861 Fax 937-224-5777 www.heapy.com
Heapy Project No.: 2014-04034 Firm License No.: 01528

STATE OF OHIO GARY S. EODICE E-52755 REGISTERED PROFESSIONAL ENGINEER

ARCHITECT/ENGINEERS:
JOHN POE ARCHITECTS
3131 NEWMARK DRIVE, SUITE 200
MIAMISBURG, OHIO 45342
937 461 3290 PHONE
jpa@johnpoe.com

Drawing Title: SECURITY SYSTEM DETAILS

Approved: Project Director

Project Title: RELOCATE PROSTHETICS AND PODIATRY CLINICS

Location: Dayton, Ohio

Date: 05.16.2016 | Checked: NTL | Drawn: JDK

Project No. VA Project No. 552-15-502 JPA Project No. 14006.00

Building Number: 999

Drawing Number: E702 Dwg. of

Office of Construction and Facilities Management

Department of Veterans Affairs

5/13/2016 11:33:46 AM

FULLY SPRINKLERED

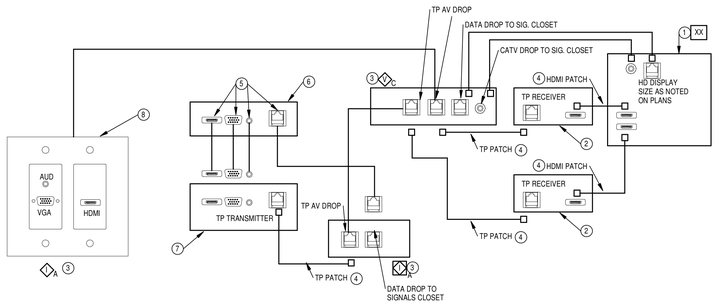

DETAIL NOTES

1. PROVIDE WAL MOUNTED HD TV WITH REQUIRED MOUNTING HARDWARE, SURGE PROTECTOR AND ALL AV CONNECTING CABLES.
2. PROVIDE TWISTED PAIR AV RECEIVER, WITH REQUIRED MOUNTING HARDWARE TO MOUNT BEHIND DISPLAY, AND ALL CONNECTING CABLES TO BE MOUNTED BEHIND TV.
3. AV OUTLET, REFER TO OUTLET DETAILS, SHEET E702.
4. PROVIDE AV CONNECTING CABLES. LENGTH TO BE AS REQUIRED FOR NEAT AND PROFESSIONAL INSTALLATION . PROVIDE CABLE MANAGEMENT AROUND ALL CABLE BUNDLES TO CONTAIN CORDAGE INTO A SINGLE BUNDLE FOR AV (BUNDLE POWER CORDS SEPARATELY).
5. PROVIDE CONECTORIZED PATCH CABLES WITH CAPTIVE END IN TABLE BOX. CONNECT TO OUTLETS IN AV TRANSMITTER MOUNTED UNDER TABLE..
6. PROVIDE CUT-IN TABLE TOP BOX WITH DUPLEX POWER SECTION AND CAPTIVE CABLE HOLDERS FOR HDMI, VGA, 3.5MM AUDIO AND NETWORK LAN. COORDINATE TABLE INSTALLATION WITH FURNITURE SUPPLIER.
7. PROVIDE TWISTED PAIR AV TRANSMITTER, MULTI-FORMAT INPUT (HDMI, VGA) WITH REQUIRED MOUNTING HARDWARE TO MOUNT UNDER TABLE, AND ALL CONNECTING CABLES.
8. PROVIDE TWISTED PAIR, MULTIFORMAT AV TRANSMITTER IN RECESSED WALL BOX.

3 BUILDING 315 - ROOM 220g

SCALE: 1/8" = 1'-0"

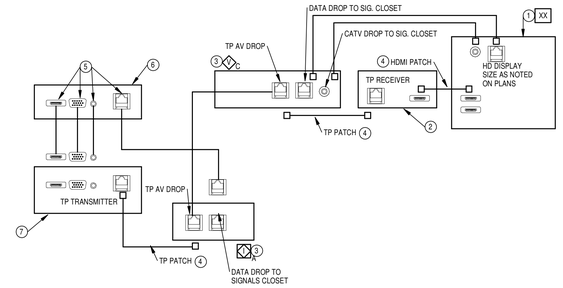

DETAIL NOTES

1. PROVIDE WAL MOUNTED HD TV WITH REQUIRED MOUNTING HARDWARE, SURGE PROTECTOR AND ALL AV CONNECTING CABLES.
2. PROVIDE TWISTED PAIR AV RECEIVER, WITH REQUIRED MOUNTING HARDWARE TO MOUNT BEHIND DISPLAY, AND ALL CONNECTING CABLES TO BE MOUNTED BEHIND TV.
3. AV OUTLET, REFER TO OUTLET DETAILS, SHEET E702.
4. PROVIDE AV CONNECTING CABLES. LENGTH TO BE AS REQUIRED FOR NEAT AND PROFESSIONAL INSTALLATION . PROVIDE CABLE MANAGEMENT AROUND ALL CABLE BUNDLES TO CONTAIN CORDAGE INTO A SINGLE BUNDLE FOR AV (BUNDLE POWER CORDS SEPARATELY).
5. PROVIDE CONECTORIZED PATCH CABLES WITH CAPTIVE END IN TABLE BOX. CONNECT TO OUTLETS IN AV TRANSMITTER MOUNTED UNDER TABLE..
6. PROVIDE CUT-IN TABLE TOP BOX WITH DUPLEX POWER SECTION AND CAPTIVE CABLE HOLDERS FOR HDMI, VGA, 3.5MM AUDIO AND NETWORK LAN. COORDINATE TABLE INSTALLATION WITH FURNITURE SUPPLIER.
7. PROVIDE TWISTED PAIR AV TRANSMITTER, MULTI-FORMAT INPUT (HDMI, VGA) WITH REQUIRED MOUNTING HARDWARE TO MOUNT UNDER TABLE, AND ALL CONNECTING CABLES.

1 BUILDING 330 - ROOM 2D-135

SCALE: 1/8" = 1'-0"

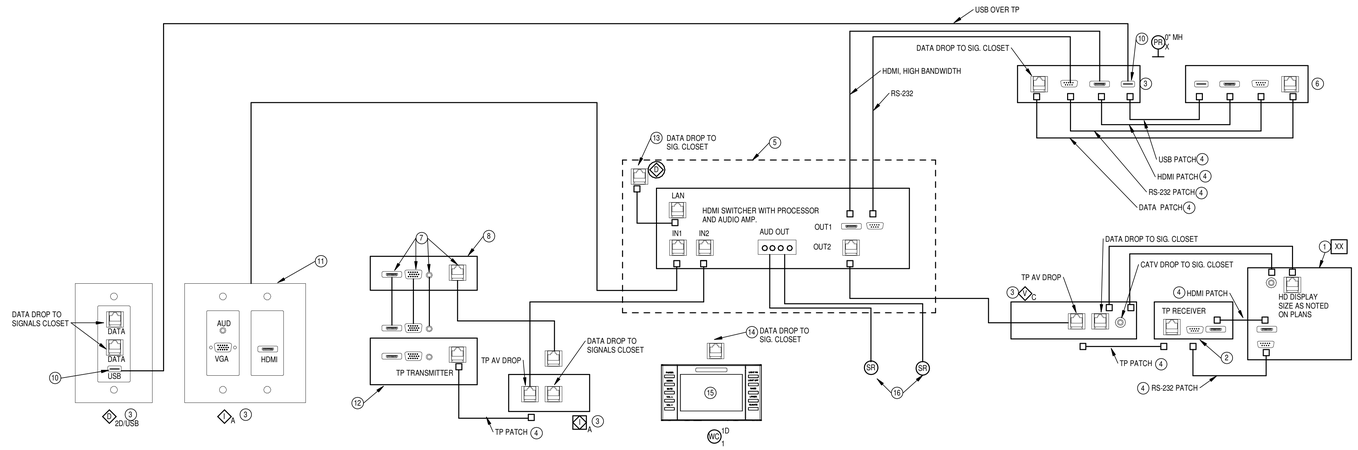

DETAIL NOTES

1. PROVIDE WAL MOUNTED HD TV WITH REQUIRED MOUNTING HARDWARE, SURGE PROTECTOR AND ALL AV CONNECTING CABLES.
2. PROVIDE TWISTED PAIR AV RECEIVER, WITH REQUIRED MOUNTING HARDWARE TO MOUNT BEHIND DISPLAY, AND ALL CONNECTING CABLES TO BE MOUNTED BEHIND TV.
3. AV OUTLET, REFER TO OUTLET DETAILS, SHEET E702.
4. PROVIDE AV CONNECTING CABLES. LENGTH TO BE AS REQUIRED FOR NEAT AND PROFESSIONAL INSTALLATION . PROVIDE CABLE MANAGEMENT AROUND ALL CABLE BUNDLES TO CONTAIN CORDAGE INTO A SINGLE BUNDLE FOR AV (BUNDLE POWER CORDS SEPARATELY).
5. PROVIDE CEILING AV ENCLOSURE (FSR #CB-224S) FOR AV EQUIPMENT.
6. WALL MOUNTED, ULTRA SHORT THROW, INTERACTIVE PROJECTOR, EPSON BRIGHTLINK 485WI WITH WALL MOUNT, INTERACTIVE PEN, ALL REQUIRED PATCH CABLES, AND WIRELESS LAN OPTION.
7. PROVIDE CONECTORIZED PATCH CABLES WITH CAPTIVE END IN TABLE BOX. CONNECT TO OUTLETS IN AV TRANSMITTER MOUNTED UNDER TABLE..
8. PROVIDE CUT-IN TABLE TOP BOX WITH DUPLEX POWER SECTION AND CAPTIVE CABLE HOLDERS FOR HDMI, VGA, 3.5MM AUDIO AND NETWORK LAN. COORDINATE TABLE INSTALLATION WITH FURNITURE SUPPLIER.
9. PROVIDE TWISTED PAIR AV TRANSMITTER, MULTI-FORMAT INPUT (HDMI, VGA) WITH REQUIRED MOUNTING HARDWARE TO MOUNT UNDER TABLE, AND ALL CONNECTING CABLES.
10. PROVIDE USB OVER TWISTED PAIR TX/RX CONNECTORS.
11. PROVIDE TWISTED PAIR, MULTIFORMAT AV TRANSMITTER IN RECESSED WALL BOX.
12. PROVIDE TWISTED PAIR AV TRANSMITTER, MULTI-FORMAT INPUT (HDMI, VGA) WITH REQUIRED MOUNTING HARDWARE TO MOUNT UNDER TABLE, AND ALL CONNECTING CABLES.
13. PROVIDE DATA DROP IN CEILING AV ENCLOSURE.
14. PROVIDE DATA DROP AT LOCATION OF WALL AV CONTROL PANEL.
15. WALL MOUNTED 5" COLOR TOUCH PANEL FOR ROOM SYSTEM CONTRNOL WITH LAN CONNECTIVITY BACK TO ROOM CONTROLLER/SWITCHER/PROCESSOR.
16. FLUSH CEILING MOUNTED, 8 OHM HIGH FIDELITY SPEAKERS.

2 BUILDING 330 - ROOM 2D-117

SCALE: 1/8" = 1'-0"

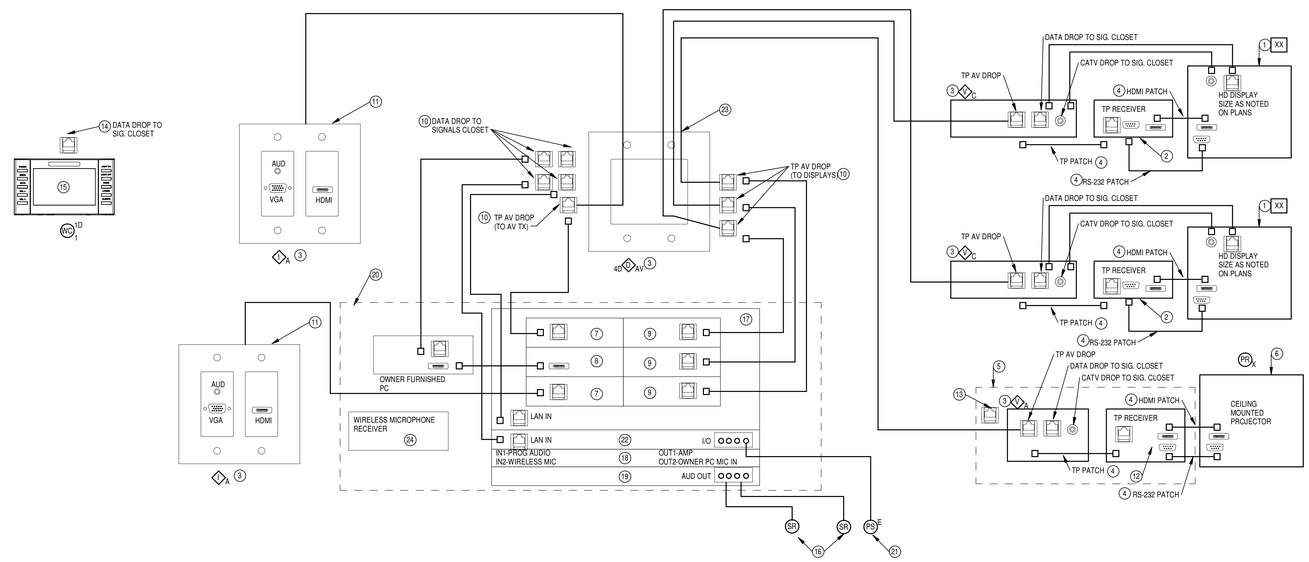

DETAIL NOTES

1. PROVIDE WAL MOUNTED HD TV WITH REQUIRED MOUNTING HARDWARE, SURGE PROTECTOR AND ALL AV CONNECTING CABLES.
2. PROVIDE TWISTED PAIR AV RECEIVER/SCALER, WITH REQUIRED MOUNTING HARDWARE TO MOUNT BEHIND TV, AND ALL CONNECTING CABLES TO BE MOUNTED BEHIND TV.
3. AV OUTLET, REFER TO OUTLET DETAILS, SHEET E702.
4. PROVIDE AV CONNECTING CABLES. LENGTH TO BE AS REQUIRED FOR NEAT AND PROFESSIONAL INSTALLATION . PROVIDE CABLE MANAGEMENT AROUND ALL CABLE BUNDLES TO CONTAIN CORDAGE INTO A SINGLE BUNDLE FOR AV (BUNDLE POWER CORDS SEPARATELY).
5. PROVIDE CEILING AV ENCLOSURE (FSR #CB-224S) FOR AV EQUIPMENT.
6. CEILING MOUNTED, PROJECTOR, EPSON POWERLITE 1985WU WITH CEILING WALL MOUNT, ALL REQUIRED PATCH CABLES, AND WIRELESS LAN OPTION.
7. AV INPUT CARD FOR MODULAR AV MATRIX SWITCHER, TP INPUT.
8. AV INPUT CARD FOR MODULAR AV MATRIX SWITCHER, HDMI INPUT.
9. AV OUTPUT CARD FOR MODULAR AV MATRIX SWITCHER, TP OUTPUT.
10. PROVIDE FEMALE JACK TERMINATIONS AT END OF CALBE EXTENDED INTO EQUIPMENT CABINET FOR CONNECTIVITY TO AV SYSTEM.
11. PROVIDE TWISTED PAIR, MULTIFORMAT AV TRANSMITTER IN RECESSED WALL BOX.
12. PROVIDE TWISTED PAIR AV RECEIVER/SCALER, WITH REQUIRED MOUNTING IN CEILING CABINET, AND ALL CONNECTING CABLES.
13. PROVIDE DATA DROP IN CEILING AV ENCLOSURE.
14. PROVIDE DATA DROP AT LOCATION OF WALL AV CONTROL PANEL.
15. WALL MOUNTED 5" NOMINAL COLOR TOUCH PANEL FOR ROOM SYSTEM CONTRNOL WITH LAN CONNECTIVITY BACK TO ROOM CONTROLLER/SWITCHER/PROCESSOR.
16. FLUSH CEILING MOUNTED, 8 OHM HIGH FIDELITY SPEAKERS. REFER TO PLANS FOR QUANTITY.
17. AV SYSTEM MODULAR HDMI MATRIX SWITCHER.
18. AUDIO SYSTEM DSP.
19. AUDIO SYSTEM AMPLIFIER.
20. 14RU EQUIPMENT RACK IN AV CREDENZA WITH ALL REQUIRED POWER SUPPLY (UTILIZE SEQUNCING POWER STRIP) AND THEMOSTATICALLY CONTROLLED TOP VENTILATION FAN. PROVIDE RACK COMPLETE WITH BLANK OFF PANELS, MOUNTING HARDWARE FOR BASE CABINET INSTLLATION, AND NECESSARY RACK HARDWARE AND SHELVES.
21. CEILING MOUNTED ELECTRIC PROJECTION SCREEN BY OTHERS., PROVIDE LOW VOLTAGE CONTROL FROM AV CONTROL SYSTEM.
22. AV SYSTEM ROOM CONTROLLER WITH I/O, RS-232, AND IR PORTS AS REQUIRED FOR FULL SYSTEM CONTROL, LINK TO DSP, AMPLIFIER, AV SWITCHER, FLAT PANEL MONITORS, PROJECTOR AND WALL TOUCH PANEL.
23. PROVIDE 2-GANG EMPTY BOX WITH 2-1" CONDUITS FOR AV AND DATA CABLING.
24. PROVIDE RACK MOUNTED WIRELESS MICROPHONE RECEIVER AND CONNECT TO AV SYSTEM AUDIO DSP.

4 BUILDING 315 - ROOM 221

SCALE: 1/8" = 1'-0"

Revisions		Date
1	35% Schematic Design	03.05.2015
2	65% Design Development	04.28.2015
3	95% Owner Review	08.14.2015
4	100% Construction Documents	11.04.2015
5	Bid Set Drawings	01.15.2016

CONSULTANTS:

Heapy Engineering
MEP Design Technology Planning Commissioning Energy
Nationally Recognized Leader in Sustainability
1400 W Dorothy Lane, Dayton, OH 45409-1310
Ph 937-224-0861 Fax 937-224-5777 www.heapy.com
Heapy Project No.: 2014-04034 Firm License No.: 01528

STATE OF OHIO — GARY S. EODICE E-52755 — REGISTERED PROFESSIONAL ENGINEER

ARCHITECT/ENGINEERS:

JOHN POE ARCHITECTS
3131 NEWMARK DRIVE, SUITE 200
MIAMISBURG, OHIO 45342
937 461 3290 PHONE
jpa@johnpoe.com

Drawing Title: AV SYSTEM DETAILS

Approved: Project Director

Project Title: RELOCATE PROSTHETICS AND PODIATRY CLINICS

Location: Dayton, Ohio

Date: 05.16.2016 | Checked: MSG | Drawn: JDK

Project No. VA Project No. 552-15-502 JPA Project No. 14006.00

Building Number: 999

Drawing Number: E703

Dwg. of

Office of Construction and Facilities Management
Department of Veterans Affairs

5/13/2016 11:33:54 AM