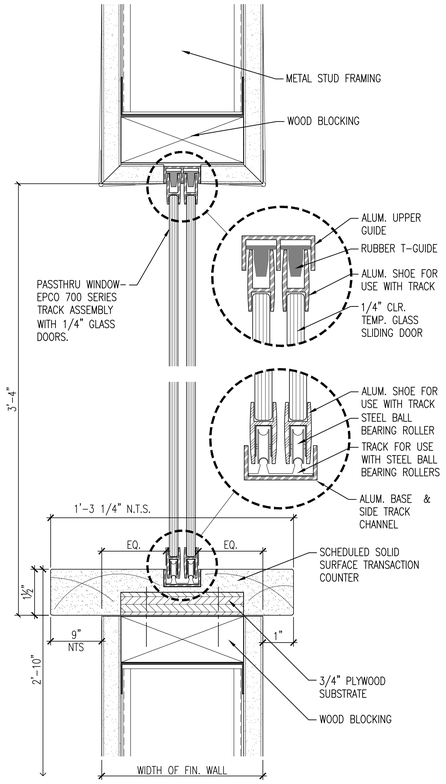

10 A509 SECTION – PASSTHRU WINDOW
6" = 1'-0"

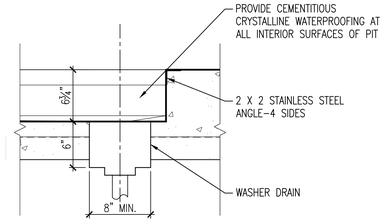

8 A509 CART WASH PIT SECTION
1 1/2" = 1'-0"

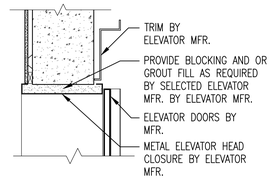

5 A509 ELEVATOR HEAD DETAIL
1" = 1'-0"

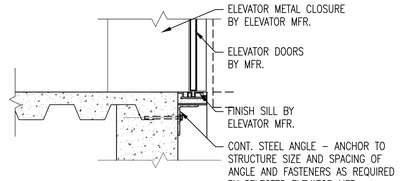

4 A509 ELEVATOR SILL DETAIL
1" = 1'-0"

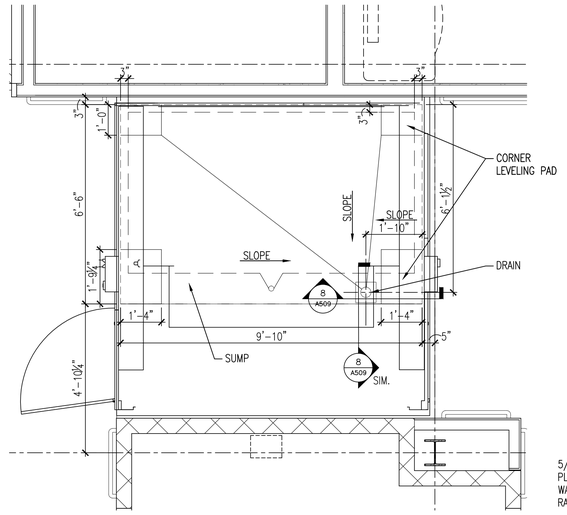

7 A509 CART WASH PIT PLAN
1/2" = 1'-0"

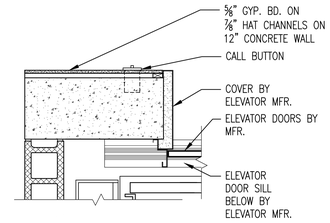

3 A509 ELEVATOR JAMB DETAIL
1" = 1'-0"

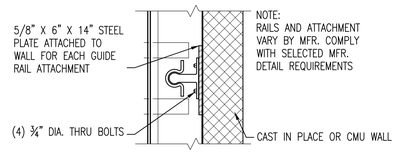

2 A509 ELEVATOR RAIL DETAIL
1" = 1'-0"

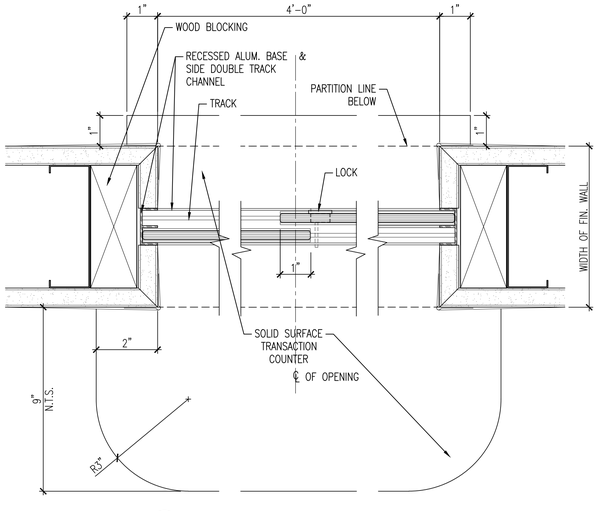

9 A509 PLAN DETAIL – PASSTHRU WINDOW
6" = 1'-0"

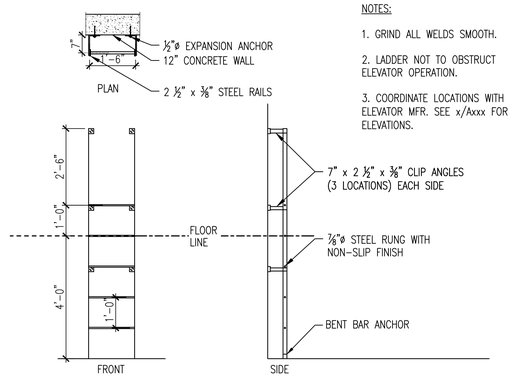

NOTES:

1. GRIND ALL WELDS SMOOTH.
2. LADDER NOT TO OBSTRUCT ELEVATOR OPERATION.
3. COORDINATE LOCATIONS WITH ELEVATOR MFR. SEE x/Axxx FOR ELEVATIONS.

6 A509 LADDER ELEVATIONS
1/2" = 1'-0"

FINAL SUBMITTAL

Revisions:	Date

CONSULTANTS:

ALAN J. TOLAND REG. NO. 6788 STATE OF LOUISIANA REGISTERED ARCHITECT

ARCHITECT:
TOLAND MIZELL MOLNAR
590 Means Street NW, Suite 200
Atlanta, GA 30318
404.214.9774

Drawing Title: ELEVATOR DETAILS, CART WASH PIT DETAILS AND PASSTHRU WINDOW

Approved: Project Director

Project Title: EXPAND RADIOLOGY AND SPS OVERTON BROOKS VAMC

Location: SHREVEPORT, LA

Date: 04-17-2015 | Checked: XX | Drawn: XX

Project Number: 667-083

Building Number: 1

Drawing Number: A509

Dwg. 49 of 160

OFFICE OF CONSTRUCTION AND FACILITIES MANAGEMENT

VA U.S. Department of Veterans Affairs

VA FORM 08-6231A, MAR 1984

Drawing File: T:\Projects\1313 Renovate Radiology & SPS VA Shreveport\3 1313 Drawings\RENOVATE RADIOLOGY & SPS – VA SHREVEPORT\Sheets\A509 ELEVATOR DETAILS, CART WASH PIT DETAILS AND PASSTHRU WINDOW.dwg
Plotted By: Thomas Fox
Plotted Date: May 20, 2015 – 4:01pm