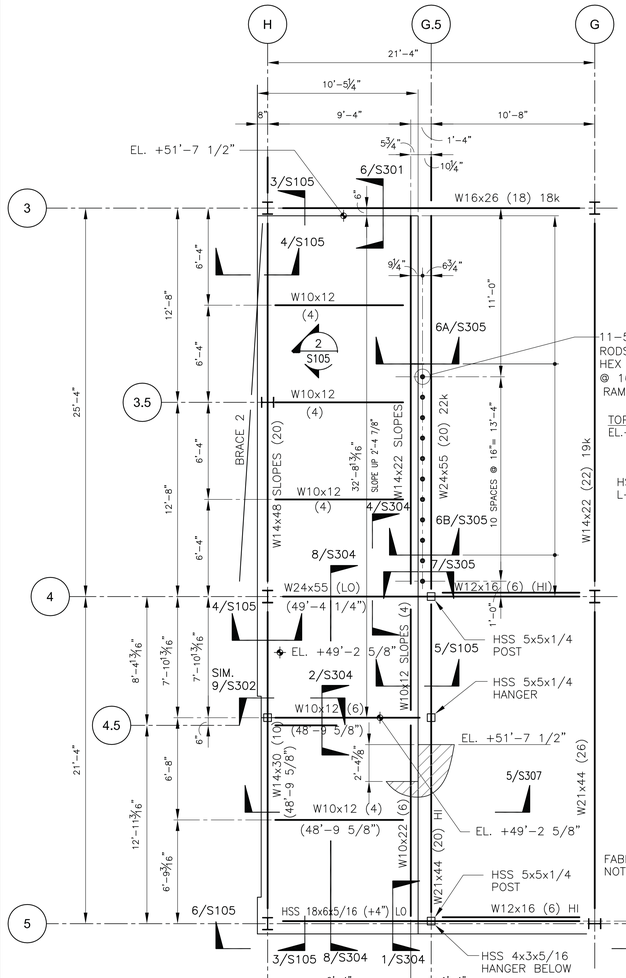

ENLARGED PLAN AT RAMP 1/S105
1/4"=1'-0'

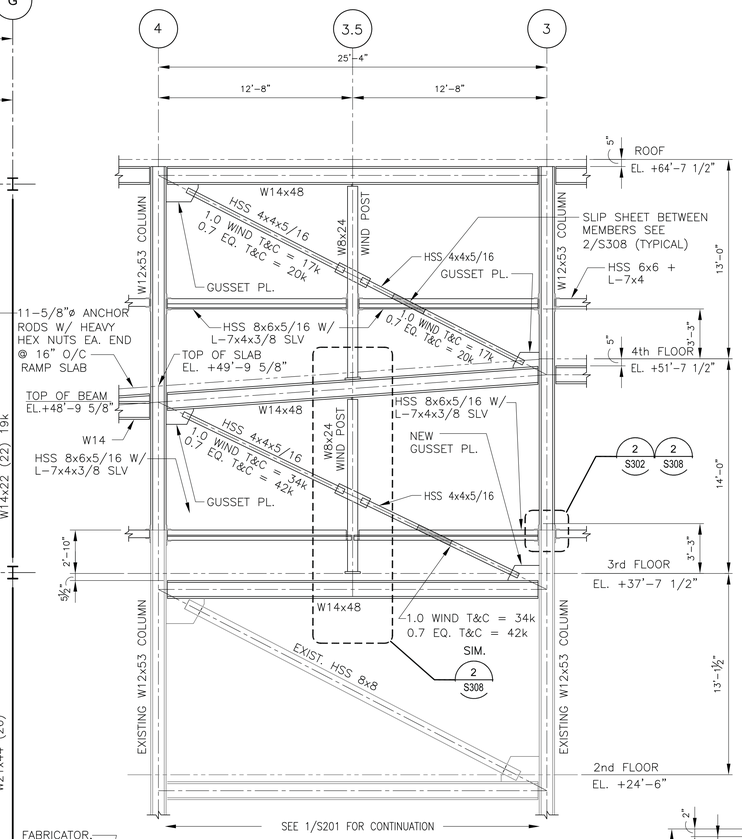

BRACE 2

BRACING ELEVATION AT LINE H 2/S105
1/4"=1'-0"

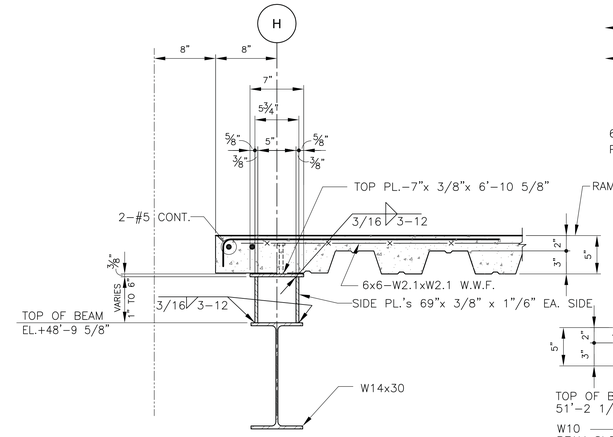

SECTION 4/S105
1 1/2"=1'-0"

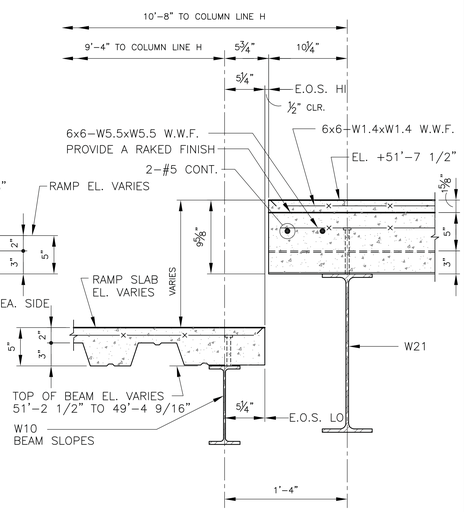

SECTION 5/S105
1 1/2"=1'-0"

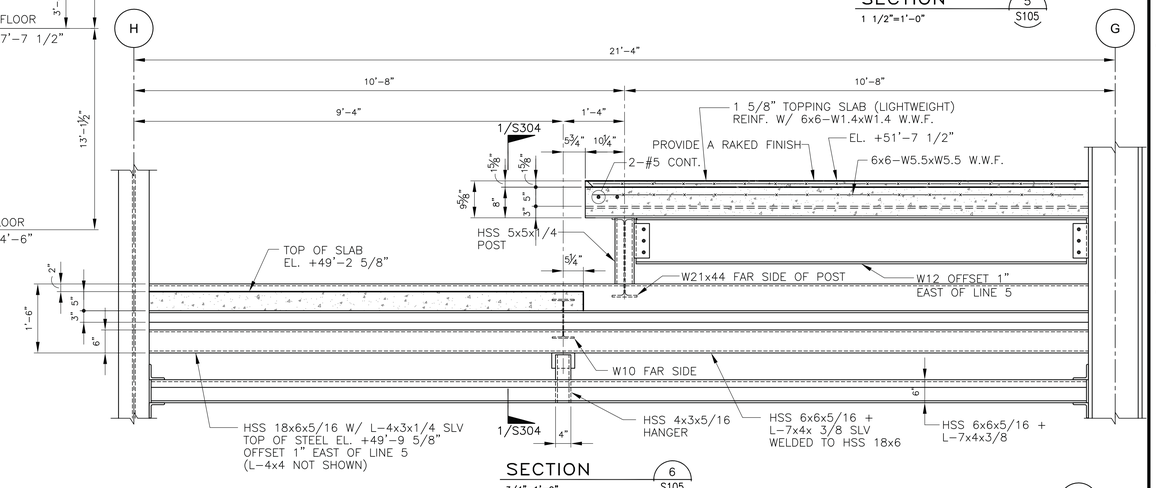

SECTION 6/S105
3/4"=1'-0"

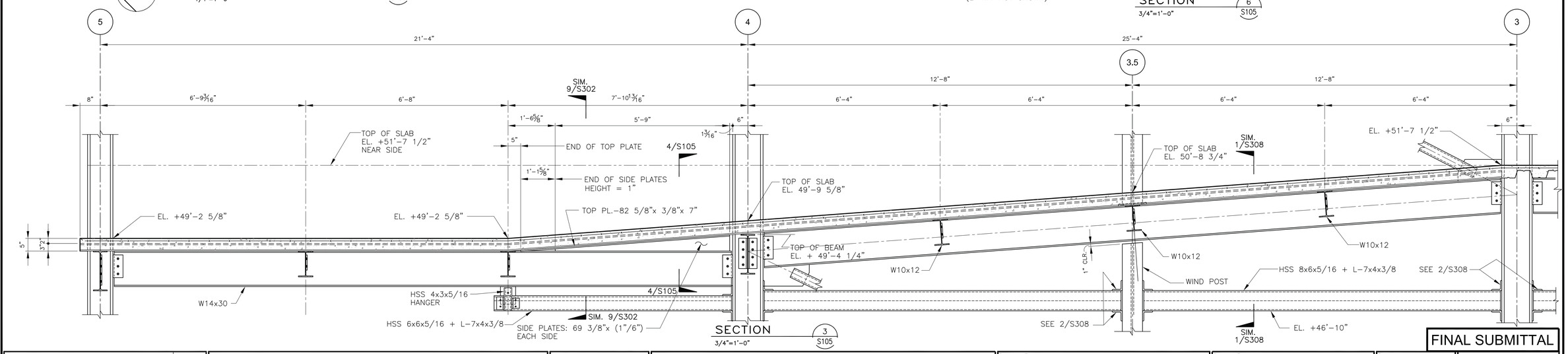

SECTION 3/S105
3/4"=1'-0"

Revisions:	Date

CONSULTANTS:

PADGETT Engineering Group
Consulting Structural Engineers
2255 CUMBERLAND PARKWAY - SUITE 1910 - ATLANTA - GEORGIA 30339

STATE OF LOUISIANA — ROBERT C. PADGETT — Licence No. 28620 — PROFESSIONAL ENGINEER — 3/11/15
LOUISIANA C.O.A 4674

ARCHITECT:
TOLAND MIZELL MOLNAR
590 Means Street NW, Suite 200
Atlanta, GA 30318
404.214.9774

Drawing Title: ENLARGED PLAN & DETAILS

Approved: Project Director

Project Title: EXPAND RADIOLOGY AND SPS OVERTON BROOKS VAMC

Location: SHREVEPORT, LA

Date: 3-13-2015 | Checked: BP | Drawn: AH

Project Number: 667-083

Building Number: 1

Drawing Number: S105 Dwg. of XX

FINAL SUBMITTAL

OFFICE OF CONSTRUCTION AND FACILITIES MANAGEMENT

VA — U.S. Department of Veterans Affairs

VA FORM 08-6231A, MAR 1984

Drawing File: W:\2 Clients-Projects\2-Toland-Mizell-Molnar\2014-012 VA SHREVEPORT-EXPAND RADIOLOGY\DRAWINGS\STRUCT\S105 ENLARGED PLAN & DETAILS.dwg
Plotted by: ashby
Plotted Date: Mar 11, 2015 - 7:12pm