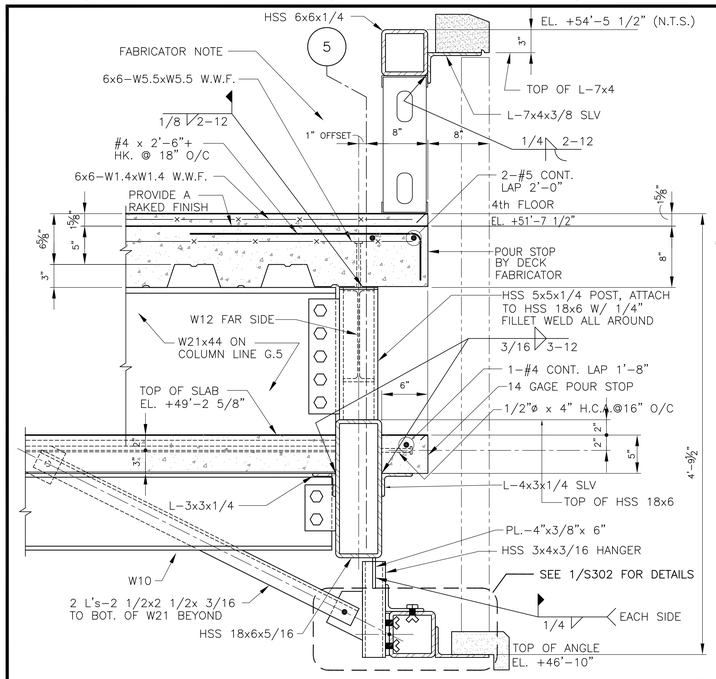

SECTION 1 (S304) — 1 1/2"=1'-0"

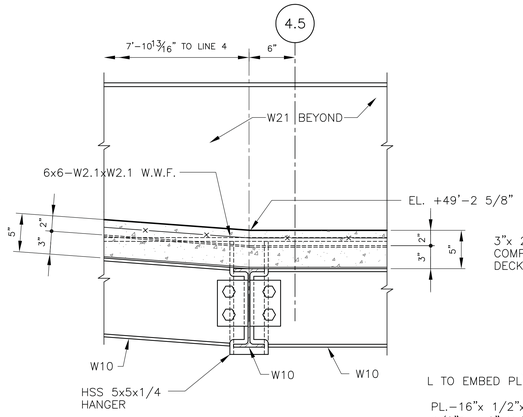

SECTION 2 (S304) — 1 1/2"=1'-0"

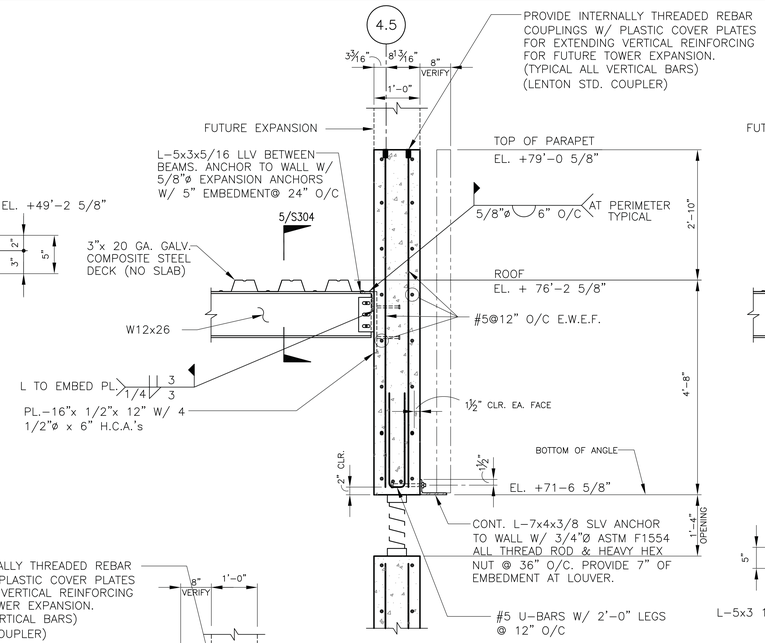

SECTION 3 (S304) — 3/4"=1'-0"

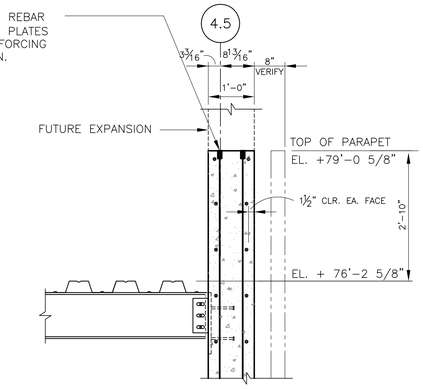

SECTION 3A (S304) — 3/4"=1'-0"

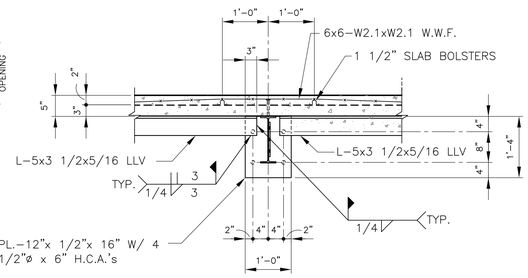

SECTION 5 (S304) — 3/4"=1'-0"

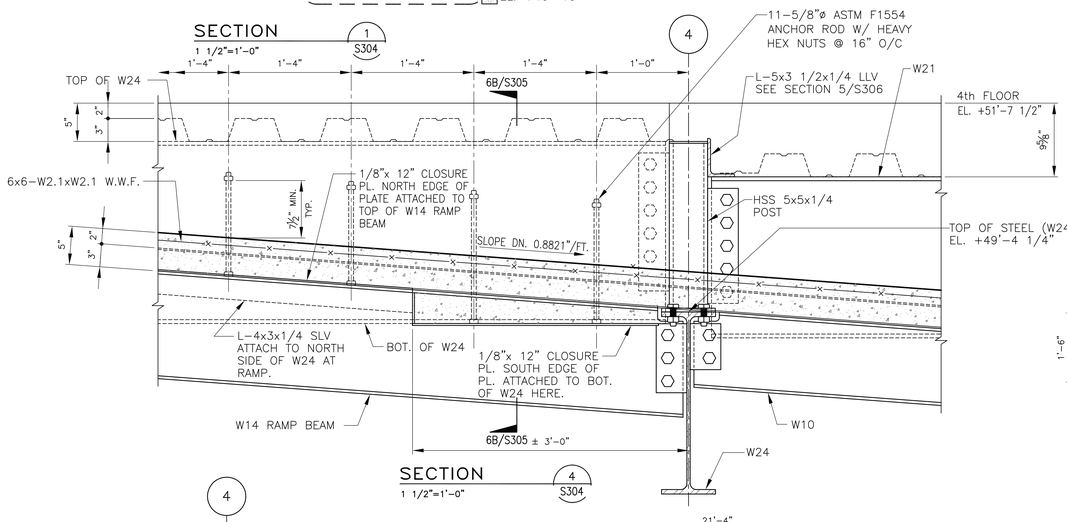

SECTION 4 (S304) — 1 1/2"=1'-0"

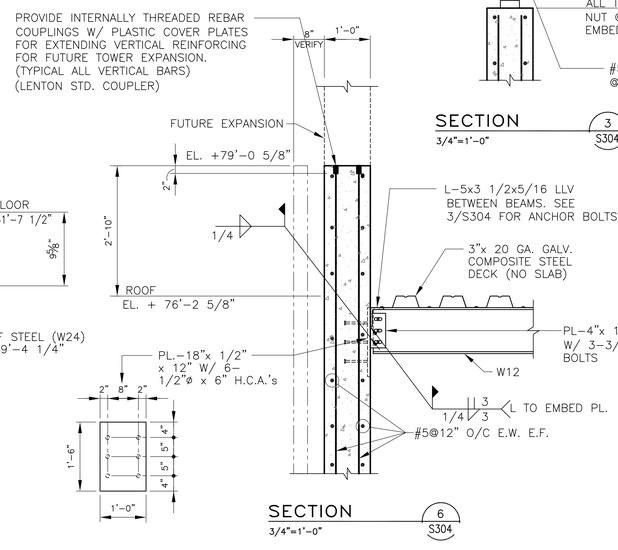

SECTION 6 (S304) — 3/4"=1'-0"

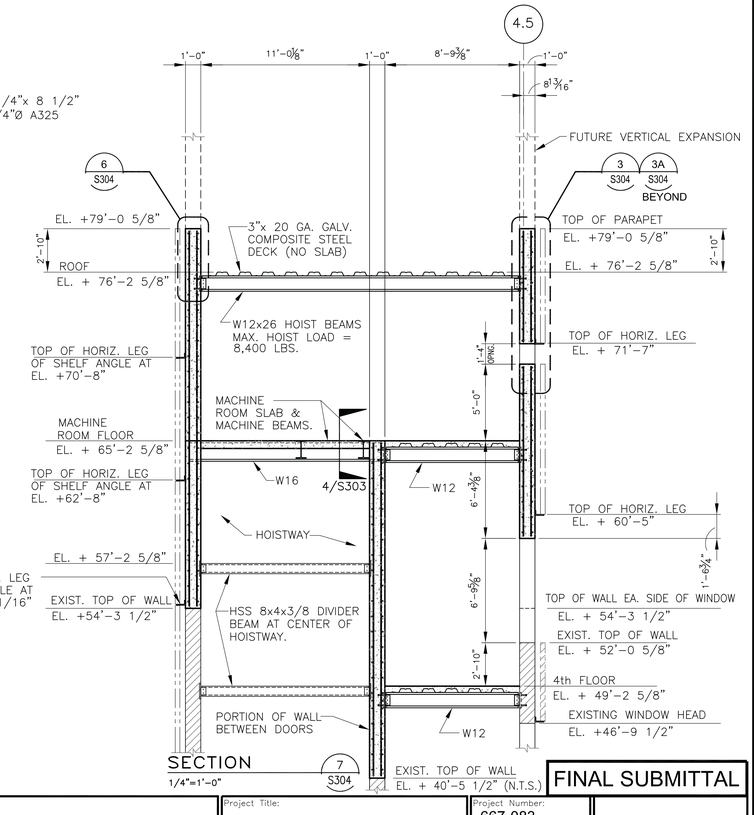

SECTION 7 (S304) — 1/4"=1'-0"

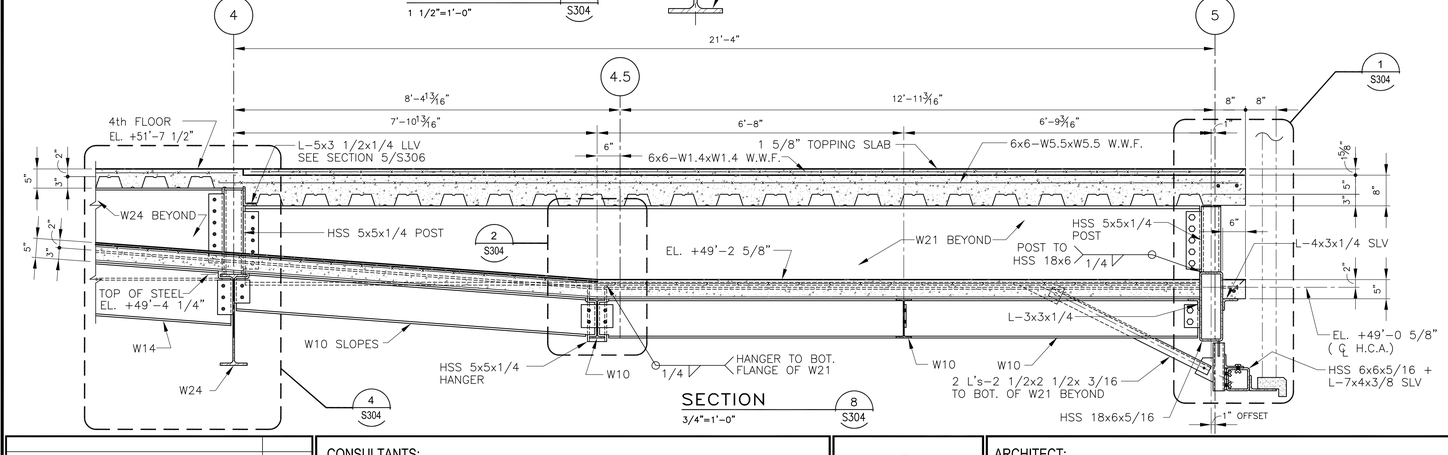

SECTION 8 (S304) — 3/4"=1'-0"

Revisions:	Date

CONSULTANTS:

PADGETT Engineering Group
Consulting Structural Engineers
2255 CUMBERLAND PARKWAY - SUITE 1910 - ATLANTA - GEORGIA 30339

STATE OF LOUISIANA — ROBERT C. PADGETT — LICENSE No. 28423 — PROFESSIONAL ENGINEER — 3/11/15
LOUISIANA C.O.A 4674

ARCHITECT:
TOLAND MIZELL MOLNAR
590 Means Street NW, Suite 200
Atlanta, GA 30318
404.214.9774

Drawing Title: SECTIONS & DETAILS
Approved: Project Director

Project Title: EXPAND RADIOLOGY AND SPS OVERTON BROOKS VAMC
Location: SHREVEPORT, LA
Date: 3-13-2015 | Checked: BP | Drawn: AH

Project Number: 667-083
Building Number: 1
Drawing Number: S304
Dwg. of XX

FINAL SUBMITTAL

OFFICE OF CONSTRUCTION AND FACILITIES MANAGEMENT
VA — U.S. Department of Veterans Affairs

VA FORM 08-6231A, MAR 1984

Drawing File: W:\2 Clients-Projects\2-Toland-Mizell-Molnar\2014-012 VA SHREVEPORT-EXPAND RADIOLOGY\DRAWINGS\STRUC\S304.dwg
Plotted by: ashby
Plotted Date: Mar 12, 2015 - 9:10am